Tarifa 2026

Recambios



Roca

Tarifa 2026

Recambios

Precios de venta al público sugeridos

Enero 2026

Roca

Guía de búsqueda / Search guide

Búsqueda manual por serie / Manual search for collections

1. Identificar producto y serie a la que pertenece el recambio, ayudándose del índice del documento. / Identify the product and collection of spare part with index help.
2. Identificar el recambio en el dibujo explosionado. / Identify spare part in exploded drawing
3. Examinar la tabla de recambios para encontrar la referencia correcta (en caso necesario, aplicar la terminación del acabado). / Examine the spare parts table to find the correct reference (if needed apply finished code).

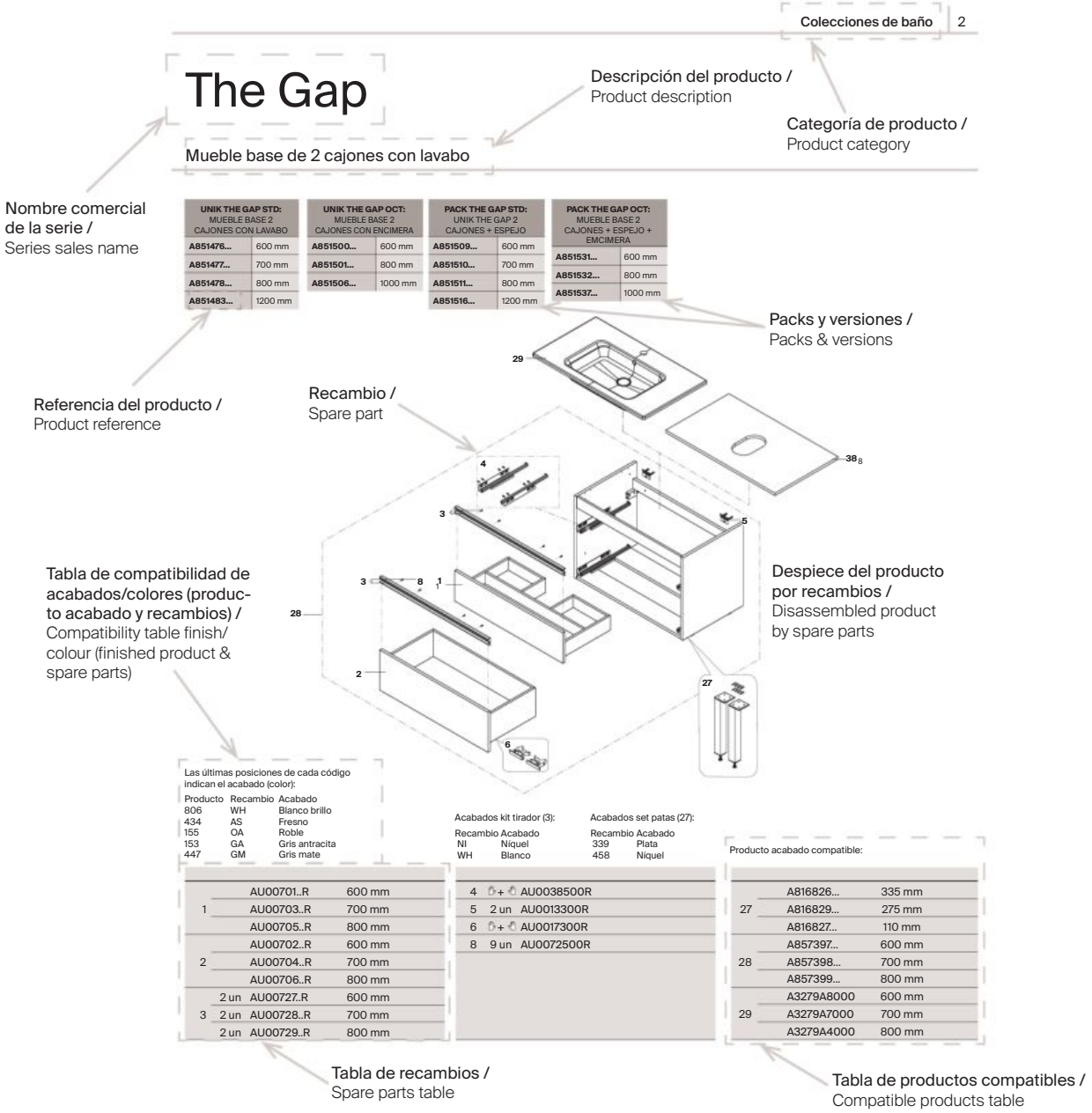

Búsqueda digital por referencia / Reference digital search

1. Abrir el documento en formato .pdf. / Open document in .pdf format.
2. Introducir en el buscador la referencia del producto excepto los 3 últimos dígitos. / Insert product reference in searcher except 3 last digits.
3. El buscador te llevará a la página correspondiente al producto, una vez ahí identificar el recambio en el dibujo explosionado y su código en la tabla de recambios. / Searcher will take you to product page, identify spare part in exploded drawing and code in spare part table.

Índice / Index

6 Recambios Top 100 / Top 100 spare parts

11 Recambios mamparas Top 10 / Top 10 shower enclosures spare parts

12 Recambios mamparas más comunes / Most common shower enclosures spare parts

18 Bañeras / Bathtubs

19 Surfex®
22 Stonex®
29 Acrílicas / Acrylic
33 Acero / Steel
34 Desagües para bañeras / Bathtub drains

35 Platos de ducha / Shower trays

36 Desagües platos de ducha / Shower trays drains
37 Senceramic®
38 Stonex®
44 Acrílicos / Acrylics
46 Porcelana / Vitreous China
48 Sistemas In-Drain / In-Drain Systems
50 Marcos de instalación / Installation frames

51 Mamparas / Shower enclosures

51 Mamparas / Shower enclosures

52 Line
60 Brisa
69 Mistral
71 Naray
81 Ura-N
91 Ura
104 Ura (Old)
111 Victoria Plus
118 Victoria-N
130 Victoria
143 Easy Express

160 Perfiles suplementarios / Supplementary frames

161 Colecciones de baño / Bathroom collections

162 W+W
163 Armani / Casa - Colección Baia / Armani / Casa - Baia Collection
168 Armani / Casa - Colección Island / Armani / Casa - Island Collection
171 Armani / Casa - Colección Island (Old) / Armani / Casa - Island Collection (Old)
172 Beyond
184 Carmen (Old)
189 Hall
190 Inspira
193 Inspira Square / Round
194 Inspira (Old)
197 Meridian In-Tank
199 In-Wash® Insignia + In-Tank®
202 In-Wash® Inspira + In-Tank®
203 In-Wash® Inspira
205 In-Wash® Ona
208 Multiclean®
210 Dama-N
221 Ona
233 Delta
235 The Gap
247 The Gap Original
260 Debba
271 Debba Compact
274 Victoria-N
278 Victoria (Old)
283 Victoria
290 Victoria Original
291 Victoria Basic
295 Tura
303 Amberes
304 Khroma
305 Barcelona
306 Mecanismos universales / Universal mechanisms
313 Fijaciones y otros recambios / Fixations and other spare parts
315 Pulsadores, tiradores, fijaciones y juntas / Push buttons, pull handles, fixations and gaskets
318 Recambios originales/ Original spare parts
319 Inspira Square / Round
320 Dama-N
321 Ona
323 The Gap Square
327 The Gap Round
328 Debba Square
329 Debba Round
330 Victoria
331 Civic
332 Meridian-N
334 Tura
335 Otras series de asientos y tapas / Other seats & covers series

342 Espacios públicos / Public spaces

343 Accesibilidad / Accessibility

343 Access
347 Access Pro
348 Access Comfort
349 Public Touchless
350 Public
351 Ona
352 Victoria Pro

354 Urinarios / Urinals

354 Site
355 Proton
357 Euret
359 Spun
360 Hall
361 Chic
362 Mural & Urinett
363 Urito, Mini, Wing & Track
364 Divo

365 Griferías electrónicas / Electronic faucets

365 Ona-E
366 Cala-E
367 L90-E
368 M3-E
369 L70-E
370 L30-E
371 Atlas-E
372 L20-E
372 L20 Connect
373 M2-E
374 Loft-E
375 Loft Connect
376 Sentronic-E
377 Sentronic-R
378 Sentronic-S
379 Sentronic-S Connect
380 Sentronic-V
380 Vortex
381 Moai-E
382 Otras series de griferías electrónicas / Other electronic faucets

383 Griferías temporizadas / Self-Closing faucets

383 Instant
384 Instant Care
385 Instant Foot
386 Instant Pro
387 Fluent
388 Sprint-N
390 Sprint
391 Avant

Índice / Index

394 Otras series de griferías temporizadas / Other self-closing faucets

395 Fluxores / Fluxors

395 Fluxor Gem
396 Aqualine Basic
396 Aqualine Plus
397 Aqualine
398 Aqualine Empotrado
399 Aqualine Confort
400 Fluxores de empotrar/ Built-in flush valves
401 Otras series de fluxores / Other fluxors

401 Vertederos / Slop hoppers

401 Vertederos / Slop hoppers

402 Tanque universal / Universal tank

402 Tanque Universal / Universal tank

403 Lavabos, muebles de baño, espejos e iluminación / Washbasins, bath furniture, mirrors and lighting

404 Surfex® Lavabos configurables / Surfex® configurable Washbasins
406 Desagües Surfex® / Surfex® Waste drains
407 Lavabos Stonex® / Stonex® Washbasins
409 Storia
411 Ohtake
413 Horizon
415 Terra
416 Element
417 Stratum-N
421 Prisma
428 Natura
429 Lander
430 Tenue
433 Aleyda
438 Tenet
440 Tenor
442 Optica
454 Romea
455 Domi
457 Anima
459 Mini
460 Mini Pro
461 Extra
462 Delta
464 Heima
467 Savana
467 Suma
468 Otras series de muebles / Other furniture series
468 Espejos LED / LED Mirrors
469 Prisma
470 Luna Ambient
471 Luna & Eidos
475 Luna
480 Eidos-N
481 Starlight
481 Moonlight
482 Delight
483 Smartlight

484 Griferías y columnas Faucets & columns

486 Griferías / Faucets

486 Armani / Casa - Colección Baia Armani / Casa - Baia Collection
489 Armani / Casa - Colección Island Armani / Casa - Island Collection
496 Nu
503 Insignia / Insignia Colors
507 Pals
511 L90 C
512 L90
519 Naia / Naia Colors
523 Ona
529 Evol
530 Thesis
533 Lanta
534 Targa-N
540 Targa
544 Atlas
548 Malva
550 Monodin-N
553 Monodin
555 Cala
557 L20
560 Alfa
561 Victoria Plus
564 Victoria
566 Loft
571 Carmen
574 Brava-N
577 Termostatos Gran Caudal High flow thermostat
578 T-3000 Switch
579 T-2000
580 T-1000 Square
581 T-1000 Round / T-1000 Round Colors
584 T-500
588 Victoria (T-500)
590 Puzzle-T
592 Puzzle
593 RocaBox Universal
594 RocaBox Monomando RocaBox Single-lever
595 RocaBox Termostático RocaBox Thermostatic
596 Cala RocaBox
597 Victoria Pro
599 M2-N
601 Modena
602 Moai
606 Singles
607 BCN
608 Logica-N
610 Monodin
612 Florentina
614 Element
615 Brava
618 Hide & Seat
619 Frontalis
620 Singles Open
621 Urban
622 Esmai
624 Gante
625 T-5000 (Panama)
626 Amura
628 Touch
630 Monojet
631 Vectra
632 Betap
634 Loft Elite
636 Verona
638 Prada
639 Kendo
640 Silver Shadow-Crown
642 M2
643 Logica
645 Monodin Top
647 Victoria Plus
648 Brava Retro
651 Atai
654 Fit
655 Duchas, rociadores y barras Showers, shower heads & bars
657 Embellecedores, rosetones y caperuzas Trimplates, rosettes & caps
658 Manecillas accionamiento monomandos Single-lever handles
661 Crucetas / Crossheads
662 Índices / Indexs
663 Monturas Headworks
664 Cartuchos / Cartridges
665 Inversores y desviadores Inverters & diverters
668 Flexibles de alimentación y ducha Flexible and shower hoses
669 Aireadores, rompechorros y limitadores Aerators, flow straightners & limiters

Índice / Index

672 Desagües universales para lavabo y bidé / Basin & bidet universal wastes
673 Desagües / Wastes
674 Complementos fijación lavabo
Basin fixation complements
675 Recambios varios grifería
Faucet various spare parts

676 Columnas de ducha /
Shower columns

676 Deck-T
677 Level-T
678 Index-T
681 Even-T Square
683 Even-T Round
684 Even-T
685 Victoria-T
687 Victoria-T Plus
692 Victoria-T Basic
694 Even-M
696 Vega, Vega Plus
697 L-20
698 Victoria-Monomando Plus
700 Victoria Monomando Basic
702 Deck M, Deck S
703 Victoria-C
704 Loft
705 Victoria Connect
706 Carmen
707 Eternal
708 Essential
709 Essential 2.0
710 Evolution
713 Flat
715 Otras series de columnas
Other column series
717 Kits de ducha / Shower kits
718 Sets de ducha / Shower sets

719 Caños para bañera / Bath spouts

719 Insignia
719 Lanta

720 Conjuntos de ducha para bidé /
Shower kit mixers for bidet

720 Flowdream
720 Be Fresh

722 Griferías para cocina /
Kitchen faucets

722 Syra-E
723 Syra
724 Syra-F
725 Glera Pro
726 Glera
727 Ona
728 Cala
729 L90
730 Mencia
731 L20
733 Victoria
735 Victoria Plus
736 Inversores / Inverters

738 Accesorios /
Accesories

739 Accesorios de metal /
Metallic accesories

739 Armani / Casa - Island
740 Tempo
742 Allegro
743 Carmen
744 Hotels Classic
746 Hotels
749 Hotels Square
750 Hotels Round
753 Hotels
756 Rubik
757 Record
758 Victoria
761 Victoria (old)
766 Sonata
768 Compas
771 Otros accesorios de metal /
Other metallic accesories
773 Superinox mate / Matt superinox

774 Accesorios de acero inoxidable /
Stainless steel accesories

774 Otros accesorios de acero inoxidable /
Other stainless steel accesories

775 Accesorios de porcelana /
Porcelain accesories

775 Accesorios de porcelana /
Porcelain accesories

776 Accesorios de resina /
Resin accesories

776 Ona
777 Rondo
778 Ice

779 Otros accesorios y toalleros /
Other accessories and towel rails

779 Extra

780 Fregaderos /
Kitchen sinks

781 Quarzex®
785 Acero inoxidable / Stainless steel
799 Gres
800 Silacryl

803 Sistemas de instalación /
Installation systems

804 Sistemas Duplo Armani / Casa /
Armani / Casa Duplo Systems
805 Placas de accionamiento Armani / Casa
Armani / Casa Push Plates
806 Sistemas Duplo One /
Duplo One Systems
812 Placas de accionamiento One /
Plush plates One
815 Sistemas Duplo S /
Duplo S Systems
824 Placas de accionamiento Duplo S /
Plush Plates Duplo S
825 Sistemas Duplo / Duplo Systems
841 Placas de accionamiento / Plush plates
846 Duplo Retro

849 Compatibilidad recambios con otras series /
Spare parts compatibility with other series

Toda factura tendrá el recargo del I.V.A.
La presente tarifa anula las anteriores.

Los recambios cuyo precio esté indicado con la nomenclatura N.D. están en estado obsoleto y no disponible para la venta (fin de existencias).
Los recambios cuyo código incorpore dígitos sin definir como .. o ... mostrarán el precio del acabado más común.

© Roca Sanitario S.A.U. Barcelona 2026.
Dentro de la política de desarrollo continuo de sus productos, Roca se reserva el derecho de modificar en todo momento y sin previo aviso cualquiera de los modelos y elementos descritos en esta publicación, por lo que Roca no garantiza su disponibilidad ni que las especificaciones, colores, formas y demás características que se reproducen coincidan en todo momento con las reales. Los ambientes que se exponen son meramente decorativos, sin que en su composición se hayan considerado necesariamente posibles exigencias técnicas de instalación. Queda prohibida la reproducción total o parcial del contenido de esta publicación salvo autorización expresa de Roca.

Recambios Top 100 / Top 100 spare parts

1 **AH0003400R** 	2 **AH0003200R** 	3 **AH0001800R** 	4 **AI0002100R** 	5 **AH0003300R** 
6 **AH0003600R** 	7 **AH0003500R** 	8 **AH0001700R** 	9 **A526005510** 	10 **AV0007900R** 
11 **AV0007400R** 	12 **AV0007700R** 	13 **AI0001200R** 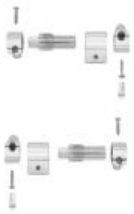	14 **AV0025600R** 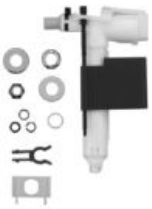	15 **AH0001600R** 
16 **AH0003800R** 	17 **AH0007100R** 	18 **A525092709** 	19 **AV0031300R** 	20 **AV0009400R** 

		€
1	**AH0003400R**	31,50
2	**AH0003200R**	29,00
3	**AH0001800R**	13,30
4	**AI0002100R**	10,80
5	**AH0003300R**	31,00

		€
6	**AH0003600R**	32,30
7	**AH0003500R**	29,50
8	**AH0001700R**	14,00
9	**A526005510**	90,20
10	**AV0007900R**	14,60

		€
11	**AV0007400R**	6,13
12	**AV0007700R**	14,60
13	**AI0001200R**	86,70
14	**AV0025600R**	36,80
15	**AH0001600R**	12,40

		€
16	**AH0003800R**	27,40
17	**AH0007100R**	2,74
18	**A525092709**	73,20
19	**AV0031300R**	80,90
20	**AV0009400R**	6,16

Toda factura tendrá el recargo del I.V.A.
La presente tarifa anula las anteriores

21 **AH0002100R** 	**22** **AV0012400R** 	**23** **AI0002900R** 	**24** **AH0005300R** 	**25** **AI0001100R** 
26 **AV0007200R** 	**27** **AG0054403R** 	**28** **AH0004200R** 	**29** **AI0012400R** 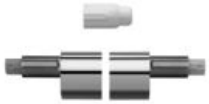	**30** **A525087300**  verde
31 **AH0005700R** 	**32** **AV0008000R** 	**33** **AG0093707R** 	**34** **AH0007000R** 	**35** **A525081303** 
36 **AH0002000R** 	**37** **AI0005500R** 	**38** **AV0031100R** 	**39** **AV0017900R** 	**40** **AH0006900R** 

		€
21	**AH0002100R**	13,80
22	**AV0012400R**	34,80
23	**AI0002900R**	4,63
24	**AH0005300R**	52,80
25	**AI0001100R**	35,80

		€
26	**AV0007200R**	2,72
27	**AG0054403R**	143,00
28	**AH0004200R**	66,50
29	**AI0012400R**	47,90
30	**A525087300**	18,90

		€
31	**AH0005700R**	38,10
32	**AV0008000R**	6,69
33	**AG0093707R**	153,00
34	**AH0007000R**	2,60
35	**A525081303**	49,90

		€
36	**AH0002000R**	14,50
37	**AI0005500R**	15,30
38	**AV0031100R**	80,90
39	**AV0017900R**	28,50
40	**AH0006900R**	2,60

Toda factura tendrá el recargo del I.V.A.
La presente tarifa anula las anteriores

41	AG0053707R		42	A525080509	
43	AV0007300R		44	AV0007500R	
45	AH0002200R		46	AV0028800R	
47	AV0015000R		48	AI0002500R	
49	AV0007800R		50	AV0034800R	
51	AH0001900R		52	AH0002300R	
53	AG0055907R		54	AH0002900R	
55	A525017303		56	AI0005800R	
57	AV0025900R		58	AI0016200R	
59	AI0006500R		60	A525003000	

		€
41	AG0053707R	39,20
42	A525080509	18,40
43	AV0007300R	6,52
44	AV0007500R	5,51
45	AH0002200R	13,50

		€
46	AV0028800R	17,30
47	AV0014600R	37,50
48	AI0002500R	4,33
49	AV0007800R	8,11
50	AV0034800R	70,80

		€
51	AH0001900R	8,43
52	AH0002300R	8,00
53	AG0055907R	173,00
54	AH0002900R	3,51
55	A525017303	125,00

		€
56	AI0005800R	10,20
57	AV0025900R	12,50
58	AI0016200R	5,77
59	AI0006500R	23,70
60	A525003000	36,40

Toda factura tendrá el recargo del I.V.A.
La presente tarifa anula las anteriores

61 AV0002900R		**62** AG0055700R		**63** AI0002400R	
64 AV0007600R		**65** AV0013100R			
66 A505400000		**67** AI0012500R		**68** AG0084903R	
69 A506403207		**70** AI0016300R			
71 AH0005000R		**72** AV0017200R		**73** AV0018000R	
74 AG0054600R		**75** A5A9317C00			
76 AV0015100R		**77** AH0015800R		**78** AG0064300R	
79 A525015803		**80** AI0006300R			

		€
61	AV0002900R	24,70
62	AG0055700R	50,30
63	AI0002400R	3,78
64	AV0007600R	3,80
65	AV0013100R	3,46

		€
66	A505400000	38,40
67	AI0012500R	21,80
68	AG0084903R	198,00
69	A506403207	97,30
70	AI0016300R	15,10

		€
71	AH0005000R	13,80
72	AV0017200R	179,00
73	AV0018000R	31,70
74	AG0054600R	108,00
75	A5A9317C00	-

		€
76	AV0015100R	6,80
77	AH0015800R	68,80
78	AG0064300R	67,30
79	A525015803	78,50
80	AI0006300R	24,30

Toda factura tendrá el recargo del I.V.A.
La presente tarifa anula las anteriores

81 A506404700		**82** A525098108		**83** AH0005400R	
84 AP0005300R		**85** AV0001100R			
86 AH0004700R		**87** AH0011200R		**88** AH0005800R	
89 AG0093107R		**90** AV0013200R			
91 A525094400		**92** AG0077807R		**93** AV0014900R	
94 AV0016100R		**95** AH0016200R			
96 AV0027200R		**97** AI0001300R		**98** A525007800	
99 AH0005200R		**100** AV0025700R			

		€
81	A506404700	47,50
82	A525098108	24,40
83	AH0005400R	66,10
84	AP0005300R	22,60
85	AV0001100R	73,20

		€
86	AH0004700R	12,60
87	AH0011200R	14,50
88	AH0005800R	72,00
89	AG0093107R	117,00
90	AV0013200R	13,70

		€
91	A525094400	9,53
92	AG0077807R	42,10
93	AV0014900R	49,10
94	AV0016100R	2,93
95	AH0016200R	2,16

		€
96	AV0027200R	73,60
97	AI0001300R	90,00
98	A525007800	11,10
99	AH0005200R	3,13
100	AV0025700R	53,60

Toda factura tendrá el recargo del I.V.A.
La presente tarifa anula las anteriores

Recambios mamparas Top 10 /
Top 10 shower enclosures spare parts

1 AM99394700	2 AM99353900	3 AM99388602	4 AM99266600	5 AM99393802
				
6 AM99330400	7 AM99414900	8 AM99353800	9 AM99394600	10 AM99414402
				

			€
1	**AM99394700**	Burlete magnético 45° reversible Naray / Reversible magnetic 45° weatherstrip Naray	5,04
2	**AM99353900**	Burlete Magnético 45° reversible 2L2 New Victoria / Reversible magnetic 45° weatherstrip 2L2 New Victoria	16,60
3	**AM99388602**	Set guiaje inferior puerta (Plata brillo) New Ura / Brisa / Door lower guide set (Glossy silver) New Ura / Brisa	5,23
4	**AM99412503**	Conjunto guiaje inferior Victoria Plus / Lower guidance set Victoria Plus	5,30
5	**AM99393802**	Conjunto guiaje inferior (Plata brillo) Naray / Lower guidance set (Glossy silver) Naray	5,57
6	**AM99330400**	Perfil vierteaguas angular L2 900 - 1200 Naray / Rain gutter profile angular L2 900-1200 Naray	11,00

			€
7	**AM99414900**	Burlete cruce Victoria Plus / Crossing weatherstrip Victoria Plus	11,10
8	**AM99353800**	Burlete cruce 6 mm 2L2 / MR / L2-E New Victoria / Crossing weatherstrip 6 mm 2L2 / MR / L2-E New Victoria	16,00
9	**AM99394600**	Burlete cruce 6 mm Naray / Crossing weatherstrip 6 mm Naray	7,37
10	**AM99414402**	Conjunto rodamientos (Plata brillo) New Ura / Victoria Plus / Roller set (Glossy silver) New Ura / Victoria Plus	20,70

Toda factura tendrá el recargo del I.V.A.
La presente tarifa anula las anteriores

Perfiles / Profiles

New Ura

		€
Perfil base (Plata brillo) / Base profile (Glossy silver)	**AM99390602**	3,30
Perfil base (Negro mate) / Base profile (Matt black)	**AM99390606**	3,16

New Line

		€
Perfil vierteaguas / Rain gutter profile	**AM99404500**	74,30
Perfil base (Plata brillo) / Base profile (Glossy silver)	**AM99405702**	75,00
Perfil base (Negro mate) / Base profile (Matt black)	**AM99405706**	98,10

Naray

		€
Perfil base (Negro mate) / Base profile (Matt black)	**AM99390606**	3,16
Perfil base (Plata brillo) / Base profile (Glossy silver)	**AM99390602**	3,30
Perfil vierteaguas L2-E 1800 / Rain gutter profile L2-E 1800	**AM99374400**	11,20
Perfil vierteaguas angular L2 900-1200 / Rain gutter profile angular L2 900-1200	**AM99330400**	11,00
Perfiles cruce / Crossing profiles	**AM99394600**	7,37

Brisa

		€
Perfil base (Negro mate) / Base profile (Matt black)	**AM99390606**	3,16
Perfil tirante (Negro mate) / Brace profile (Matt black)	**AM99393606**	26,30
Perfil tirante (Plata brillo) / Brace profile (Glossy silver)	**AM99390602**	3,30
Perfil tirante (Plata brillo) / Brace profile (Glossy silver)	**AM99393602**	13,60
Perfil cuña tapeta L2E / LF-C (Negro mate) / Cover wedge profile L2E / LF-C (Matt black)	**AM99391206**	12,10
Perfil cuña tapeta PEF / PLF (Negro mate) / Cover wedge profile PEF / PLF (Matt black)	**AM99391306**	15,10
Cobertura perfil pared (Plata brillo) / Sliding wall inner profile (Glossy silver)	**AM99390902**	21,40
Perfil cuña tapeta L2E / LF-C (Plata brillo) / Cover wedge profile L2E / LF-C (Glossy silver)	**AM99391202**	13,20
Perfil cuña tapeta PEF / PLF (Plata brillo) / Cover wedge profile PEF / PLF (Glossy silver)	**AM99391302**	17,00

New Victoria

		€
Perfil compensación (Plata brillo) / Compensation profile (Glossy silver)	**AM99353002**	24,40
Perfil base B1H / B1HF (Plata brillo) / Lower profile B1H / B1HF (Glossy silver)	**AM99350102**	10,90
Perfil vierteaguas B1H / B1HF / Rain gutter profile B1H / B1HF	**AM99354900**	16,00

Victoria Plus

		€
Conjunto perfil pared fijo (Plata brillo) / Fixed wall profile set (Glossy silver)	**AM99415702**	27,10
Conjunto perfil pared fijo (Negro mate) / Fixed wall profile set (Matt black)	**AM99415706**	24,60
Perfil base B1H / Lower profile B1H	**AM99350102**	10,90

Magnéticos / Magnetics

New Victoria

		€
Burlete magnético 45° cierre plano MR / 2P / Magnetic 45° flat closure weatherstrip MR / 2P	**AM99354000**	17,10
Burlete magnético 45° reversible 2L2 / Reversible magnetic 45° weatherstrip 2L2	**AM99353900**	16,60

Naray

		€
Burlete magnético 45° reversible / Reversible magnetic 45° weatherstrip	**AM99394700**	5,04
Burlete magnético puerta recto / Door flat magnetic weatherstrip	**AM99395000**	5,60

Victoria Plus

		€
Burlete magnético 45° reversible 2L2 / Reversible magnetic 45° weatherstrip 2L2	**AM99415100**	12,40
Burlete magnético L4-E / Magnetic weatherstrip L4-E	**AM99415400**	12,90

New Ura

		€
Burlete magnético 45° reversible 2L2 / Reversible magnetic 45° weatherstrip 2L2	**AM99415100**	12,40
Burlete magnético L4-E / PP-E / Magnetic weatherstrip L4-E / PP-E	**AM99415400**	12,90

Brisa

		€
Burlete magnético reversible cierre marco / Reversible magnetic weatherstrip frame closure	**AM99383100**	4,51
Burlete magnético angular / Angular magnetic weatherstrip	**AM99383200**	5,40

Toda factura tendrá el recargo del I.V.A.
La presente tarifa anula las anteriores

Burletes / Weatherstrips

Brisa

		€
Burlete vierteaguas 8 mm PLF / PEF / Rain gutter weatherstrip 8 mm PLF / PEF	**AM99383500**	2,50
Burlete 8 mm unión batiente / cierre LF-C / Weatherstrip 8 mm swing joint / closure LF-C	**AM99383600**	3,40
Burlete de cruce / Crossing weatherstrip	**AM99391400**	4,06
Burlete cierre L2-E / Crossing profile L2-E	**AM99391500**	13,40
Burlete vierteaguas 8 mm L2-E / Rain gutter weatherstrip 8 mm L2-E	**AM99391600**	7,80

New Ura

		€
Burlete vierteaguas / Rain gutter weatherstrip	**AM99374400**	11,20
Burlete de cruce / Crossing weatherstrip	**AM99439500**	25,30
Burlete vertical puerta PP-E / Folding door vertical joint weatherstrip PP-E	**AM99430900**	12,10

New Victoria

		€
Burlete vertical articulación puerta 2P / Vertical door joint weatherstrip 2P	**AM99354700**	14,20
Burlete vierteaguas PE / 2P / Rain gutter weatherstrip PE / 2P	**AM99354400**	13,40
Burlete cruce 6 mm 2L2 / MR / L2-E / Crossing weatherstrip 6 mm 2L2 / MR / L2-E	**AM99353800**	16,00

Victoria Plus

		€
Burlete de cruce / Crossing weatherstrip	**AM99414900**	11,10
Burlete cruce puerta MR / Door crossing weatherstrip MR	**AM99415500**	11,60
Burlete cruce cristal fijo MR / Fixed glass crossing weatherstrip MR	**AM99415600**	12,10

Tiradores / Handles

New Victoria

		€
Conjunto tirante 300 mm (Plata brillo) / Handle set 300 mm (Glossy silver)	**AM99347102**	12,60
Conjunto tirador con ranura (Plata brillo) / Handle with groove set (Glossy silver)	**AM99348102**	23,40

Naray

		€
Conjunto tirador lineal (Negro mate) / Linear handle set (Black matt)	**AM99394306**	19,40
Conjunto tirador lineal (Plata brillo) / Linear handle set (Glossy silver)	**AM99394302**	17,10

Brisa

		€
Conjunto tirador (Negro mate) / Handle set (Black matt)	**AM99387506**	44,40
Conjunto tirador (Plata brillo) / Handle set (Glossy silver)	**AM99387502**	47,30

Victoria Plus

		€
Conjunto tirador 2L2 (Planta brillo) / Handle set 2L2 (Glossy silver)	**AM99414502**	18,10
Conjunto tirador 2L2 (Negro mate) / Handle set 2L2 (Black matt)	**AM99414506**	17,70

New Ura

		€
Conjunto tirador 2L2 (Planta brillo) / Handle set 2L2 (Glossy silver)	**AM99430402**	37,40
Conjunto tirador 2L2 (Negro mate) / Handle set 2L2 (Black matt)	**AM99430406**	29,60

Rodamientos / Bearings

New Ura

		€
Conjunto rodamientos (Plata brillo) / Roller set (Glossy silver)	**AM99414402**	20,70
Conjunto rodamientos (Negro mate) / Roller set (Black matt)	**AM99414406**	21,70

Brisa

		€
Capuchón y accionamiento soft-close (Negro mate) / Cap and soft-close drive (Matt black)	**AM99387806**	5,07
Conjunto soporte rodamiento (Negro mate) / Bearing support set (Matt black)	**AM99387906**	39,40
Conjunto soporte rodamiento (Plata brillo) / Bearing support set (Glossy silver)	**AM99387902**	11,50

Toda factura tendrá el recargo del I.V.A.
La presente tarifa anula las anteriores

Rodamientos / Bearings

Naray

		€
Conjunto soporte rueda (Plata brillo) / Wheel support set (Glossy silver)	**AM99328002**	7,61
Conjunto soporte rueda (Negro mate) / Wheel support set (Matt black))	**AM99328006**	5,77

Ura

		€
Conjunto rueda con tapetas (Plata brillo) / Wheel set with caps (Glossy silver)	**AM99360102**	40,40

New Victoria

		€
Conjunto rueda excéntrica (Plata mate) / Eccentric wheel set (Matt silver)	**AM99347703**	21,60

Guías / Guides

Brisa

		€
Set guiaje inferior puerta (Negro mate) / Door lower guide set (Matt black)	**AM99388606**	6,83
Set guiaje inferior puerta (Plata brillo) / Door lower guide set (Glossy silver)	**AM99388602**	5,23
Soporte exterior guía (corto+largo) (Plata brillo) / External guide support (short+long) (Glossy silver)	**AM99388402**	31,70
Set guiaje inferir puerta (Plata brillo) / Door lower guide set (Glossy silver)	**AM99388602**	5,23
Soft-close SET / Soft-close SET	**AM99388100**	29,60
Soporte y juntas unión guía LF-C (Plata mate) / Guide union support and joints LF-C (Matt silver)	**AM99388503**	11,60

Naray

		€
Set guiaje inferior puerta (Negro mate) / Door lower guide set (Matt black)	**AM99393806**	6,59
Terminales perfil base (Negro mate) / Base profile terminals (Matt black)	**AM99393906**	8,09
Set guiaje inferior puerta (Plata brillo) / Door lower guide set (Glossy silver)	**AM99393802**	5,57
Guía unión cubierta 2L2 (Plata brillo) / Guide union cover 2L2 (Glossy silver)	**AM99340402**	6,69

New Victoria

		€
Unión guías 2L2 (Plata brillo) / Guide union 2L2 (Glossy silver)	**AM99348202**	8,59

Victoria Plus

		€
Conjunto guiaje inferior / Lower guidance set	**AM99412503**	5,30

New Ura

		€
Conjunto guiaje inferior (Plata brillo) / Lower guidance set (Glossy silver)	**AM99388602**	5,23
Conjunto guiaje inferior (Negro mate) / Lower guidance set (Matt black)	**AM99388606**	6,83

Tornillería / Screws

New Victoria / Naray / Brisa

		€
Tornillos fijación a pared / Wall fixing screws	**AM99327000**	6,19

New Victoria / Naray / Brisa

		€
Tornillos fijación a pared / Wall fixing screws	**AM99412000**	8,04

Bisagras / Hinges

Brisa

		€
Bisagra PLF (Negro mate) / Hinge PLF (Matt Black)	**AM99381106**	68,90
Bisagra PLF (Plata brillo) / Hinge PLF (Glossy silver)	**AM99381102**	69,60

New Ura

		€
Bisagras PP-E (Plata brillo) / Hinges PP-E (Glossy silver)	**AM99407902**	30,10
Bisagras PP-E (Negro mate) / Hinges PP-E (Matt Black)	**AM99407906**	29,00

Tapetas / Covers

New Victoria

		€
Tapas bisagra B1HF (Plata brillo) / Hinge covers B1HF (Glossy silver)	**AM99349102**	12,10
Tapas bisagra B1H (Plata brillo) / Hinge covers B1H (Glossy silver)	**AM99349002**	12,60
Terminales perfil base (Plata mate) / Base profile terminals (Matt silver)	**AM99347603**	8,66
Tapetas rueda MR (Plata brillo) / Wheel covers MR (Glossy silver)	**AM99348502**	12,80
Tapa tornillos 2L2 / MR / L2-E / PE / 2P (Plata mate) / Screw cover 2L2 / MR / L2-E / PE / 2P (Matt silver)	**AM99353703**	13,30
Tapa DF / BF / Lid DF / BF / Cover DF / BF / Lid DF / BF	**AM99347400**	6,33
Conjunto tope 2L2 / L2-E / MR (Plata mate) / Cover set 2L2 / L2-E / MR (Matt silver)	**AM99348303**	6,33

Naray

		€
Tapas LF / Lid LF / Covers LF / Lid LF	**AM99327300**	6,67
Tapas L2-E / Lid L2-E / Covers L2-E / Lid L2-E	**AM99327500**	29,60
Colgador (Negro mate) / Hanger (Matt black)	**AM99406806**	5,34
Colgador (Plata brillo) / Hanger (Glossy silver)	**AM99406802**	8,56
Terminales perfil base (Plata brillo) / Base profile terminals (Glossy silver)	**AM99393902**	7,73

New Line

		€
Tapeta perfil pared DF / Wall profile cover DF	**AM99401500**	74,10
Tapetas perfil pared D1H / B1H / Wall profile cover D1H / B1H	**AM99401900**	80,70
Tapas interiores, ejes y anillo art. bisagra (Plata mate) / Inner covers, axles and ring art. hinge (Matt silver)	**AM99402903**	76,30
Tapetas superiores panel enmarcado / Framed panel top profiles	**AM99403300**	56,30
Conjunto elevadores (Plata mate) / Elevator set (Matt silver)	**AM99401803**	87,30
Terminales perfil base (Plata brillo) / Base profile terminals (Glossy silver)	**AM99402002**	89,00
Terminales perfil base (Negro mate) / Base profile terminals (Matt black)	**AM99402006**	78,90

Brisa

		€
Escuadra 800 a 1400 PLF / PEF (Negro mate) / Square 800 to 1400 PLF / PEF (Matt black)	**AM99381406**	32,60
Tapeta tornillos pared escuadra (Negro mate) / Square wall screw cover (Matt black)	**AM99382206**	3,33
Tope retenedor (Negro mate) / Retainer stop (Matt black)	**AM99388206**	16,90
Cobertura guía telescópica (Negro mate) / Telescopic guide cover (Matt black)	**AM99388306**	7,76
Tapetas LF-C (Negro mate) / Covers LF-C (Matt black)	**AM99388706**	2,91
Tapeta tornillos pared escuadra (Plata brillo) / Square wall screw cover (Glossy silver)	**AM99382202**	3,50
Soportes tirante (Plata brillo) / Brace supports (Glossy silver)	**AM99387702**	13,80
Tope retenedor (Plata brillo) / Retainer stop (Glossy silver)	**AM99388202**	9,76
Cobertua guía telescópica (Plata brillo) / Telescopic guide cover (Glossy silver)	**AM99388302**	8,86
Tapetas LF-C (Plata brillo) / Covers LF-C (Glossy silver)	**AM99388702**	7,61
Tapetas y ternimales freno L2E / LF / Brake pads and ends L2E / LF	**AM99387400**	3,56
Tapa interior soportes rodamientos / Inner cover of bearing supports	**AM99388000**	34,90
Juntas y tapeta interior tirador / Gaskets and interior handle cover	**AM99387600**	2,87
Terminales perfil base (Plata brillo) / Base profile terminals (Glossy silver)	**AM99382102**	8,40
Terminales perfil base (Negro mate) / Base profile terminals (Matt black)	**AM99382106**	8,63

Tapetas / Covers

Victoria Plus

		€
Conjunto tapas telescópicas 100 (Plata brillo) / Telescopic covers set 100 (Glossy silver)	**AM99413302**	6,31
Conjunto tapas telescópicas 100 (Negro mate) / Telescopic covers set 100 (Matt black)	**AM99413306**	6,16
Conjunto tapas telescópicas 50 (Plata brillo) / Telescopic covers set 50 (Glossy silver)	**AM99413402**	11,80
Conjunto tapas telescópicas 50 (Negro mate) / Telescopic covers set 50 (Matt black)	**AM99413406**	11,80

New Ura

		€
Conjunto tapas telescópicas 100 (Plata brillo) Telescopic covers set 50 (Glossy silver)	**AM99413302**	6,31
Conjunto tapas telescópicas 100 (Negro mate) Telescopic covers set 100 (Matt black)	**AM99413306**	6,16
Conjunto tapas telescópicas 50 (Plata brillo) Telescopic covers set 50 (Glossy silver)	**AM99413402**	11,80
Conjunto tapas telescópicas 50 (Negro mate) Telescopic covers set 50 (Matt black)	**AM99413406**	11,80



Bañeras /
Bathtubs



Platos de ducha /
Shower trays



Mamparas /
Shower enclosures



Colecciones de baño /
Bathroom collections



Espacios públicos /
Public spaces



Muebles, espejos e iluminación /
Furniture, mirrors & lighting



Griferías y columnas /
Faucet & columns



Accesorios /
Accesories



Fregaderos /
Kitchen sinks



Sistemas de instalación /
Installation systems



Compatibilidad recambios con otras series /
Spare parts compatibility with other series

Bañeras / Bathtubs


VYTHOS

Surfex®

19 Armani / Casa - Colección Baia / Armani / Casa - Baia Collection

19 Beyond

20 **Alena**

21 **Modo**

Stonex®

22 **Ariane & Kauai**

23 **Ohtake**

24 **Maui**

25 **Raina**

27 **Ona**

28 **Tura**

Acrílicas / Acrylic

29 **Armani / Casa - Colección Island /** Armani / Casa - Island Collection

30 **Noya**

31 **Vythos**

32 **Genova**

Acero / Steel

33 **Evia Plus**

Desagües para bañeras / Bathtub drains

34 **Desagüe Aqua /** Aqua drain


NEWCAST

Surfex®

Armani / Casa - Colección Baia / Armani / Casa - Baia Collection

A2484490..		1800x900 mm
A2484480..	con asas / with handles	1800x800 mm

Las últimas posiciones de cada código indican el acabado (color):
The lasts positions indicates the finish (colour):
00 Cromado / Chromed
0C Greige / Greige
0V Acero pulido / Brushed Steel

Kit reparación y unión Surfex Kit reparation & union Surfex	€
AK0003100R	47,30

			€
1	**AB0052000R**		173,00
2	**AB0052100R**		130,00
3	**AB0052200R**		-
4	**AB0052700R**		-
5	**AB0052900R**		198,00
	AB005290CR		387,00
	AB005290VR		352,00
	AB0052600R		198,00
	AB005260CR		387,00
	AB005260VR		352,00

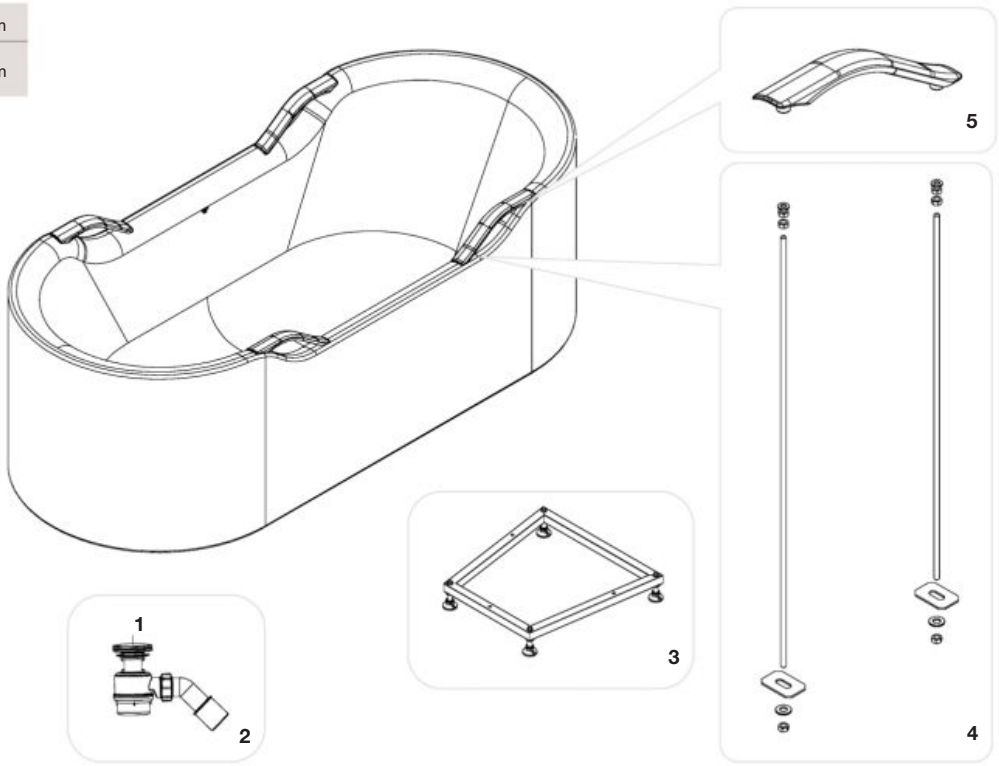

Beyond

A248452..0		1800x900 mm
A248453..0	con orificios grifería/ with holes for faucet	1800x900 mm
A248465..0		1600x750 mm

Las últimas posiciones de cada código indican el acabado (color):
The lasts positions indicates the finish (colour):
00 Blanco / White
0P Perla / Pearl
0X Onix / Onix
0B Beige / Beige
0C Café / Coffee

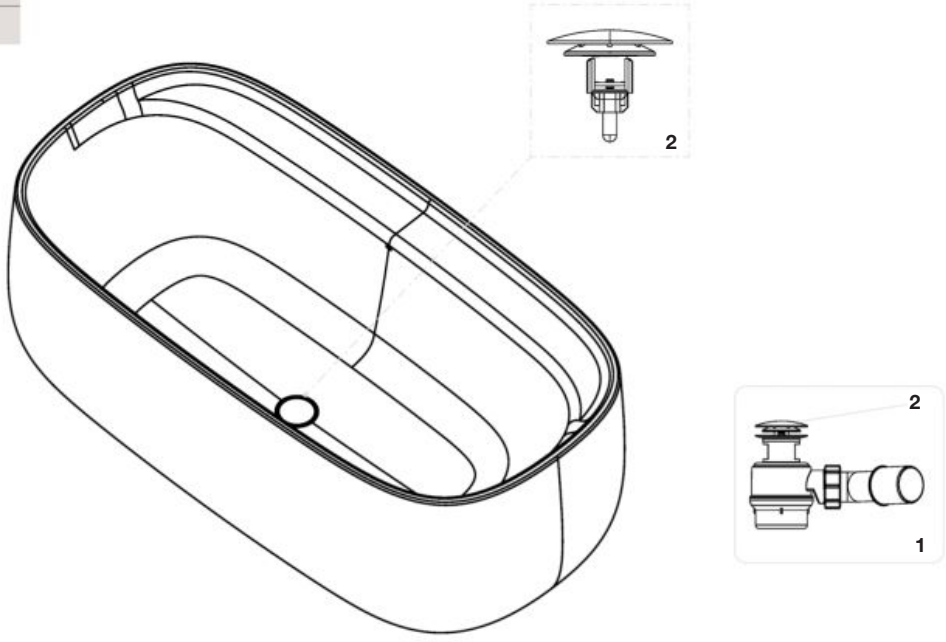

Kit reparación y unión Surfex Kit reparation & union Surfex	€
AK0003100R	47,30

		€
1	**AB0050400R**	168,00
2	**AB0050500R**	210,00

Surfex®

Alena

A248467000

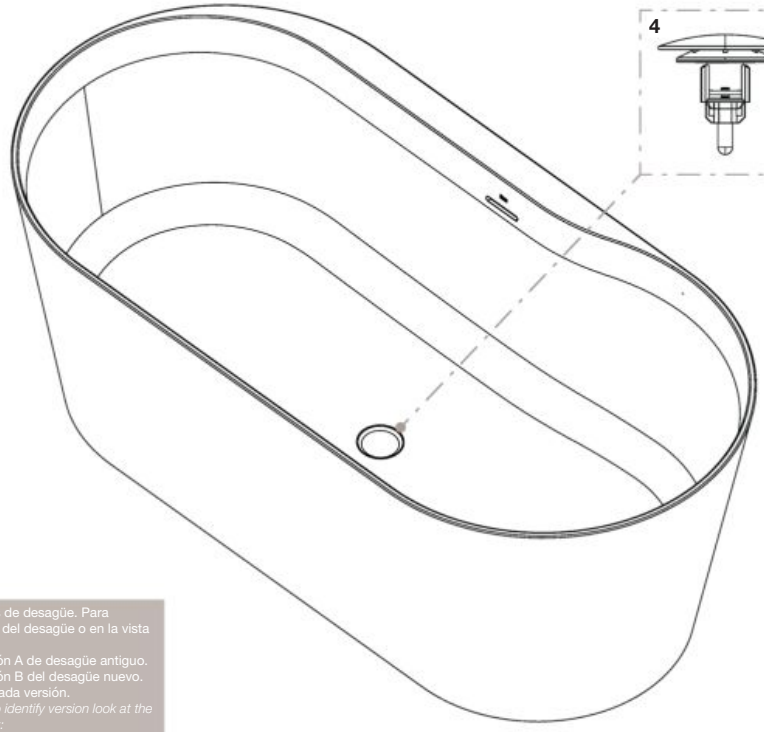

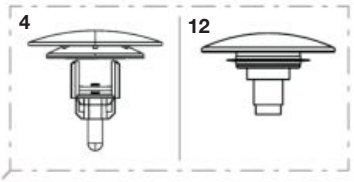

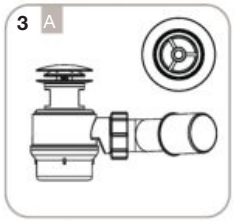



Atención a la versión de las tapas de desagüe. Para identificar la versión fijarse en la tapa del desagüe o en la vista superior del desagüe:
El recambio 1 corresponde a la versión A de desagüe antiguo.
El recambio 2 corresponde a la versión B del desagüe nuevo.
Atención recambios específicos de cada versión.
Attention to waste's covers version. To identify version look at the waste's cover or waste's superior view:
If it is like spare part 1, cover is the version A of older waste.
If it is like spare part 2, cover is the version B of new waste.
Attention to specific spare parts of each version.

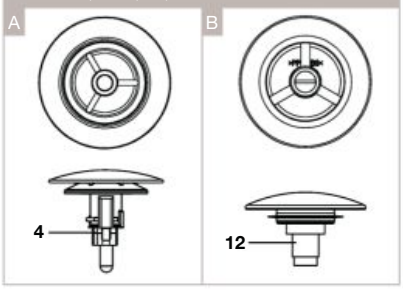

Acabados desagüe / waste finishes:

Las últimas posiciones de cada código indican el acabado (color):
The lasts positions indicates the finish (colour):
00 Cromado / Chromed
NB Negro mate / Matt black
1R Blanco mate / Matt white
0R Blanco brillo / Glossy white
RG Rosa dorado / Rose gold
CN Negro titanio / Titanium black

Kit reparación y unión Surfex Kit reparation & union Surfex	€
AK0003100R	47,30

		€
3	**AB0050400R**	168,00
4	**AB0050600R**	60,00
12	**AB0056000R**	35,80

Producto acabado compatible:
Finished compatible product:

		€
13	**A24L581000**	-
	A24L5810NB	-
	A24L58101R	-
	A24L58100R	-
	A24L5810RG	-
	A24L5810CN	-

Surfex®

Modo

AB10070832000000	1800x800 mm

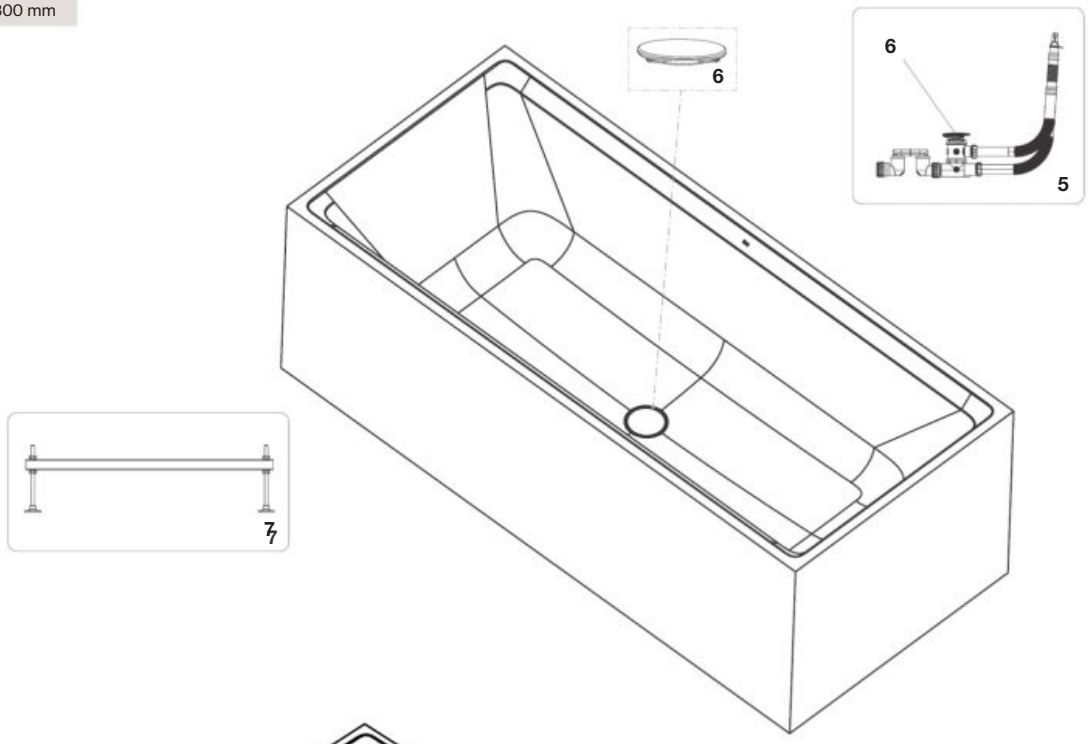

AB1107D032000000	Con cajón Roble / With Oak drawer
AB1207D032000000	Con cajón Espejo / With Mirror drawer

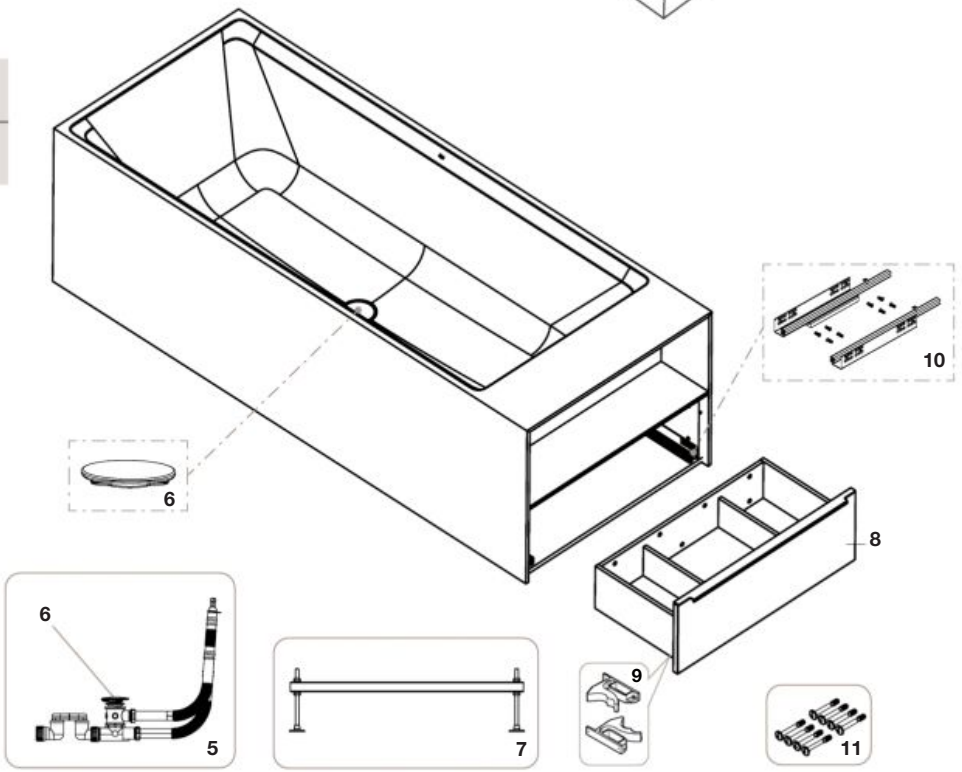

Kit reparación y unión Surfex Kit reparation & union Surfex	€
AK0003100R	47,30

				€
5		**AB0047400R**		-
6		**AB0047300R**		225,00
7	2un	**AB0047200R**		98,50
8		**AU0044200R**	Roble / Oak	365,00
		AU0044800R	Espejo / Mirror	427,00
9	+	**AU0017300R**		4,68
10	+	**AU0017600R**		54,30
11		**AU0044400R**		69,50

Stonex®

Ariane & Kauai

Ariane		
A2484700..	Bañera oval con desagüe click-clack y sifón Oval bathtub with click-clack drain and siphon	1650x750 mm
A2486690..		1650x750 mm

Kauai		
A2486170..	Bañera oval con desagüe click-clack y sifón Oval bathtub with click-clack drain and siphon	1650x750 mm

Las últimas posiciones de cada código indican el acabado (color):
The lasts positions indicates the finish (colour):
00 Blanco / White
P0 Perla / Pearl
X0 Onix / Onix
B0 Beige / Beige
C0 Café / Coffee
K0 Negro / Black

Atención a la versión de las tapas de desagüe. Para identificar la versión fijarse en la tapa del desagüe o en la vista superior del desagüe:
El recambio 1 corresponde a la versión A de desagüe antiguo.
El recambio 2 corresponde a la versión B del desagüe nuevo.
Atención recambios específicos de cada versión.
Attention to waste's covers version. To identify version look at the waste's cover or waste's superior view:
If it is like spare part 1, cover is the version A of older waste.
If it is like spare part 2, cover is the version B of new waste.
Attention to specific spare parts of each version.

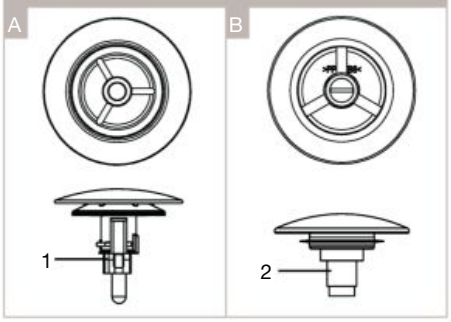

Kit reparación Stonex Kit reparation Stonex	€
AK0002910R	53,30
Kit pintura Stonex Kit paint Stonex	
AK0003010R	58,30

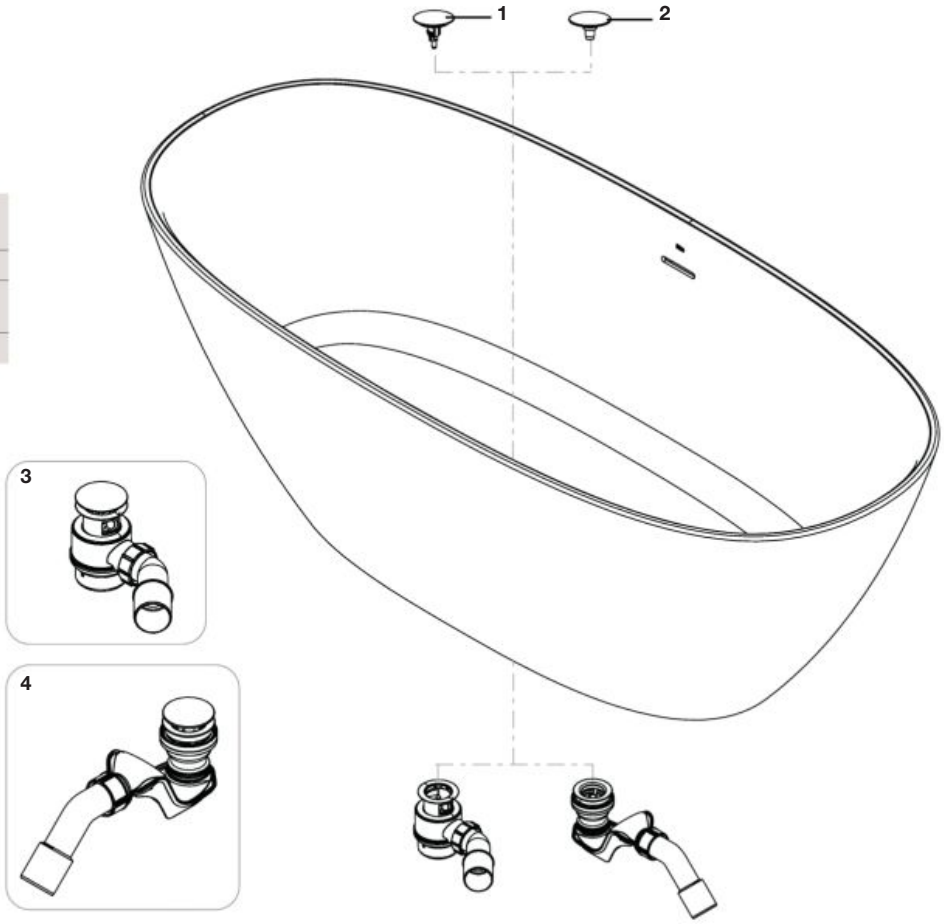

Acabados desagüe / waste finishes:

Las últimas posiciones de cada código indican el acabado (color):
The lasts positions indicates the finish (colour):
00 Cromado / Chromed
NB Negro mate / Matt black
1R Blanco mate / Matt white
0R Blanco brillo / Glossy white
RG Rosa dorado / Rose gold
CN Negro titanio / Titanium black

			€
1	**AB0050600R**	Cromado / Chromed A	60,00
2	**AB0056000R**	B	35,80
3	**AB0050400R**		168,00

Producto acabado compatible:
Finished compatible product:

		€
4	**A24L581000**	-
	A24L5810NB	-
	A24L58101R	-
	A24L58100R	-
	A24L5810RG	-
	A24L5810CN	-

Stonex®

Ohtake

A2487220..	Bañera con desagüe click-clack y sifón Bathtub with click-clack drain and siphon	1200x800 mm

Las últimas posiciones de cada código indican el acabado (color):
The lasts positions indicates the finish (colour):
00 Blanco / White
P0 Perla / Pearl
X0 Onix / Onix
B0 Beige / Beige
C0 Café / Coffee
K0 Negro / Black

Kit reparación Stonex Kit reparation Stonex	€
AK00029..R	53,30
Kit pintura Stonex Kit paint Stonex	
AK00030..R	58,30

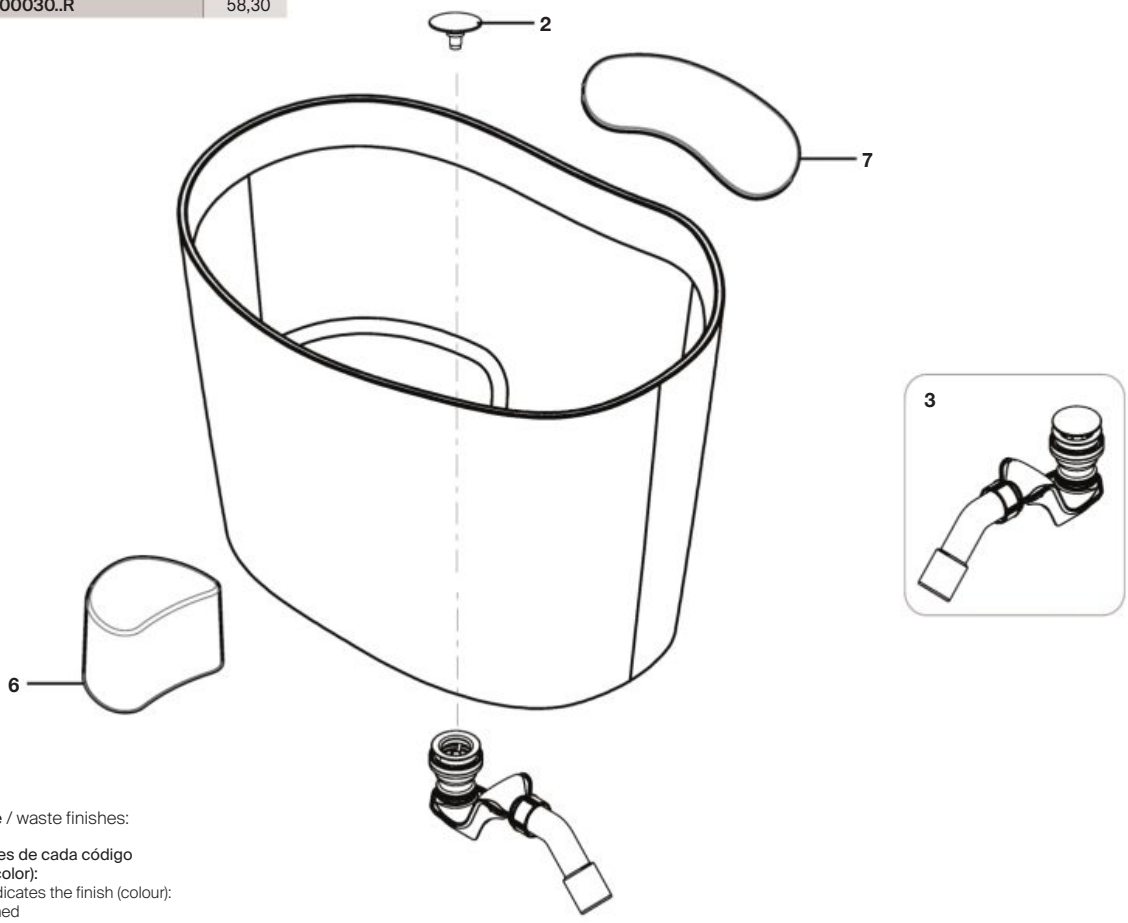

Acabados desagüe / waste finishes:

Las últimas posiciones de cada código indican el acabado (color):
The lasts positions indicates the finish (colour):
00 Cromado / Chromed
NB Negro mate / Matt black
1R Blanco mate / Matt white
0R Blanco brillo / Glossy white
RG Rosa dorado / Rose gold
CN Negro titanio / Titanium black

			€
2	**AB00560..R**	Cromado / Chromed	35,80
3	**A24L5810..**	Cromado / Chromed	-

Producto acabado compatible:
Finished compatible product:

			€
6	**A248787000**	Negro / Black	-
7	**A248786000**	Negro / Black	-

Stonex®

Maui

A2485020..	Bañera con desagüe click-clack y sifón	Square
A2486690..	Bathtub with click-clack drain and siphon	Round

Las últimas posiciones de cada código indican el acabado (color):
The lasts positions indicates the finish (colour):
00 Blanco / White
P0 Perla / Pearl
X0 Onix / Onix
B0 Beige / Beige
C0 Café / Coffee
K0 Negro / Black

Atención a la versión de las tapas de desagüe. Para identificar la versión fijarse en la tapa del desagüe o en la vista superior del desagüe:
El recambio 1 corresponde a la versión A de desagüe antiguo.
El recambio 2 corresponde a la versión B del desagüe nuevo.
Atención recambios específicos de cada versión.
Attention to waste's covers version. To identify version look at the waste's cover or waste's superior view:
If it is like spare part 1, cover is the version A of older waste.
If it is like spare part 2, cover is the version B of new waste.
Attention to specific spare parts of each version.

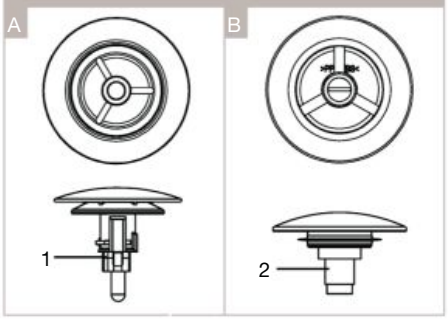

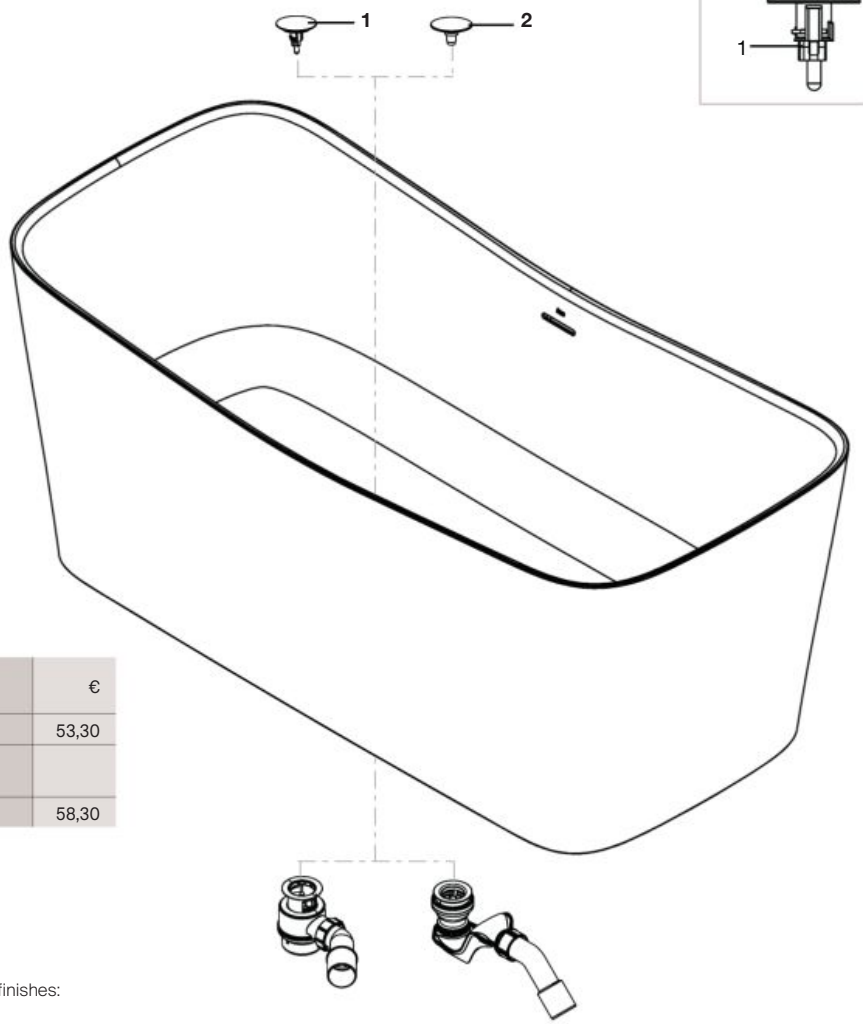





Kit reparación Stonex Kit reparation Stonex	€
AK0002910R	53,30
Kit pintura Stonex Kit paint Stonex	
AK0003010R	58,30

Acabados desagüe / waste finishes:

Las últimas posiciones de cada código indican el acabado (color):
The lasts positions indicates the finish (colour):
00 Cromado / Chromed
NB Negro mate / Matt black
1R Blanco mate / Matt white
0R Blanco brillo / Glossy white
RG Rosa dorado / Rose gold
CN Negro titanio / Titanium black

				€
1	**AB0050600R**	Cromado / Chromed	A	60,00
2	**AB0056000R**		B	35,80
3	**AB0050400R**			168,00

Producto acabado compatible:
Finished compatible product:

		€
4	**A24L581000**	-
	A24L5810NB	-
	A24L58101R	-
	A24L58100R	-
	A24L5810RG	-
	A24L5810CN	-

Stonex®

Raina

A2484660..	Bañera con desagüe click-clack y sifón Bathtub with click-clack drain and siphon	1800x800 mm

Las últimas posiciones de cada código indican el acabado (color):
The lasts positions indicates the finish (colour):
00 Blanco / White
P0 Perla / Pearl
X0 Onix / Onix
B0 Beige / Beige
C0 Café / Coffee
K0 Negro / Black

Atención a la versión de las tapas de desagüe. Para identificar la versión fijarse en la tapa del desagüe o en la vista superior del desagüe:
El recambio 1 corresponde a la versión A de desagüe antiguo.
El recambio 2 corresponde a la versión B del desagüe nuevo.
Atención recambios específicos de cada versión.
Attention to waste's covers version. To identify version look at the waste's cover or waste's superior view:
If it is like spare part 1, cover is the version A of older waste.
If it is like spare part 2, cover is the version B of new waste.
Attention to specific spare parts of each version.

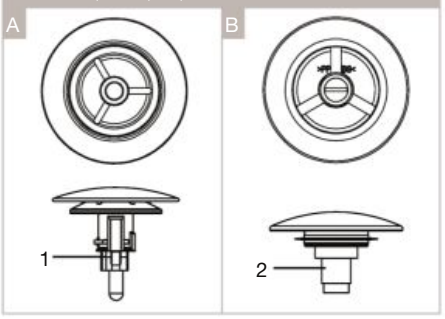

Kit reparación Stonex Kit reparation Stonex	€
AK0002910R	53,30
Kit pintura Stonex Kit paint Stonex	
AK0003010R	58,30

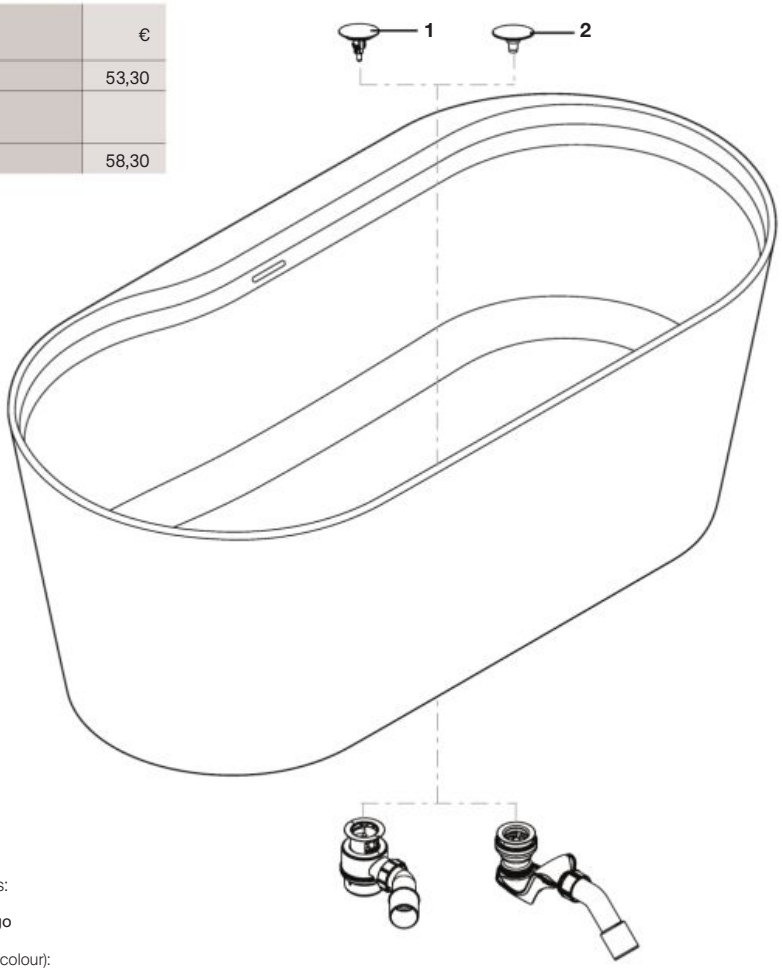





Acabados desagüe / waste finishes:

Las últimas posiciones de cada código indican el acabado (color):
The lasts positions indicates the finish (colour):
00 Cromado / Chromed
NB Negro mate / Matt black
1R Blanco mate / Matt white
0R Blanco brillo / Glossy white
RG Rosa dorado / Rose gold
CN Negro titanio / Titanium black

				€
1	**AB0050600R**	Cromado / Chromed	A	60,00
2	**AB0056000R**		B	35,80
3	**AB0050400R**			168,00

Producto acabado compatible:
Finished compatible product:

		€
4	**A24L581000**	-
	A24L5810NB	-
	A24L58101R	-
	A24L58100R	-
	A24L5810RG	-
	A24L5810CN	-

Stonex®

Raina

A2486630..	Bañera de esquina con desagüe click-clack y sifón Corner bathtub with click-clack drain and siphon	1800x800 LH
A2486640..		1600x800 RH
A2486660..		1700x750 LH
A2486670..		1700x750 RH

Kit reparación Stonex Kit reparation Stonex	€
AK0002910R	53,30
Kit pintura Stonex Kit paint Stonex	
AK0003010R	58,30

Sustituir (..) de la referencia de producto/recambio por el código de color elegido:
In the product number replace (..) with the code for the choosen colour:
00 Blanco / White
P0 Perla / Pearl
X0 Onix / Onix
B0 Beige / Beige
C0 Café / Coffee
K0 Negro / Black

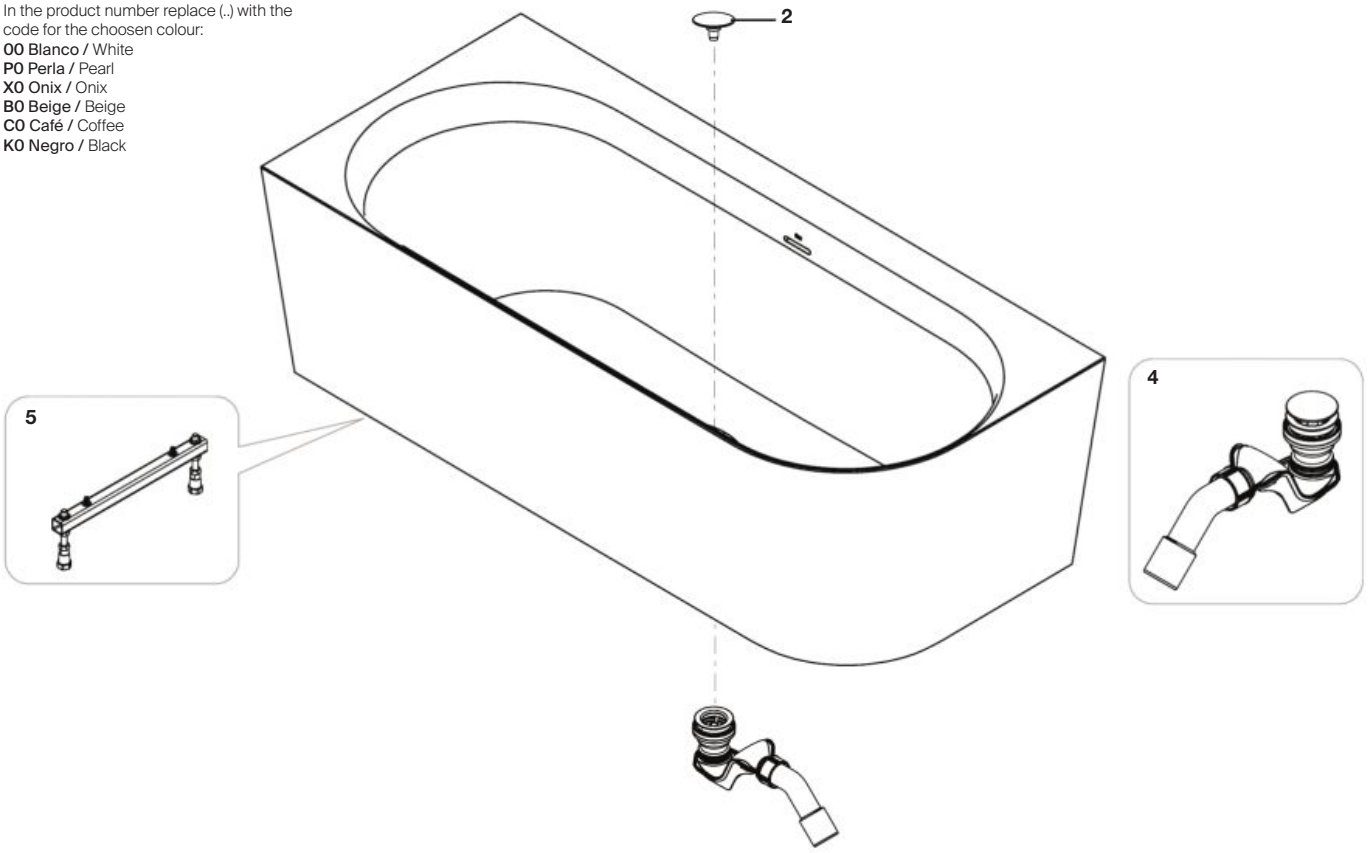

Acabados desagüe / waste finishes:

Sustituir (..) de la referencia de producto/recambio por el código de color elegido:
In the product number replace (..) with the code for the choosen colour:
00 Cromado / Chromed
NB Negro mate / Matt black
1R Blanco mate / Matt white
0R Blanco brillo / Glossy white
RG Rosa dorado / Rose gold
CN Negro titanio / Titanium black

			€
2		**AB0056000R**	35,80
4		**A24L581000**	-
		A24L5810NB	-
		A24L58101R	72,50
		A24L58100R	85,90
		A24L5810RG	85,90
		A24L5810CN	-
5	2 un	**AB0056100R**	52,00

Stonex®

Ona

A248629000	Izquierda / Left	1600x700 mm
A248638000	Derecha/ Right	1600x700 mm

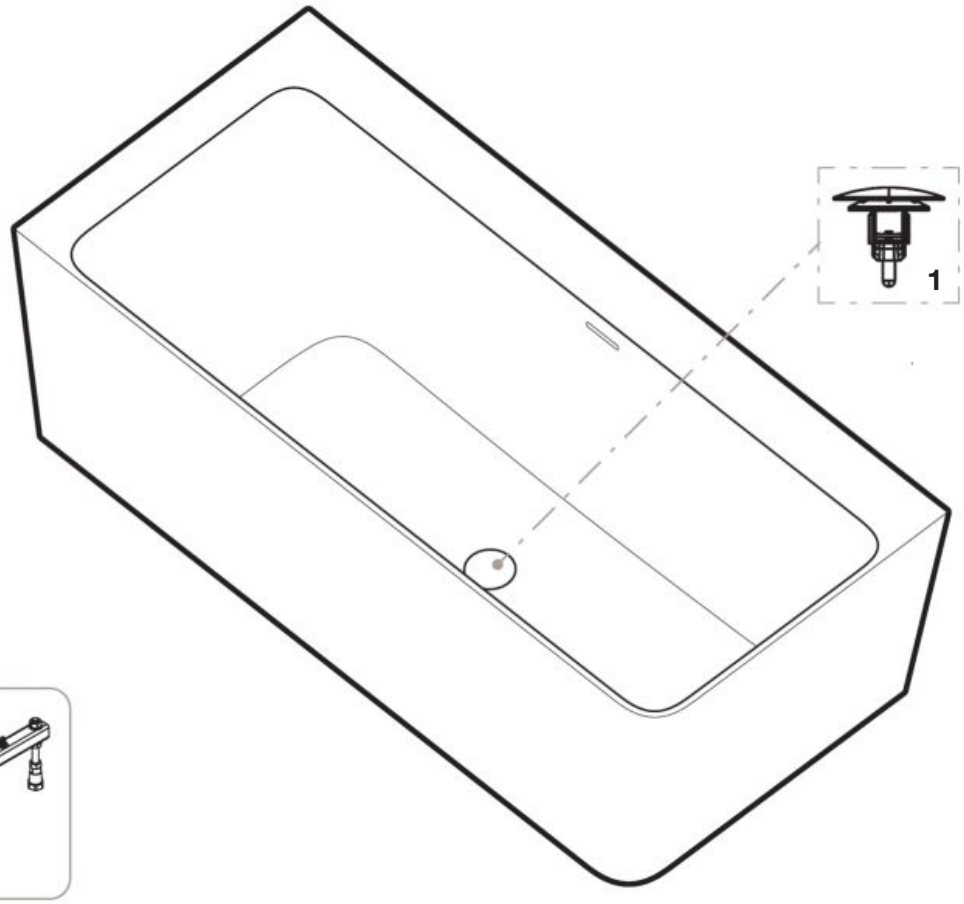

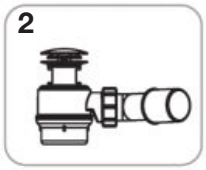

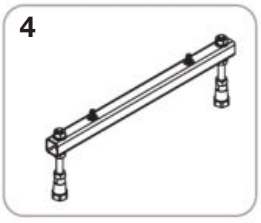

			€
1		**AB0050600R**	60,00
2		**PD5000150**	105,00
4	2un	**AB0055600R**	107,00

Stonex®

Tura

A248671000	Bañera / Bathtub	1700x750 mm

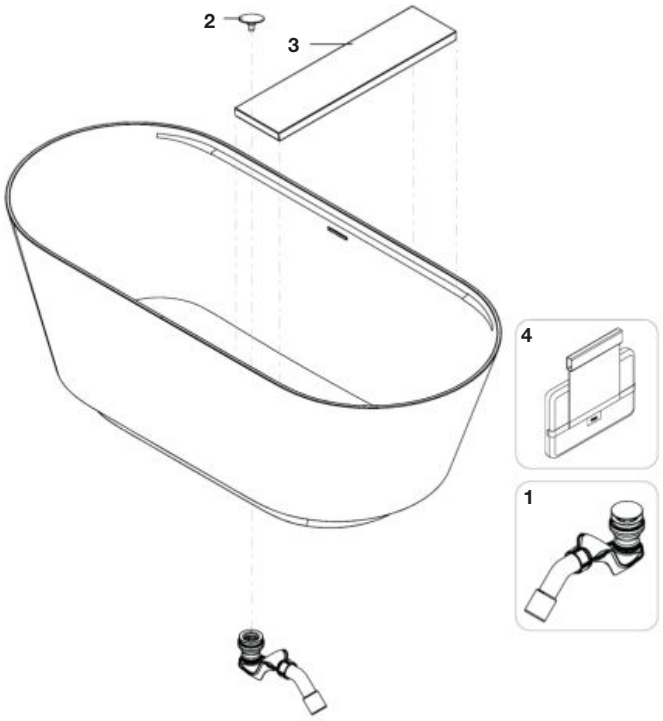

A248672000	Bañera / Bathtub	1700x750 mm	

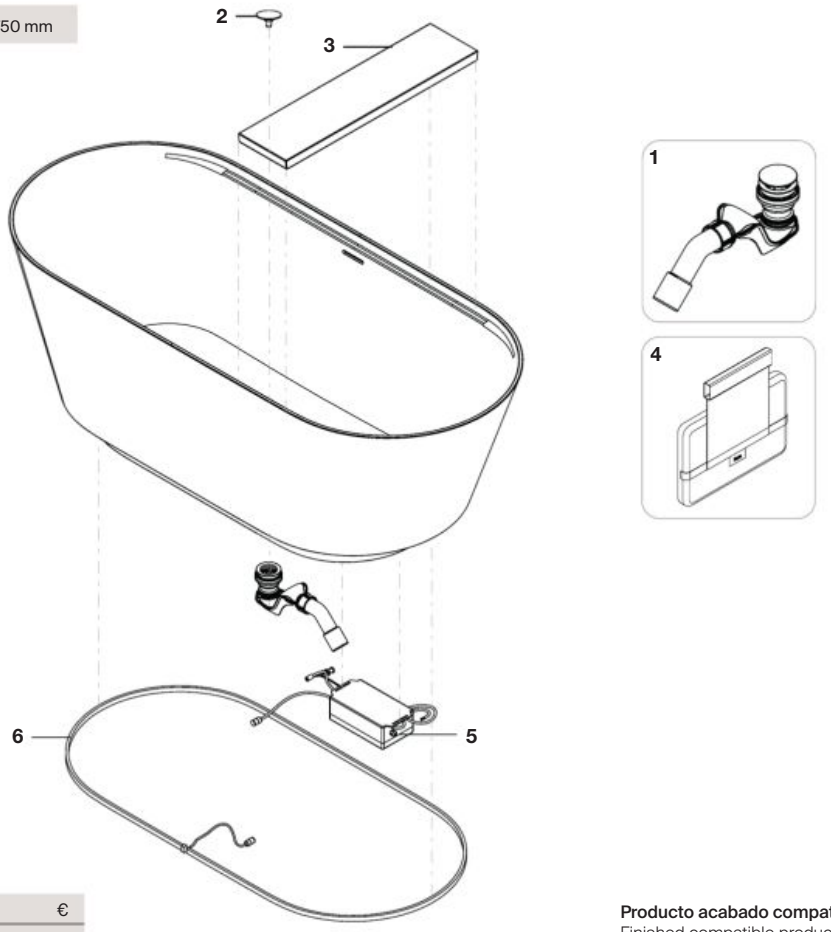

			€
2	**AB0056000R**		35,80
3	**AB0056200R**		250,00
5	**AB0056500R**	Con LED / With LED	530,00
6	**AB0056600R**		227,00

Producto acabado compatible:
Finished compatible product:

		€
1	**A24L581000**	-
4	**A248674000**	-

Acrílicas / Acrylic

Armani / Casa - Colección Island / Armani / Casa - Island Collection

A248243...	Bañera AR Hidro / Bathub AR Hydro	1800x800 mm
A248244...	Bañera AR / Bathub AR	1800x800 mm

Las últimas posiciones de cada código indican el acabado (color):
The lasts positions indicates the finish (colour):
001 White
911 Off White
R3C Greige
R5G Nero

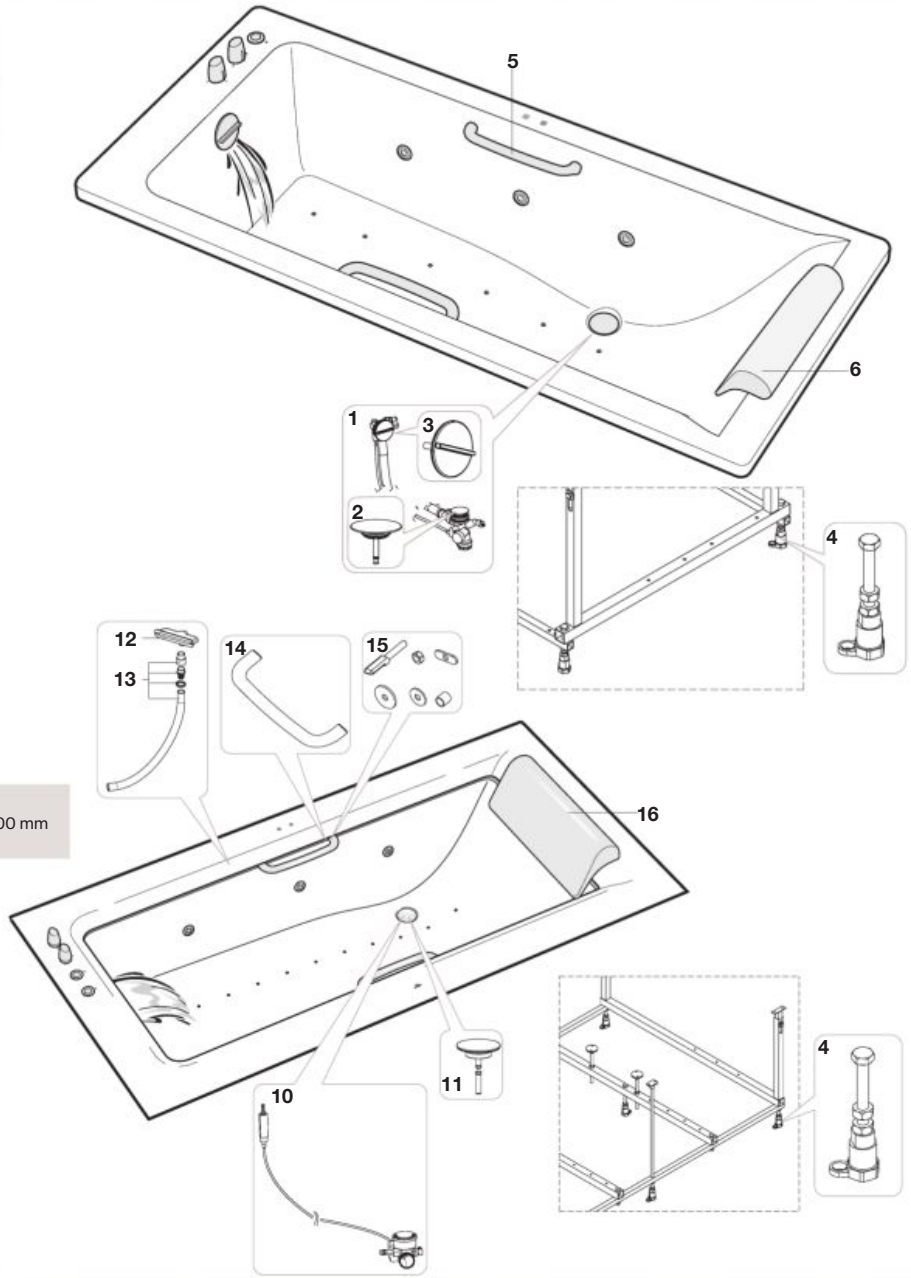

A248200...	Bañera AR Hidro encastrar / Bathub AR Hydro built-in	2145x1100 mm

Las últimas posiciones de cada código indican el acabado (color):
The lasts positions indicates the finish (colour):
001 White
911 Off White
R3C Greige
R5G Nero

				€
1	**AB0047100R**	Cromado / Chromed	218,00
	AB00471B0R	Blanco / White	267,00
	AB00471R5R	Nero	267,00
	AB00471R3R	Greige	N.D.
	AB00471R6R	Shagreen	267,00
	AB0047109R	Off White	-
2	**AB0047800R**	Cromado / Chromed	93,20
	AB00478B0R	Blanco / White	203,00
	AB00478R5R	Nero	203,00
	AB00478R3R	Greige	203,00
	AB00478R6R	Shagreen	203,00
	AB0047809R	Off White	203,00

				€
3	**AB0047900R**	Cromado / Chromed	-
	AB00479B0R	Blanco / White	133,00
	AB00479R5R	Nero	160,00
	AB00479R3R	Greige	133,00
	AB00479R6R	Shagreen	160,00
	AB0047909R	Off White	133,00
4 6 un	**A24R029000**		17,50
5 2 un	**AB0048000R**	Cromado / Chromed	-
	AB00480R3R	Greige	-
	AB00480R5R	Nero	565,00
6	**AB0048100R**	Blanco / White	121,00
	AB00481R5R	Nero	149,00
	AB00481R3R	Greige	149,00
	AB00481R6R	Shagreen	149,00
10	**AB0028900R**		190,00

				€
11	**AB0028700R**	Blanco / White	267,00
	AB0028791R	Edelweiss	N.D.
	AB00287R3R	Greige	267,00
	AB00287R5R	Nero	N.D.
	AB00287R6R	Shagreen	267,00
12	**AB0029000R**		N.D.
13	**AB0029100R**		N.D.
14	**AB0032300R**	Cromado / Chromed	187,00
	AB003230CR	Greige	N.D.
	AB003230GR	Nero	N.D.
15	**AB0032400R**		350,00
16	**AB0032200R**	Blanco / White	156,00
	AB00322R3R	Greige	N.D.
	AB00322R5R	Nero	N.D.
	AB00322R6R	Shagreen	N.D.

Acrílicas / Acrylic

Bañera Noya Slim / Noya Slim bathtub

A248798000

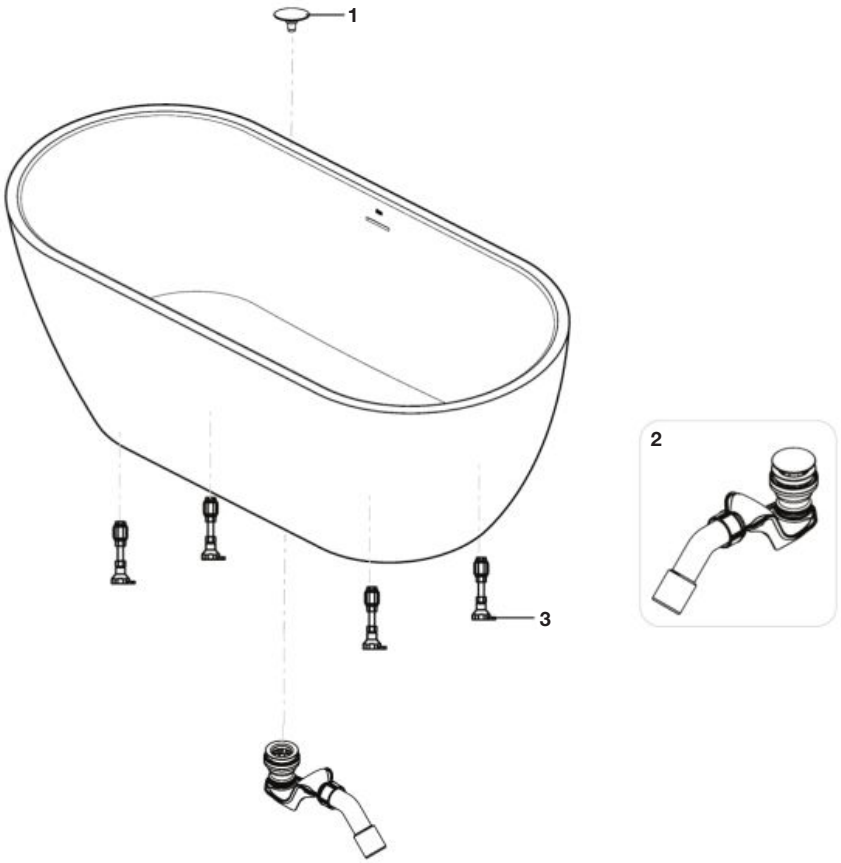

Acabados desagüe / waste finishes:

Las últimas posiciones de cada código indican el acabado (color):
The lasts positions indicates the finish (colour):
00 Cromado / Chromed
NB Negro mate / Matt black
1R Blanco mate / Matt white
0R Blanco brillo / Glossy white
RG Rosa dorado / Rose gold
CN Negro Titanio / Titanium black

			€
1		**AB00560..R**	35,80
3	2 un	**AB0060900R**	50,20

Producto acabado compatible:
Finished compatible product:

		€
2	**A24L603...**	-

Acrílicas / Acrylic

Bañera biplaza Vythos / Vythos double bathtub

A248553000	1600x750 mm
A248554000	1700x750 mm
A248555000	1700x800 mm
A248632000	1800x800 mm
A248556000	1800x900 mm

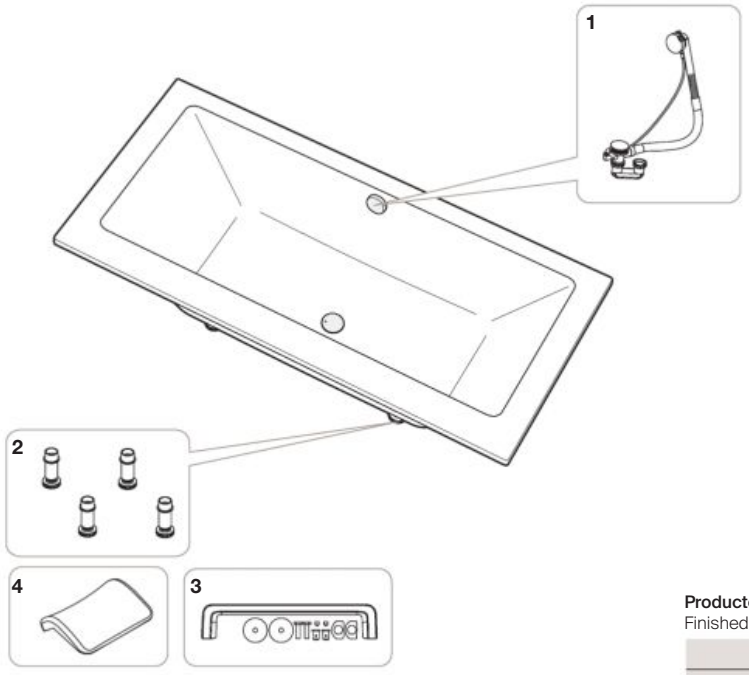

		€
2	**AB0045100R**	7,97

Producto acabado compatible:
Finished compatible product:

		€
1	**A248213001**	-
3	**A248595000**	-
4	**A248594000**	-

Bañera individual Vythos / Vythos single bathtub

A248547000	1400x700 mm
A248548000	1500x700 mm
A248551000	1600x750 mm
A248601001	1700x700 mm
A248552000	1700x750 mm

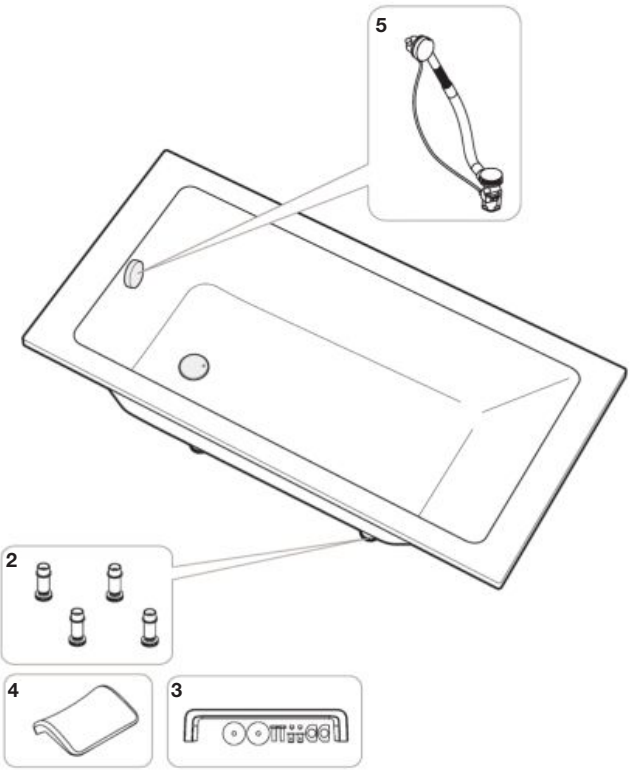

		€
2	**AB0045100R**	7,97
5	**AB0026300R**	70,20

Producto acabado compatible:
Finished compatible product:

		€
3	**A248595000**	-
4	**A248594000**	-

Acrílicas / Acrylic

Bañera biplaza Genova / Two seate acrylic bathtub

A248757000	1800 x 800 mm

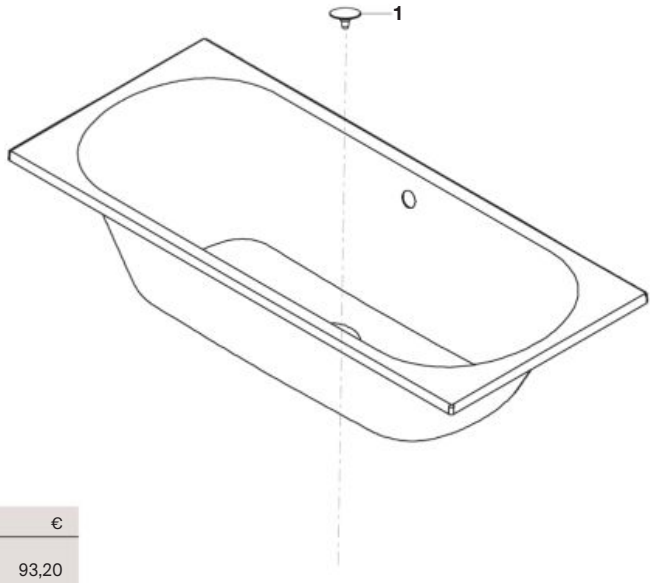

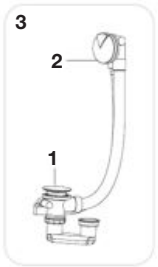

		€
1 2	**AB0047800R**	93,20
2	**AB0048800R**	44,70
3	**AB0034700R**	57,30

Bañera individual Genova / Genova single bathtub

A248758000	1700 x 750 mm
A248753000	1700 x 700 mm
A248754000	1600 x 700 mm
A248755000	1500 x 700 mm
A248756000	1400 x 700 mm

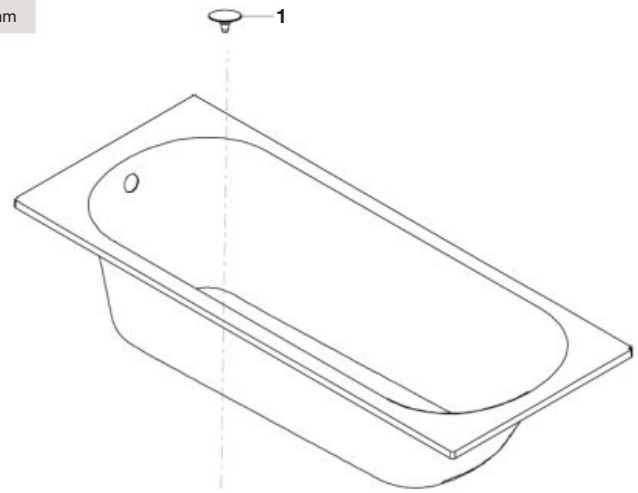

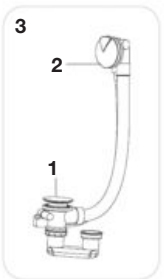

		€
1 2	**AB0047800R**	93,20
2	**AB0048800R**	44,70
3	**AB0034700R**	57,30

Acero / Steel

Evia Plus

A224050..1	Bañera con pies y maneta	1650x750 mm
A224150..1	Bathtub with feet and handle	1650x750 mm

A224070..0	Bañera con pies	1800x800 mm
A224170..0	Bathtub with feet	1700x750 mm

A224060..0	Bañera sola	1800x800 mm
A224160..0	Single bathtub	1700x750 mm

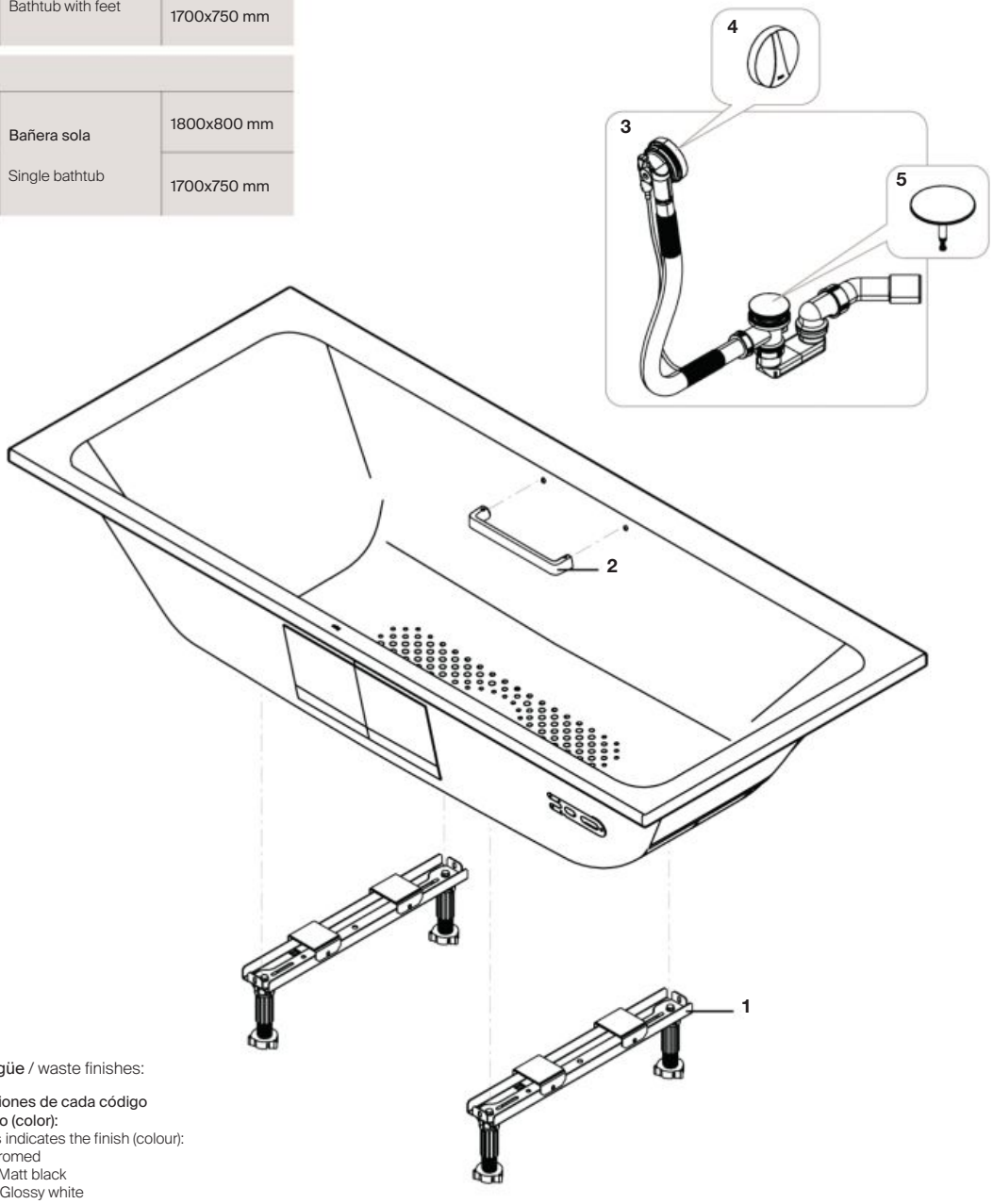

Acabados desagüe / waste finishes:

Las últimas posiciones de cada código indican el acabado (color):
The lasts positions indicates the finish (colour):
00 Cromado / Chromed
NB Negro mate / Matt black
0A Blanco brillo / Glossy white

		€
4	**AB0056400R**	9,05
	AB00564NBR	7,45
	AB005640AR	4,75
5	**AB0056300R**	6,67
	AB00563NBR	7,12
	AB005630AR	4,72

Producto acabado compatible:
Finished compatible product:

			€
1	**A248427000**	1 un	-
2	**A248595000**		-
3	**A2482130..**		-

Desagües para bañeras / Bathtub drains

Desagüe Aqua / Aqua drain

A5064046..	Desagüe automático bañera Ø52	Con sifón / With siphon
A5064047..	Automatic bathtub drain Ø52	Sin sifón / Without siphon

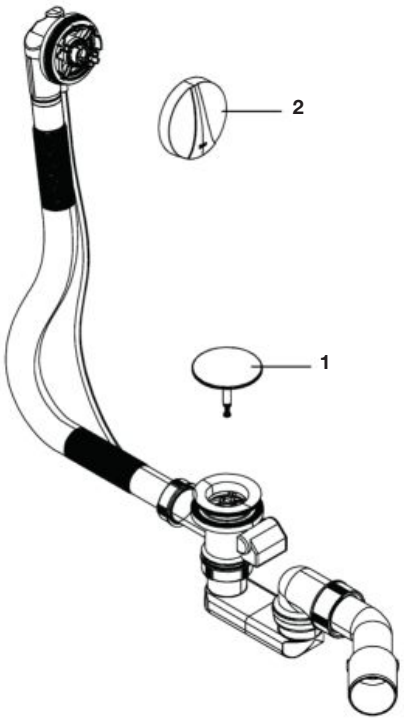

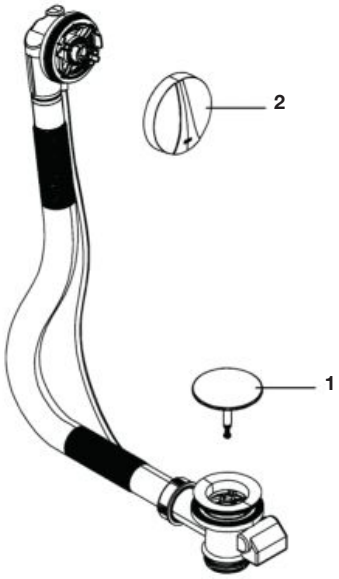

Acabados desagüe / waste finishes:

Sustituir (..) de la referencia de producto/recambio por el código de color elegido:
In the product number replace (..) with the code for the choosen colour:
00 Cromado / Chromed
NB Negro mate / Matt black
0A Blanco brillo / Glossy white

		€
1	**AB0056300R**	6,67
	AB00563NBR	7,12
	AB005630AR	4,72
2	**AB0056400R**	9,05
	AB00564NBR	7,45
	AB005640AR	4,75

Platos de ducha /
Shower trays



SISTEMA IN-DRAIN

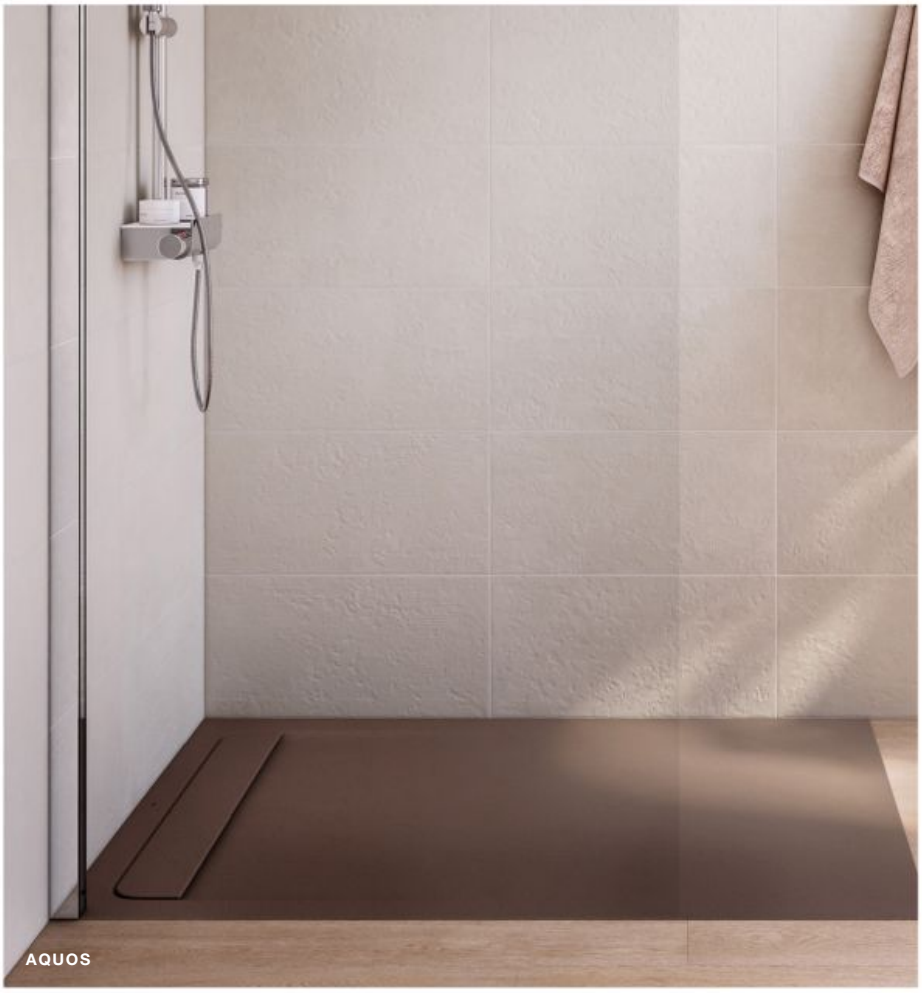

AQUOS

Desagües platos de ducha / Shower trays drains

Senceramic®

37 **Cratos**

Stonex®

38 **Armani / Casa - Colección Baia /** Armani / Casa - Collection Baia

39 **Aquos**

40 **Pyros**

41 **Helios**

42 **Terran Original**

43 **Terran**

Acrílicos / Acrylics

44 **Neo Daiquiri**

45 **Granada**

Porcelana / Vitreous China

46 **Armani / Casa - Colección Island /** Armani / Casa - Colection Island

47 **Malta**

Sistemas In-Drain / In-Drain Systems

48 **In-Drain Channel**

49 **In-Drain Basic**

Marcos de instalación / Installation frames

50 **Para Pyros /** For Pyros

50 **Para otros platos de ducha /** For other shower trays

Desagües platos de ducha / Shower trays drains

Circulares / Round

			Desagüe / Drain				Tapeta / Cover			Tubo Inmersión / Immersion tube	
Ø90	Showerbasin, Wellsuite, Cabinas Advant, Showersuite		**A2HL029000**		N.D.	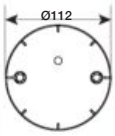	**AP0005300R**	22,60		**AP0006300R**	18,50
	Kirr Royal, Royal Fizz, Element, Paradise, Flamingo, Sherry-N, Bourbon-N, Opening, Brandy, Veranda, Hall, Easy, Plain, In-floor, Blues, Daiquiri, Neo Daiquiri		**AP0005400R**	Cromado / Chroma	45,30					**AP0006300R**	18,50
			AP0006600R	Blanco / White	59,90		**AP0006500R**	50,20			
			AP0006691R	Edelweiss	62,10		**AP0006591R**	37,00			
			-	-	-	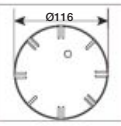	**A503881000**	12,60	-	-	-
	Hide & Seat		**AP0004200R**		166,00	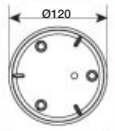	**AP0004300R**	50,50	-	-	-
	Transtube		**AE0000300R**		N.D.	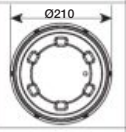	**A2R0073000**	48,50	-	-	-
	Glace, Modo		**A27L020000**		-	-	-	-		**AP0008500R anterior a 2020 /** before 2020	33,50
	Terran		**A27L018000**	Blanco / White	-		**AP0006100R**	10,20		**AP0009500R posterior a 2020** (gris) / after 2020 (grey)	2,29
Ø65	Italia, Easy	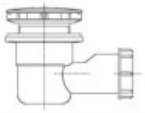	**AP0005900R**		33,20	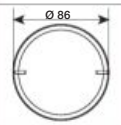	**AP0006000R**	37,60	-	-	-
Ø52	Havana Club, Daiquiri (anterior 2012), Blues	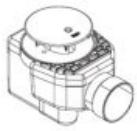	**AP0005500R**		37,10		**A503880200**	20,10		**AP0006800R**	46,10
			A27L045000		-						
Ø90	Cratos		**A27L045000**		-	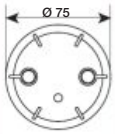	**AP00083..R****	52,10		**AP0008500R anterior a 2020/** before 2020	33,50
			**A27L018000**	Blanco / White	-					**AP0009500R posterior a 2020/** after 2020	2,29

Rectangulares / Rectangulars

		Desagüe / Drain	€		Tapeta / Cover		€		Tubo Inmersión Immersion tube	€
Helios		**A27L039000**	-		**AP0006410R**	Blanco / White	27,80		**AP0006200R**	42,90
					AP0006481R	Pizarra / Slide	21,20			
					AP0006440R	Negro / Black	17,40			
					AP0006450R	Crema / Cream	26,80			
					AP0006463R	Perla / Pearl	48,30			
Aquos					**A276362000**	1000	-			
					A276361000	900	-			
					A276360000	800	-			
					A276359000	700	-			
				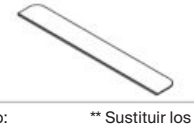	**A276358..0***	1000	-			
					A276357..0*	900	-			
					A276356..0*	900	-			
					A276355..0*	700	-			

* Sustituir los (...) de la referencia por el código del color elegido:
In the product number replace (..) with the code for the choosen colour:
01 Blanco / White **40** Negro / Black **30** Cemento / Cement
20 Pizarra / Slide **09** Blanco roto / Off white **29** Moka / Moka

** Sustituir los (...) de la referencia de la tapeta por el código de color elegido:
In the *** number replace (...) with the code for the choosen colour:
62 Blanco / White **64** Onix / Onix **66** Café / Coffe
63 Cromado / Chromed **65** Beige / Beige

Senceramic®

Cratos

PLATO DUCHA CRATOS / SHOWER TRAY CRATOS	
A3740L0..0	1800x800 mm
A3740L1..0	1800x700 mm
A3740L2..0	1600x800 mm
A3740L3..0	1600x700 mm
A3740L4..0	1400x800 mm
A3740L5..0	1400x700 mm
A3740L6..0	1200x800 mm
A3740L7..0	1200x700 mm
A3740L8..0	1000x800 mm
A3740L9..0	1000x700 mm

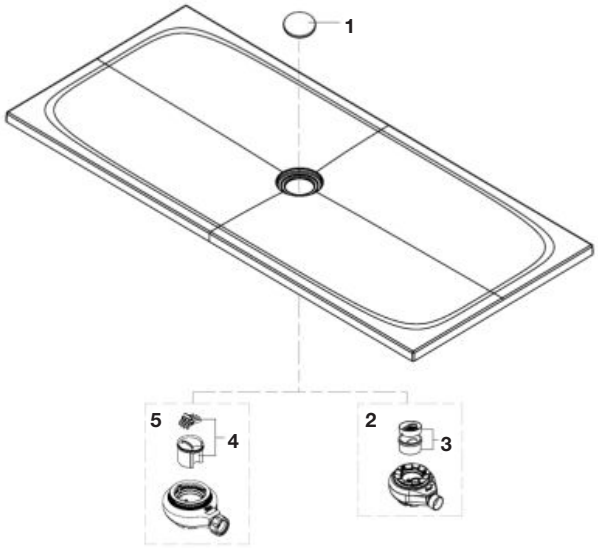

Las últimas posiciones de cada código indican el acabado (color):
The lasts positions indicates the finish (colour):
62 Blanco mate **/** Matt white
63 Perla **/** Pearl
64 Onix **/** Onix
65 Beige **/** Beige
66 Café **/** Coffee

		€
	AP0008362R	52,10
	AP0008363R	52,10
1	**AP0008364R**	52,10
	AP0008365R	52,10
	AP0008366R	52,10
3	**AP0008500R**	33,50
4	**AP0009500R**	2,29

Producto acabado compatible (incluido):
Compatible finished products:

			€
1	**A3890L4..0**	High flow	-
1	**A27L053..0**	Low flow	-
2			-
2	**A27L045000**		-
5	**A27L018000**		-

PLATO DUCHA CRATOS / SHOWER TRAY CRATOS	
A3740LM620	1600x800 mm
A3740LG620	1400x800 mm
A3730LK620	1200x800 mm

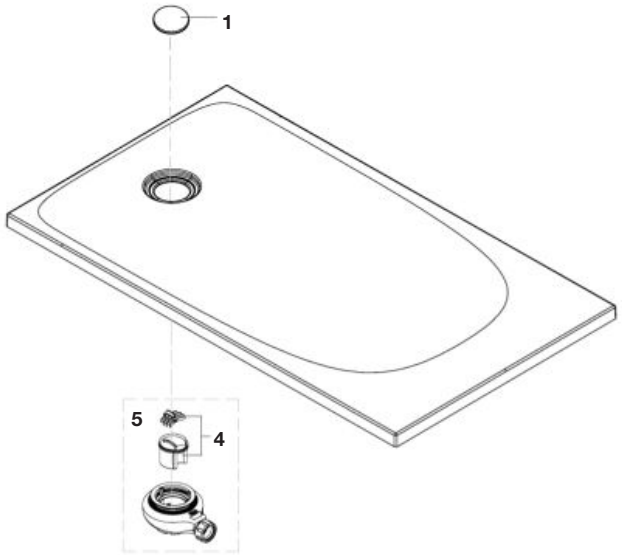

Las últimas posiciones de cada código indican el acabado (color):
The lasts positions indicates the finish (colour):

62 Blanco mate **/** Matt white

		€
1	**AP0008362R**	52,10
4	**AP0009500R**	2,29

Producto acabado compatible (incluido):
Compatible finished products:

		€
5	**A27L018000**	-

Stonex®

Armani / Casa - Colección Baia / Armani / Casa - Collection Baia

PLATO DUCHA ARMANI BAIA DESAGÜE CENTRAL / SHOWERTRAY ARMANI BAIA CENTRAL DRAIN	
AP5107D03E801..0	2000x1000 mm

PLATO DUCHA ARMANI BAIA DESAGÜE LATERAL / SHOWERTRAY ARMANI BAIA SIDE DRAIN	
AP5017D03E801..0	2000x1000 mm
AP5016403E801..0	1600x1000 mm
AP50164032001..0	1600x800 mm
AP5015783E801..0	1400x1000 mm
AP50157832001..0	1400x800 mm
AP5014B032001..0	1200x800 mm

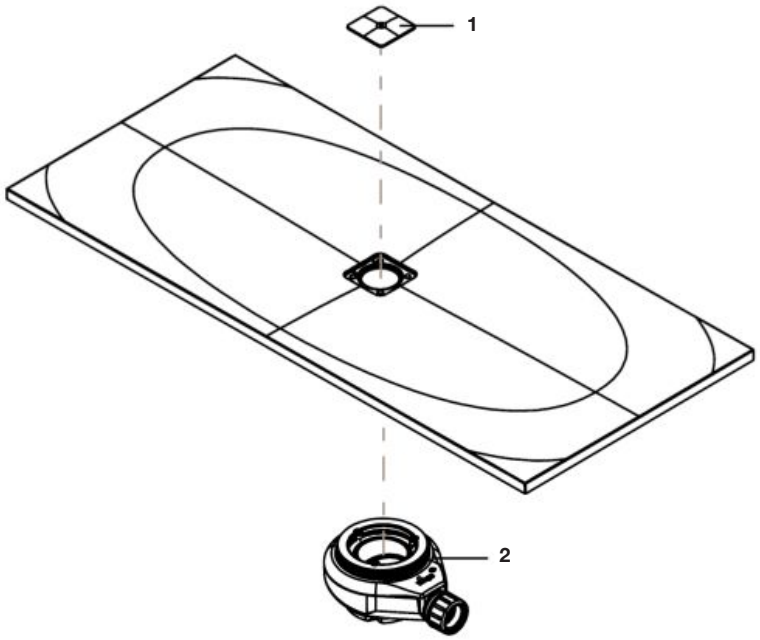

Las últimas posiciones de cada código indican el acabado (color):
The lasts positions indicates the finish (colour):

10 Off White
R3 Greige
R4 Dark Metallic

				€
	AP0008210R	Off White		35,20
1	**AP00082R3R**	Greige		36,20
	AP00082R4R	Dark Metallic		36,20

Producto acabado compatible (incluido):
Compatible finished products:

			€
2	**A27L018000**		-

Stonex®

Aquos

PLATO DUCHA AQUOS / SHOWER TRAY AQUOS	
AP6013E82BC01..0	1000x700 mm
AP6014B02BC01..0	1200x700 mm
AP6015782BC01..0	1400x700 mm
AP6016402BC01..0	1600x700 mm
AP6017082BC01..0	1800x700 mm
AP6017D02BC01..0	2000x700 mm
AP6013E832001..0	1000x800 mm
AP6014B032001..0	1200x800 mm
AP60157832001..0	1400x800 mm
AP60164032001..0	1600x800 mm
AP60170832001..0	1800x800 mm
AP6017D032001..0	2000x800 mm
AP6013E838401..0	1000x900 mm
AP6014B038401..0	1200x900 mm
AP60157838401..0	1400x900 mm
AP60164038401..0	1600x900 mm
AP60170838401..0	1800x900 mm
AP6017D038401..0	2000x900 mm
AP6014B03E801..0	1200x1000 mm
AP6015783E801..0	1400x1000 mm
AP6016403E801..0	1600x1000 mm
AP6017083E801..0	1800x1000 mm
AP6017D03E801..0	2000x1000 mm

	€
Kit reparación Stonex Kit reparation Stonex	
AK00029..R	N.D.
Kit pintura Stonex Kit paint Stonex	
AK00030..R	58,30
Kit manta textura Kit texture blanket	
AK0003200R	3,85

Sólo se muestra el precio del acabado blanco (10)
Only the price of the white finish (10) is shown

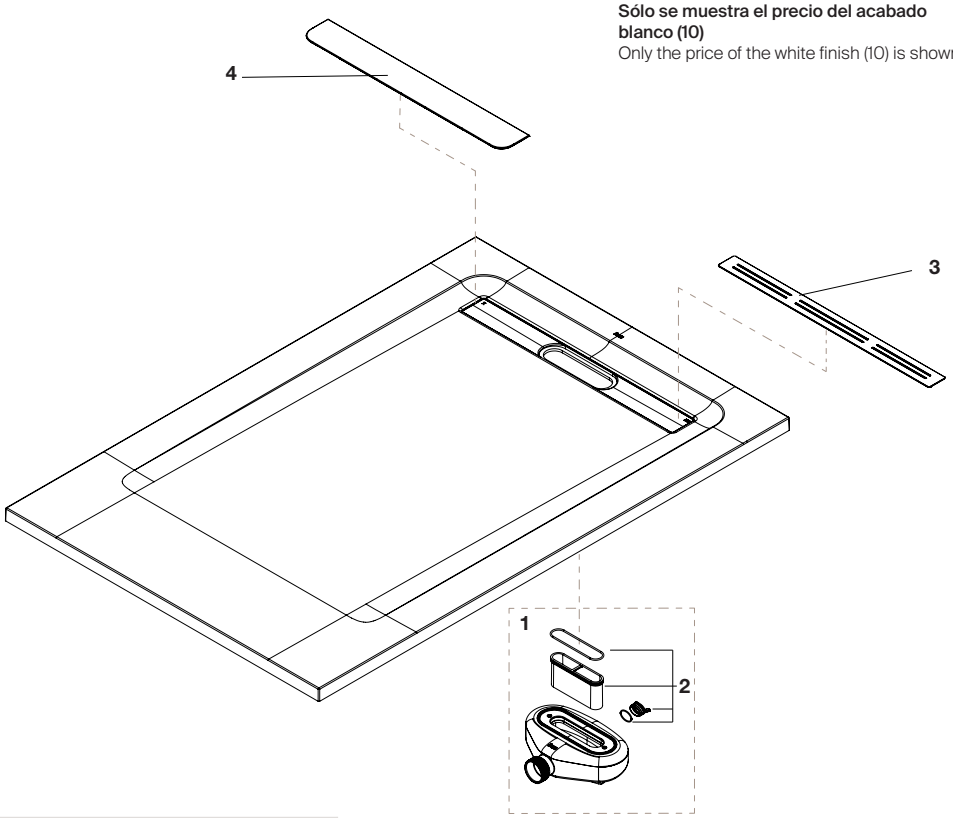

ADMITE (no incluido) / Admits (not included)

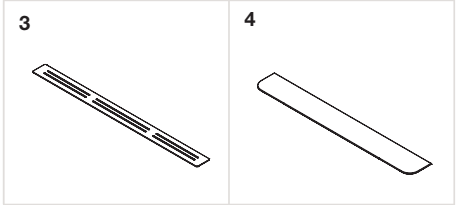

Las últimas posiciones de cada código indican el acabado (color):
The lasts positions indicates the finish (colour):
10 Blanco / White
20 Pizarra / Slide
40 Negro / Black
63 Perla / Pearl
64 Onix / Onix
65 Beige / Beige
66 Café / Coffee

		€
2	**AP0006200R**	42,90

Producto acabado compatible (incluido):
Compatible finished products:

		€
1	**A27L039...**	-

Admite (no incluido):
Admits (not included)

			€
3	**A276359000**	700 mm	-
	A276360000	800 mm	-
	A276361000	900 mm	-
	A276362000	1000 mm	-
4	**A276355..0**	700 mm	-
	A276356..0	800 mm	-
	A276357..0	900 mm	-
	A276358..0	1000 mm	-

Stonex®

Pyros

PLATO DUCHA PYROS / SHOWER TRAY PYROS	
AP9017D03E801..0	2000x1000x34 mm
AP90170838401..0	1800x900x34 mm
AP90164038401..0	1600x900x32 mm
AP90157838401..0	1400x900x30 mm
AP9014B038401..0	1200x900x28 mm
AP9013E838401..0	1000x900x26 mm
AP90170832001..0	1800x800x34 mm
AP90164032001..0	1600x800x32 mm
AP90157832001..0	1400x800x30 mm
AP9014B032001..0	1200x800x28 mm
AP9013E832001..0	1000x800x26 mm
AP9017082BC01..0	1800x700x34 mm
AP9016402BC01..0	1600x700x32 mm
AP9015782BC01..0	1400x700x30 mm
AP9014B02BC01..0	1200x700x28 mm
AP9013E82BC01..0	1000x700x26 mm
AP90138438401..0	900x900x24 mm

Sólo se muestra el precio del acabado blanco (10)
Only the price of the white finish (10) is shown

	€
Kit reparación Stonex Kit reparation Stonex	
AK00029..R	53,30
Kit pintura Stonex Kit paint Stonex	
AK00030..R	58,30
Kit manta textura Kit texture blanket	
AK0003400R	3,85

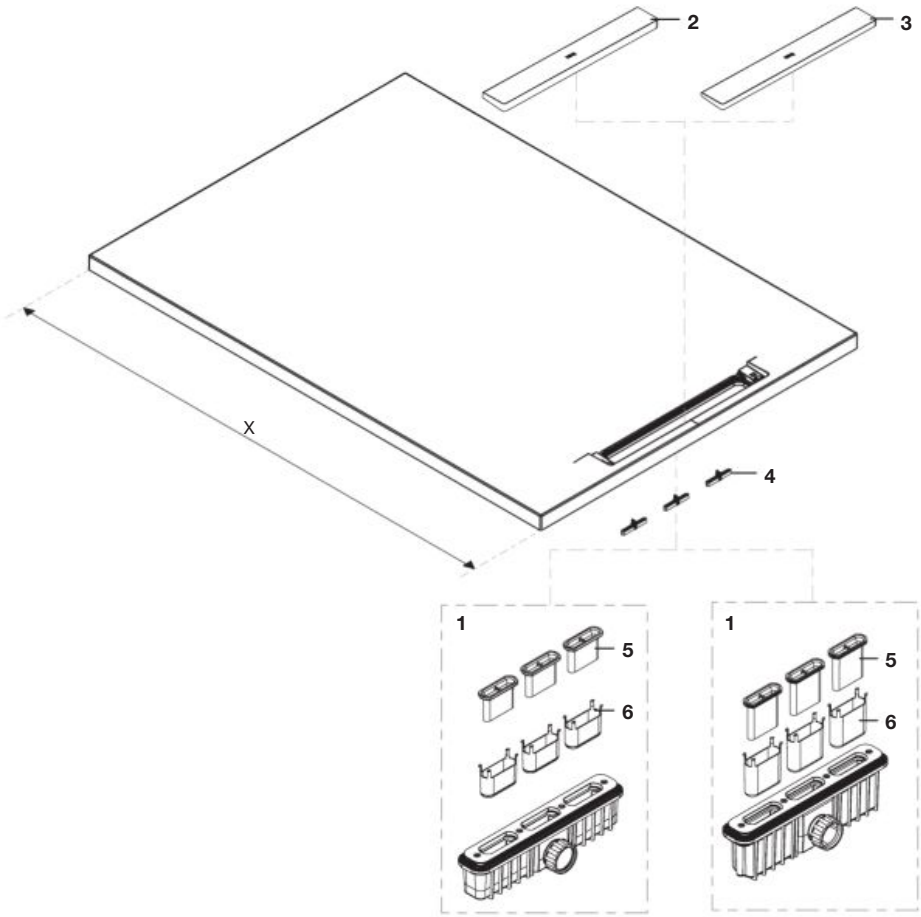

Las últimas posiciones de cada código indican el acabado (color):
The lasts positions indicates the finish (colour):
10 Blanco / White
20 Pizarra / Slide
40 Negro / Black
63 Perla / Pearl
64 Onix / Onix
65 Beige / Beige
66 Café / Coffee

				€
1	**A27L065000**	30 mm		-
	A27L072000	50 mm		-
2	**AP0009710R**	X ≥ 1600		92,60
	AP0009720R			69,40
	AP0009740R			69,40
	AP0009763R			70,30
	AP0009764R			70,30
	AP0009765R			70,30
	AP0009766R			70,20

				€
3	**AP0011510R**	X < 1600		96,70
	AP0011520R			70,00
	AP0011540R			70,20
	AP0011563R			70,50
	AP0011564R			70,30
	AP0011565R			70,50
	AP0011566R			70,30
4 3 un	**AP0009800R**			2,82

			€
5 3 un	**AP0009900R**	30 mm	3,53
	AP0011300R	50 mm	2,91
6 3 un	**AP0010000R**	30 mm	2,82
	AP0011400R	50 mm	2,41

Stonex®

Helios

PLATO DUCHA HELIOS / SHOWER TRAY HELIOS	
AP2013E82BC01..0	1000x700 mm
AP2013E832001..0	1000x800 mm
AP2013E838401..0	1000x900 mm
AP2014B02BC01..0	1200x700 mm
AP2014B032001..0	1200x800 mm
AP2014B038401..0	1200x900 mm
AP2015782BC01..0	1400x700 mm
AP20157832001..0	1400x800 mm
AP20157838401..0	1400x900 mm
AP2016402BC01..0	1600x700 mm
AP20164032001..0	1600x800 mm
AP20164038401..0	1600x900 mm

	€
Kit reparación Stonex Kit reparation Stonex	
AK00029..R	53,30
Kit pintura Stonex Kit paint Stonex	
AK00030..R	58,30
Kit manta textura Kit texture blanket	
AK0003300R	3,85

Sólo se muestra el precio del acabado blanco (10)
Only the price of the white finish (10) is shown

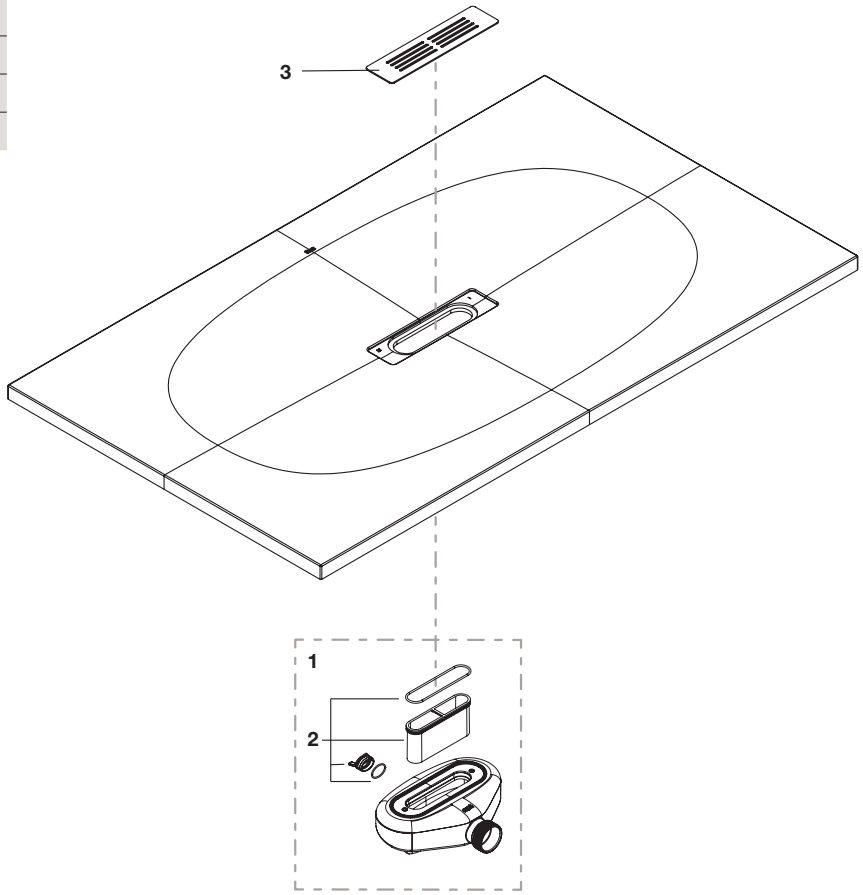

Las últimas posiciones de cada código indican el acabado (color):
The lasts positions indicates the finish (colour):
10 Blanco / White
20 Pizarra / Slide
40 Negro / Black
50 Crema / Cream
63 Perla / Pearl
64 Onix / Onix
65 Beige / Beige
66 Café / Coffee
80 Decapado claro / Light aged wood
81 Decapado oscuro / Aged wood

			€
2	**AP0006200R**		42,90
3	**AP0006410R**	Blanco / White	27,80
	AP0006481R	Pizarra / Slate	21,20
	AP0006440R	Negro / Black	17,40
	AP0006450R	Crema / Cream	26,80
	AP0006463R	Perla / Pearl	48,30
	AP0006464R	Onix / Onix	48,30
	AP0006465R	Beige / Beige	48,30
	AP0006466R	Café / Coffee	48,30

Producto acabado compatible (incluido):
Compatible finished products:

		€
1	**A27L039...**	-

Stonex®

Terran Original

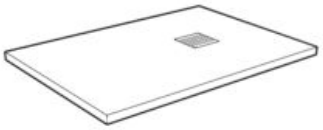

PLATO DUCHA TERRAN RECTANGULAR KING SIZE (SIN MARCO) / RECTANGULAR SHOWER TRAYS TERRAN KING SIZE (WITHOUT FRAME)	
AP1017D03E801..0	2000x1000 mm
AP10164057801..0	1600x1400 mm
AP1017D057801..0	2000x1400 mm

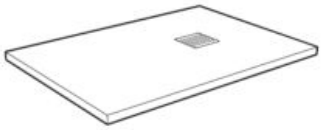

PLATO DUCHA TERRAN RECTANGULAR (SIN MARCO) / RECTANGULAR SHOWER TRAYS TERRAN (WITHOUT FRAME)	
AP1013E82BC01..0	1000x700 mm
AP1014B02BC01..0	1200x700 mm
AP1015782BC01..0	1400x700 mm
AP1015DC2BC01..0	1500x700 mm
AP1016402BC01..0	1600x700 mm
AP1016A42BC01..0	1700x700 mm
AP1017082BC01..0	1800x700 mm
AP1013E82EE01..0	1000x750 mm
AP1014B02EE01..0	1200x750 mm
AP1015782EE01..0	1400x750 mm
AP1016402EE01..0	1600x750 mm
AP1017082EE01..0	1800x750 mm
AP1013E832001..0	1000x800 mm
AP1014B032001..0	1200x800 mm
AP10157832001..0	1400x800 mm
AP10164032001..0	1600x800 mm
AP10170832001..0	1800x800 mm
AP1013E838401..0	1000x900 mm
AP1014B038401..0	1200x900 mm
AP10157838401..0	1400x900 mm
AP10164038401..0	1600x900 mm
AP10170838401..0	1800x900 mm
AP1014B03E801..0	1200x1000 mm
AP1015783E801..0	1400x1000 mm
AP1016403E801..0	1600x1000 mm
AP1017083E801..0	1800x1000 mm

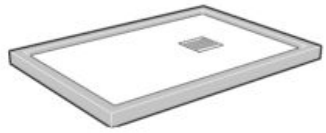

PLATO DUCHA TERRAN RECTANGULAR (CON MARCO) / RECTANGULAR SHOWER TRAYS TERRAN (WITH FRAME)	
AP1023E82BC41..0	1000x700 mm
AP1024B02BC41..0	1200x700 mm
AP1025782BC41..0	1400x700 mm
AP1026402BC41..0	1600x700 mm
AP1027082BC41..0	1800x700 mm
AP1023E82EE41..0	1000x750 mm
AP1024B02EE41..0	1200x750 mm
AP1025782EE41..0	1400x750 mm
AP1026402EE41..0	1600x750 mm
AP1027082EE41..0	1800x750 mm
AP1023E832041..0	1000x800 mm
AP1024B032041..0	1200x800 mm
AP10257832041..0	1400x800 mm
AP10264032041..0	1600x800 mm
AP10270832041..0	1800x800 mm
AP1023E838441..0	1000x900 mm
AP1024B038441..0	1200x900 mm
AP10257838441..0	1400x900 mm
AP10264038441..0	1600x900 mm
AP10270838441..0	1800x900 mm

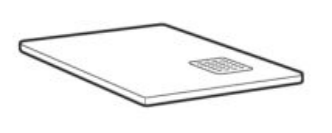

PLATO DUCHA TERRAN CUADRADO (SIN MARCO / SQUARE SHOWER TRAYS TERRAN (WITHOUT FRAME)	
AP10332032001..0	800x800 mm
AP10338438401..0	900x900 mm
AP1033E83E801..0	1000x1000 mm



PLATO DUCHA TERRAN ANGULAR (SIN MARCO) / ANGULAR SHOWER TRAYS TERRAN (WITHOUT FRAME)	
AP10538438401..0	900x900

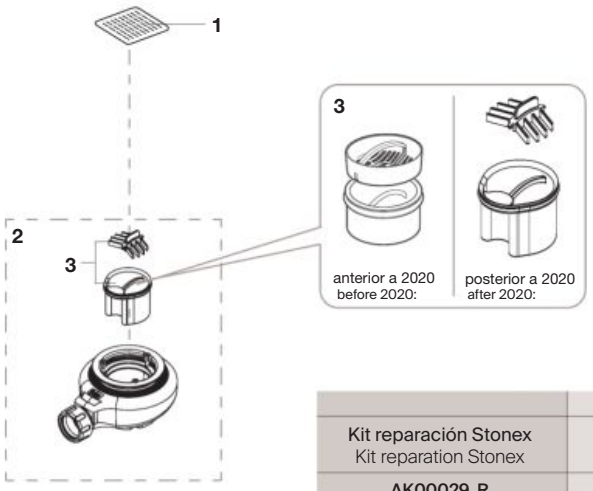

Las últimas posiciones de cada código indican el acabado (color):
The lasts positions indicates the finish (colour):
10 Blanco / White
20 Pizarra / Slate
40 Negro / Black
63 Perla / Pearl
64 Onix / Onix
65 Beige / Beige
66 Café / Coffee

			€
1	**AP0006100R**		10,20
3	**AP0008500R**	anterior a 2020 / before 2020	33,50
3	**AP0009500R**	posterior a 2020 / after 2020	2,29

Producto acabado compatible (incluido):
Compatible finished products:

		€
2	**A27L018000**	-

	€
Kit reparación Stonex Kit reparation Stonex	
AK00029..R	53,30
Kit pintura Stonex Kit paint Stonex	
AK00030..R	58,30
Kit manta textura Kit texture blanket	
AK0003200R	3,85

Sólo se muestra el precio del acabado blanco (10)
Only the price of the white finish (10) is shown

Stonex®

Terran

NUEVOS PLATOS DE DUCHA TERRAN NEW SHOWER TRAYS TERRAN	
APA0170838401..0	1800 x 900 x 33
APA0164038401..0	1600 x 900 x 32
APA0157838401..0	1400 x 900 x 30
APA014B038401..0	1200 x 900 x 29
APA013E838401..0	1000 x 900 x 26
APA0170832001..0	1800 x 800 x 33
APA016A432001..0	1700 x 800 x 33
APA0164032001..0	1600 x 800 x 32
APA0157832001..0	1400 x 800 x 30
APA014B032001..0	1200 x 800 x 29
APA013E832001..0	1000 x 800 x 26
APA017082EE01..0	1800 x 750 x 33
APA016402EE01..0	1600 x 750 x 32
APA015782EE01..0	1400 x 750 x 30
APA014B02EE01..0	1200 x 750 x 29
APA013E82EE01..0	1000 x 750 x 26
APA017082BC01..0	1800 x 700 x 33
APA016A42BC01..0	1700 x 700 x 33
APA016402BC01..0	1600 x 700 x 32
APA015DC2BC01..0	1500 x 700 x 32
APA015782BC01..0	1400 x 700 x 31
APA014B02BC01..0	1200 x 700 x 29
APA013E82BC01..0	1000 x 700 x 26

NUEVOS PLATOS DE DUCHA TERRAN RECTANGULAR KING SIZE NEW RECTANGULAR SHOWER TRAYS TERRAN KING SIZE	
APA017D03E801..0	2000x1000x34

NUEVOS PLATOS DE DUCHA TERRAN CUADRADO NEW SQUARE SHOWER TRAYS TERRAN	
APA0138438401..0	2000x1000x34
APA0132032001..0	2000x1000x34

	€
Kit reparación Stonex Kit reparation Stonex	
AK00029..R	53,30
Kit pintura Stonex Kit paint Stonex	
AK00030..R	58,30
Kit manta textura Kit texture blanket	
AK0003600R	3,85

Sólo se muestra el precio del acabado blanco (10)
Only the price of the white finish (10) is shown

Las últimas posiciones de cada código indican el acabado (color):
The lasts positions indicates the finish (colour):
10 Blanco / White
20 Pizarra / Slide
40 Negro / Black
63 Perla / Pearl
64 Onix / Onix
65 Beige / Beige
66 Café / Coffee

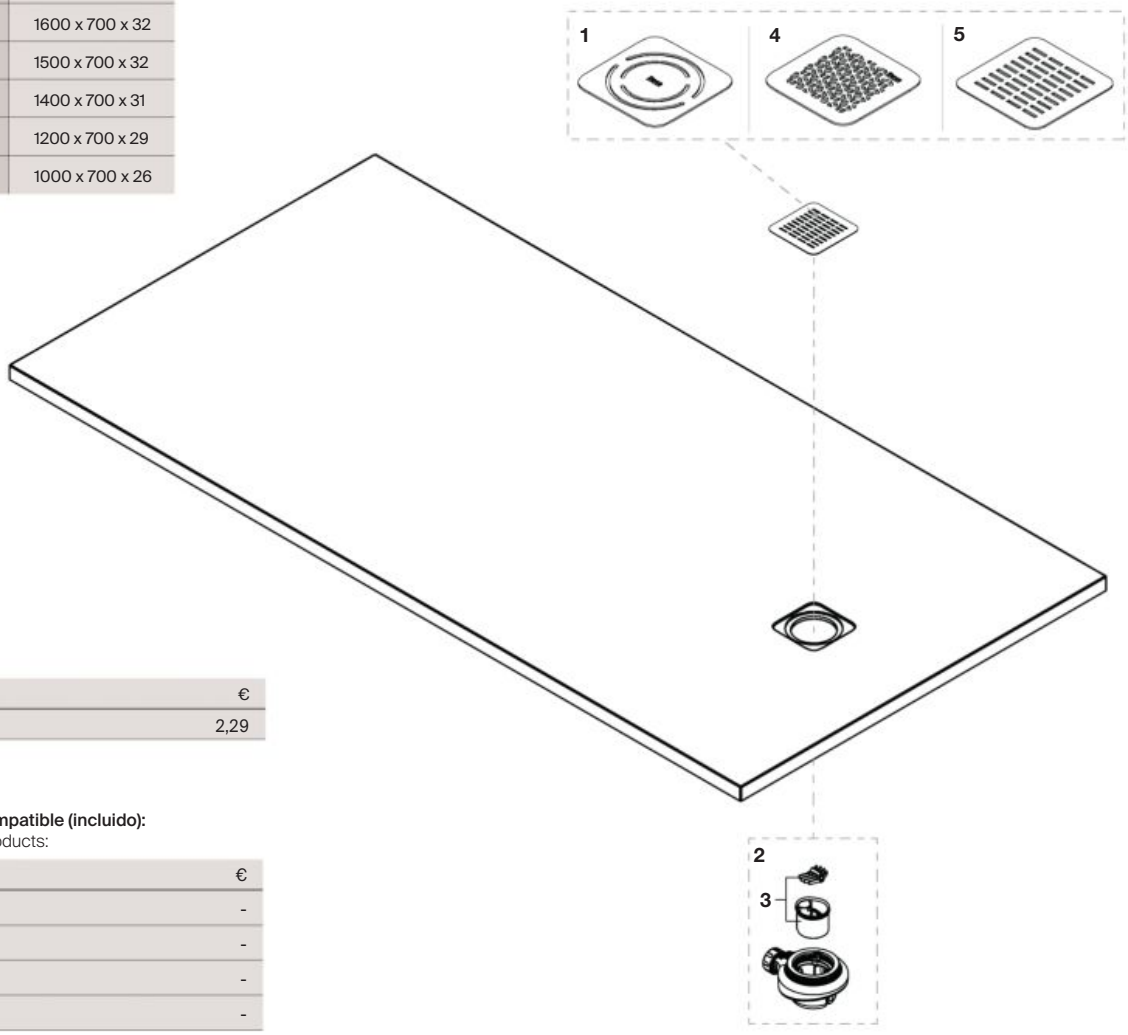

		€
3	**AP0009500R**	2,29

Producto acabado compatible (incluido):
Compatible finished products:

		€
1	**A276513C10**	-
2	**A27L018000**	-
4	**A276511..0**	-
5	**A276514..0**	-

Acrílicos / Acrylics

Neo Daiquiri

PLATOS DE DUCHA NEO DAIQUIRI SHOWER TRAYS NEO DAIQUIRI		
Sin antideslizante Without anti-slip	**Blanco antideslizante** Anti-slip white	
A276167910	**A276166000**	1800 x 800 mm
A276323910	**A276302000**	1400 x 800 mm
A276183910	**A276182000**	1200 x 800 mm
A276187910	**A276186000**	1000 x 800 mm
A276169910	**A276168000**	1700 x 750 mm
A276173910	**A276172000**	1600 x 750 mm
A276177910	**A276176000**	1500 x 750 mm
A276209910	**A276208000**	1200 x 750 mm
A276191910	**A276190000**	900 x 750 mm
A276171910	**A276170000**	1700 x 700 mm
A276175910	**A276174000**	1600 x 700 mm
A276179910	**A276178000**	1500 x 700 mm
A276181910	**A276180000**	1400 x 700 mm
A276185910	**A276184000**	1200 x 700 mm
A276189910	**A276188000**	1000 x 700 mm
A276193910	**A276192000**	900 x 700 mm

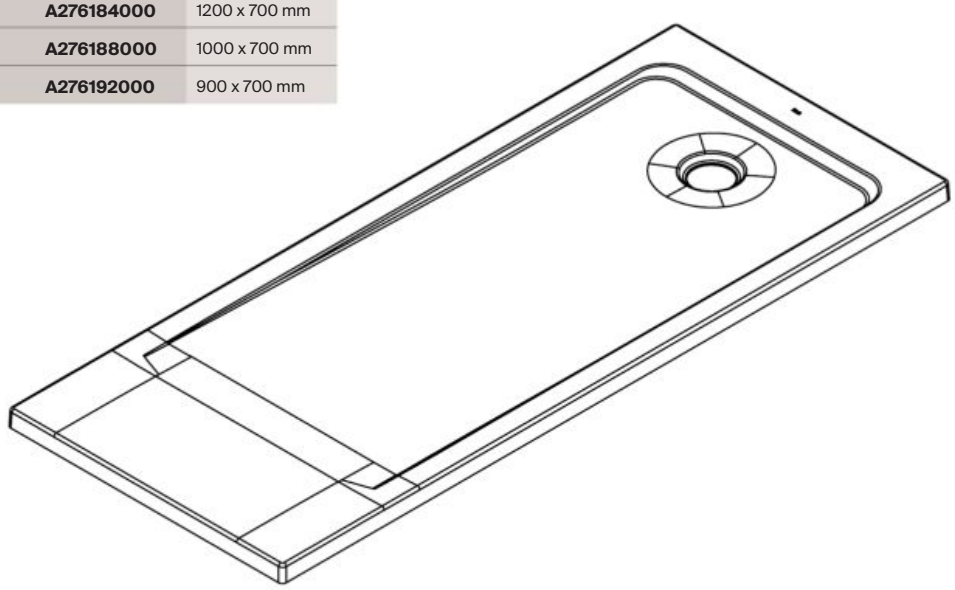

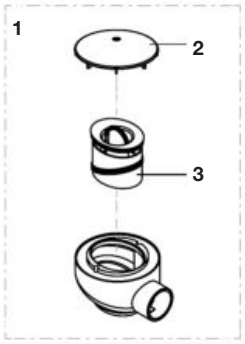

			€
1	**AP0005400R**	Cromado / Chrome	45,30
	AP0006600R	Blanco antideslizante / Anti-slip white	59,90
	AP0006619R	Sin antideslizante / Without anti-slip	-
2	**AP0005300R**	Cromado / Chrome	22,60
	AP0006500R	Blanco antideslizante / Anti-slip white	50,20
	AP0006591R	Sin antideslizante / Without anti-slip	37,00
3	**AP0006300R**		18,50

Acrílicos / Acrylics

Granada

PLATOS DE DUCHA GRANADA SHOWER TRAYS GRANADA	
A276345000	1400 x 900 mm
A276342000	1200 x 900 mm
A276339000	1000 x 900 mm
A276266001	1400 x 800 mm
A276265000	1200 x 800 mm
A276264000	1000 x 800 mm
A276256000	900 x 900 mm
A276254000	800 x 800 mm

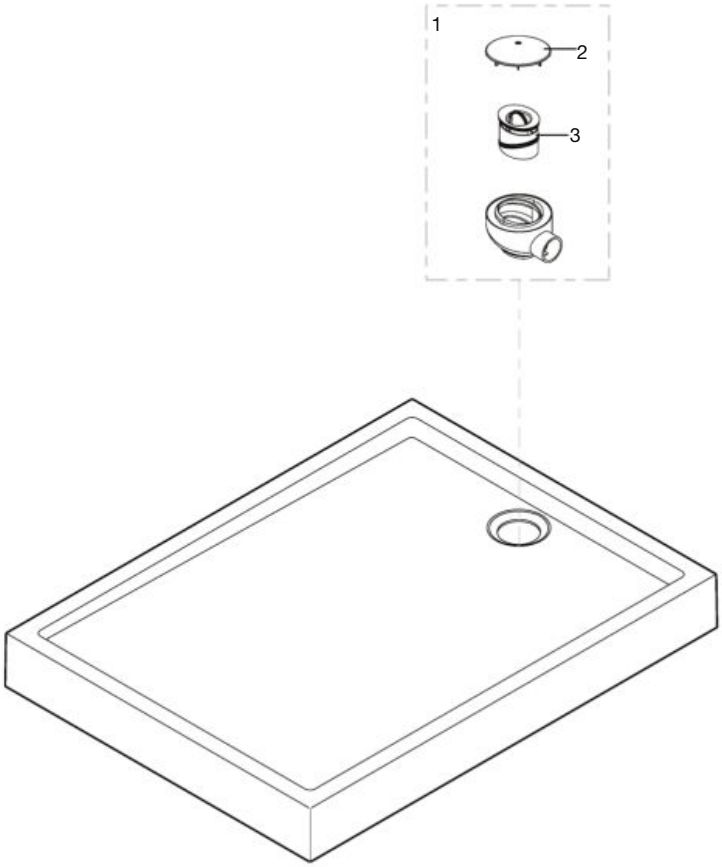

Admite (no incluido):
Admits (not included)

		€
1	**AP0005400R**	45,30
2	**AP0005300R**	22,60
3	**AP0006300R**	18,50

Granada

PLATOS DE DUCHA GRANADA ANGULAR SHOWER TRAYS GRANADA	
A276260000	900 x 900 mm

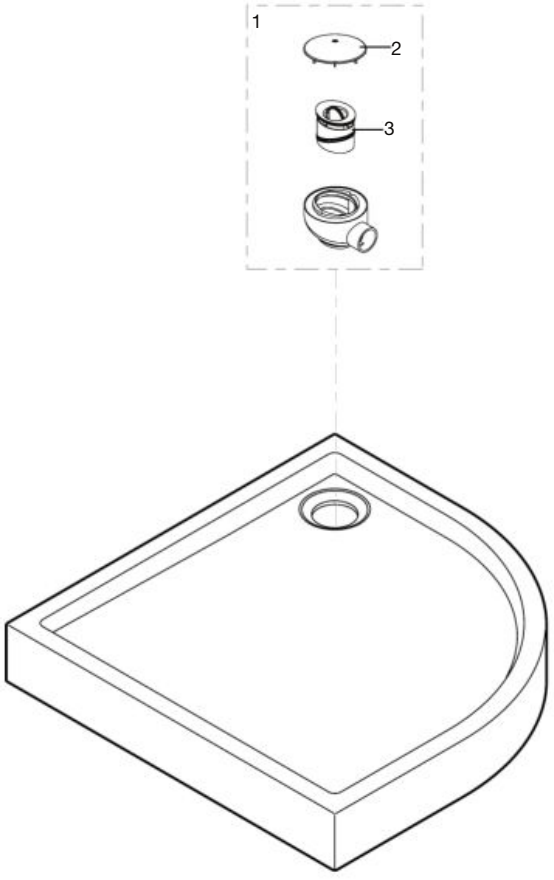

Admite (no incluido):
Admits (not included)

		€
1	**AP0005400R**	45,30
2	**AP0005300R**	22,60
3	**AP0006300R**	18,50

Porcelana / Vitreous China

Armani / Casa - Colección Island / Armani / Casa - Colection Island

PLATO DUCHA ARMANI ISLAND/ SHOWER TRAY ARNANI ISLAND	
A373761..0	1300x950 mm
A373763..0	1100x800 mm

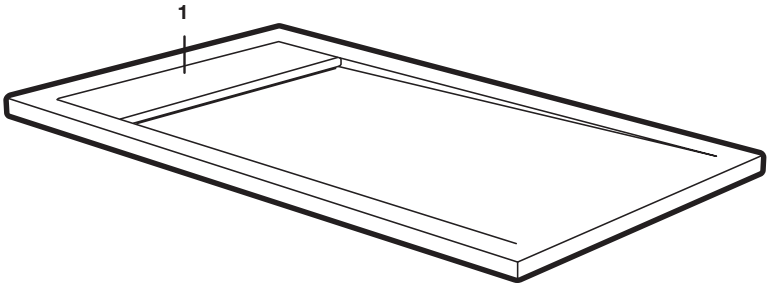

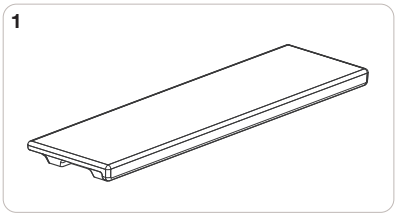

ADMITE (no incluido) / Admits (not included)

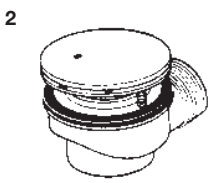

Las últimas posiciones de cada código indican el acabado (color):
The lasts positions indicates the finish (colour):
00 White
R3 Greige
R5 Nero

				€
1	**AP0003200R**	1300	White	55,60
	AP00032R6R		Shagreen	55,60
	AP00032R3R		Greige	55,60
	AP00032R5R		Nero	55,60
	AP0003300R	1100	White	45,80
	AP00033R6R		Shagreen	45,80
	AP00033R3R		Greige	45,80
	AP00033R5R		Nero	45,80

Producto acabado compatible:
Compatible finished products:

			€
2	**A506404400**	Ø90	-

Porcelana / Vitreous China

Malta

PLATO DUCHA MALTA / SHOWER TRAY MALTA	
A37450E000	900x700 mm
A37450D000	1000x700 mm
A37450C000	1200x700 mm
A373506000	1000x750 mm
A373505000	1200x750 mm
A373517000	1000x800 mm
A373516000	1200x800 mm

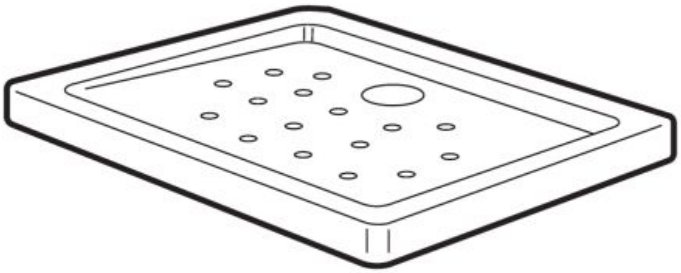

ADMITE (no incluido) / ADMITS (not included)		
1	**2**	**3**
		

PLATO DUCHA MALTA ANGULAR / ANGULAR SHOWER TRAY MALTA	
A37450B000	900x900 mm
A37450A000	1000x1000 mm

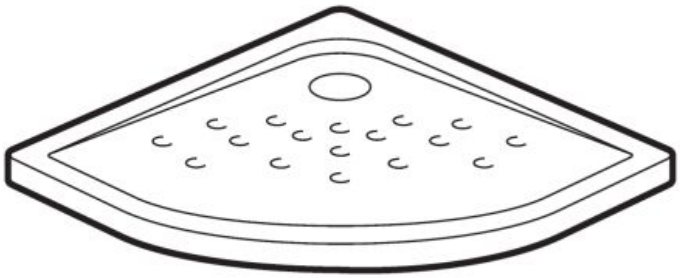

Admite (no incluido):
ADMITS (not included)

		€
1	**AP0005400R**	45,30
2	**AP0005300R**	22,60
3	**AP0006300R**	18,50

Sistemas In-Drain / In-Drain Systems

In-Drain Channel

X1-X2	**A276089000**	650
	A276090000	750
	A276153000	850
	A276091000	950
	A276114000	650
	A276115000	750
	A276152000	850
	A276011600	950

Roca, Armani / Roca

X3	**A276128000**	650
	A276129000	750
	A276130000	850
	A276131000	950
	A276144000	650
	A276145000	750
	A276146000	850
	A276147000	950

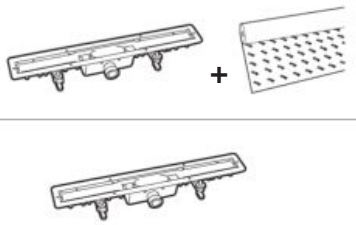

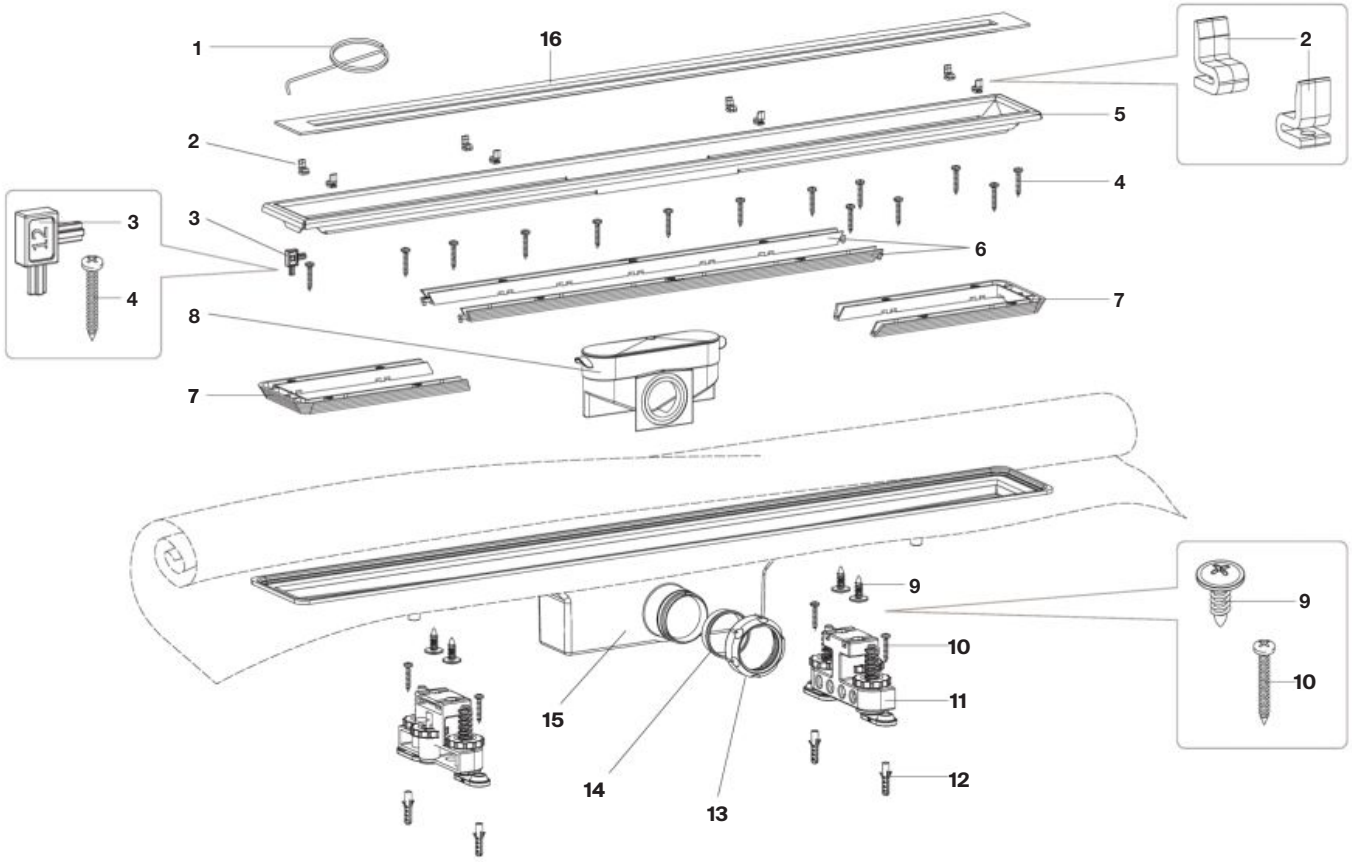

					€
1		**AP0000300R**			5,17
2	8 un		X1-X2		
3	16 un	**AP0000400R**	X1-X2		17,40
4	26 un				
5		**AP0000500R**	X1-X2	650 mm	107,00
		AP0000600R	X1-X2	750 mm	114,00
		AP0000700R	X1-X2	850 mm	123,00
		AP0000800R	X1-X2	950 mm	135,00
		AP0002700R	X3	650 mm	134,00
		AP0002800R	X3	750 mm	143,00
		AP0002900R	X3	850 mm	162,00
		AP0003000R	X3	950 mm	171,00

				€
6 + 7	2 un 2 un	**AP0000900R**	650 mm	11,90
		AP0001000R	750 mm	13,10
		AP0001100R	850 mm	14,00
		AP0001200R	950 mm	14,90
8		**AP0001300R**		17,30
9	4 un	**AP0001400R**		19,70
10	4 un			
11	2 un			
12	4 un			
13				
14				

				€
15 +		**AP0001500R**	650 mm	185,00
		AP0001600R	750 mm	189,00
		AP0001700R	850 mm	203,00
		AP0001800R	950 mm	214,00
16		**AP0002300R**	X3 650 mm	73,60
		AP0002400R	X3 750 mm	80,50
		AP0002500R	X3 850 mm	90,80
		AP0002600R	X3 950 mm	105,00

Sistemas In-Drain / In-Drain Systems

In-Drain Basic

A276305000	650 mm
A276306000	750 mm
A276307000	850 mm
A276308000	9 0 mm

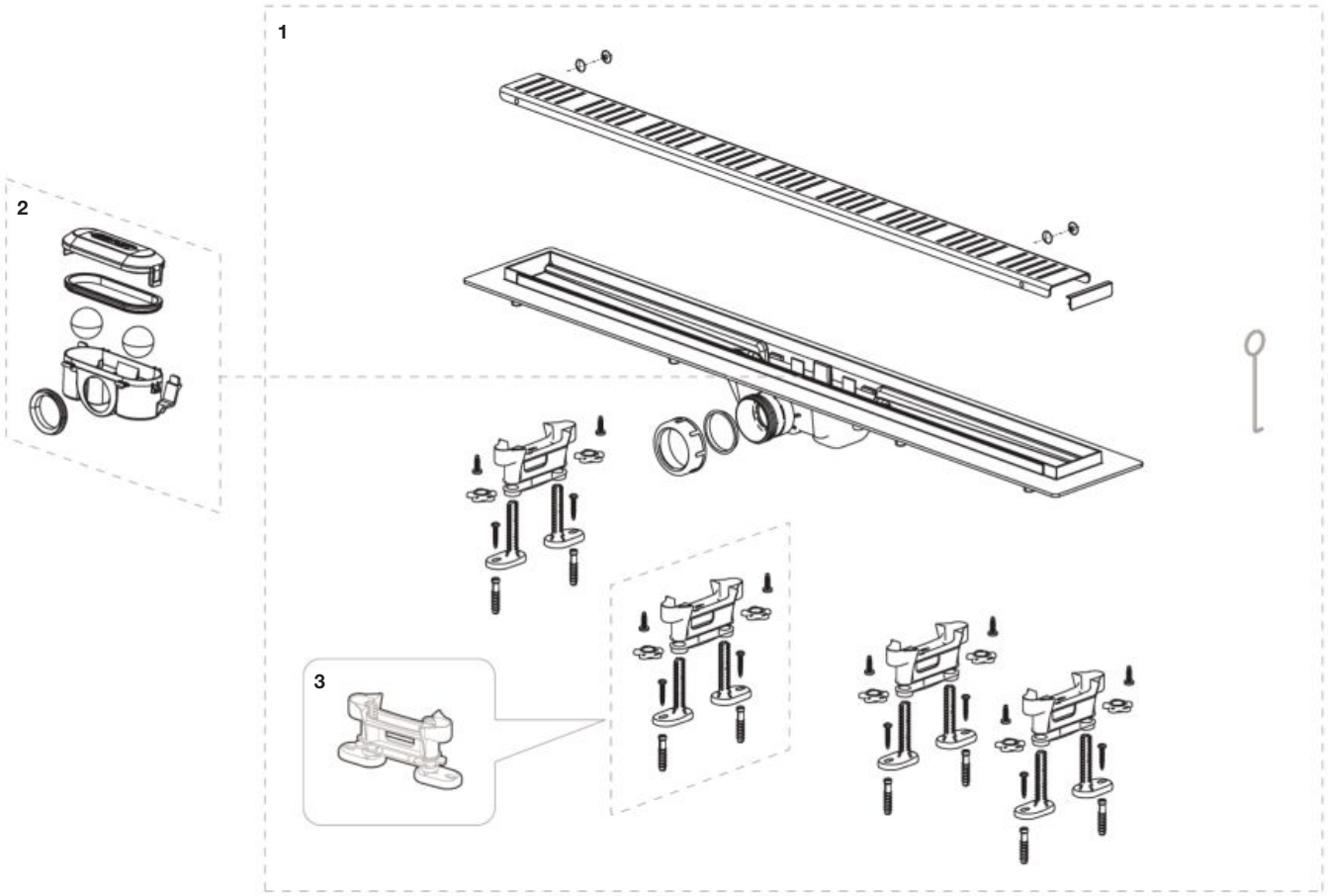

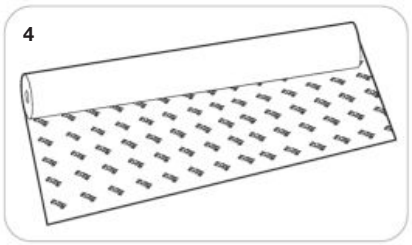

				€
1		**AP0010200R**	650 mm	330,00
		AP0010300R	750 mm	367,00
		AP0010400R	850 mm	385,00
		AP0010500R	950 mm	406,00
2		**AP0010600R**		33,30
3	4 un	**AP0011200R**		58,50

Producto acabado compatible:
Compatible finished products:

				€
4		**A276113000**	2000 x 1500 mm	-

Marcos de instalación / Installation frames

Para Pyros / For Pyros

MARCOS DE INSTALACIÓN PARA PYROS / PYROS INSTALLATION FRAMES	
A276530000	1800-1400 X 700
A276529000	1400-1000 X 700
A276534000	1800-1400 X 800
A276533000	1400-1000 X 800
A276532000	1000-600 X 900
A276536000	1800-1400 X 900
A276535000	1400-1000 X 900

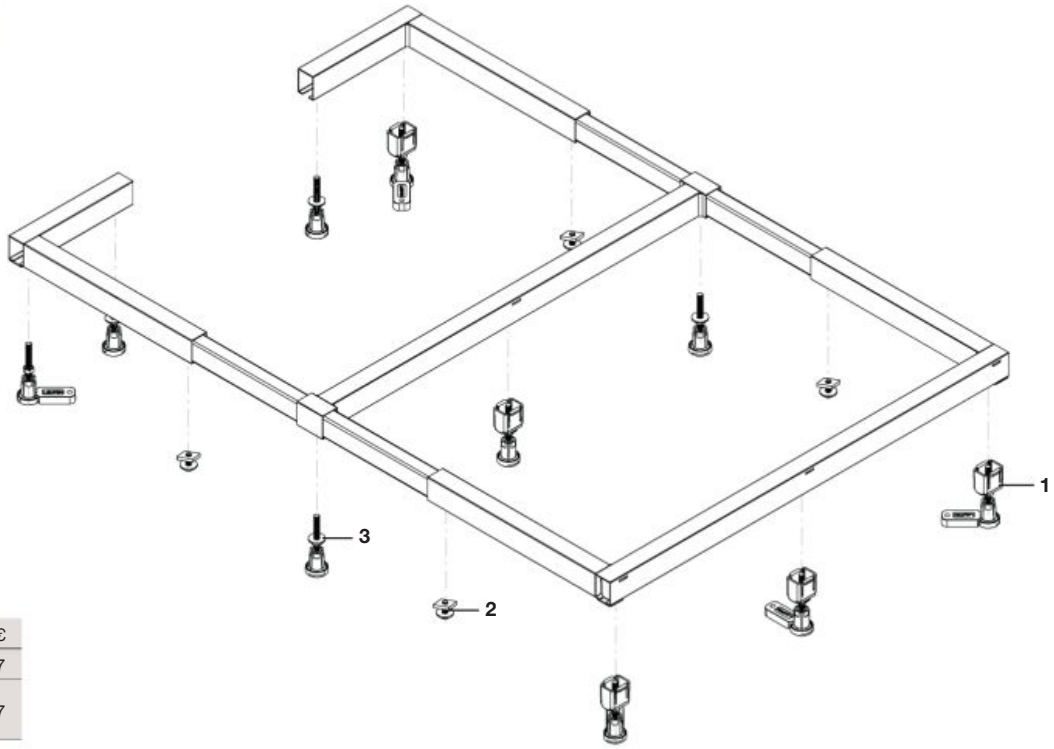

		€
1	**AP0011600R**	4,17
2 3	**AP0011700R**	3,17

Para otros platos de ducha / For other shower trays

MARCOS DE INSTALACIÓN PARA PLATOS DE DUCHA / SHOWER TRAYS INSTALLATION FRAMES	
A276517000	1800-1400 X 700
A276516000	1400-1000 X 700
A276518000	1800-1400 X 750
A276521000	1800-1400 X 800
A276520000	1400-1000 X 800
A276519000	800-600 X 800
A276524000	1800-1400 X 900
A276523000	1400-1000 X 900
A276527000	1800-1400 X 1000
A276526000	1400-1000 X 1000

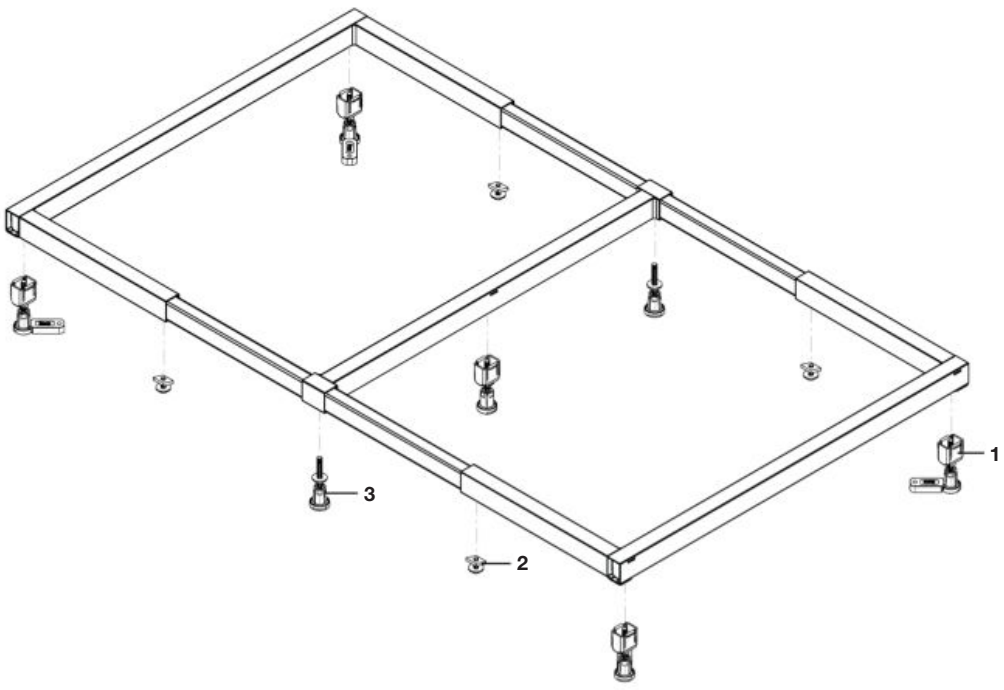

		€
1	**AP0011600R**	4,17
2 3	**AP0011700R**	3,17

Mamparas /
Shower enclosures


LINE

Mamparas / Shower enclosures

52 **Line**

60 **Brisa**

69 **Mistral**

71 **Naray**

81 **Ura-N**

91 **Ura**

104 **Ura (Old)**

111 **Victoria Plus**

118 **Victoria-N**

130 **Victoria**

143 **Easy Express**

Perfiles suplementarios / Supplementary frames


LINE

Line

Line DF

AM30A...	6 mm
AM30B...	8 mm
AM30C...	10 mm

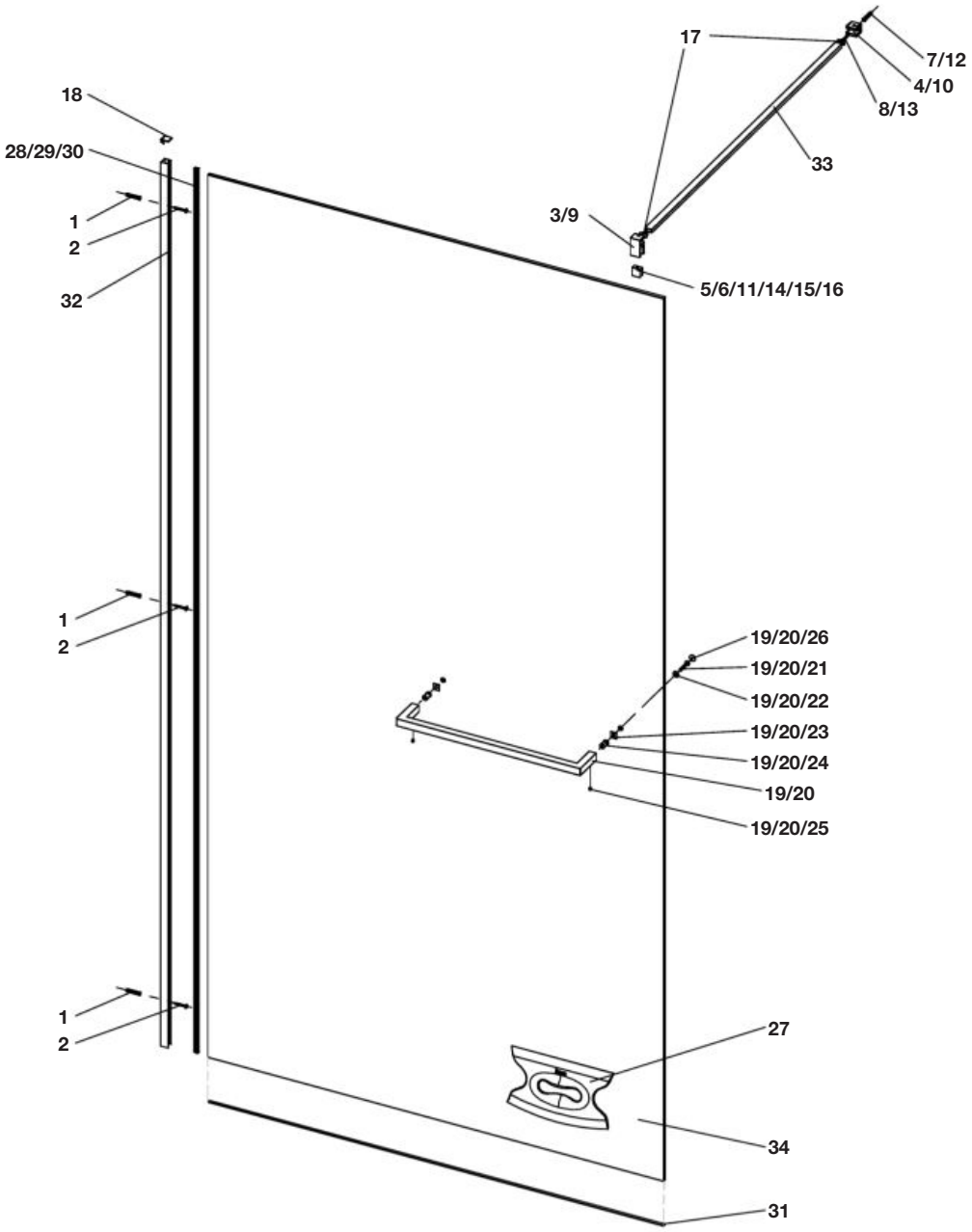

Line

Line DF

Sustituir (Y) de la referencia de producto por el código de color elegido:
2 Plata brillo
6 Negro mate
7 Oro cepillado
8 Blanco mate
A Acero inoxidable cepillado

			€
1	4 un	**AM99262900**	10,30
2	4 un		
3		**AM9940110Y**	136,00
4			
5			
6			
7			
8			
9		**AM9940120Y**	128,00
10			
11			
12			
13			
14		**AM99401300**	94,40
15			
16			
17	2 un		
18		**AM99401500**	74,10
19		**AM9944020Y**	283,00
20		**AM9944030Y**	250,00
21	2 un	**AM99440400**	-
22	2 un		
23	2 un		
24	2 un		
25	2 un		

				€
26	4 un	**AM99402600**		65,40
27		**AM99225900**		23,40
28		**AM99403700**		77,70
29		**AM99403800**		76,70
30		**AM99403900**		76,00
31		**AM99404200**		73,30
32		**AM9940500Y**		106,00
33		**AM9940520Y**		84,30
34		**AMA9WM...19980..**	6 mm	-
		AMAAIM...19980..	8 mm	-
		AMAAJM...19980..	10 mm	-
		AML9YM...19980..	Izq. / left 6 mm toallero / towel rack 700	-
		AMR9YM...19980..	Der. / right 6 mm toallero / towel rack 700	-
		AML9XM...19980..	Izq. / left 6 mm toallero / towel rack 400	-
		AMR9XM...19980..	Der. / right 6 mm toallero / towel rack 400	-
		AMLAMM...19980..	Izq. / left 8 mm toallero / towel rack 700	-
		AMRAMM...19980..	Der. / right 8 mm toallero / towel rack 700	-
		AMLAKM...19980..	Izq. / left 8 mm toallero / towel rack 400	-
		AMRAKM...19980..	Der. / right 8 mm toallero / towel rack 400	-
		AMLANM...19980..	Izq. / left 10 mm toallero / towel rack 700	-
		AMRANM...19980..	Der. / right 10 mm toallero / towel rack 700	-
		AMLALM...19980..	Izq. / left 10 mm toallero / towel rack 400	-
		AMRALM...19980..	Der. / right 10 mm toallero / towel rack 400	-

Sólo se muestra el precio del acabado plata /
Only the price of the silver finish is shown

Line

Line LF

AM30D...	6 mm
AM30E...	8 mm
AM30F...	10 mm

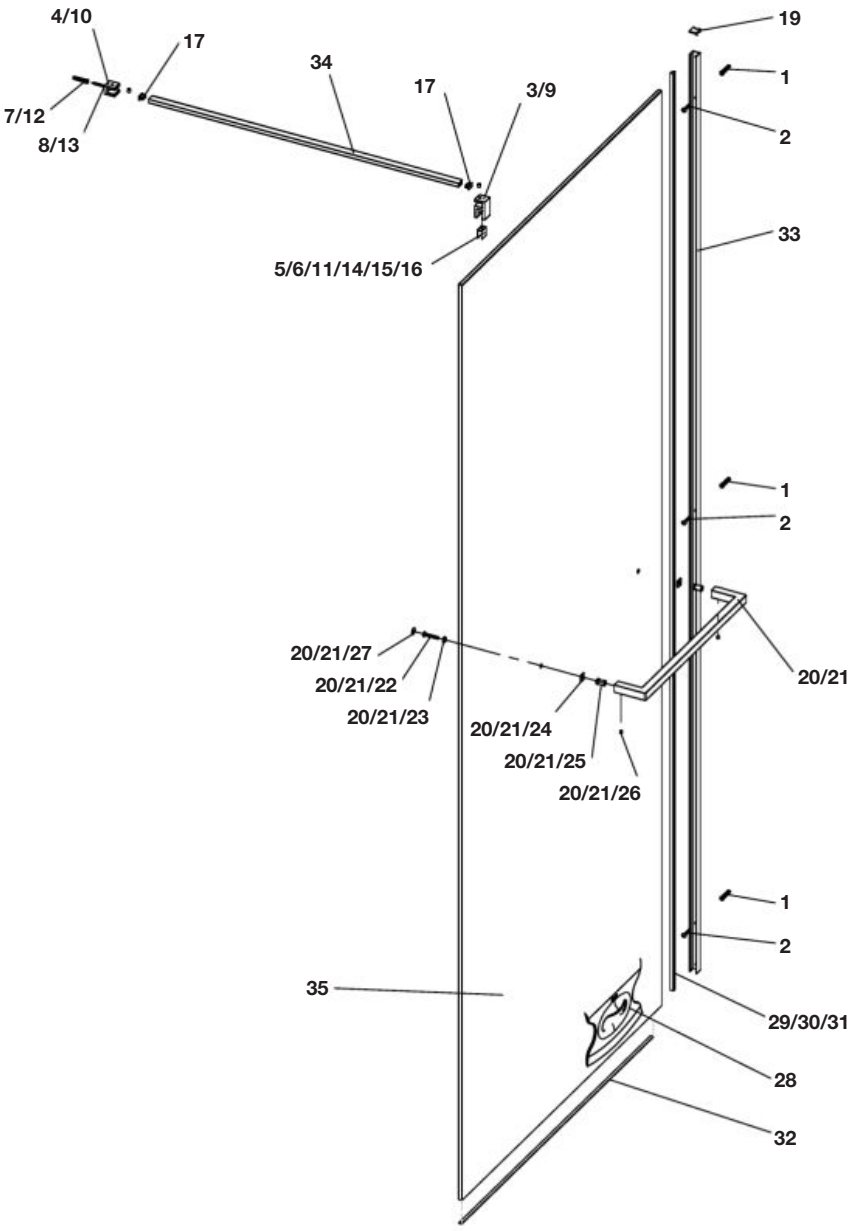

Line

Line LF

Sustituir (Y) de la referencia de producto por el código de color elegido:
2 Plata brillo
6 Negro mate
7 Oro cepillado
8 Blanco mate
A Acero inoxidable cepillado

				€
1	4 un	**AM99262900**		10,30
2	4 un			
3		**AM9940110Y**		136,00
4				
5				
6				
7				
8				
9		**AM9940120Y**		128,00
10				
11				
12				
13				
14		**AM99401300**		94,40
15				
16				
17				
18		**AM9940140Y**		86,30
19	2 un	**AM99401500**		74,10
20		**AM9944020Y**		283,00
21		**AM9944030Y**		250,00
22	2 un	**AM99440400**		-
23	2 un			
24	2 un			
25	2 un			
26	2 un			

				€
27	4 un	**AM99402600**		65,40
28		**AM99225900**		23,40
29		**AM99403700**		77,70
30		**AM99403800**		76,70
31		**AM99403900**		76,00
32		**AM99404200**		73,30
33		**AM9940500Y**		106,00
34		**AM9940520Y**		84,30
35		**AMA9WM...19980..**	6 mm	-
		AMAAIM...19980..	8 mm	-
		AMAAJM...19980..	10 mm	-
		AML9YM...19980..	Izq. / left 6 mm toallero / towel rack 700	-
		AMR9YM...19980..	Der. / right 6 mm toallero / towel rack 700	-
		AML9XM...19980..	Izq. / left 6 mm toallero / towel rack 400	-
		AMR9XM...19980..	Der. / right 6 mm toallero / towel rack 400	-
		AMLAMM...19980..	Izq. / left 8 mm toallero / towel rack 700	-
		AMRAMM...19980..	Der. / right 8 mm toallero / towel rack 700	-
		AMLAKM...19980..	Izq. / left 8 mm toallero / towel rack 400	-
		AMRAKM...19980..	Der. / right 8 mm toallero / towel rack 400	-
		AMLANM...19980..	Izq. / left 10 mm toallero / towel rack 700	-
		AMRANM...19980..	Der. / right 10 mm toallero / towel rack 700	-
		AMLALM...19980..	Izq. / left 10 mm toallero / towel rack 400	-
		AMRALM...19980..	Der. / right 10 mm toallero / towel rack 400	-

Sólo se muestra el precio del acabado plata /
Only the price of the silver finish is shown

Line

Line BF

AM30G...	6 mm
AM30H...	8 mm

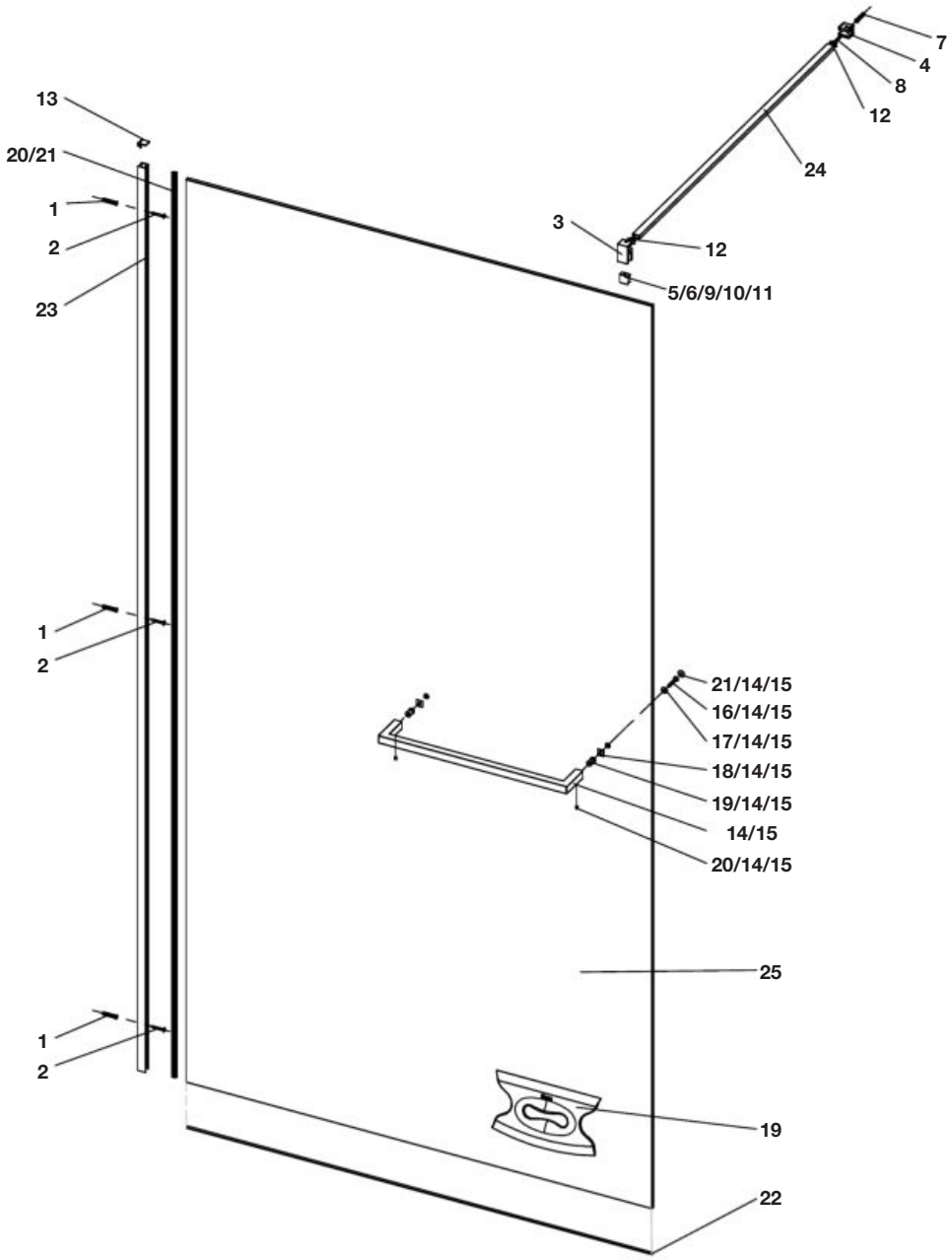

Line

Line BF

Sustituir (Y) de la referencia de producto por el código de color elegido:
2 Plata brillo
6 Negro mate
7 Oro cepillado
8 Blanco mate
A Acero inoxidable cepillado

			€
1	4 un	**AM99262900**	10,30
2	4 un		
3		**AM9940650Y**	26,10
4			
5			
6			
7			
8			
9		**AM99401300**	94,40
10			
11			
12	2 un		
13		**AM99401500**	74,10
14		**AM9944020Y**	283,00
15		**AM9944030Y**	250,00
16	2 un		
17	2 un		
18	2 un		
19	2 un		
20	2 un		

				€
21	4 un	**AM99402600**		65,40
22		**AM99225900**		23,40
23		**AM99403700**		77,70
24		**AM99403800**		76,70
25		**AM99404200**		73,30
26		**AM9940510Y**		129,00
27		**AM9940520Y**		84,30
28		**AMA9WM...14980..**	6 mm	-
		AMAAIM...14980..	8 mm	-
		AML9YM...14980..	Izq. / left 6 mm toallero / towel rack 700	-
		AMR9YM...14980..	Der. / right 6 mm toallero / towel rack 700	-
		AML9XM...14980..	Izq. / left 6 mm toallero / towel rack 400	-
		AMR9XM...14980..	Der. / right 6 mm toallero / towel rack 400	-
		AMLAMM...14980..	Izq. / left 8 mm toallero / towel rack 700	-
		AMRAMM...14980..	Der. / right 8 mm toallero / towel rack 700	-
		AMLAKM...14980..	Izq. / left 8 mm toallero / towel rack 400	-
		AMRAKM...14980..	Der. / right 8 mm toallero / towel rack 400	-

Sólo se muestra el precio del acabado plata /
Only the price of the silver finish is shown

Line

Line DHF

AM30L...	6 mm - 250
AM30U...	6 mm - 500

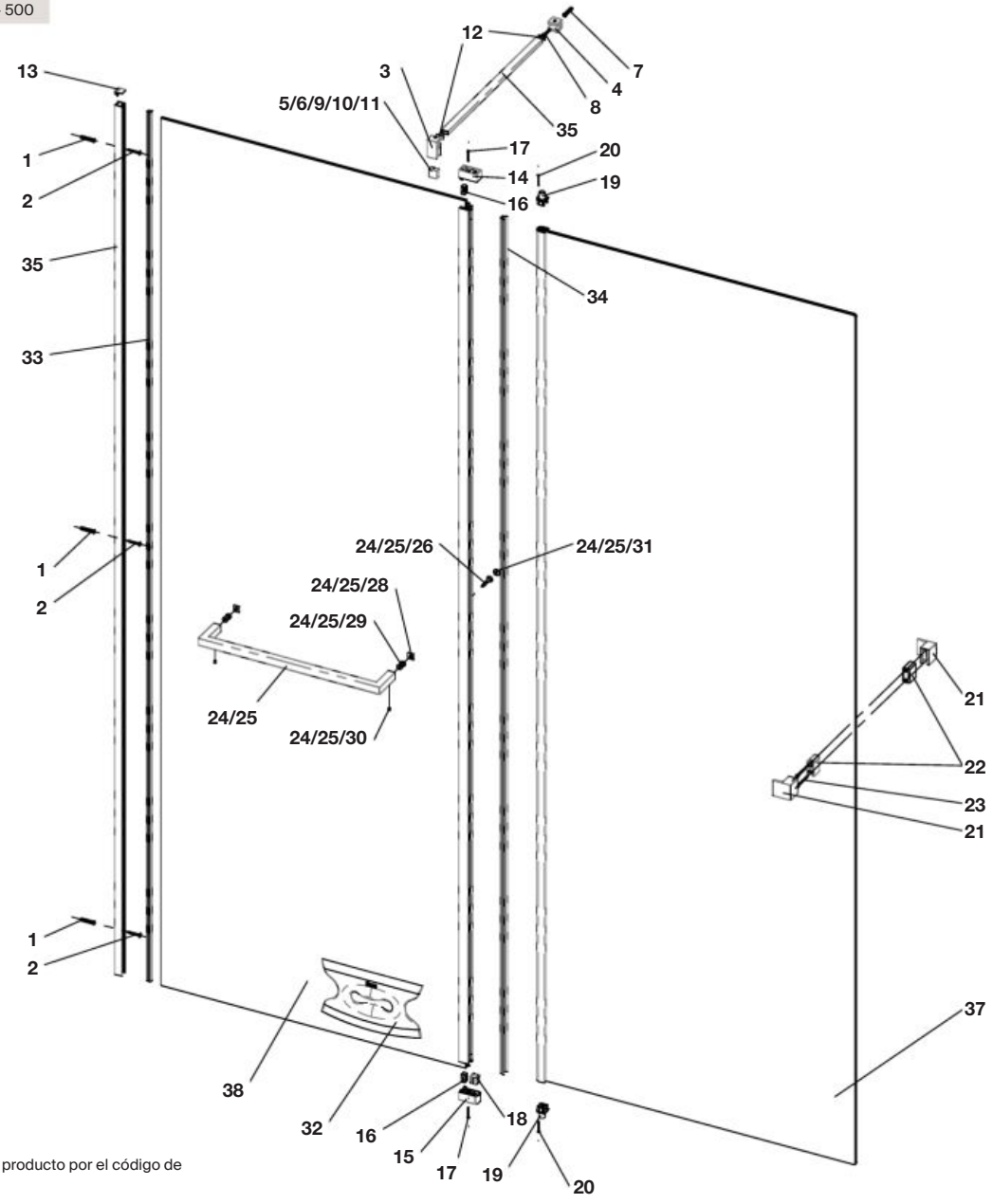

Sustituir (Y) de la referencia de producto por el código de color elegido:
2 Plata brillo
6 Negro mate
7 Oro cepillado
8 Blanco mate
A Acero inoxidable cepillado

Sólo se muestra el precio del acabado plata /
Only the price of the silver finish is shown

			€
1	4 un	**AM99262900**	10,30
2	4 un		
3		**AM9940110Y**	136,00
4			
5			
6			
7			
8			
9		**AM99401300**	94,40
10			
11			
12	2 un		

			€
13		**AM99401500**	74,10
14		**AM9940170Y**	120,00
15			
16	2 un		
17	2 un		
18		**AM99401803**	87,30
19	2 un		
20	2 un		
21	2 un	**AM9940220Y**	112,00
22	2 un		
23	2 un		
24		**AM9944020Y**	283,00

			€
25		**AM9944030Y**	250,00
26	2 un	**AM99440400**	-
27	2 un		
28	2 un		
29	2 un		
30	2 un		
31	4 un	**AM99402600**	65,40
32		**AM99225900**	23,40
33		**AM99403700**	77,70
34		**AM9E404300**	-
35		**AM9940500Y**	106,00
36		**AM9940520Y**	84,30

Line

Line DHF Hinged

AM30P...	8 mm - 250
AM30V...	8 mm - 500

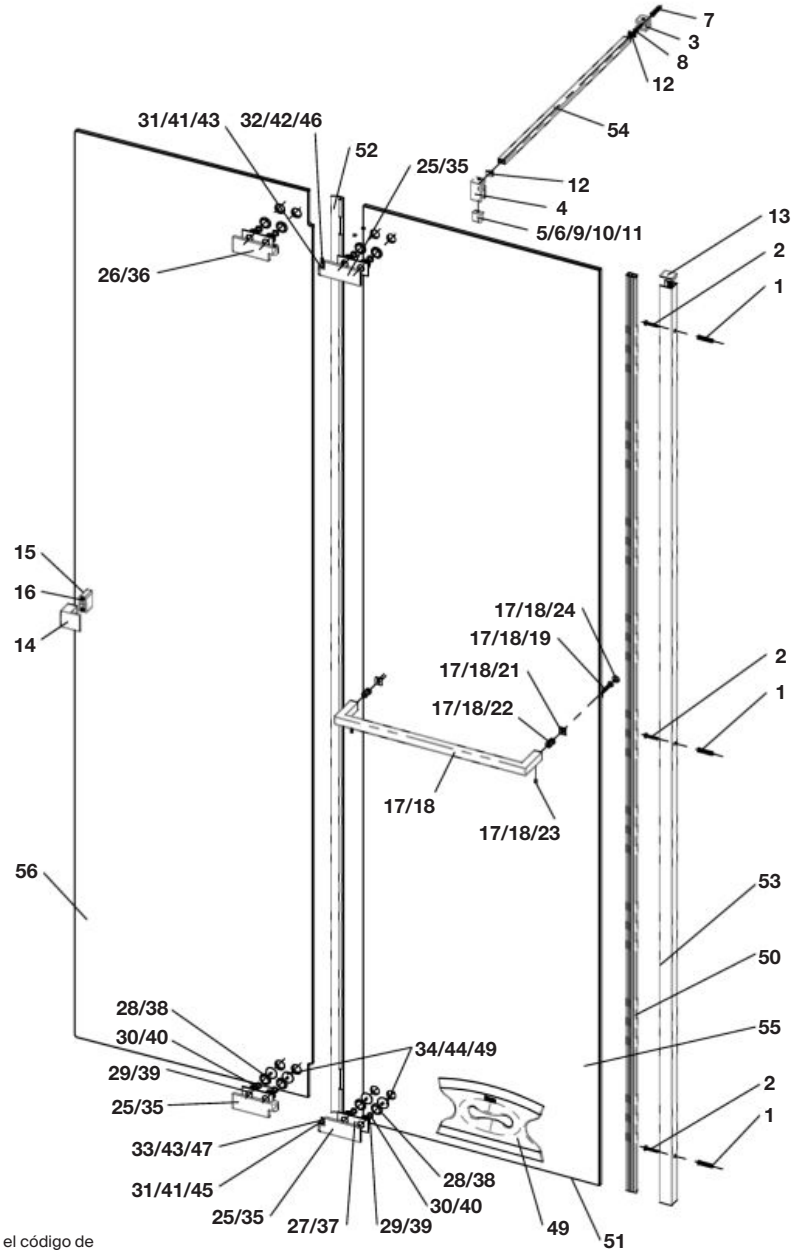

Sustituir (Y) de la referencia de producto por el código de color elegido:

2 Plata brillo
6 Negro mate
7 Oro cepillado
8 Blanco mate
A Acero inoxidable cepillado

Sólo se muestra el precio del acabado plata /
Only the price of the silver finish is shown

			€
1	4 un	**AM99262900**	10,30
2	4 un		
3		**AM9940110Y**	136,00
4			
5			
6			
7			
8			
9		**AM99401300**	94,40
10			
11			
12	2 un		

			€
13		**AM99401500**	74,10
14	2 un		
15	2 un	**AM9940220Y**	112,00
16	2 un		
17		**AM9944020Y**	283,00
18		**AM9944030Y**	250,00
19	2 un		
20	2 un		
21	2 un	**AM99440400**	-
22	2 un		
23	2 un		
24	4 un	**AM99402600**	65,40

			€
25	3 un		
26			
27	4 un		
28	8 un		
29	8 un	**AM9940270Y**	237,00
30	8 un		
31	2 un		
32			
33			
34	8 un		

Brisa

Brisa L2-E

AM3431201YM	1200
AM3431251YM	1250
AM3431301YM	1300
AM3431351YM	1350
AM3431401YM	1400
AM3431451YM	1450
AM3431501YM	1500
AM3431551YM	1550
AM3431601YM	1600
AM3431651YM	1650
AM3431701YM	1700
AM3431751YM	1750
AM3431801YM	1800
AM3431851YM	1850
AM3431901YM	1900
AM3431951YM	1950
AM3432001YM	2000

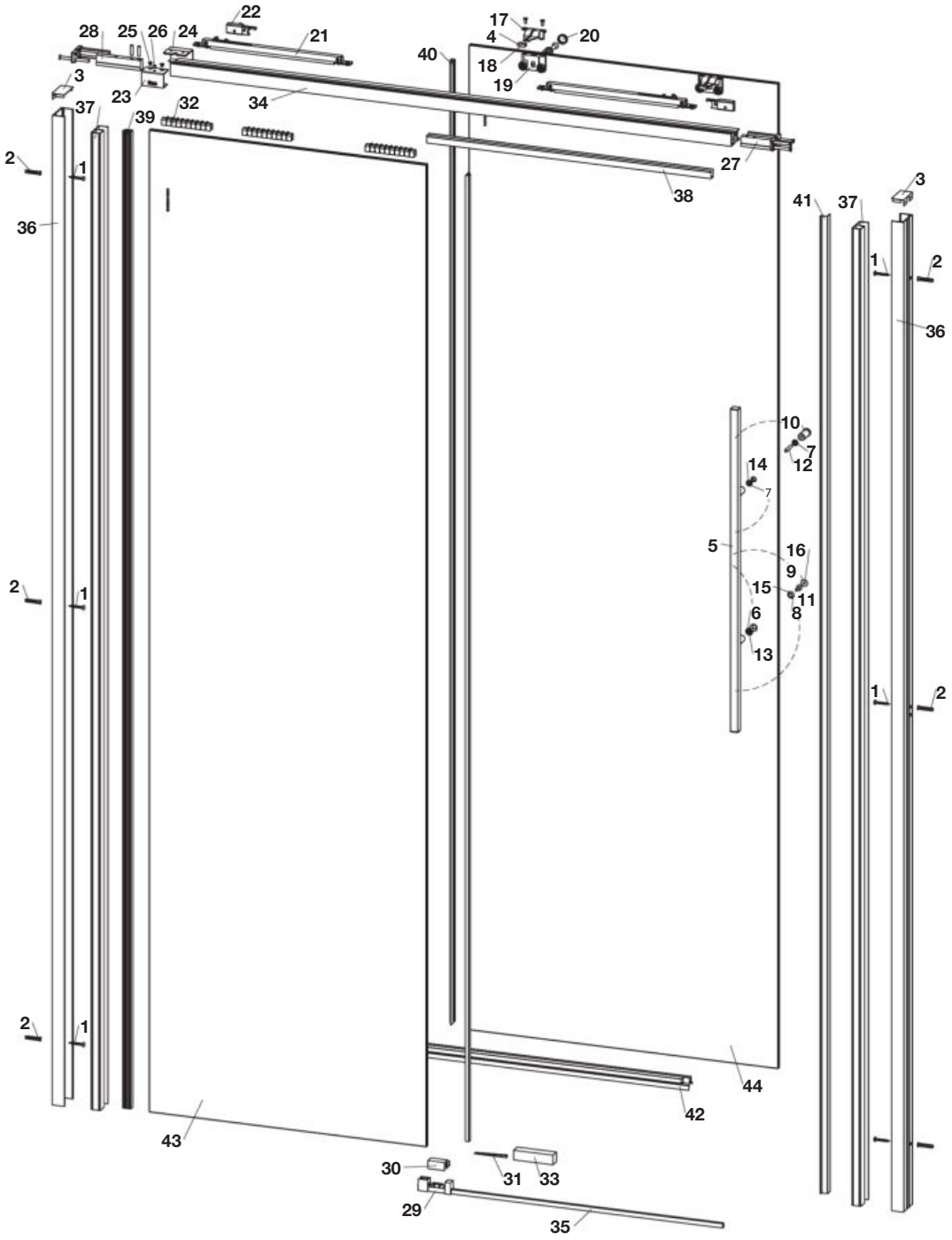

Brisa

Brisa L2-E

Sustituir (Y) de la referencia de producto por el código de color elegido:
2 Plata brillo
6 Negro mate

			€
1	3 un	**AM99327000**	6,19
2	3 un		
3	2 un	**AM99387400**	3,56
4	2 un		
5		**AM9938750Y**	47,30
6			
7	2 un		
8			
9			
10			
11			
12			
13		**AM99387600**	2,87
14	2 un		
15			
16	2 un		
17	2 un	**AM99387806**	5,07
18	2 un		
19	2 un	**AM99387906**	39,40
20	4 un	**AM99388000**	34,90
21	2 un	**AM99388100**	29,60
22	2 un	**AM9938820Y**	9,76
23		**AM9938830Y**	8,86
24			
25	2 un		
26			

					€
27		**AM99388402**			31,70
28					
29		**AM9938860Y**			5,23
30					
31	2 un	**AM99388800**			2,73
32	2 un				
33					
34		**AM9938890Y**	1200		24,60
		AM9938900Y	1250		25,40
		AM9938910Y	1300		26,60
		AM9938920Y	1350		27,60
		AM9938930Y	1400		28,60
		AM9938940Y	1450		29,60
		AM9938950Y	1500		30,40
		AM9938960Y	1550		31,40
		AM9938970Y	1600		32,60
		AM9938980Y	1650		33,70
		AM9938990Y	1700		34,70
		AM9939000Y	1750		35,60
		AM9939010Y	1800		36,40
		AM9939020Y	1850		37,60
		AM9939030Y	1900		38,60
		AM9939040Y	1950		39,60
		AM9939050Y	2000		40,60
35		**AM9939060Y**	1000		3,30
36		**AM9939080Y**	2000		24,30

				€
37		**AM9939090Y**		21,40
38		**AM9939100Y**		3,56
39		**AM9939120Y**		13,20
40		**AM99391400**		4,06
41		**AM99391500**		13,40
42		**AM99391600**		7,80
43		**AM993926M0**	1200	121,00
		AM993927M0	1250/1300 1350/1400	121,00
		AM993928M0	1450/1500 1550/1600	146,00
		AM993929M0	1650/1700 1750/1800	144,00
		AM993930M0	1850/1900 1950/2000	173,00
44		**AM993931M0**	1200/1250 1300	123,00
		AM993932M0	1350/1400 1450/1500	135,00
		AM993933M0	1550/1600 1650/1700	149,00
		AM993934M0	1750/1800 1850/1900	160,00
		AM993935M0	1950/2000	170,00

Sólo se muestra el precio del acabado plata /
Only the price of the silver finish is shown

Brisa

Brisa LF-C

AM3730701YM	700
AM3730801YM	800
AM3730901YM	900
AM3431201YM	1200
AM3431251YM	1250
AM3431301YM	1300
AM3431351YM	1350
AM3431401YM	1400
AM3431451YM	1450
AM3431501YM	1500
AM3431551YM	1550
AM3431601YM	1600
AM3431651YM	1650
AM3431701YM	1700
AM3431751YM	1750
AM3431801YM	1800
AM3431851YM	1850
AM3431901YM	1900
AM3431951YM	1950
AM3432001YM	2000

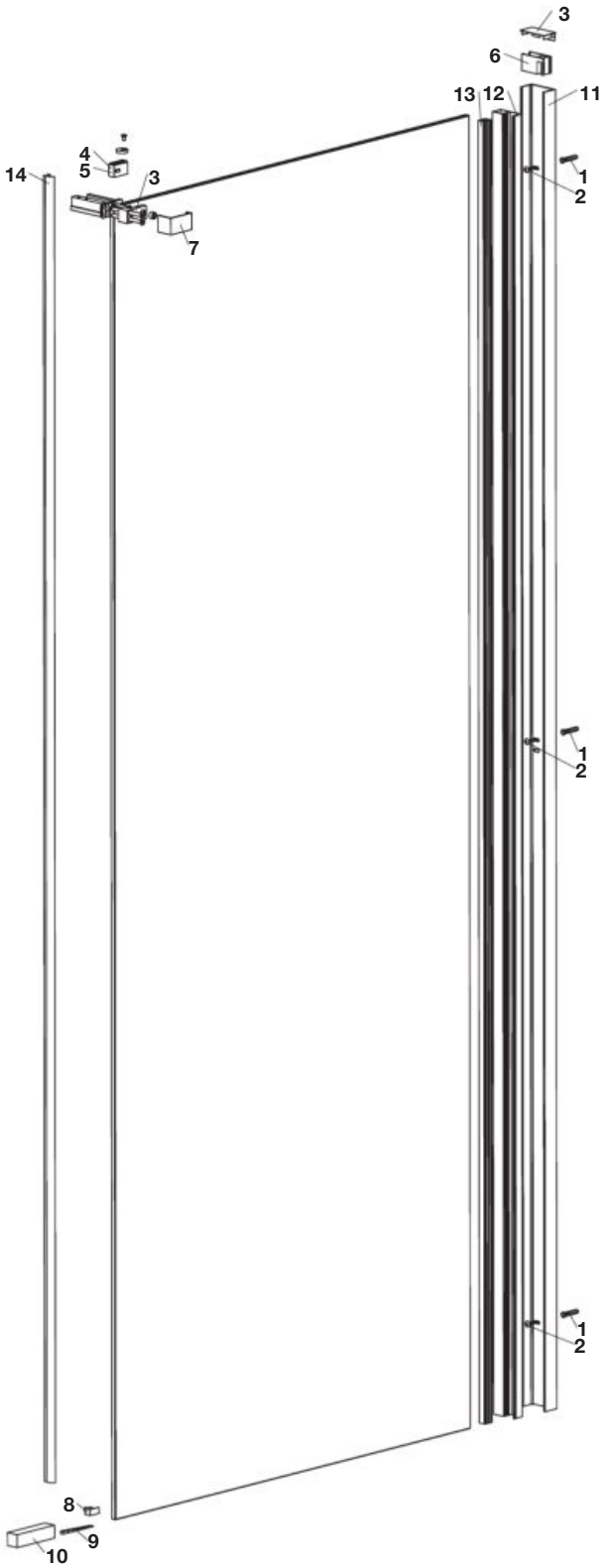

Sustituir (Y) de la referencia de producto por el código de color elegido:
2 Plata brillo
6 Negro mate

			€
1	3 un	**AM99327000**	6,19
2	3 un		
3		**AM99388503**	11,60
4			
5			
6		**AM9938870Y**	7,61
7	2 un		
8	2 un		
9	2 un	**AM99388800**	2,73
10			
11		**AM9939080Y**	24,30
12		**AM9939090Y**	21,40
13		**AM9939120Y**	13,20
14		**AM99383600**	3,40

Sólo se muestra el precio del acabado plata /
Only the price of the silver finish is shown

Brisa

Brisa PEF

AM3720701YM	700
AM3720801YM	800
AM3720901YM	900
AM3721001YM	1000
AM3721101YM	1100
AM3721201YM	1200
AM3721301YM	1300
AM3721401YM	1400

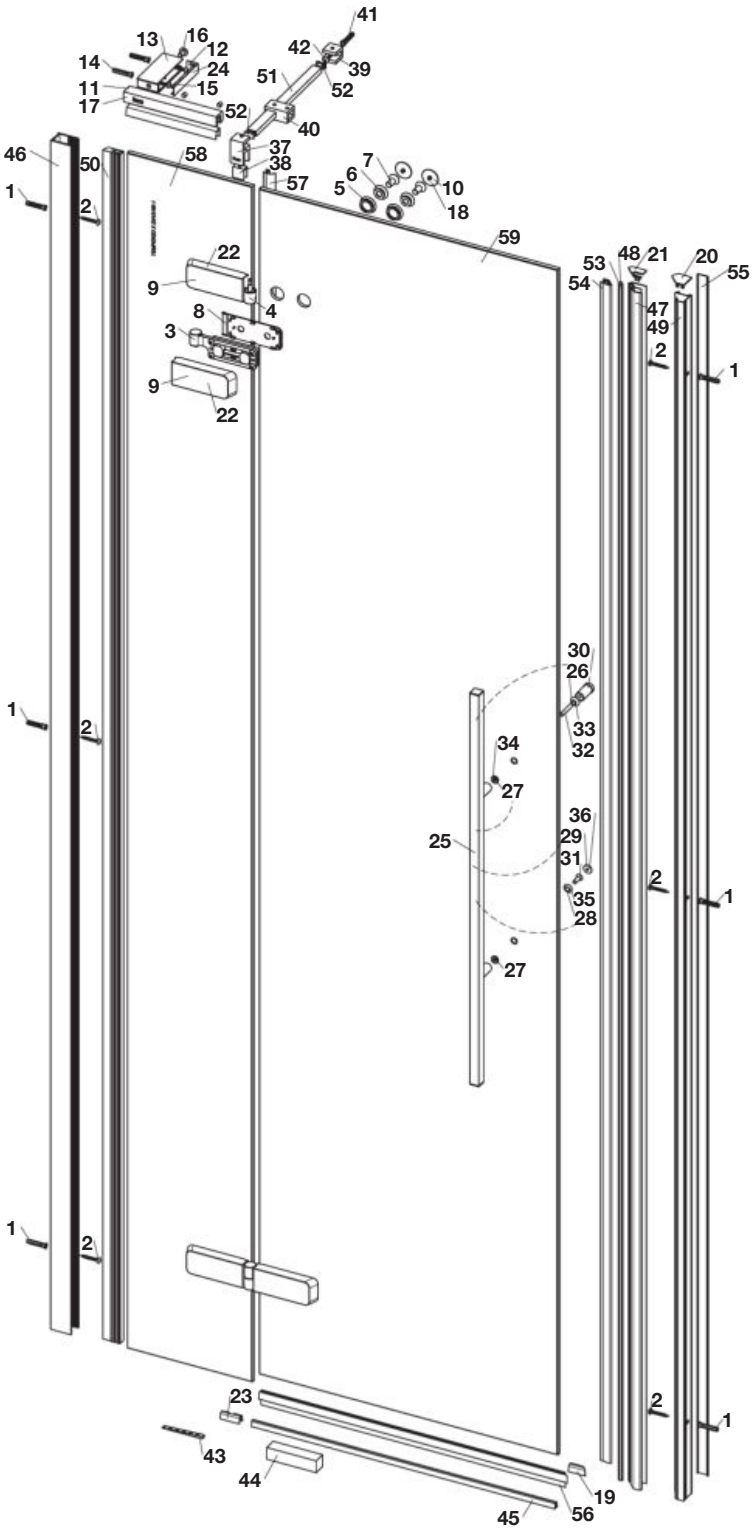

Brisa

Brisa PEF

Sustituir (Y) de la referencia de producto por el código de color elegido:
2 Plata brillo
6 Negro mate

					€
1	3 un	**AM99327000**			6,19
2	3 un				
3		**AM9938110Y**			69,60
4					
5	4 un				
6	4 un				
7	4 un				
8	2 un				
9	2 un				
10	4 un				
11		**AM9938140Y**	800-1400		30,90
12					
13					
14	2 un				
15	2 un				
16					
17		**AM9938730Y**			27,60
12					
13					
14	2 un				
15	2 un				
16					
18	8 un	**AM9938150Y**			8,20

Sólo se muestra el precio del acabado plata /
Only the price of the silver finish is shown

				€
19	2 un	**AM9938170Y**		7,80
20	2 un			
21	2 un			
22	2 un	**AM9938180Y**		19,30
23	2 un	**AM9938210Y**		8,40
24		**AM9938220Y**		3,50
25		**AM9938750Y**		47,30
26				
27	2 un			
28				
29				
30				
31				
32				
33		**AM99387600**		2,87
34	2 un			
35				
36	2 un			
37		**AM9938770Y**		13,80
38				
39				
40				
41				
42				

				€
43	2 un	**AM99388800**		2,73
44				
45		**AM9939060Y**		3,30
46		**AM9938260Y**		19,00
47		**AM9938270Y**		18,60
48				
49		**AM9938280Y**		10,70
50		**AM9939130Y**		17,00
51		**AM9939360Y**		13,60
52	2 un			
53		**AM99383100**		4,51
54		**AM99383200**		5,40
55	2 un	**AM99383300**		2,87
56		**AM99383500**		2,50
57		**AM99383600**		3,40
58		**AM993917M0**	700	82,10
		AM993918M0	800	100,00
		AM993919M0	900/1000	101,00
		AM993920M0	1100	114,00
		AM993921M0	1200	115,00
		AM993922M0	1300	127,00
		AM993923M0	1400	150,00
59		**AM993924M0**	700/800/900	121,00
		AM993925M0	1000/1100 1200/1300 1400	131,00

Brisa

Brisa PLF

AM3440701YM	700
AM3440801YM	800
AM3440901YM	900
AM3441001YM	1000
AM3441101YM	1100
AM3441201YM	1200
AM3441301YM	1300
AM3441401YM	1400

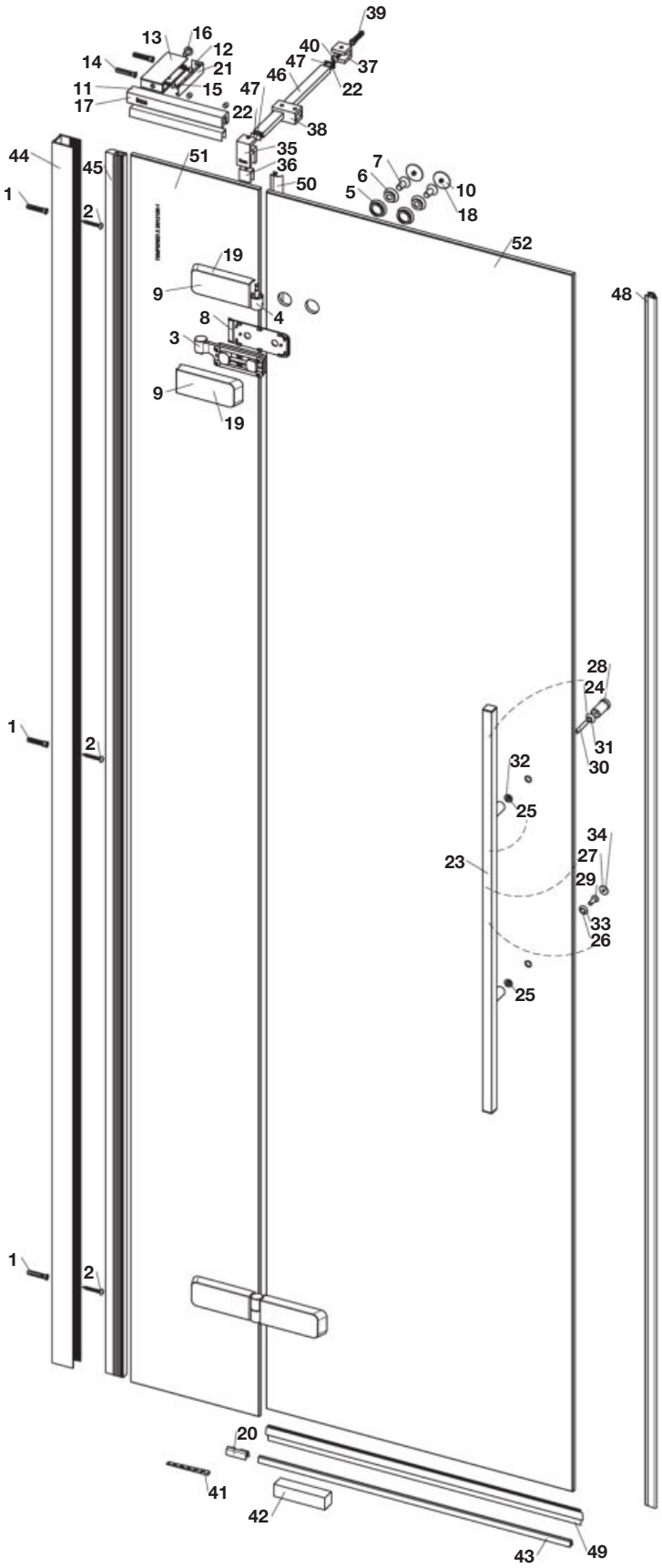

Brisa

Brisa PLF

Sustituir (Y) de la referencia de producto por el código de color elegido:
2 Plata brillo
6 Negro mate

				€
1	3 un	**AM99327000**		6,19
2	3 un			
3		**AM9938110Y**		69,60
4				
5	4 un			
6	4 un			
7	4 un			
8	2 un			
9	2 un			
10	4 un			
11		**AM9938140Y**	800-1400	30,90
12				
13				
14	2 un			
15	2 un			
16				
17		**AM9938730Y**		27,60
12				
13				
14	2 un			
15	2 un			
16				
18	8 un	**AM9938150Y**		8,20

			€
19	2 un	**AM9938180Y**	19,30
20	2 un	**AM9938210Y**	8,40
21		**AM9938220Y**	3,50
22	2 un	**AM99387400**	3,56
23		**AM9938750Y**	47,30
24			
25	2 un		
26			
27			
28			
29			
30			
31		**AM99387600**	2,87
32	2 un		
33			
34	2 un		
35		**AM9938770Y**	13,80
36			
37			
38			
39			
40			

				€
41	2 un	**AM99388800**		2,73
42				
43		**AM9939060Y**		3,30
44		**AM9938260Y**		19,00
45		**AM9939130Y**		17,00
46		**AM9939360Y**		13,60
47	2 un			
48		**AM99383200**		5,40
49		**AM99383500**		2,50
50		**AM99383600**		3,40
51		**AM993917M0**	700	82,10
		AM993918M0	800	100,00
		AM993919M0	900/1000	101,00
		AM993920M0	1100	114,00
		AM993921M0	1200	115,00
		AM993922M0	1300	127,00
		AM993923M0	1400	150,00
52		**AM993924M0**	700/800/900	121,00
		AM993925M0	1000/1100 1200/1300 1400	131,00

Sólo se muestra el precio del acabado plata /
Only the price of the silver finish is shown

Brisa

Brisa LF

AM3740701YM	700
AM3740801YM	800
AM3740901YM	900

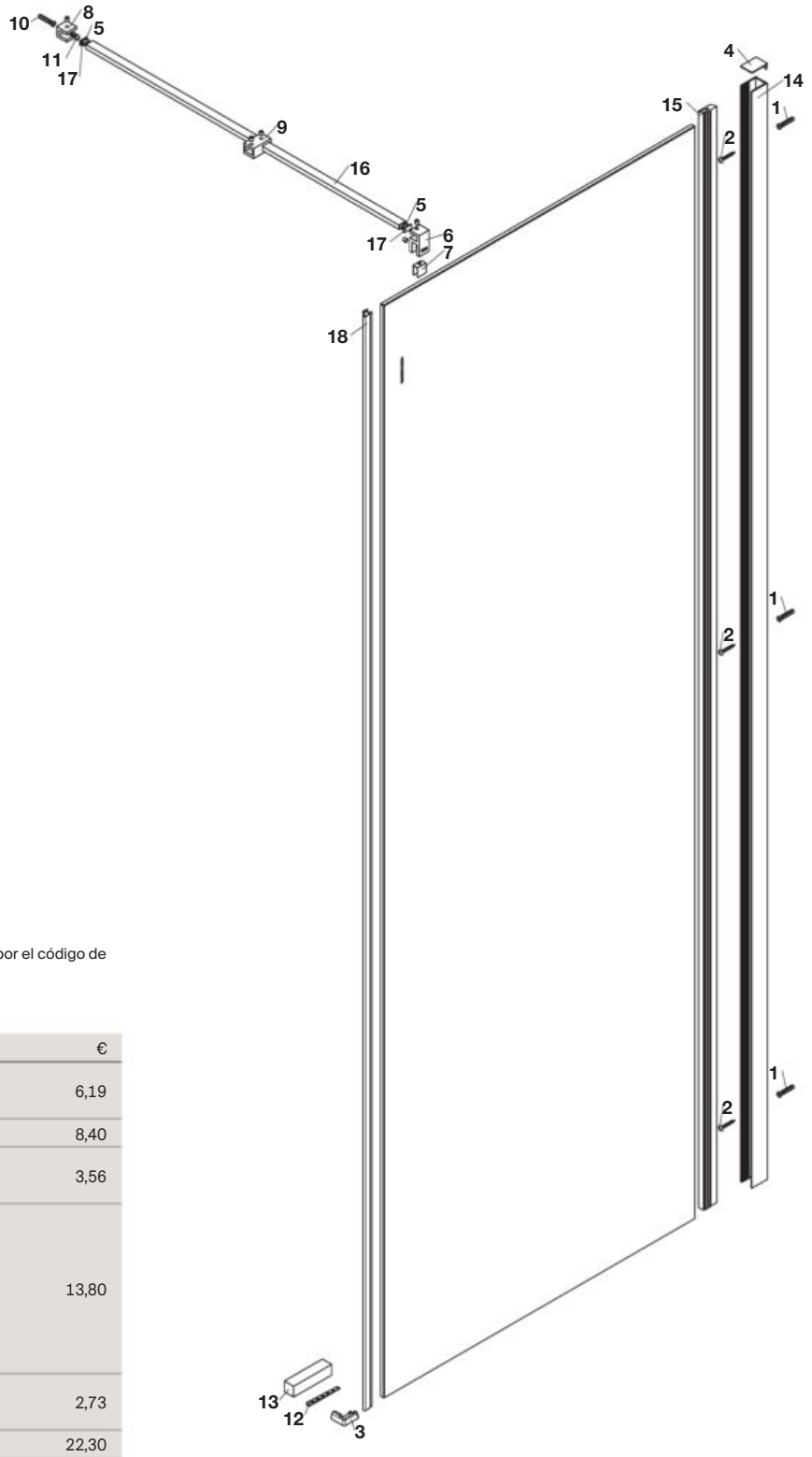

Sustituir (Y) de la referencia de producto por el código de color elegido:
2 Plata brillo
6 Negro mate

			€
1	3 un	**AM99327000**	6,19
2	3 un		
3	2 un	**AM9938210Y**	8,40
4		**AM99387400**	3,56
5	2 un		
6		**AM9938770Y**	13,80
7			
8			
9			
10			
11			
12	2 un	**AM99388800**	2,73
13			
14		**AM9939070Y**	22,30
15		**AM9939110Y**	18,00
16		**AM9939360Y**	13,60
17	2 un		
18		**AM99383200**	5,40

Sólo se muestra el precio del acabado plata /
Only the price of the silver finish is shown

Brisa

Brisa perfil suplementario 15mm / Brisa extension profile 15mm

AM3492000Y

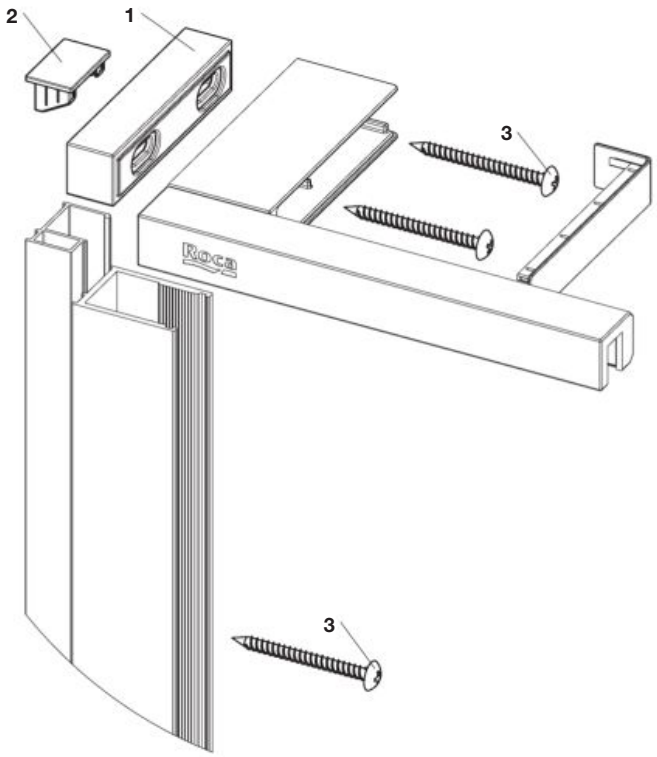

Sustituir (Y) de la referencia de producto por el código de color elegido:
2 Plata brillo
6 Negro mate

			€
1			
2	2 un	**AM9938160Y**	6,56
3	5 un		

Sólo se muestra el precio del acabado plata /
Only the price of the silver finish is shown

Mistral

Mistral DF

AM25910012M	1000
AM25912012M	1200
AM25914012M	1400

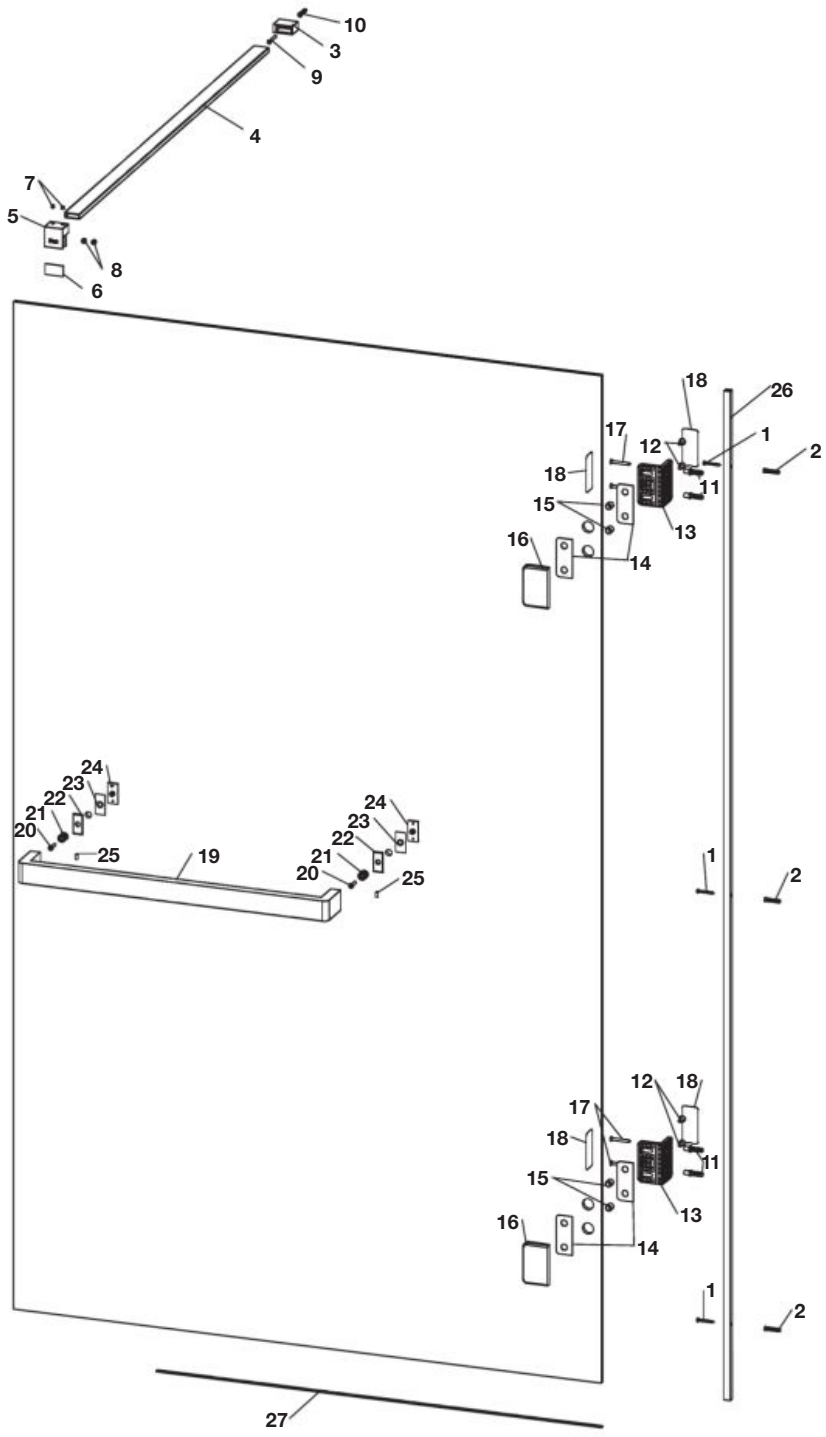

			€
1	3 un	**AM99346202**	6,64
2	3 un		
3		**AM99346302**	62,00
4			
5			
6			
7	2 un		
8	2 un		
9			
10			

			€
11	3 un	**AM99346402**	44,30
12	2 un		
13			
14	2 un		
15	2 un		
16			
17	3 un		
18	2 un		

			€
19		**AM99346502**	61,00
20	2 un		
21	2 un		
22	2 un		
23	2 un		
24	2 un		
25	2 un		
26		**AM99346702**	46,40
27		**AM99346900**	7,69

Mistral

Mistral DF

AM25710012M	1000
AM25712012M	1200
AM25714012M	1400

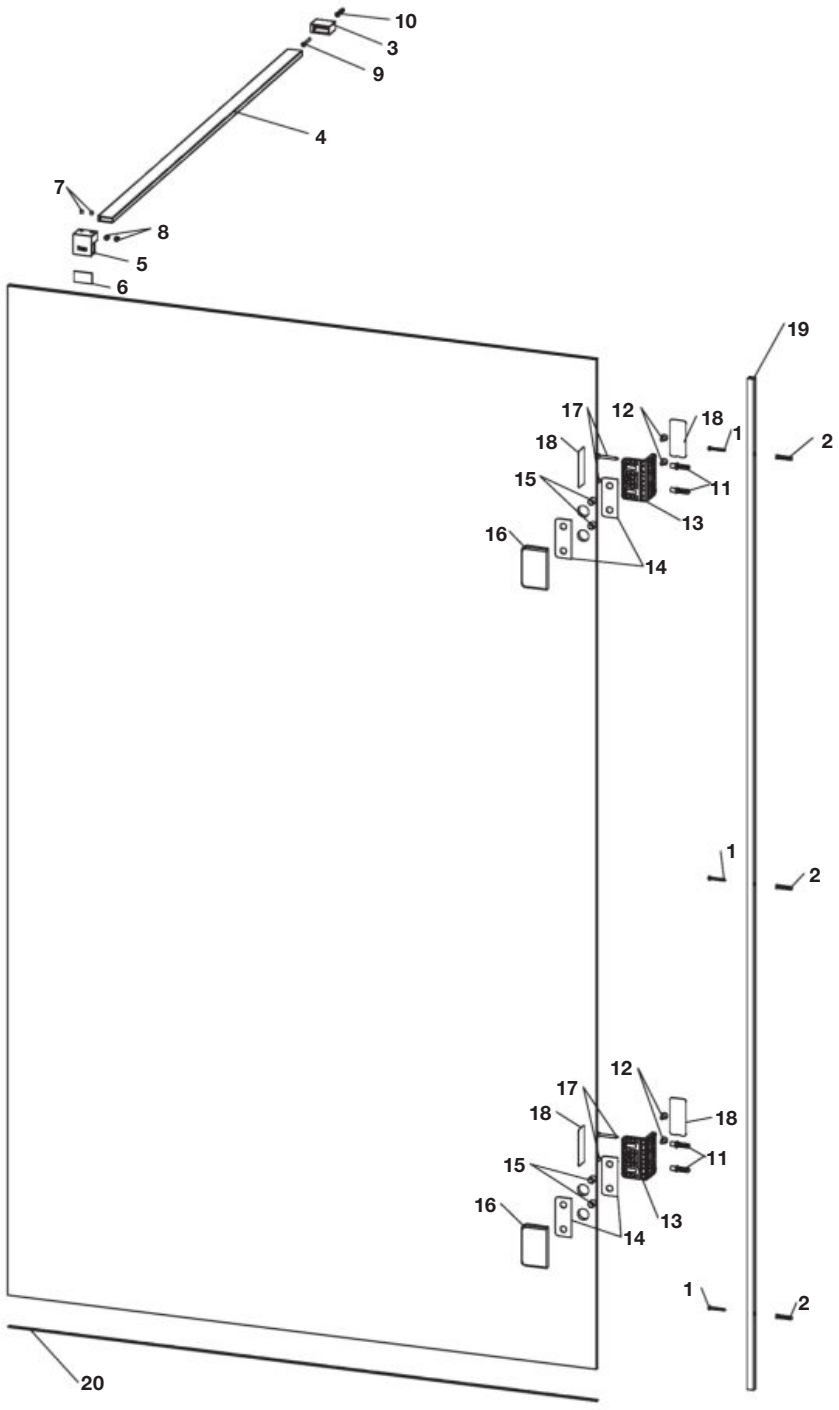

			€
1	3 un	**AM99346202**	6,64
2	3 un		
3		**AM99346302**	62,00
4			
5			
6			
7	2 un		
8	2 un		
9			
10			

			€
11	3 un	**AM99346402**	44,30
12	2 un		
13			
14	2 un		
15	2 un		
16			
17	3 un		
18	2 un		
19		**AM99346702**	46,40
20		**AM99346900**	7,69

Naray

Naray L2-E

AM14510012M	1000
AM14511012M	1100
AM14512012M	1200
AM14513012M	1300
AM14514012M	1400
AM14515012M	1500
AM14516012M	1600
AM14517012M	1700
AM14518012M	1800

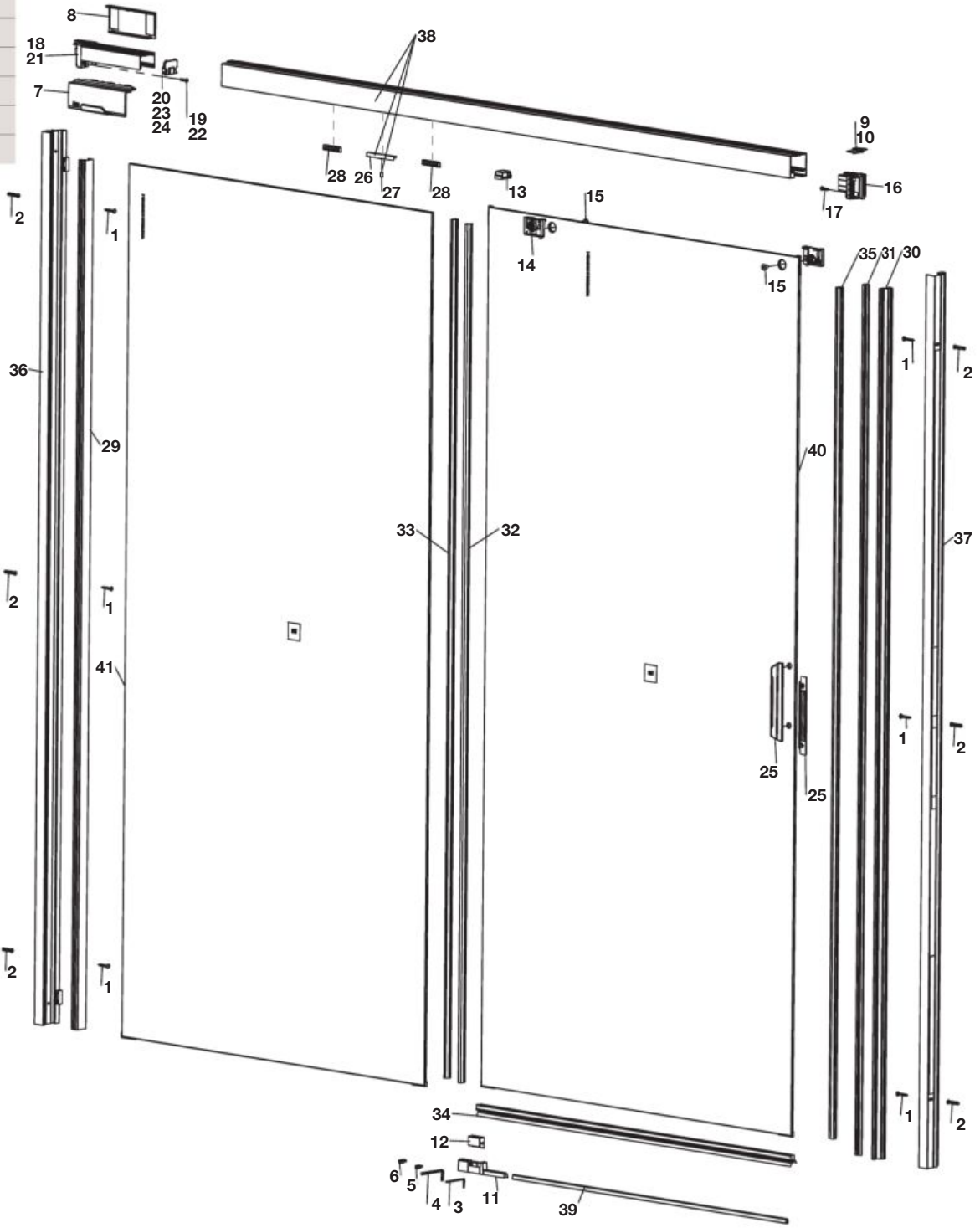

Naray

Naray L2-E

					€
1	3 un	**AM99327000**			6,19
2	3 un				
3		**AM99327100**			7,17
4					
5					
6					
7		**AM99327402**			11,00
8					
9		**AM99327500**			29,60
10					
11		**AM99327602**			8,07
12					
13	2 un	**AM99327900**			6,24
14		**AM99328003**			14,40
15					
16	2 un	**AM99328103**			12,70
17					
18		**AM99328202**	1000-1600		12,70
19					
20					
21		**AM99374202**	1700-1800		11,50
22					
23					
24		**AM99328403**			5,69
25	2 un	**AM99328802**			8,43
26		**AM99328903**			5,83
27					

					€
28	2 un	**AM99329000**			5,50
29		**AM99329103**			19,00
30		**AM99329203**			27,30
31					
32		**AM99329300**			6,70
33					
34		**AM99329600**	1000		10,60
		AM99329700	1100		10,80
		AM99329800	1200		11,00
		AM99329900	1300		11,10
		AM99330000	1400		11,30
		AM99330100	1500		11,40
		AM99330200	1600		13,20
		AM99374300	1700		11,10
		AM99374400	1800		11,20
35		**AM99330600**			13,50
36		**AM99330802**			108,00
37		**AM99330902**			97,40
38		**AM99331002**	1000		28,10
		AM99331102	1100		29,90
		AM99331202	1200		31,70
		AM99331302	1300		31,70
		AM99331402	1400		35,40
		AM99331502	1500		37,00
		AM99331602	1600		39,00
		AM99374502	1700		44,00
		AM99374602	1800		45,70

				€
39	**AM99332502**	1000		10,10
	AM99332602	1100		10,20
	AM99332702	1200		10,40
	AM99332802	1300		10,40
	AM99332902	1400		12,60
	AM99333002	1500		10,50
	AM99333102	1600		10,70
	AM99374702	1700		8,74
	AM99374802	1800		10,00
40	**AM99334102M**	1000		157,00
	AM99334202M	1100		164,00
	AM99334302M	1200		173,00
	AM99334402M	1300		170,00
	AM99334502M	1400		174,00
	AM99334602M	1500		194,00
	AM99334702M	1600		186,00
	AM99374902M	1700		136,00
	AM99375002M	1800		141,00
41	**AM99335600M**	1000		69,90
	AM99335700M	1100		72,30
	AM99335800M	1200		75,70
	AM99335900M	1300		84,10
	AM99336000M	1400		88,10
	AM99336100M	1500		91,40
	AM99336200M	1600		129,00
	AM99375100M	1700		108,00
	AM99375200M	1800		117,00

Naray

Naray 2L2

AM14607012M	700
AM14607512M	750
AM14608012M	800
AM14608512M	850
AM14609012M	900
AM14610012M	1000
AM14611012M	1100
AM14612012M	1200

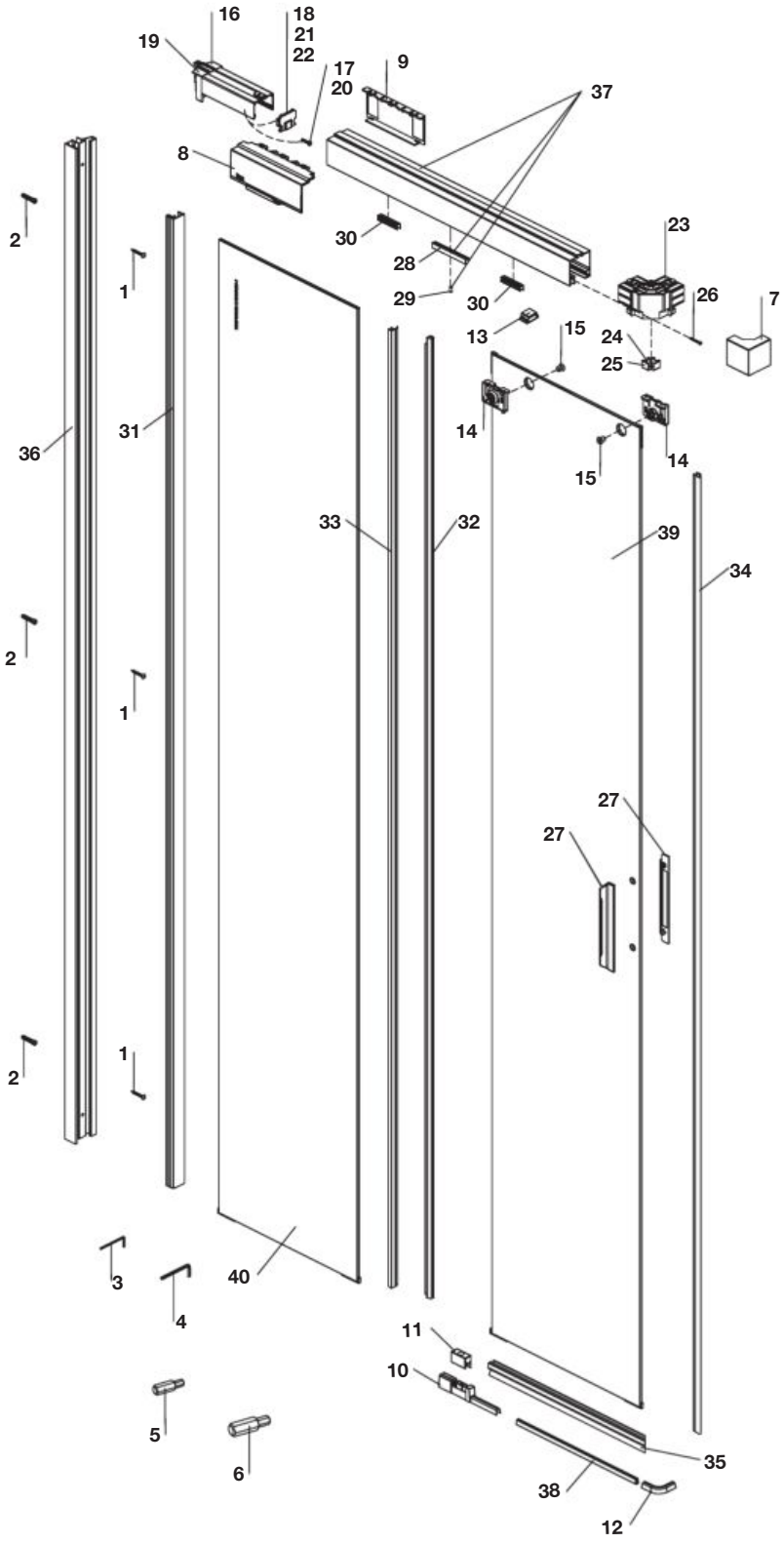

Naray

Naray 2L2

					€
1	3 un	**AM99327000**			6,19
2	3 un				
3		**AM99327100**			7,17
4					
5					
6					
7		**AM99340402**			6,69
8		**AM99327402**			11,00
9					
10		**AM99327602**			8,07
11					
12		**AM99327702**			6,24
13	2 un	**AM99327900**			6,24
14		**AM99328003**			14,40
15					
16		**AM99328202**	900-1200		12,70
17					
18					
19		**AM99328302**	700-850		12,10
20					
21					
22		**AM99328403**			5,69
23		**AM99328503**			9,93
24	2 un				

				€
25		**AM99328603**		5,53
26	2 un	**AM99328700**		5,44
27	2 un	**AM99328802**		8,43
28		**AM99328903**		5,83
29				
30	2 un	**AM99329000**		5,50
31		**AM99329103**		19,00
32		**AM99329300**		6,70
33				
34		**AM99329400**		15,40
35		**AM99330300**	700-850	10,40
		AM99330400	900-1200	11,00
36		**AM99330802**		108,00
37		**AM99331702**	700	22,30
		AM99331802	750	23,60
		AM99331902	800	24,40
		AM99332002	850	25,10
		AM99332102	900	25,70
		AM99332202	1000	28,00
		AM99332302	1100	29,70
		AM99332402	1200	31,60

			€
38	**AM99333202**	700	9,90
	AM99333302	750	10,10
	AM99333402	800	9,96
	AM99333502	850	10,00
	AM99333602	900	10,00
	AM99333702	1000	10,10
	AM99333802	1100	10,20
	AM99333902	1200	10,30
39	**AM99334802M**	700	141,00
	AM99334902M	750	149,00
	AM99335002M	800	146,00
	AM99335102M	850	149,00
	AM99335202M	900	153,00
	AM99335302M	1000	160,00
	AM99335402M	1100	161,00
	AM99335502M	1200	166,00
40	**AM99336300M**	700	60,70
	AM99336400M	750	62,40
	AM99336500M	800	64,60
	AM99336600M	850	66,30
	AM99336700M	900	69,90
	AM99336800M	1000	73,90
	AM99336900M	1100	77,10
	AM99337000M	1200	81,00

Naray

Naray LF

AM14707012M	700
AM14708012M	800
AM14709012M	900

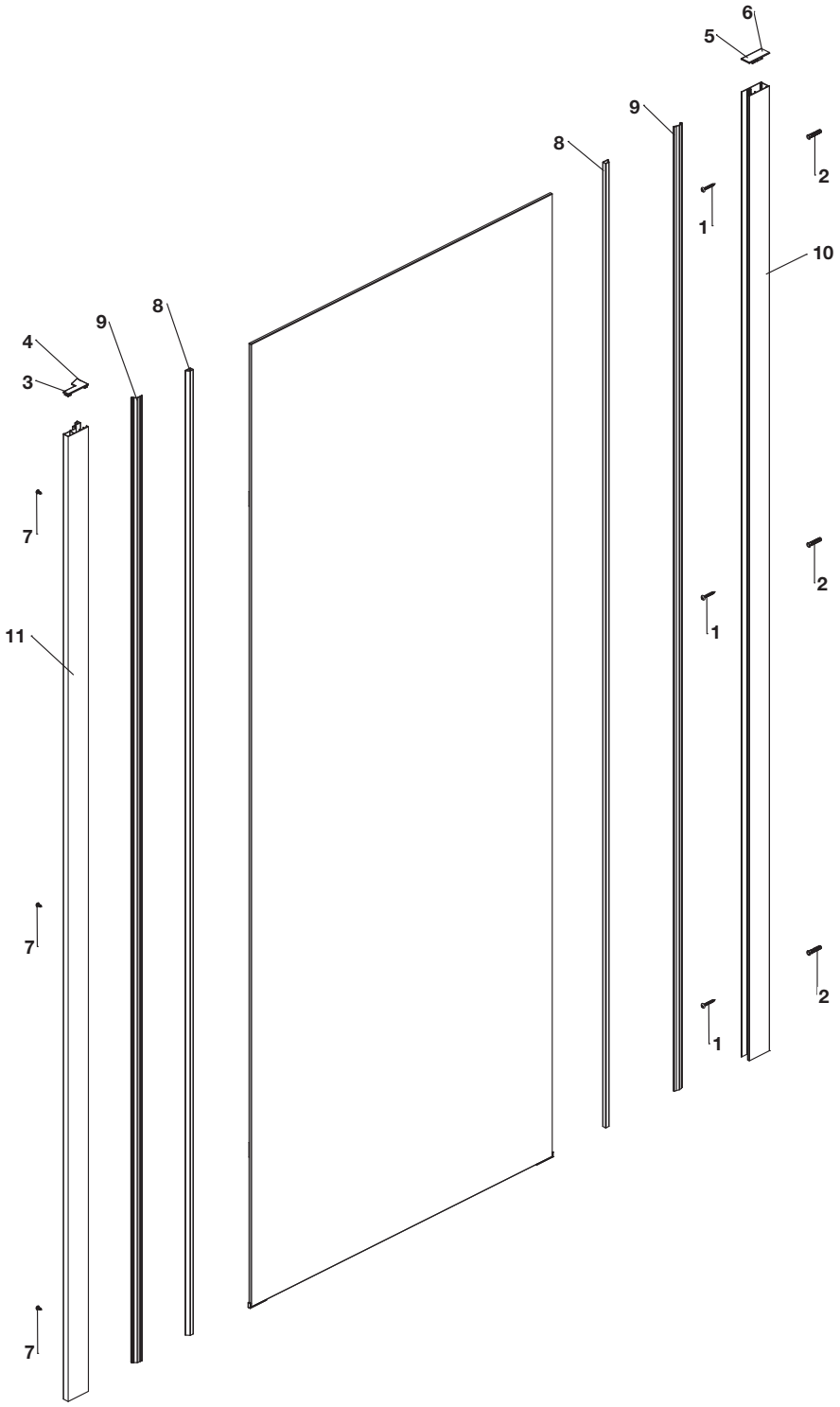

			€
1	3 un	**AM99327000**	6,19
2	3 un		
3		**AM99327300**	6,67
4			
5			
6			

			€
7	3 un	**AM99327800**	5,57
8	2 un	**AM99329503**	12,70
9	2 un	**AM99330500**	12,20
10		**AM99330702**	103,00
11		**AM99334002**	17,00

Naray

Naray Upgrade L2-E

AM2823E87D001.NMN	1000
AM28244C7D001.NMN	1100
AM2824B07D001.NMN	1200
AM2825147D001.NMN	1300
AM2825787D001.NMN	1400
AM2825DC7D001.NMN	1500
AM2826407D001.NMN	1600
AM2826A47D001.NMN	1700
AM2827087D001.NMN	1800

Sustituir . de la referencia de producto por el código de color elegido:
2 Plata brillo
6 Negro mate

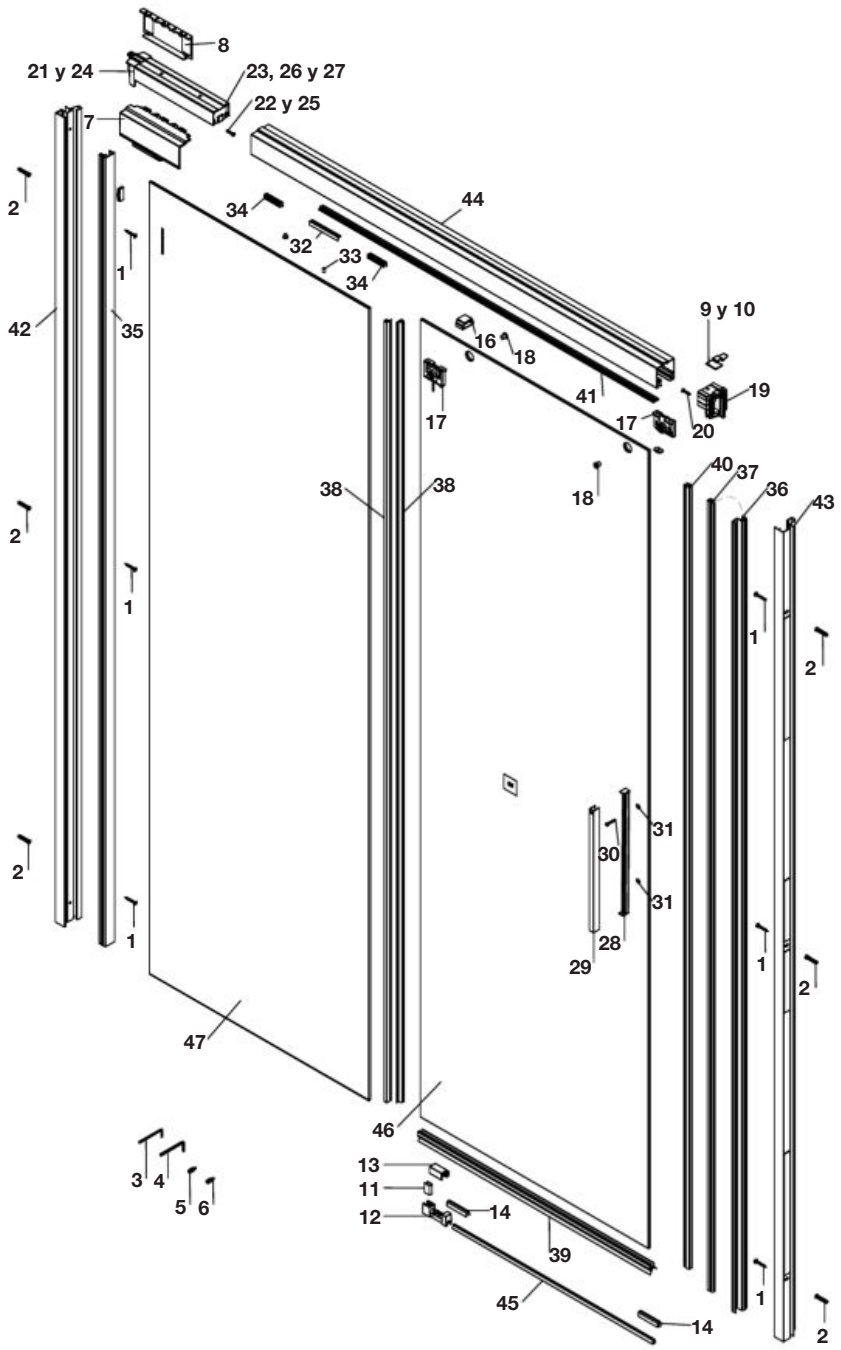

Naray

Naray Upgrade L2-E

Sólo se muestra el precio del acabado plata /
Only the price of the silver finish is shown

Sustituir (Y) de la referencia de producto por el código de color elegido:
2 Plata brillo
6 Negro mate

			€
1	3 un	**AM99327000**	6,19
2	3 un		
3		**AM99327100**	7,17
4			
5			
6			
7		**AM9940680Y**	8,56
8			
9		**AM99327500**	29,60
10			
11		**AM9939380Y**	5,57
12			
13			
14	2 un	**AM9939390Y**	7,73
15			
16	2 un	**AM99327900**	6,24
17		**AM9932800Y**	7,61
18			
19	2 un	**AM9932810Y**	8,47
20	2 un		
21		**AM9939400Y**	8,51
22			
23			
24		**AM9939420Y**	9,09
25			
26			
27		**AM99328403**	5,69

			€
28	2 un	**AM9939430Y**	17,10
29	2 un		
30	2 un		
31	2 un		
32		**AM99328903**	5,83
33			
34	2 un	**AM99329000**	5,50
35		**AM9939440Y**	10,40
36	2 un	**AM9939450Y**	17,40
37			
38		**AM99394600**	7,37
39		**AM99374400**	11,20
40		**AM99395000**	5,60
41		**AM99395100**	3,26
42		**AM9939530Y**	24,70
43		**AM9939540Y**	21,40
44		**AM9939550Y**	24,40
		AM9939560Y	25,40
		AM9939570Y	28,10
		AM9939580Y	30,40
		AM9939590Y	32,70
		AM9939600Y	34,90
		AM9939610Y	37,00
		AM9939620Y	39,40
		AM9939630Y	39,90
		AM9943960Y	57,90
		AM9943970Y	57,90

		€
45	**AM9939060Y**	3,30
46	**AM993973M0**	80,60
	AM993974M0	81,10
	AM993975M0	89,60
	AM993976M0	90,10
	AM993977M0	125,00
	AM993978M0	104,00
	AM993979M0	105,00
	AM993980M0	111,00
	AM993981M0	93,70
	AM994398M0	154,00
	AM994399M0	159,00
47	**AM993990M0**	53,90
	AM993991M0	72,00
	AM993992M0	77,10
	AM993993M0	80,70
	AM993994M0	85,70
	AM993995M0	71,70
	AM993996M0	94,10
	AM993997M0	97,70
	AM993998M0	103,00
	AM994400M0	149,00
	AM994401M0	154,00

Naray

Naray Upgrade 2L2

AM2832BC7D001.NMN	700
AM2832EE7D001.NMN	750
AM2833207D001.NMN	800
AM2833527D001.NMN	850
AM2833847D001.NMN	900
AM2833E87D001.NMN	1000
AM28344C7D001.NMN	1100
AM2834B07D001.NMN	1200

Sustituir . de la referencia de producto por el código de color elegido:
2 Plata brillo
6 Negro mate

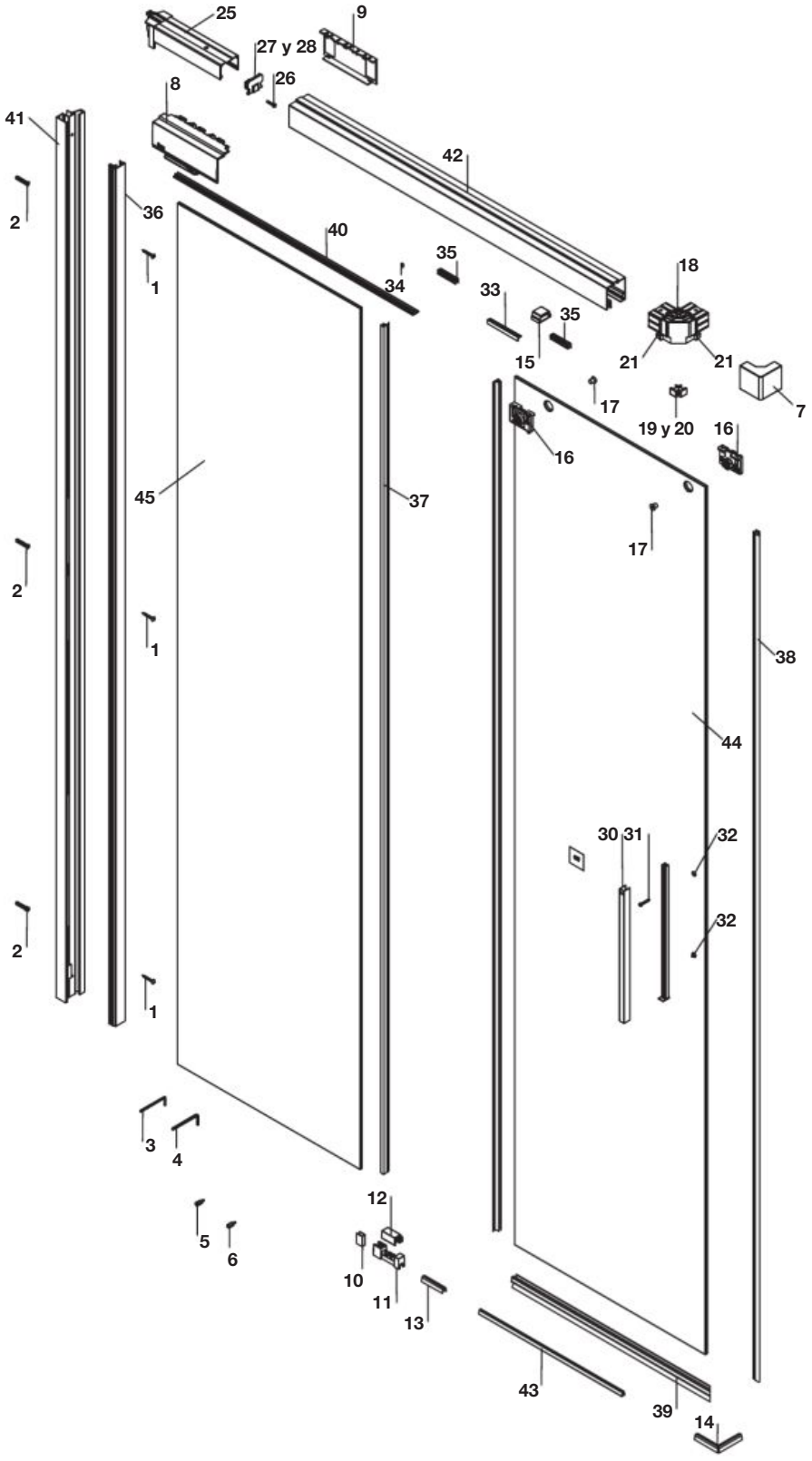

Naray

Naray Upgrade 2L2

Sólo se muestra el precio del acabado plata /
Only the price of the silver finish is shown

Sustituir (Y) de la referencia de producto por el código de color elegido:
2 Plata brillo
6 Negro mate

			€/un
1	3 un	**AM99327000**	6,19
2	3 un		
3		**AM99327100**	7,17
4			
5			
6			
7		**AM9934040Y**	6,69
8		**AM9940680Y**	8,56
9			
10		**AM9939380Y**	5,57
11			
12			
13	2 un	**AM9939390Y**	7,73
14			
15	2 un	**AM99327900**	6,24
16		**AM9932800Y**	7,61
17			
18		**AM99328503**	9,93
19	2 un		
20		**AM99328603**	5,53
21	2 un	**AM99328700**	5,44
22		**AM9939400Y**	8,51
23			
24			

			€/un
25		**AM9939410Y**	7,93
26			
27			
28		**AM99328403**	5,69
29	2 un	**AM9939430Y**	17,10
30	2 un		
31	2 un		
32	2 un		
33		**AM99328903**	5,83
34			
35	2 un	**AM99329000**	5,50
36		**AM9939440Y**	10,40
37		**AM99394600**	7,37
38		**AM99394700**	5,04
39		**AM99330400**	11,00
40		**AM99395100**	3,26
41		**AM9939530Y**	24,70
42		**AM9939640Y** 700	17,10
		AM9939650Y 750	18,40
		AM9939660Y 800	19,60
		AM9939670Y 850	20,70
		AM9939680Y 900	21,70
		AM9939690Y 1000	22,90
		AM9939700Y 1100	25,00
		AM9939710Y 1200	27,70

			€/un
43	**AM9939060Y**		3,30
44	**AM993982M0**	700	51,30
	AM993983M0	750	53,30
	AM993984M0	800	55,40
	AM993985M0	850	57,30
	AM993986M0	900	59,00
	AM993987M0	1000	80,90
	AM993988M0	1100	81,60
	AM993989M0	1200	54,40
45	**AM993999M0**	700	43,40
	AM994000M0	750	46,90
	AM994001M0	800	47,00
	AM994002M0	850	49,00
	AM994003M0	900	50,70
	AM994004M0	1000	54,00
	AM994005M0	1100	70,70
	AM994006M0	1200	77,30

Naray

Naray Upgrade LF

AM2842BC7D001.NMN	700
AM2842EE7D001.NMN	750
AM2843207D001.NMN	800
AM2843847D001.NMN	900

Sustituir . de la referencia de producto por el código de color elegido:
2 Plata brillo
6 Negro mate

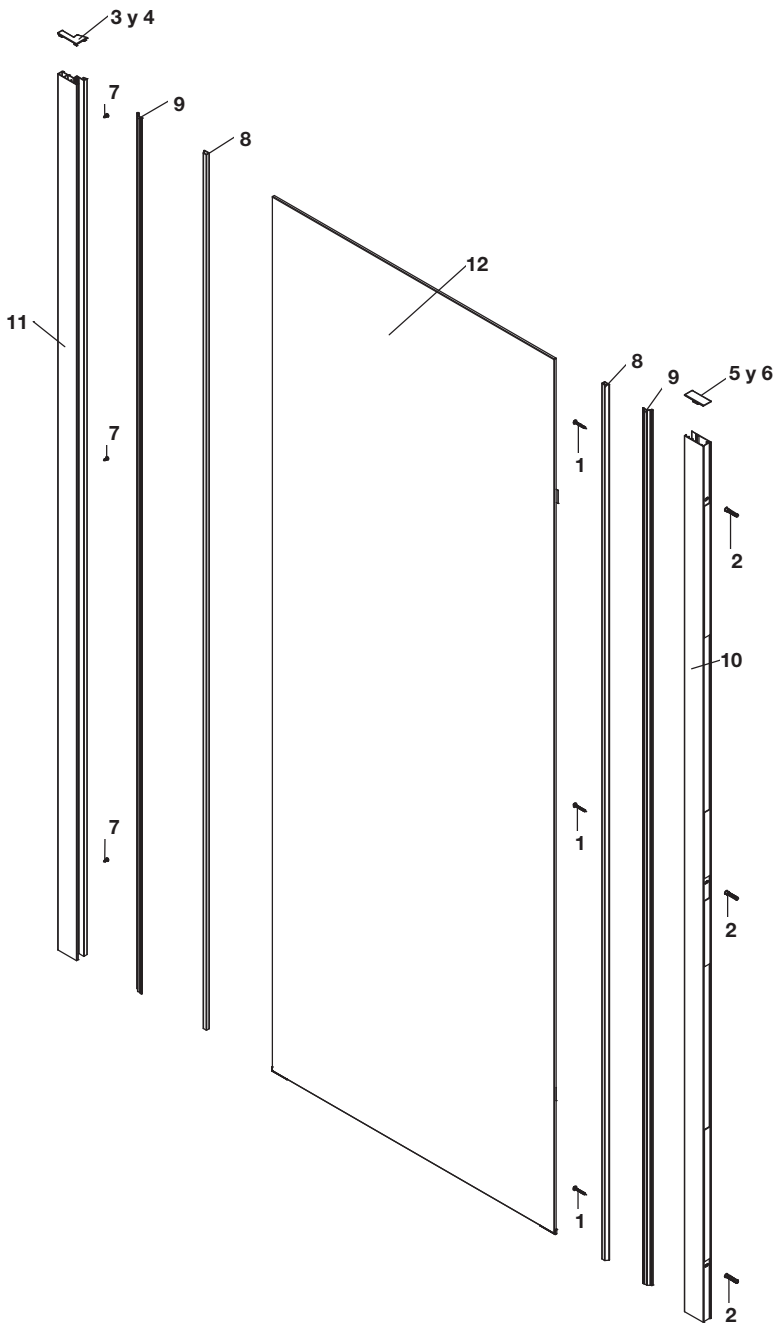

Sustituir (Y) de la referencia de producto por el código de color elegido:
2 Plata brillo
6 Negro mate

			€
1	3 un	**AM99327000**	6,19
2	3 un		
3		**AM99327300**	6,67
4			
5			
6			
7	3 un	**AM99327800**	5,57
8	2 un	**AM9939480Y**	4,21
9	2 un	**AM99394900**	6,50

			€
10	**AM9939520Y**		24,30
11	**AM9939720Y**		24,90
12	**AM994007M0**	700	82,90
	AM994008M0	750	70,40
	AM994009M0	800	93,00
	AM994010M0	900	102,00

Sólo se muestra el precio del acabado plata /
Only the price of the silver finish is shown

Ura-N

Ura 2L2

AM20H2BC7D001.NMN	700
AM20H2EE7D001.NMN	750
AM20H3207D001.NMN	800
AM20H3527D001.NMN	850
AM20H3847D001.NMN	900
AM20H3E87D001.NMN	1000
AM20H44C7D001.NMN	1100
AM20H4B07D001.NMN	1200

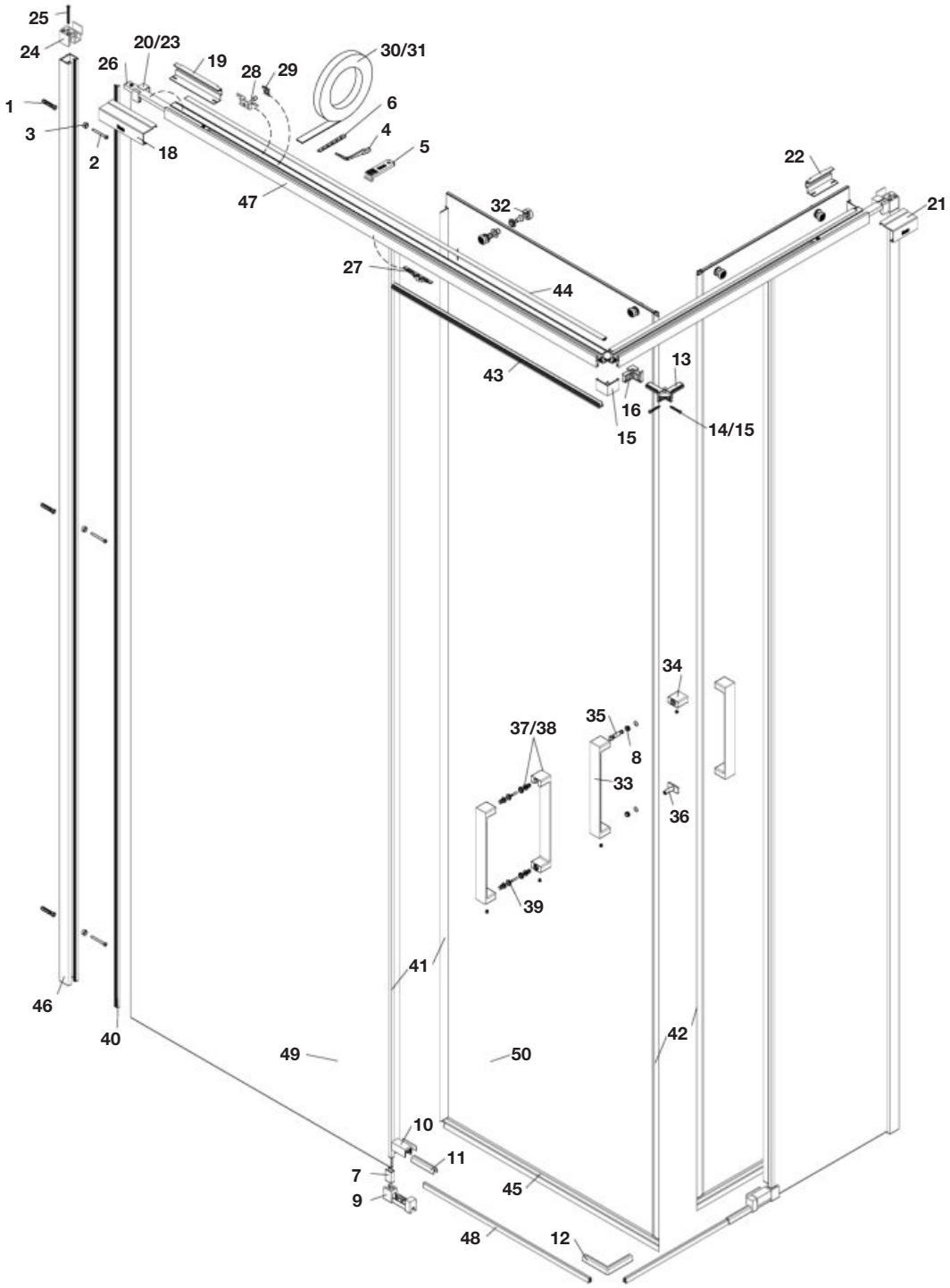

Ura-N

Ura 2L2

Sustituir (Y) de la referencia de producto por el código de color elegido:
2 Plata brillo
6 Negro mate

			€
1	3 un		
2	3 un	**AM99412000**	8,04
3	3 un		
4		**AM99412100**	4,83
5	2 un	**AM99412200**	4,47
6		**AM99412300**	4,44
7		**AM99430300**	3,66
8	2 un		
9		**AM9938860Y**	5,23
10			
11	2 un	**AM9939390Y**	7,73
12			
13		**AM99412906**	6,84
14	2 un		
15			
16		**AM9941300Y**	6,16
17	2 un		
18			
19		**AM9941330Y**	6,31
20			
21			
22		**AM9941340Y**	11,80
23			

			€
24		**AM9941370Y**	6,67
25			
26		**AM99413903**	10,20
27		**AM99414103**	4,40
28	2 un	**AM99414206**	16,10
29	2 un		
30		**AM99341500**	33,70
31		**AM99414300**	69,00
32	2 un	**AM9941440Y**	20,70
33		**AM9943040Y**	37,40
34			
35		**AM9943050Y**	8,37
36			
37	2 un	**AM9943060Y**	53,10
38	2 un		
39	2 un	**AM9943070Y**	14,40
40		**AM99414806**	11,60
41	2 un	**AM99439500**	25,30
42		**AM99415100**	12,40
43		**AM99415200**	9,47
44	2 un	**AM99404900**	76,70
45		**AM99330400**	11,00
46		**AM9941570Y**	27,10

Sólo se muestra el precio del acabado plata /
Only the price of the silver finish is shown

				€
47	**AM9941620Y**	700	34,10
	AM9941630Y	750	34,10
	AM9941640Y	800	34,10
	AM9941650Y	850	34,10
	AM9941660Y	900	34,10
	AM9941670Y	1000	34,10
	AM9941680Y	1100	34,10
	AM9941690Y	1200	35,10
48	**AM9939060Y**		3,30
49	**AM994335M0**	700	57,60
	AM994336M0	750	59,90
	AM994337M0	800	62,00
	AM994338M0	850	64,10
	AM994339M0	900	68,70
	AM994340M0	1000	75,30
	AM994341M0	1100	92,30
	AM994342M0	1200	105,00
50	**AM994343M0**	700	79,40
	AM994344M0	750	81,70
	AM994345M0	800	84,00
	AM994346M0	850	91,40
	AM994347M0	900	91,40
	AM994348M0	1000	93,40
	AM994349M0	1100/1200	100,00

Ura-N

Ura L2-E

AM20J3E87D001.NMN	1000
AM20J44C7D001.NMN	1100
AM20J4B07D001.NMN	1200
AM20J5147D001.NMN	1300
AM20J5787D001.NMN	1400
AM20J5DC7D001.NMN	1500
AM20J6407D001.NMN	1600
AM20J6A47D001.NMN	1700
AM20J7087D001.NMN	1800

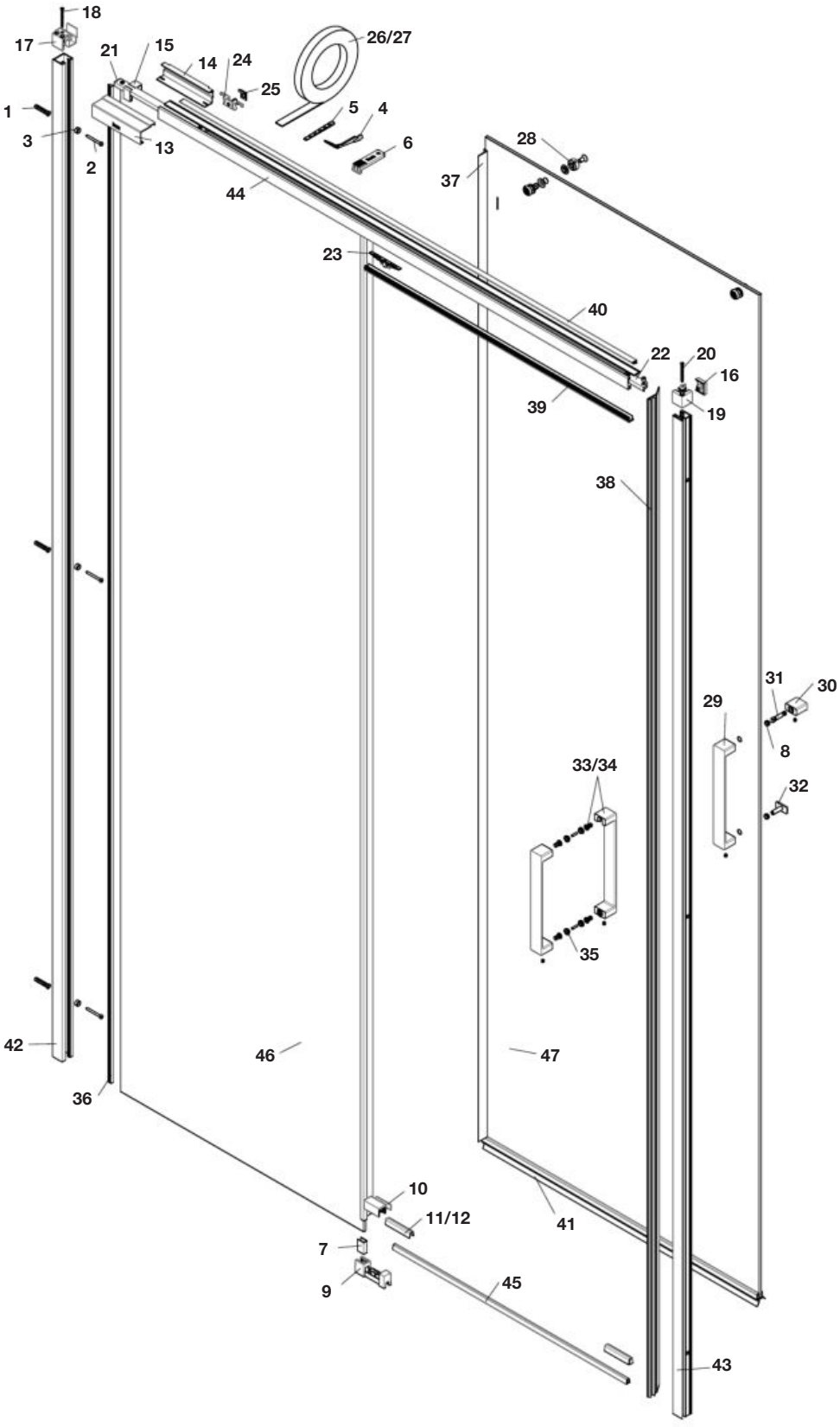

Ura-N

Ura L2-E

Sustituir (Y) de la referencia de producto por el código de color elegido:
2 Plata brillo
6 Negro mate

			€
1	3 un		
2	3 un	**AM99412100**	4,83
3	3 un		
4		**AM99412100**	4,83
5	2 un	**AM99412200**	4,47
6		**AM99412300**	4,44
7			
8	2 un	**AM99430300**	3,66
9			
10		**AM9938860Y**	5,23
11	2 un		
12		**AM9939390Y**	7,73
13			
14		**AM9941330Y**	6,31
15			
16		**AM9941360Y**	4,80
17			
18		**AM9941370Y**	6,67
19			
20		**AM9941380Y**	7,14
21		**AM99413903**	10,20
22		**AM99414003**	16,70
23		**AM99414103**	4,40
24	2 un		
25	2 un	**AM99414206**	16,10
26		**AM99341500**	33,70

				€
27		**AM99414300**		69,00
28	2 un	**AM9941440Y**		20,70
29				
30		**AM9943040Y**		37,40
31				
32	2 un	**AM9943050Y**		8,37
33	2 un			
34	2 un	**AM9943060Y**		53,10
35		**AM9943070Y**		14,40
36	2 un	**AM99414806**		11,60
37		**AM99439500**		25,30
38		**AM99415000**		10,90
39		**AM99415200**		9,47
40		**AM99415300**		11,10
41		**AM99374400**		11,20
42		**AM9941570Y**		27,10
43		**AM9943110Y**		57,40
44		**AM9941710Y**	1100	41,40
		AM9941720Y	1200	41,40
		AM9941730Y	1300	41,40
		AM9941740Y	1400	41,40
		AM9941750Y	1500	42,60
		AM9941760Y	1600	41,40
		AM9941770Y	1700	42,10
		AM9941780Y	1800	42,10
45		**AM9939060Y**		3,30

Sólo se muestra el precio del acabado plata /
Only the price of the silver finish is shown

			€
46	**AM994317M0**	1000	84,00
	AM994318M0	1100	88,30
	AM994319M0	1200	93,30
	AM994320M0	1300	99,70
	AM994321M0	1400	106,00
	AM994322M0	1500	111,00
	AM994323M0	1600	117,00
	AM994324M0	1700	122,00
	AM994325M0	1800	177,00
47	**AM994326M0**	1000	95,60
	AM994327M0	1100	101,00
	AM994328M0	1200	106,00
	AM994329M0	1300	112,00
	AM994330M0	1400	118,00
	AM994331M0	1500	121,00
	AM994332M0	1600	128,00
	AM994333M0	1700	133,00
	AM994334M0	1800	140,00

Ura-N

Ura LF-C

AM20K2BC7D001.NMN	700
AM20K2EE7D001.NMN	750
AM20K3207D001.NMN	800
AM20K3847D001.NMN	900

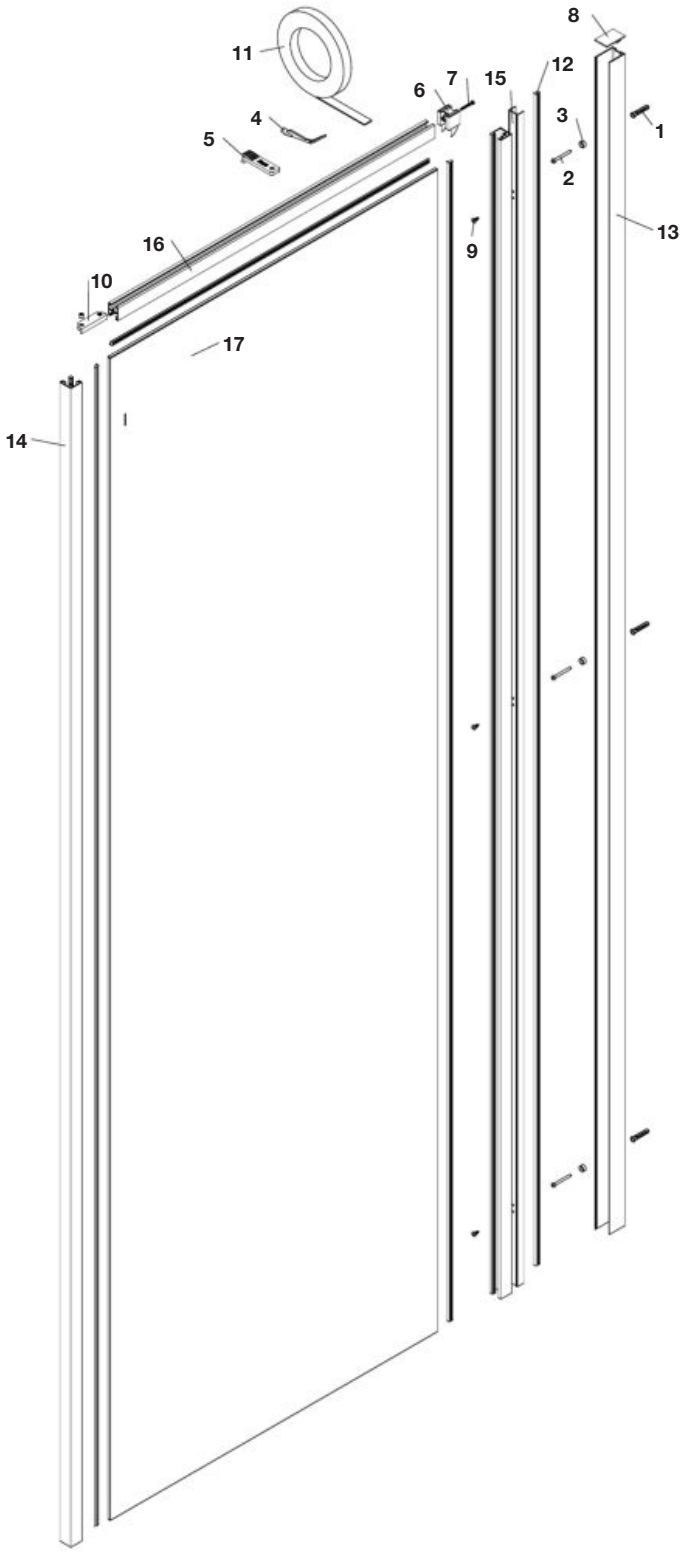

Sustituir (Y) de la referencia de producto por el código de color elegido:
2 Plata brillo
6 Negro mate

				€
1	3 un			
2	3 un	**AM99412000**		8,04
3	3 un			
4		**AM99412100**		4,83
5		**AM99412300**		4,44
6		**AM9941260Y**		5,43
7				
8		**AM99413500**		4,90
9	3 un	**AM99348000**		7,94
10		**AM99414003**		16,70
11		**AM99414300**		69,00
12		**AM99414806**		11,60
13		**AM9941590Y**		30,00
14		**AM9943120Y**		28,00
15		**AM9941610Y**		16,60
16		**AM9941850Y**	700	14,60
		AM9941860Y	750	14,60
		AM9941870Y	800	14,60
		AM9941880Y	900	14,60
17		**AM994366M0**	700	153,00
		AM994367M0	750	157,00
		AM994368M0	800	163,00
		AM994369M0	900	171,00

Sólo se muestra el precio del acabado plata /
Only the price of the silver finish is shown

Ura-N

Ura L4-E

AM20L6407D001.NMN	1600
AM20L6A47D001.NMN	1700
AM20L7087D001.NMN	1800
AM20L76C7D001.NMN	1900
AM20L7D07D001.NMN	2000

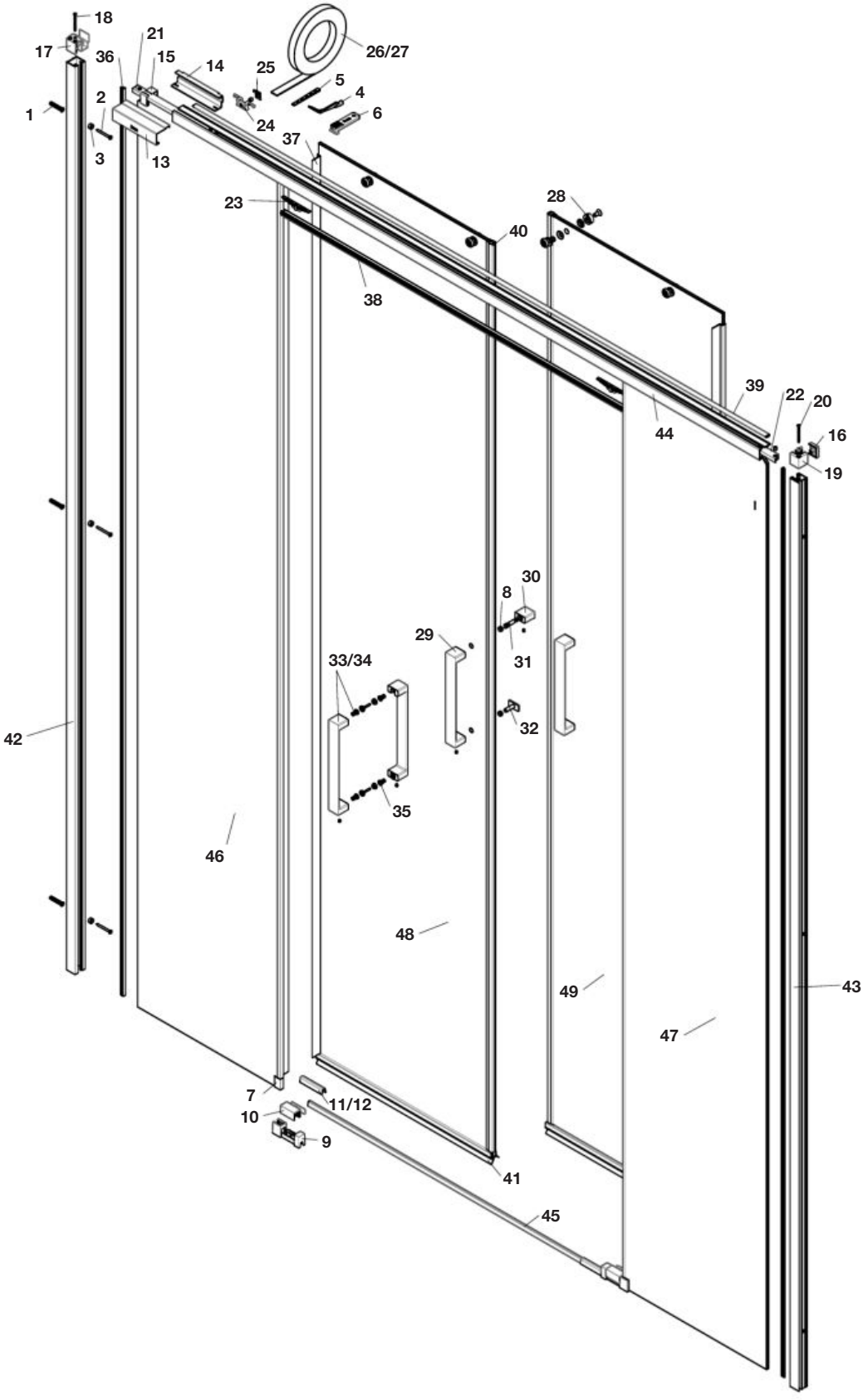

Ura-N

Ura L4-E

Sustituir (Y) de la referencia de producto por el código de color elegido:
2 Plata brillo
6 Negro mate

			€
1	3 un		
2	3 un	**AM99412000**	8,04
3	3 un		
4		**AM99412100**	4,83
5	2 un	**AM99412200**	4,47
6		**AM99412300**	4,44
7		**AM99430300**	3,66
8	2 un		
9		**AM9938860Y**	5,23
10			
11	2 un	**AM9939390Y**	7,73
12			
13		**AM9941330Y**	6,31
14			
15		**AM9941360Y**	4,80
16			
17		**AM9941370Y**	6,67
18			
19		**AM9941380Y**	7,14
20			
21		**AM99413903**	10,20
22		**AM99414003**	16,70
23		**AM99414103**	4,40

			€
24	2 un	**AM99414206**	16,10
25	2 un		
26		**AM99341500**	33,70
27		**AM99414300**	69,00
28	2 un	**AM9941440Y**	20,70
29		**AM9943040Y**	37,40
30			
31		**AM9943050Y**	8,37
32			
33	2 un	**AM9943060Y**	53,10
34	2 un		
35	2 un	**AM9943070Y**	14,40
36		**AM99414806**	11,60
37	2 un	**AM99439500**	25,30
38		**AM99415200**	9,47
39	2 un	**AM99404900**	76,70
40		**AM99415400**	12,90
41		**AM99374400**	11,20
42		**AM9941570Y**	27,10
43		**AM9943110Y**	57,40

Sólo se muestra el precio del acabado plata /
Only the price of the silver finish is shown

				€
44		**AM9941790Y**	1600	44,70
		AM9941800Y	1700	45,40
		AM9941810Y	1800	45,40
		AM9941820Y	1900	45,40
		AM9941830Y	2000	45,40
45		**AM9939060Y**		3,30
46		**AM994350M0**	1600	87,90
		AM994351M0	1700	90,10
		AM994352M0	1800	92,40
		AM994353M0	1900	102,00
		AM994354M0	2000	108,00
47		**AM994355M0**	1600	87,90
		AM994356M0	1700	90,10
		AM994357M0	1800	92,40
		AM994358M0	1900	102,00
		AM994359M0	2000	108,00
48		**AM994360M0**	1600	94,00
		AM994361M0	1700	101,00
		AM994362M0	1700-2000	103,00
49		**AM994363M0**	1600	94,00
		AM994364M0	1700	101,00
		AM994365M0	1700-2000	103,00

Ura-N

Ura PE

AM20M3207D001.NMN	800
AM20M3847D001.NMN	900
AM20M3E87D001.NMN	1000

Sustituir (Y) de la referencia de producto por el código de color elegido:
2 Plata brillo
6 Negro mate

				€
1	3 un			
2	3 un	**AM99411700**		16,00
3	2 un			
4	3 un	**AM99348000**		7,94
5		**AM9943040Y**		37,40
6				
7		**AM9943050Y**		8,37
8				
9	2 un	**AM9943060Y**		53,10
10	2 un			
11	2 un	**AM9943070Y**		14,40
12				
13		**AM9940160Y**		125,00
14	2 un			
15				
16	2 un	**AM99401803**		87,30
17	2 un			
18	2 un	**AM99401900**		80,70
19	2 un	**AM9940200Y**		89,00
20	2 un			
21	3 un			
22		**AM99402100**		90,00
23				
24		**AM99430800**		12,20
25				
26		**AM99415400**		12,90
27		**AM99445500**		-
28		**AM99404500**		74,30
29		**AM99438303**		12,20
30	2 un	**AM9943100Y**		10,70
31		**AM9939060Y**		3,30
32		**AM9940530Y**		136,00
33		**AM9943130Y**		23,60
34		**AM9943140Y**		28,10
35		**AM9943150Y**		26,70
36		**AM994370MY**	800	142,00
		AM994371MY	900	151,00
		AM994372MY	1000	163,00

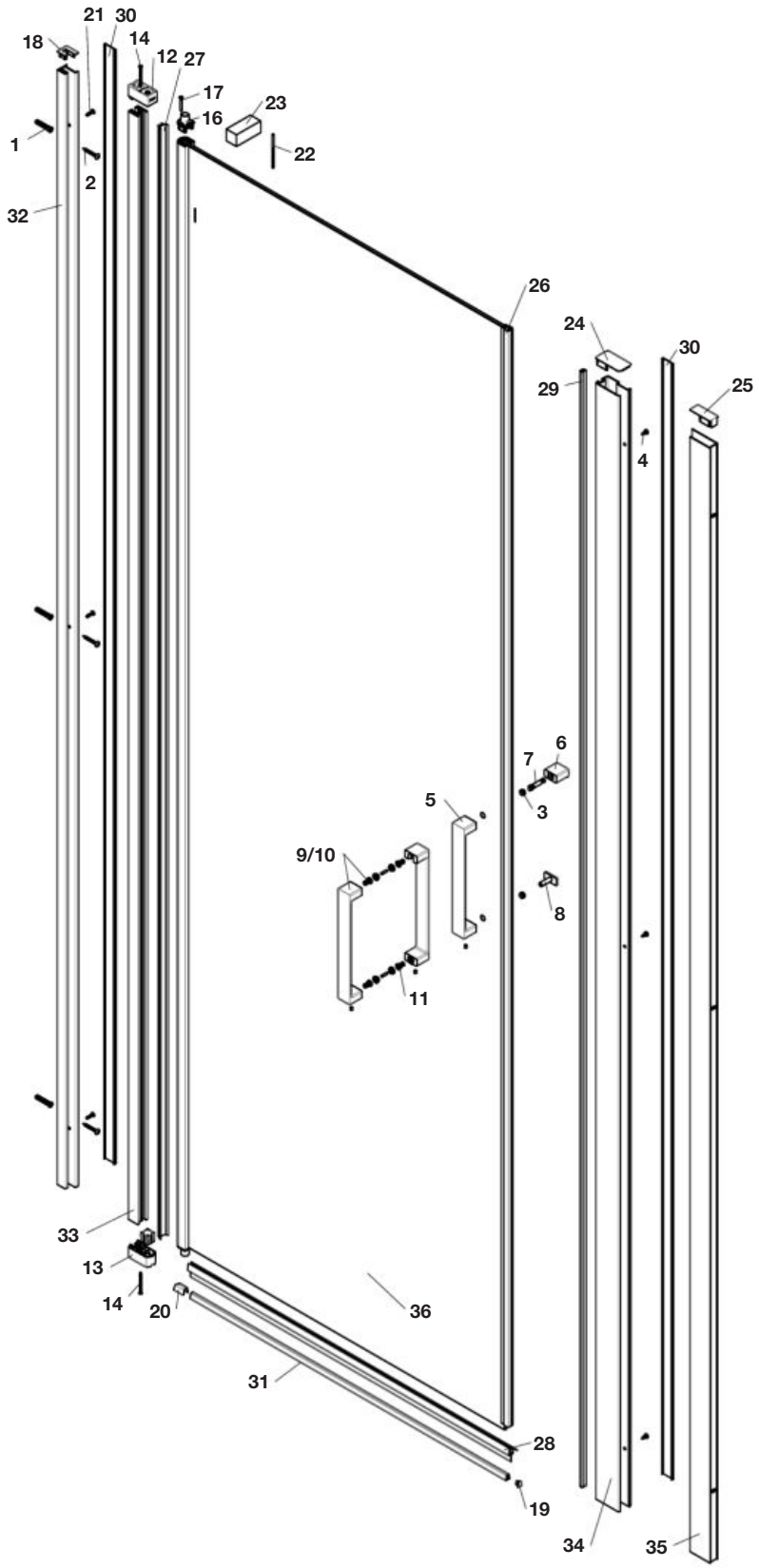

Sólo se muestra el precio del acabado plata /
Only the price of the silver finish is shown

Ura-N

Ura LF

AM20N2BC7D001.NMN	700
AM20N2EE7D001.NMN	750
AM20N3207D001.NMN	800
AM20N3847D001.NMN	900

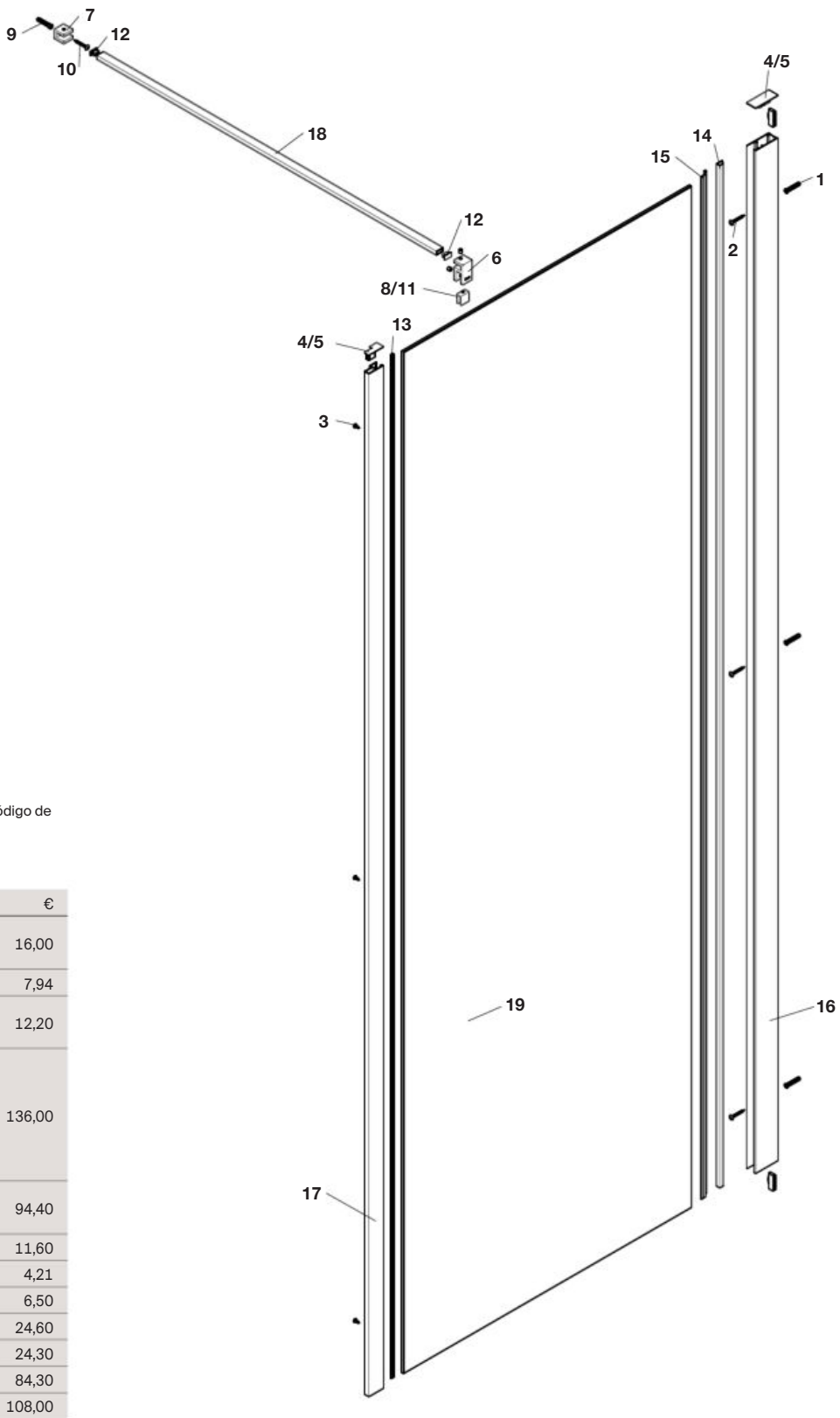

Sustituir (Y) de la referencia de producto por el código de color elegido:
2 Plata brillo
6 Negro mate

				€
1	3 un	**AM99411700**		16,00
2	3 un			
3	3 un	**AM99348000**		7,94
4	2 un	**AM99430800**		12,20
5	2 un			
6		**AM9940110Y**		136,00
7				
8				
9				
10				
11		**AM99401300**		94,40
12	2 un			
13		**AM99414806**		11,60
14	2 un	**AM9939480Y**		4,21
15	2 un	**AM99394900**		6,50
16		**AM9943160Y**		24,60
17		**AM9939520Y**		24,30
18		**AM9940520Y**		84,30
19		**AM994377M0**	700	108,00
		AM994378M0	750	113,00
		AM994379M0	800	121,00
		AM994382M0	900	128,00

Sólo se muestra el precio del acabado plata /
Only the price of the silver finish is shown

Ura-N

Ura PP-E

AM20P2BC7D001.NMN	700
AM20P3207D001.NMN	800
AM20P3847D001.NMN	900
AM20P3E87D001.NMN	1000

Sustituir (Y) de la referencia de producto por el código de color elegido:
2 Plata brillo
6 Negro mate

				€
1	3 un	**AM99411700**		16,00
2	3 un			
3	2 un	**AM99430300**		3,66
4	3 un	**AM99348000**		7,94
5		**AM9943040Y**		37,40
6				
7		**AM9943050Y**		8,37
8				
9	2 un	**AM9943060Y**		53,10
10	2 un			
11	2 un	**AM99430700**		15,70
12		**AM9940160Y**		125,00
13				
14	2 un			
15		**AM99401803**		87,30
16	2 un			
17	2 un			
18	2 un	**AM99401900**		80,70
19	2 un	**AM9940200Y**		89,00
20	2 un			
21	3 un	**AM99402100**		90,00
22				
23				
24		**AM99430800**		12,20
25				
26	4 un	**AM99407803**		12,10
27		**AM9940790Y**		30,10
28	2 un			
29		**AM99415400**		12,90
30		**AM99445500**		-
31		**AM99430900**		12,10
32		**AM99438303**		12,20
33	2 un	**AM9943100Y**		10,70
34		**AM99408100**		17,40
35				
36		**AM9939060Y**		3,30
37		**AM9940530Y**		136,00
38		**AM9943130Y**		23,60
39		**AM9943140Y**		28,10
40		**AM9943150Y**		26,70
41		**AM994373MY**	700	193,00
41		**AM994374MY**	800	206,00
41		**AM994375MY**	900	214,00
41		**AM994376MY**	1000	226,00

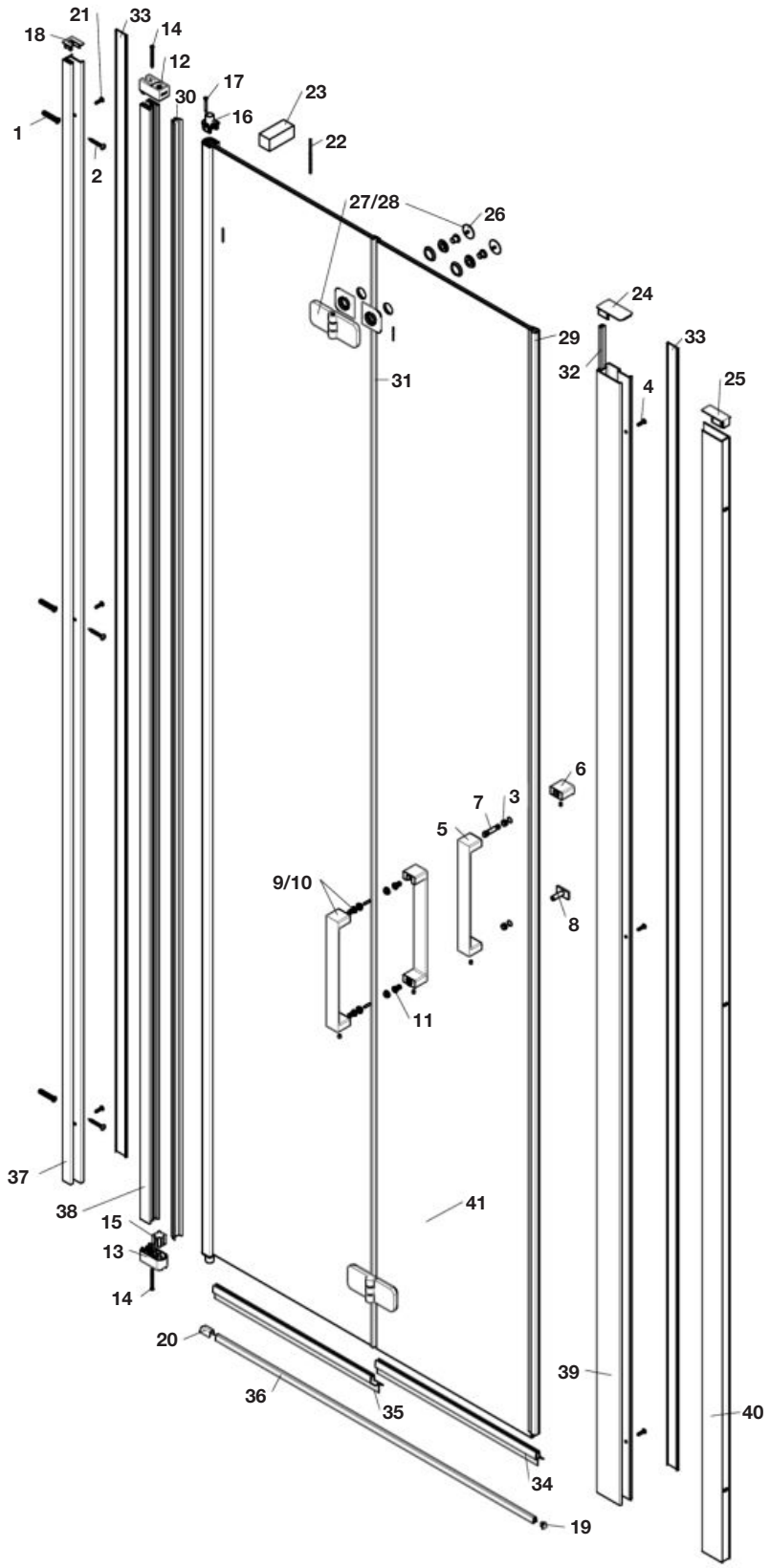

Sólo se muestra el precio del acabado plata /
Only the price of the silver finish is shown

Ura

Ura DF

AM16910012M	1000
AM16912012M	1200
AM16914012M	1400

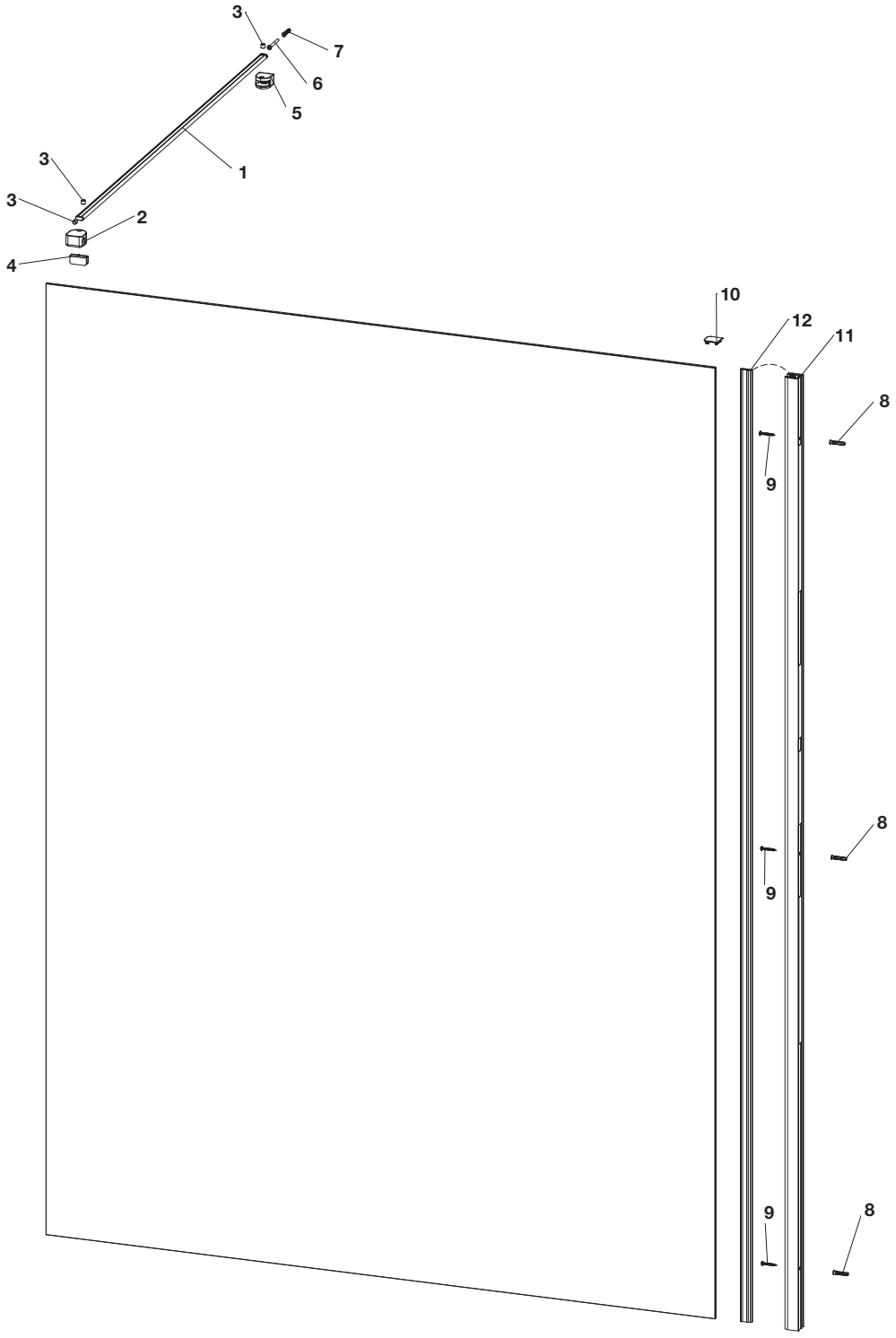

			€
1		**AM99347002**	19,30
2		**AM99347202**	23,40
3	3 un		
4			
5			
6			
7			

			€
8	3 un	**AM99327000**	6,19
9	3 un		
10		**AM99347400**	6,33
11		**AM99361212**	39,10
12		**AM99353103**	15,90

Ura

Ura 2L2

AM16507012M	700
AM16507512M	750
AM16508012M	800
AM16509012M	900
AM16510012M	1000
AM16512012M	1200

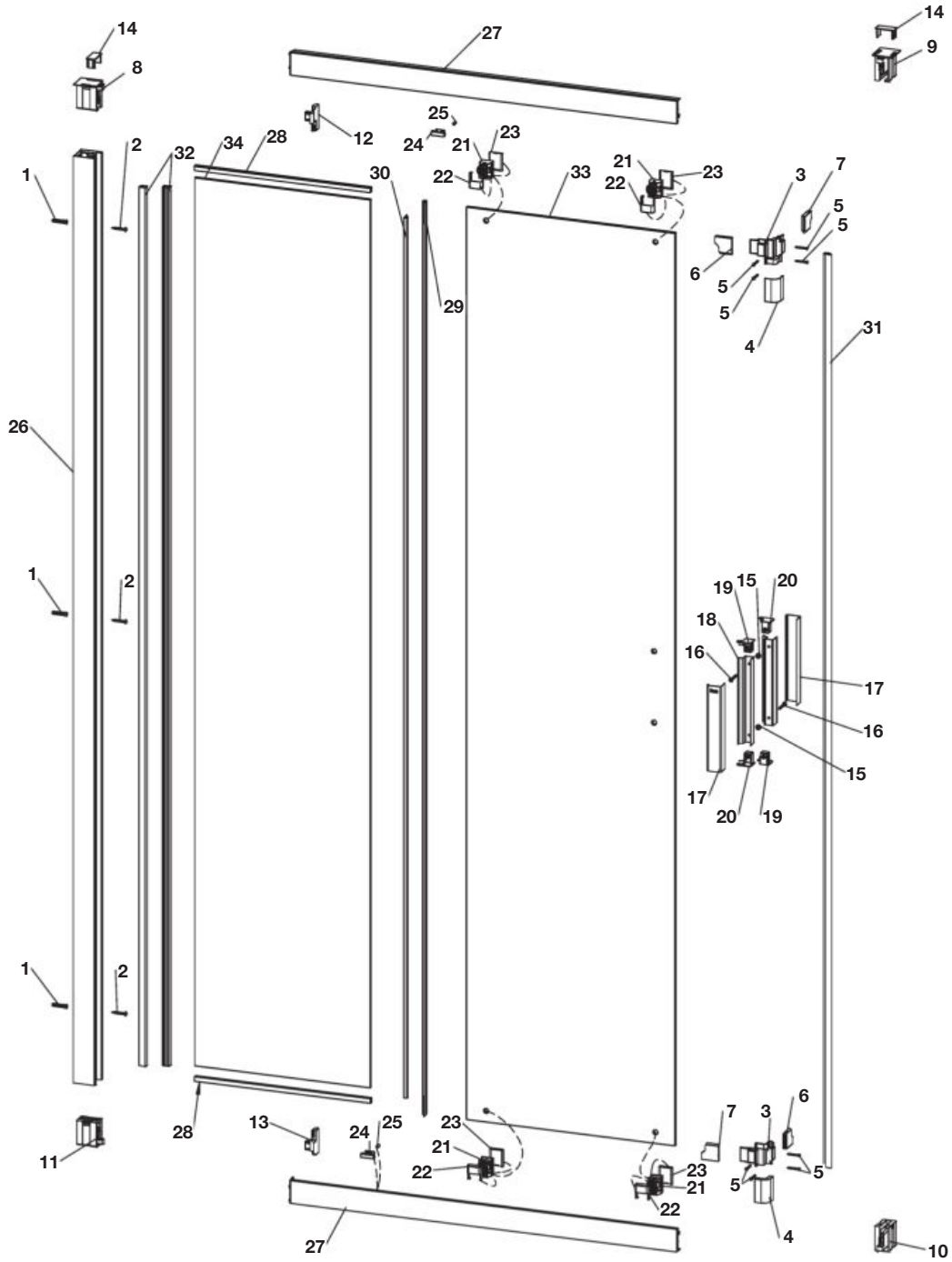

Ura

Ura 2L2

Sólo se muestra el precio del acabado plata /
Only the price of the silver finish is shown

				€
1	3 un	**AM99348100**		-
2	3 un			
3		**AM99359012**		15,10
4				
5				
6				
7	4 un			
8		**AM99359113**		13,10
9				
10		**AM99359313**		12,20
11				
12		**AM99359513**		10,90
13				
14	2 un	**AM99359713**		5,83

				€
15	2 un	**AM99359812**		26,70
16	2 un			
17	2 un			
18	2 un			
19				
20				
21	4 un	**AM99360102**		40,40
22	4 un	**AM99360202**		8,20
23	4 un			
24	2 un	**AM99360313**		7,27
25				
26		**AM99360712**		38,10
27	2 un	**AM99362212**	700	33,90
		AM99362312	750	34,90
		AM99362412	800	35,90
		AM99362512	900	38,30
		AM99362612	1000	40,70
		AM99362712	1200	45,90

				€
28		**AM99364413**		10,40
29		**AM99364610**		38,90
30				
31		**AM99364710**		19,10
32	2 un	**AM99364913**		18,10
33		**AM9936562M**	700	98,40
		AM9936572M	750	100,00
		AM9936582M	800	102,00
		AM9936592M	900	107,00
		AM9936602M	1000	102,00
		AM9936612M	1200	122,00
34		**AM9936620M**	700	62,10
		AM9936630M	750	63,90
		AM9936640M	800	66,00
		AM9936650M	900	69,90
		AM9936660M	1000	74,60

Ura

Ura MR

AM16608012M	800
AM16609012M	900

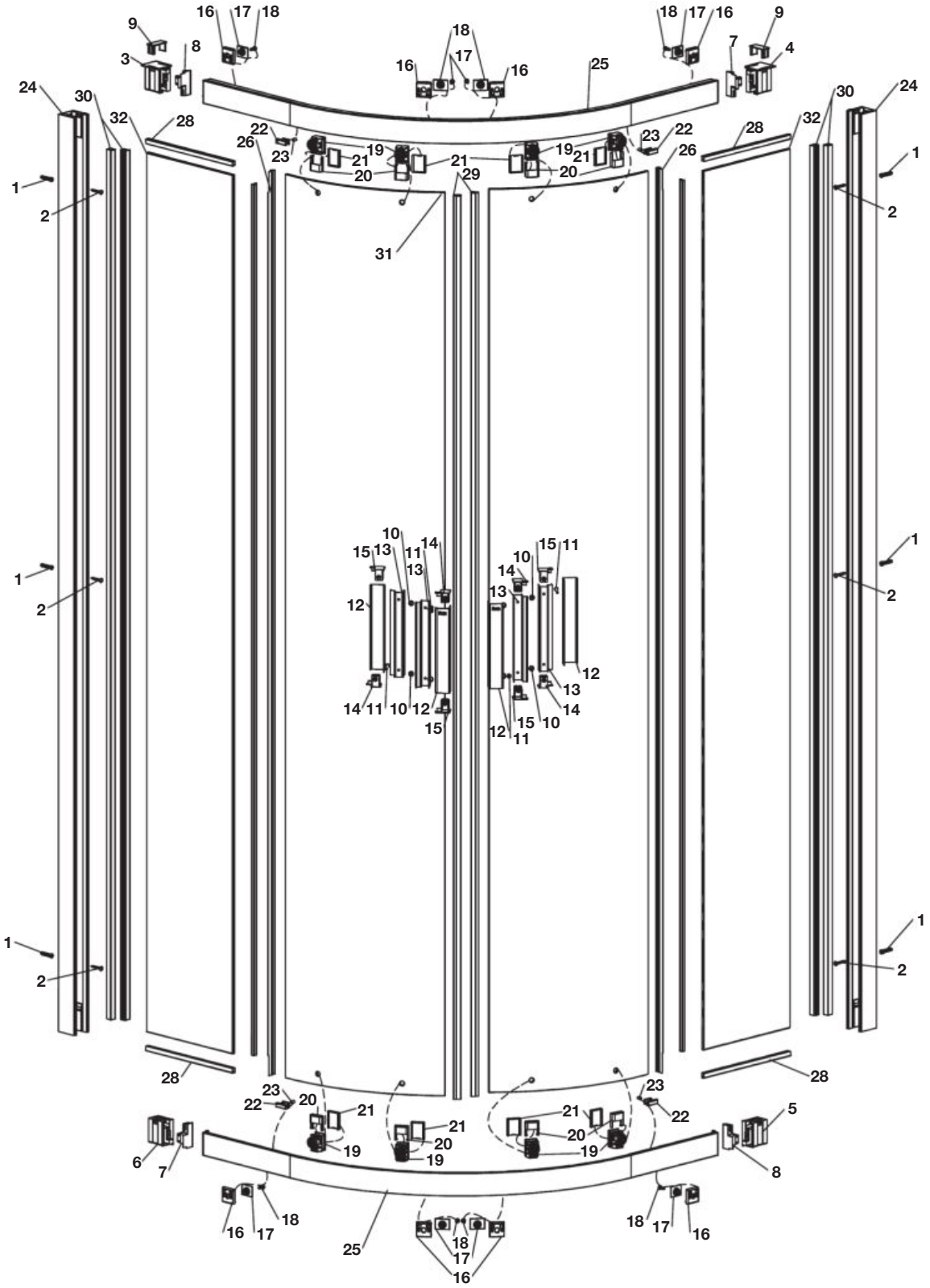

Ura

Ura MR

			€
1	3 un	**AM99327000**	6,19
2	3 un		
3		**AM99359113**	13,10
4			
5		**AM99359313**	12,20
6			
7		**AM99359513**	10,90
8			
9	2 un	**AM99359713**	5,83

			€
10	2 un	**AM99359812**	26,70
11	2 un		
12	2 un		
13	2 un		
14			
15			
16		**AM99359903**	7,37
17	4 un		
18			
19	4 un	**AM99360102**	40,40
20	4 un	**AM99360202**	8,20
21	4 un		

				€
22	2 un	**AM99360313**		7,27
23				
24		**AM99360712**		38,10
25	2 un	**AM99360812**	800	59,90
		AM99360912	900	61,60
26	2 un	**AM99364310**		16,40
27	2 un			
28		**AM99364413**		10,40
29		**AM99364810**		19,60
30	2 un	**AM99364913**		18,10
31		**AM9936682M**	800-900	114,00
32		**AM9936690M**	800	60,30
		AM9936700M	900	68,10

Ura

Ura L2E

AM16210012M	1000
AM16211012M	1100
AM16212012M	1200
AM16213012M	1300
AM16214012M	1400
AM16215012M	1500
AM16216012M	1600

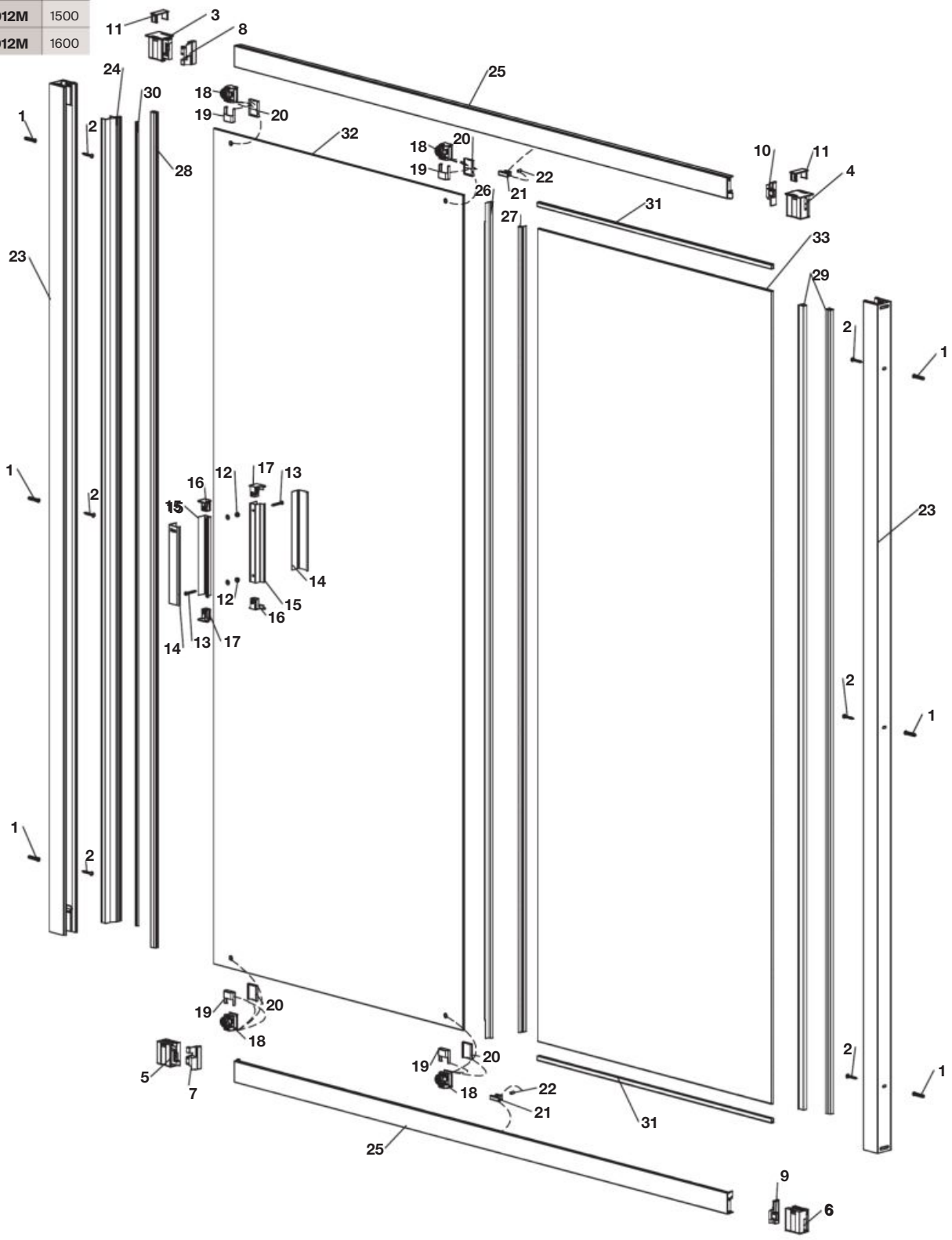

Ura

Ura L2E

				€
1	3 un	**AM99327000**		6,19
2				
3		**AM99359113**		13,10
4				
5		**AM99359313**		12,20
6				
7		**AM99359413**		11,10
8				
9		**AM99359513**		10,90
10				
11	2 un	**AM99359713**		5,83
12	2 un	**AM99359812**		26,70
13	2 un			
14	2 un			
15	2 un			
16	1 un			
17	1 un			
18	4 un	**AM99360102**		40,40

				€
19	4 un	**AM99360202**		8,20
20	4 un			
21	2 un	**AM99360313**		7,27
22				
23	2 un	**AM99360712**		38,10
24		**AM99362012**		18,30
25	2 un	**AM99362812**	1000	41,40
		AM99362912	1100	44,00
		AM99363012	1200	46,70
		AM99363112	1300	49,00
		AM99363212	1400	51,30
		AM99363312	1500	53,90
		AM99363412	1600	56,00
26		**AM99364610**		38,90
27				
28		**AM99364810**		19,60
29		**AM99364913**		18,10
30		**AM99365013**		18,10

				€
31	2 un	**AM99364413**		10,40
32		**AM9936712M**	1000	114,00
		AM9936722M	1100	120,00
		AM9936732M	1200	125,00
		AM9936742M	1300	129,00
		AM9936752M	1400	134,00
		AM9936762M	1500	138,00
		AM9936772M	1600	144,00
33		**AM9936780M**	1000	74,30
		AM9936790M	1100	78,40
		AM9936800M	1200	83,30
		AM9936810M	1300	88,30
		AM9936820M	1400	93,00
		AM9936830M	1500	99,70
		AM9936840M	1600	102,00

Ura

Ura L4-E

AM16316012M	1600
AM16317012M	1700
AM16318012M	1800
AM16319012M	1900
AM16320012M	2000

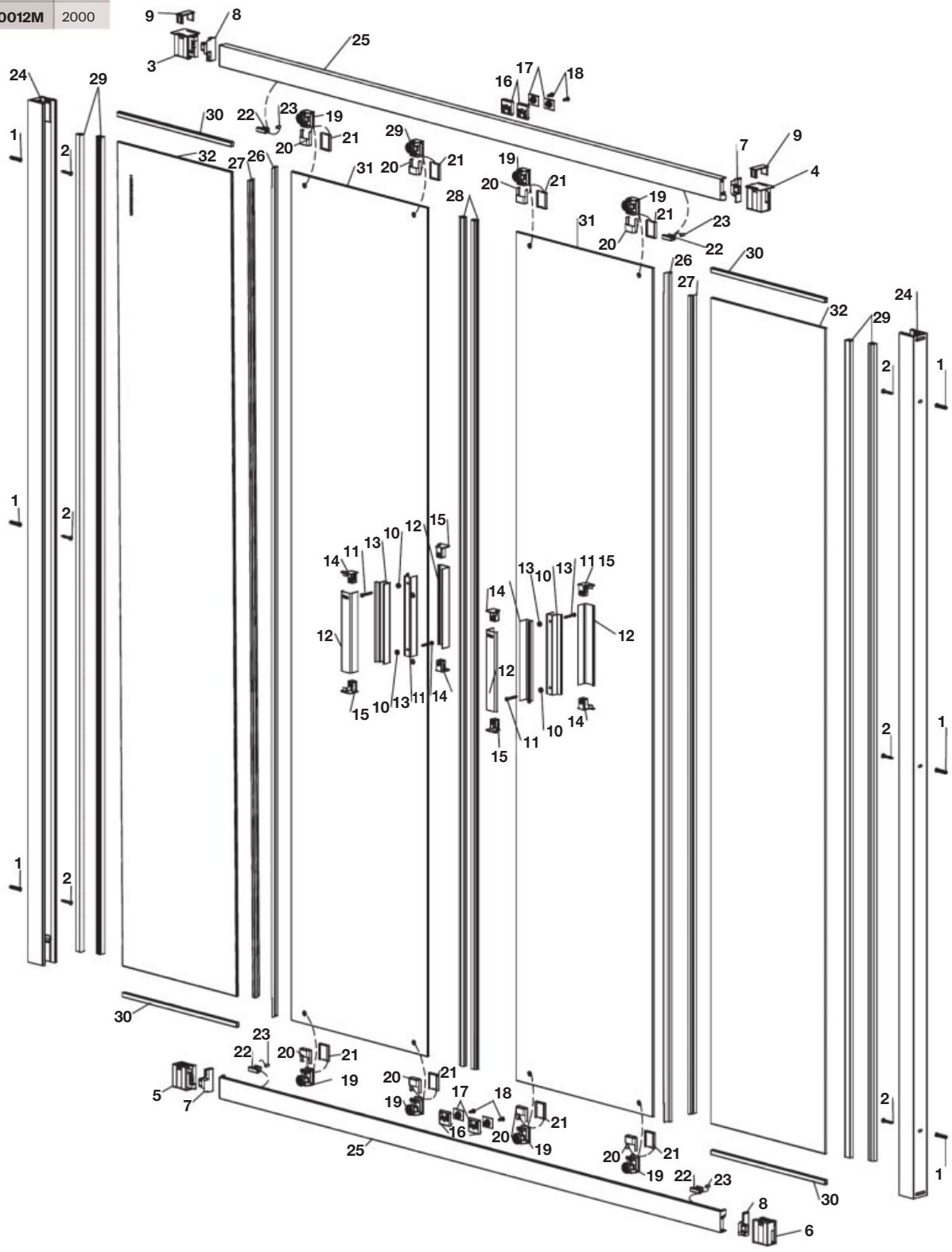

Ura

Ura L4-E

				€
1	3 un	**AM99327000**		6,19
2	3 un			
3		**AM99359113**		13,10
4				
5		**AM99359313**		12,20
6				
7		**AM99359513**		10,90
8				
9	2 un	**AM99359713**		5,83
10	2 un	**AM99359812**		26,70
11	2 un			
12	2 un			
13	2 un			
14				
15				

				€
16	4 un	**AM99359903**		7,37
17	4 un			
18	4 un			
19	4 un	**AM99360102**		40,40
20	4 un	**AM99360202**		8,20
21	4 un			
22	2 un	**AM99360313**		7,27
23				
24	2 un	**AM99360712**		38,10
25	2 un	**AM99363512**	1600	39,30
	2 un	**AM99363612**	1700	45,10
	2 un	**AM99363712**	1800	46,60
	2 un	**AM99363812**	1900	48,00
	2 un	**AM99363912**	2000	49,00

				€
26	**AM99364610**			38,90
27				
28	**AM99364810**			19,60
29	**AM99364913**			18,10
30	**AM99364413**			10,40
31	**AM9936852M**		1600	106,00
	AM9936862M		1700	107,00
	AM9936872M		1800	110,00
	AM9936882M		1900	112,00
	AM9936892M		2000	115,00
32	**AM9936900M**		1600	68,30
	AM9936910M		1700	70,30
	AM9936920M		1800	72,00
	AM9936930M		1900	74,70
	AM9936940M		2000	76,90

Ura

Ura LF

AM16807012M	700
AM16807512M	750
AM16808012M	800
AM16809012M	900

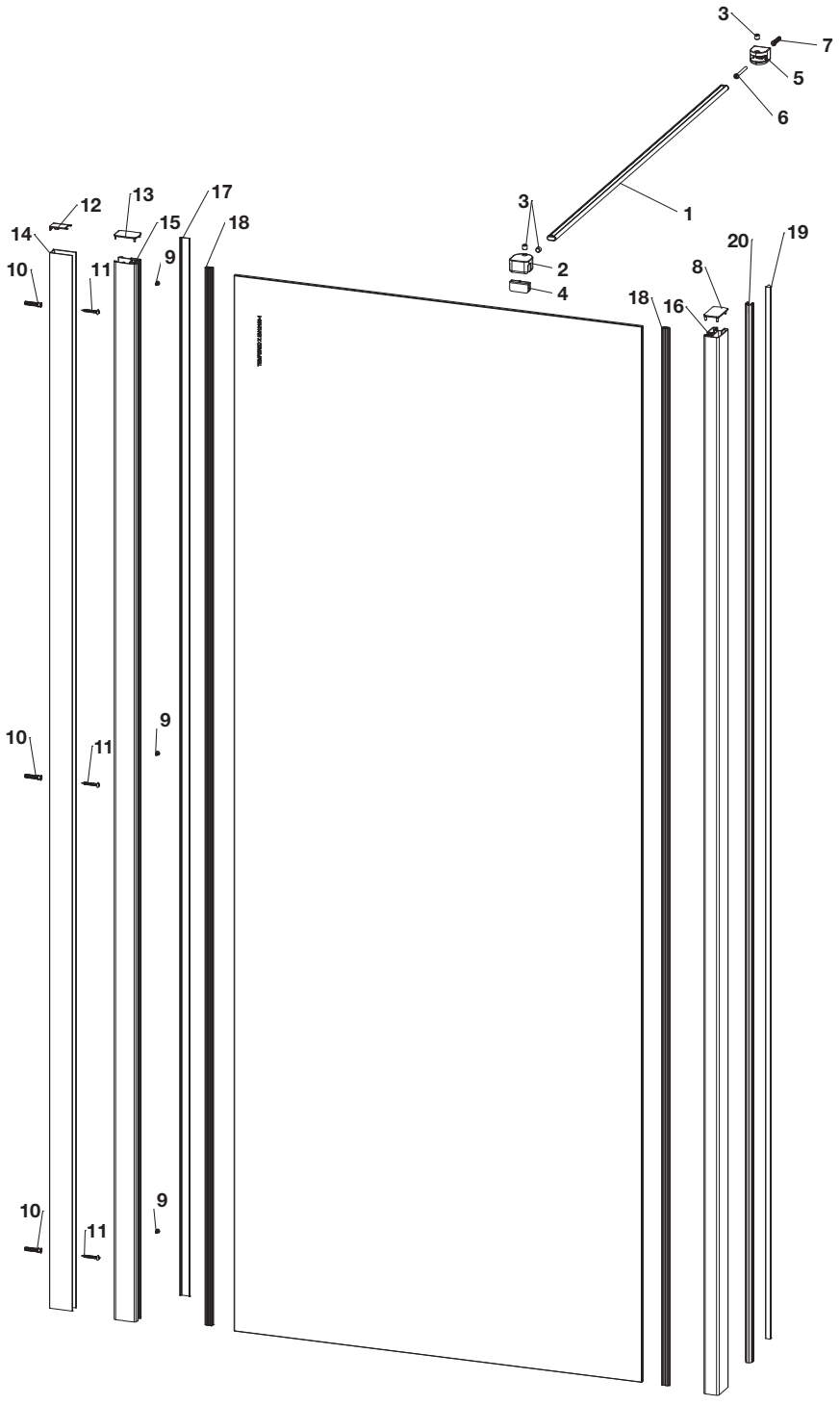

			€
1		**AM99347002**	19,30
2		**AM99347202**	23,40
3	3 un		
4			
5			
6			
7			

			€
8		**AM99359210**	5,93
9	3 un	**AM99348000**	7,94
10	3 un	**AM99347300**	9,03
11	3 un		
12	2 un	**AM99360412**	13,60
13			
14		**AM99361612**	26,10

			€
15		**AM99361812**	33,00
16		**AM99362102**	39,10
17		**AM99364113**	15,90
18	2 un	**AM99365113**	17,40
19		**AM99365313**	20,90
20		**AM99365410**	17,60

Ura

Ura LF-C

AM16407012M	700
AM16407512M	750
AM16408012M	800
AM16409012M	900

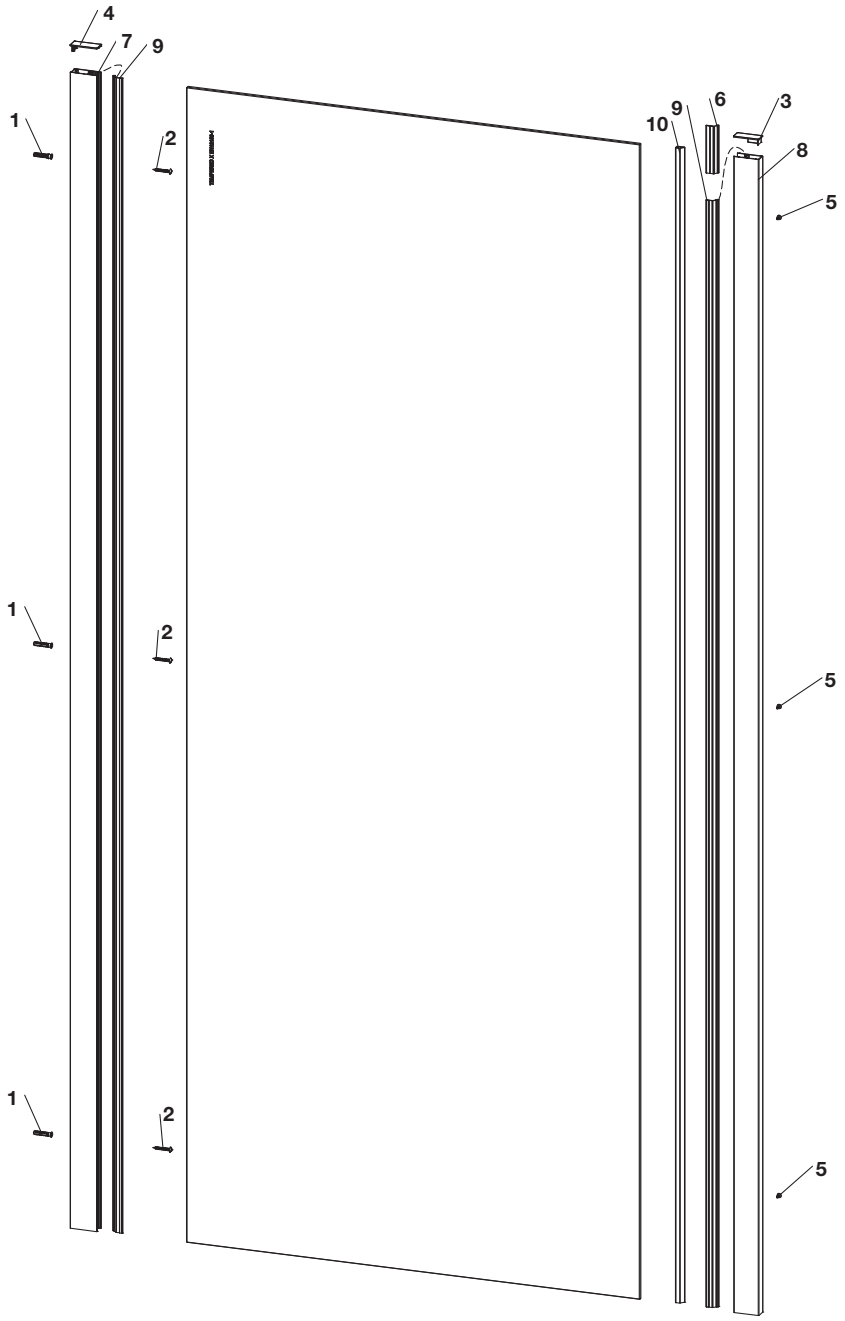

			€
1	3 un	**AM99327000**	6,19
2	3 un		
3		**AM99359610**	9,64
4			
5	3 un	**AM99348000**	7,94

		€
6	**AM99360013**	8,63
7	**AM99361012**	35,70
8	**AM99361112**	34,40
9	**AM99364213**	16,60
10	**AM99364513**	16,60

Ura

Ura PE

AM16708012M	800
AM16709012M	900
AM16710012M	1000

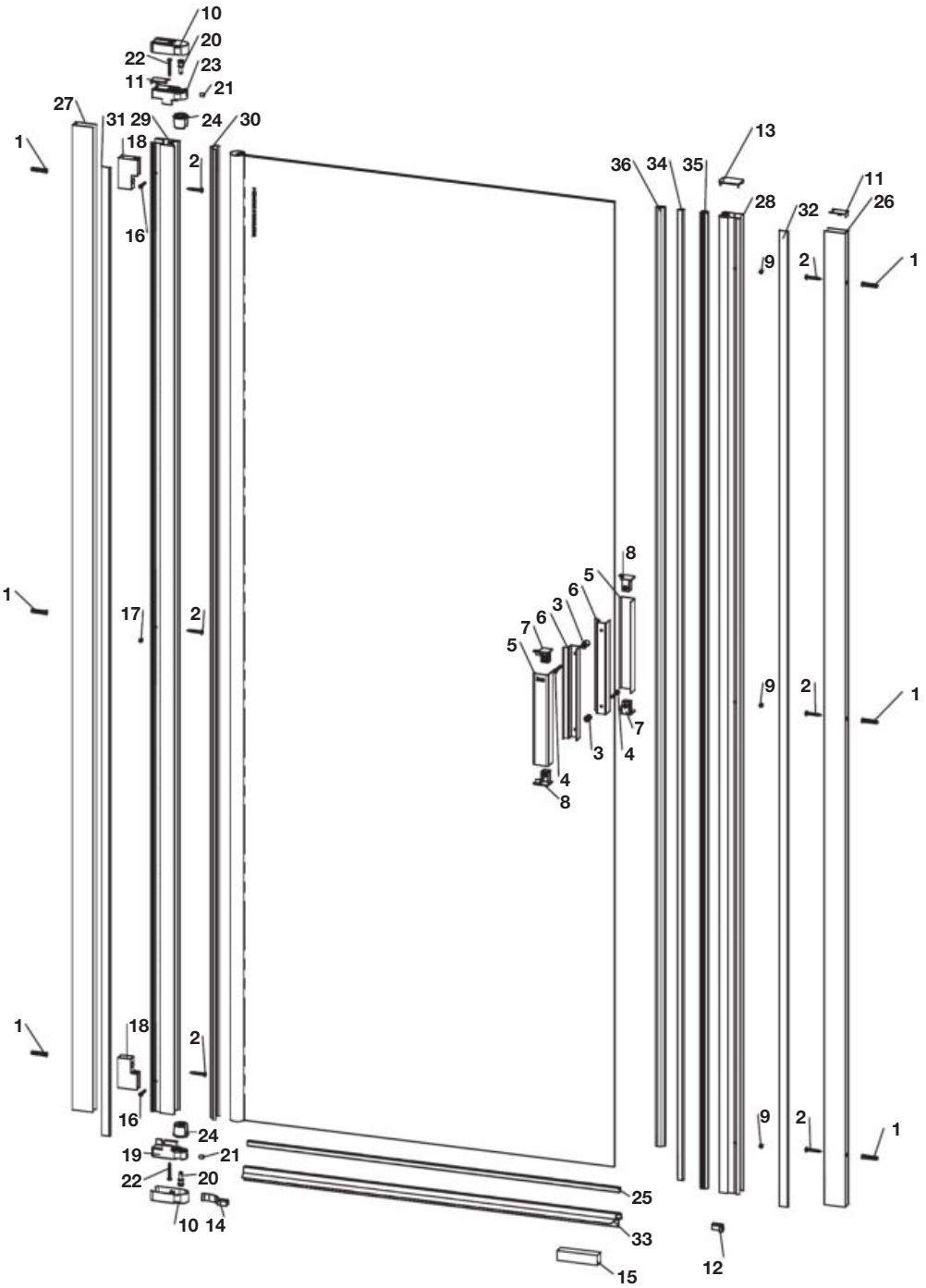

Ura

Ura PE

				€
1	3 un	**AM99347300**		9,03
2	3 un			
3	2 un	**AM99359812**		26,70
4	2 un			
5	2 un			
6	2 un			
7				
8				
9	3 un	**AM99348000**		7,94
10		**AM99360412**		13,60
11	2 un			
12				
13				
14				
15				

				€
16	2 un	**AM99360500**		12,40
17				
18	2 un			
19		**AM99360613**		14,00
20	2 un			
21	2 un			
22	2 un			
23				
24	2 un			
25		**AM99361312**	800	9,71
		AM99361412	900	9,89
		AM99361512	1000	10,10
26		**AM99361612**		26,10
27		**AM99361712**		28,10
28		**AM99361812**		33,00

		€
29	**AM99361912**	38,30
30	**AM99355000**	14,40
31	**AM99364013**	15,90
32	**AM99364113**	15,90
33	**AM99365210**	10,70
34	**AM99365313**	20,90
35	**AM99365410**	17,60
36	**AM99365500**	19,10

Ura (Old)

Ura DF

AM13510012	1000
AM13512012	1200
AM13514012	1400

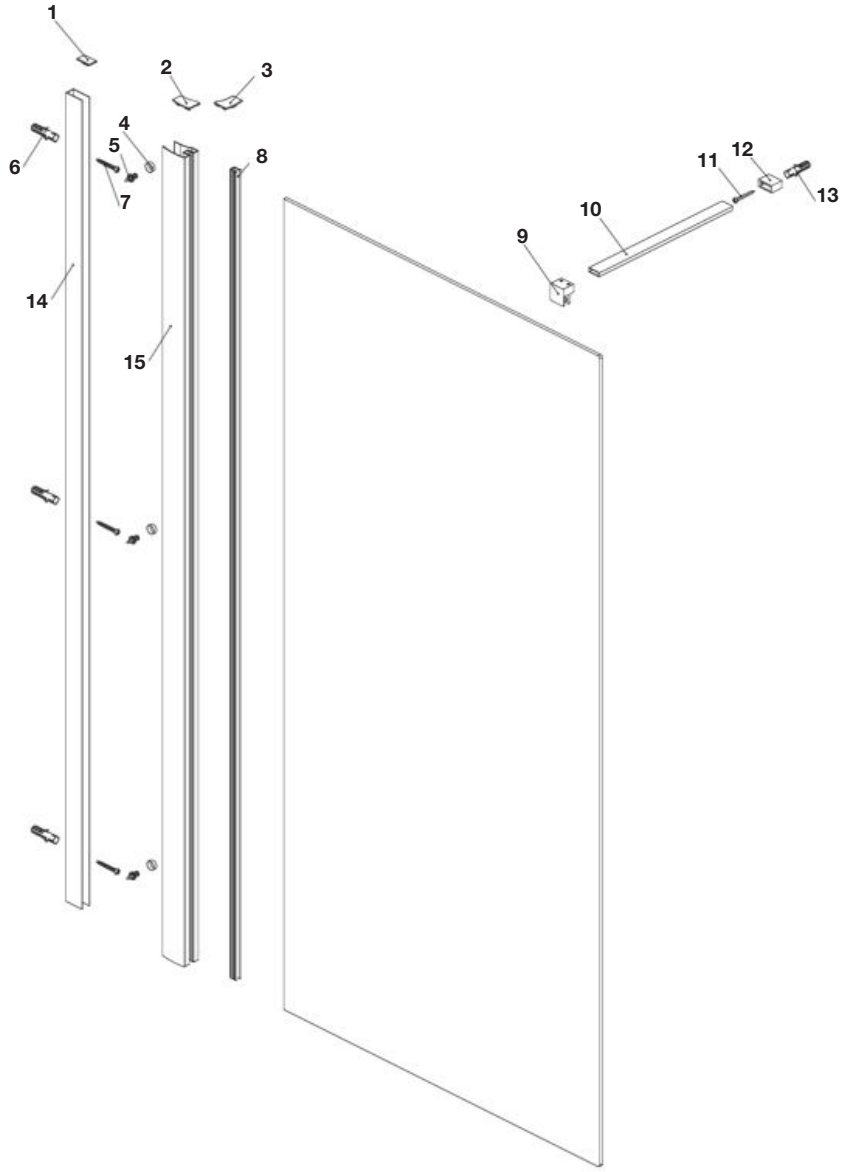

			€
1	2 un		
2		**AM99295800**	7,16
3			
4	12 un		
5	6 un		
6	6 un	**AM99296002**	7,73
7	14 un		
8		**AM99296400**	5,47

			€
9			
10			
11		**AM99296302**	69,10
12			
13			
14		**AM99299502**	43,30
15		**AM99299902**	62,00

Ura (Old)

Ura 2L2

AM13907012	700
AM13907512	750
AM13908012	800
AM13909012	900
AM13910012	1000
AM13912012	1200

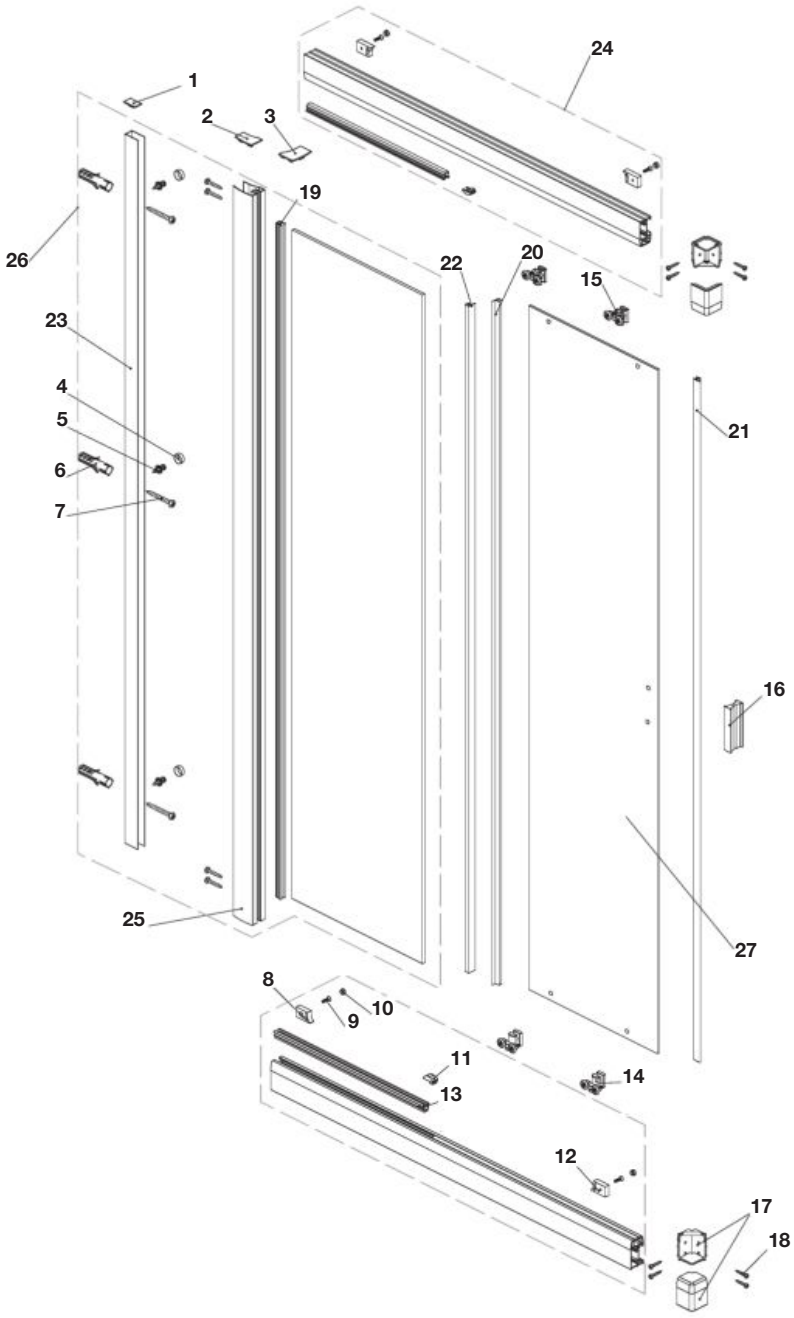

			€
1	2 un	**AM99295800**	7,16
2			
3			
4	12 un	**AM99296002**	7,73
5	6 un		
6	6 un		
7	14 un		
8	4 un	**AM99295902**	18,50
9	8 un		
10	8 un		
11	4 un		
12	4 un		
13	2,5 m	**AM99323600**	5,74
14	2 un	**AM99295602**	70,30
15	2 un		

				€
16		**AM99295702**		29,30
17	2 m	**AM99296102**		13,40
18	8 un			
19	4 m	**AM99296500**		7,44
20	2 un	**AM99297000**		12,60
21	2 un	**AM99394700**		5,04
22	2 un	**AM99296900**		12,10
23		**AM99299502**		43,30
24		**AM99316402**	700	23,40
		AM99316502	750	24,90
		AM99316602	800	26,10
		AM99316702	900	29,40
		AM99316802	1000	32,90
		AM99316902	1200	39,00
25		**AM99299802**		53,00

			€
26	**AM99312912**	700	69,60
	AM99313012	750	71,10
	AM99313112	800	73,30
	AM99313212	900	76,60
	AM99311612	1000	N.D.
	AM99312012	1200	106,00
27	**AM99314610**	700	36,60
	AM99314710	750	38,30
	AM99314810	800	39,90
	AM99314910	900 1000 1200	42,90

Ura (Old)

Ura MR

AM14008012	800 (R.500)
AM14009012	900 (R.500)

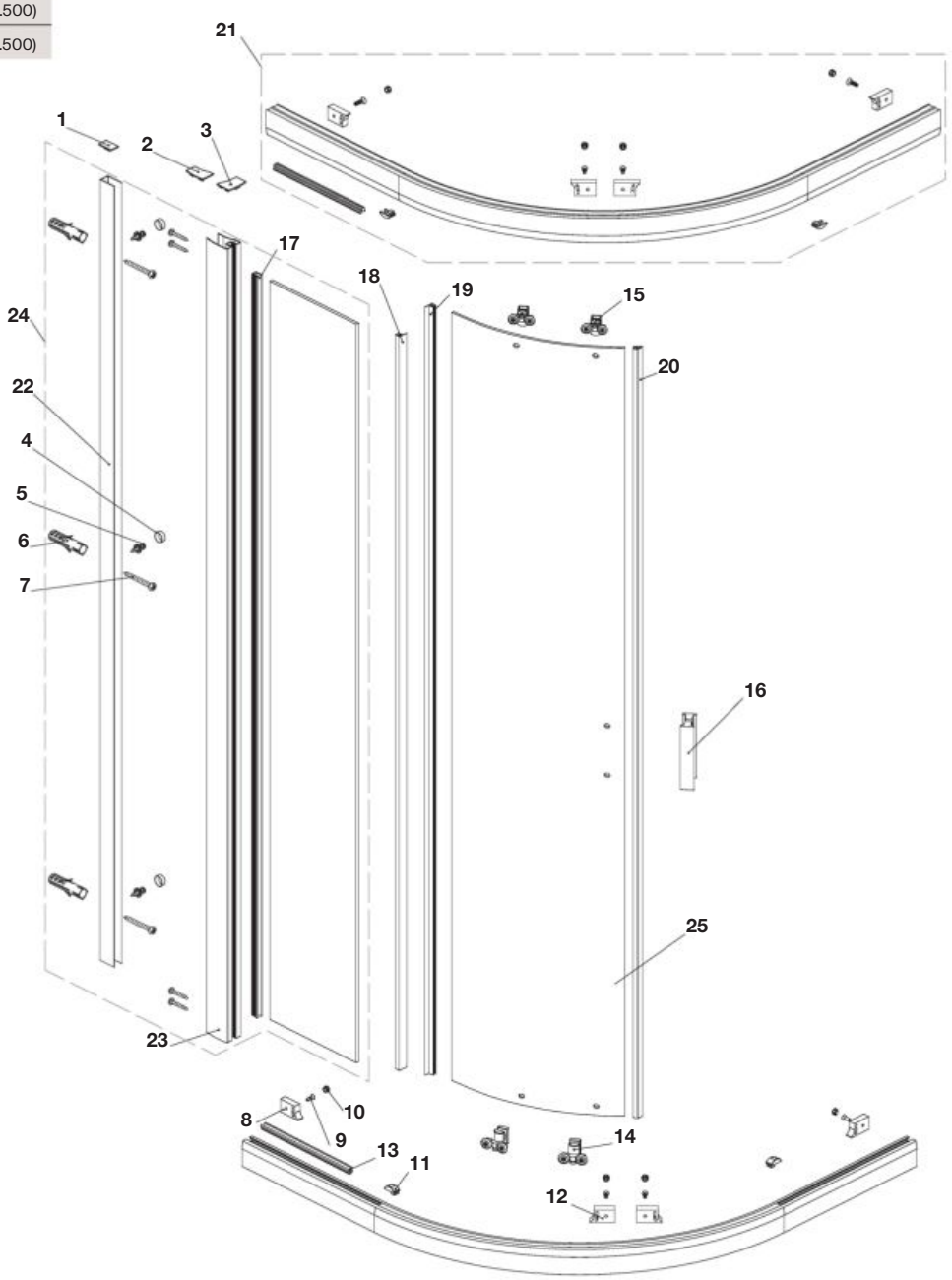

			€
1	2 un	**AM99295800**	7,16
2			
3			
4	12 un	**AM99296002**	7,73
5	6 un		
6	6 un		
7	14 un		
8	4 un	**AM99295902**	18,50
9	8 un		
10	8 un		
11	4 un		
12	4 un		
13	2,5 m	**AM99323600**	5,74

				€
14	2 un	**AM99295602**		70,30
15	2 un			
16		**AM99295702**		29,30
17		**AM99296500**		7,44
18	2 un	**AM99297000**		12,60
19	2 un	**AM99296900**		12,10
20	2 un	**AM99394700**		5,04
21		**AM99316202**	800	33,00
		AM99316302	900	35,90
22		**AM99299502**		43,30
23		**AM99299802**		53,00
24		**AM99312712**	800	85,70
		AM99312812	900	92,00
25		**AM99314510**		63,40

Ura (Old)

Ura L2-E

AM13610012	1000
AM13611012	1100
AM13612012	1200
AM13613012	1300
AM13614012	1400
AM13615012	1500
AM13616012	1600

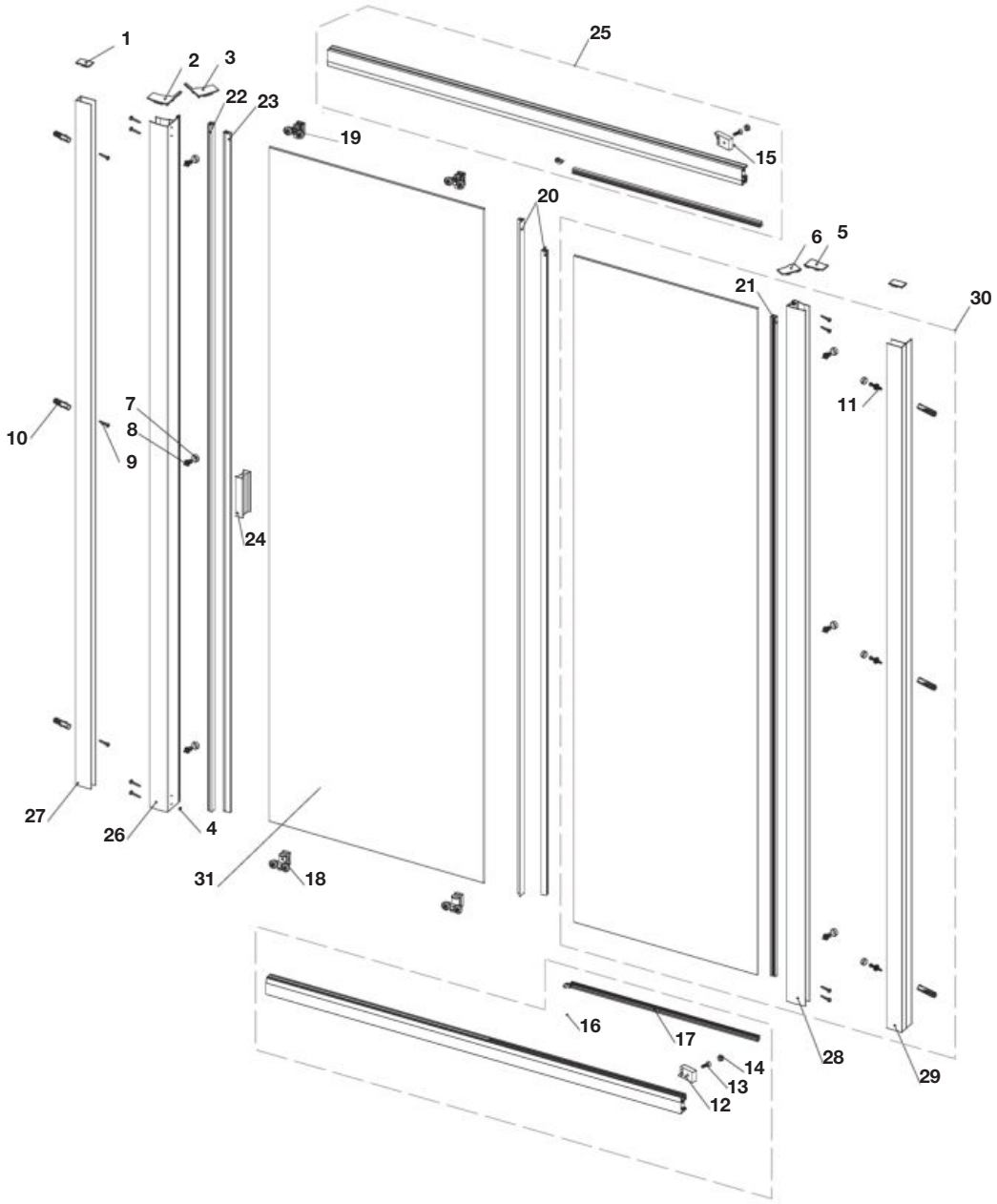

			€
1	2 un	**AM99295800**	7,16
2			
3			
4			
5			
6			
7	12 un	**AM99296002**	7,73
8	6 un		
9	6 un		
10	6 un		
11	14 un		
12	4 un	**AM99295902**	18,50
13	8 un		
14	8 un		
15	4 un		
16	4 un		
17	2,5 un	**AM99323600**	5,74

				€
18	2 un	**AM99295602**		70,30
19	2 un			
20	2 un	**AM99297000**		12,60
21	4 m	**AM99296500**		7,44
22		**AM99296800**		7,94
23		**AM99266600**		36,80
24		**AM99295702**		29,30
25		**AM99315002**	1000	30,90
		AM99315102	1100	35,10
		AM99315202	1200	38,10
		AM99315302	1300	40,90
		AM99315402	1400	44,40
		AM99315502	1500	47,70
		AM99315602	1600	50,60
26		**AM99299702**		55,10
27		**AM99299502**		43,30
28		**AM99299802**		53,00

			€
29	**AM99299602**		49,10
30	**AM99311512**	1000	89,70
	AM99311612	1100	N.D.
	AM99311712	1200	96,00
	AM99311812	1300	99,00
	AM99311912	1400	102,00
	AM99312012	1500	106,00
	AM99312112	1600	109,00
31	**AM99313310**	1000	52,10
	AM99313410	1100	55,60
	AM99313510	1200	58,60
	AM99313610	1300	62,30
	AM99313710	1400	65,70
	AM99313810	1500	279,00
	AM99313910	1600	N.D.

Ura (Old)

Ura L4-E

AM13716012	1600
AM13717012	1700
AM13718012	1800
AM13719012	1900
AM13720012	2000

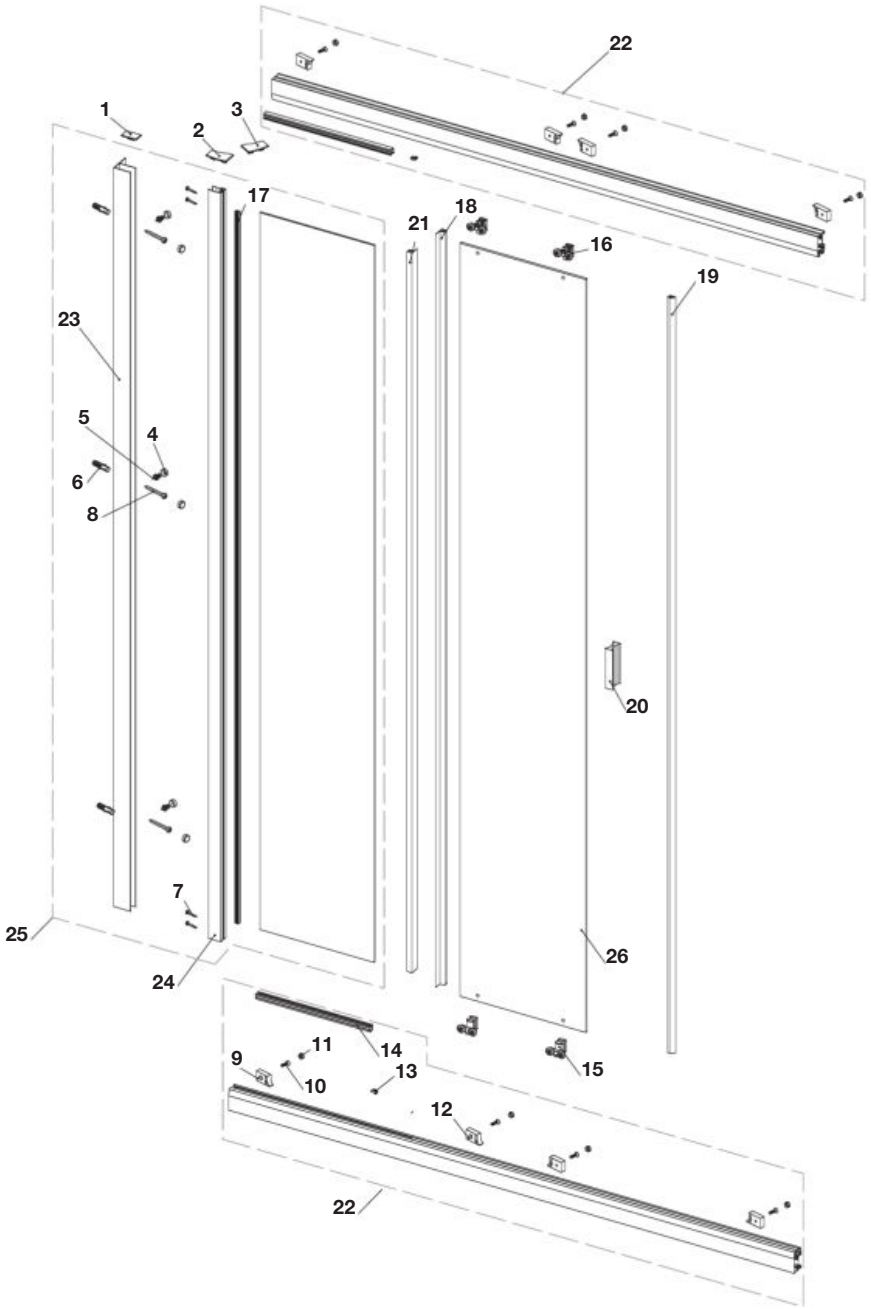

			€
1	2 un		
2		**AM99295800**	7,16
3			
4	12 un		
5	6 un		
6	6 un	**AM99296002**	7,73
7	14 un		
8	6 un		
9	4 un		
10	8 un		
11	8 un	**AM99295902**	18,50
12	4 un		
13	4 un		
14	2,5 m	**AM99323600**	5,74

				€
15	2 un	**AM99295602**		70,30
16	2 un			
17	4 m	**AM99296500**		7,44
18	2 un	**AM99297000**		12,60
19	2 un	**AM99394700**		5,04
20		**AM99295702**		29,30
21	2 un	**AM99296900**		12,10
22		**AM99315702**	1600	26,70
		AM99315802	1700	28,10
		AM99315902	1800	29,70
		AM99316002	1900	30,90
		AM99316102	2000	33,00
23		**AM99299602**		49,10
24		**AM99299802**		53,00

			€
25	**AM99312212**	1600	80,60
	AM99312312	1700	N.D.
	AM99312412	1800	83,70
	AM99312512	1900	84,90
	AM99312612	2000	86,70
26	**AM99314010**	1600	43,70
	AM99314110	1700	45,10
	AM99314210	1800	47,10
	AM99314310	1900	49,00
	AM99314410	2000	65,90

Ura (Old)

Ura LF

AM13807012	700
AM13807512	750
AM13808012	800
AM13809012	900

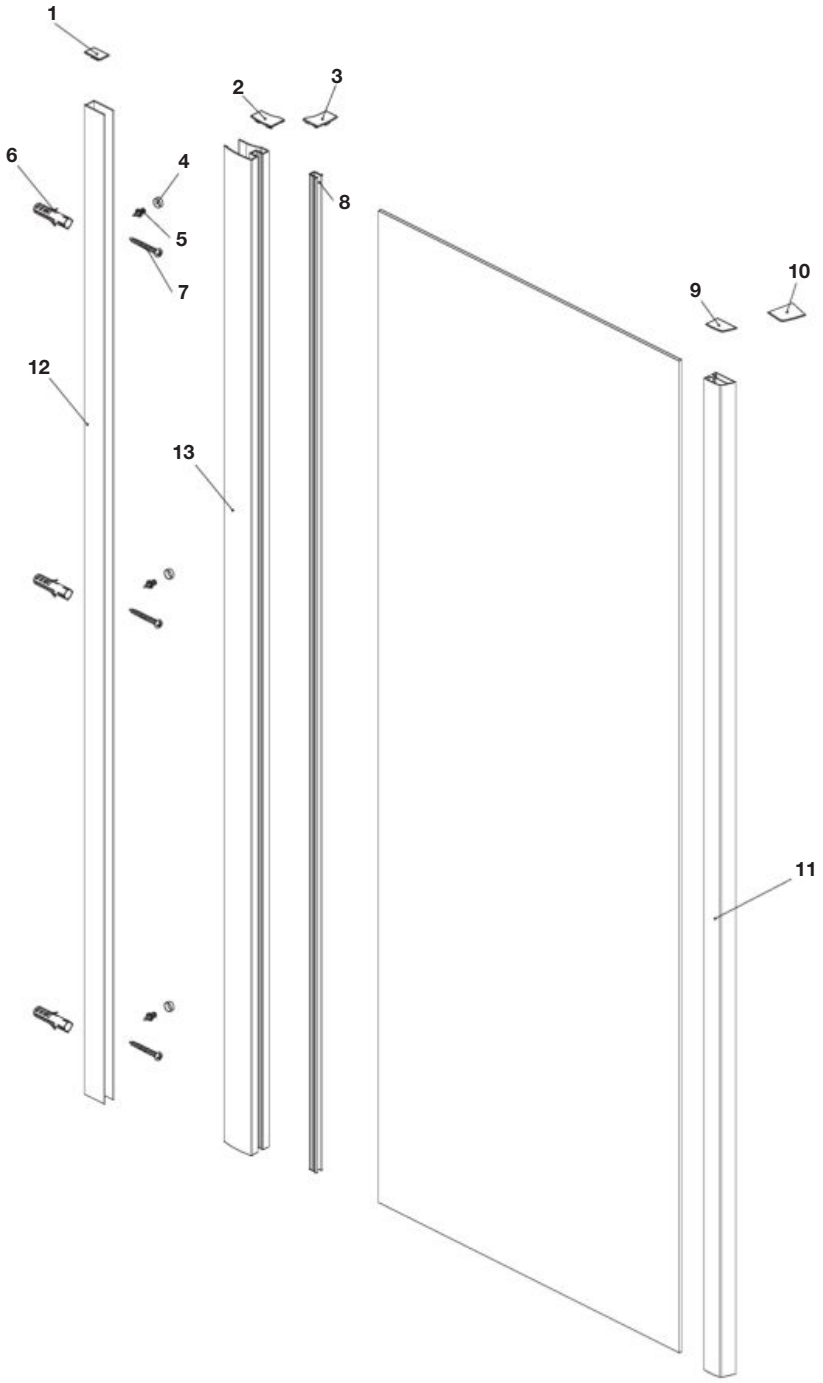

			€
1	2 un	**AM99295800**	7,16
2			
3			
4	12 un	**AM99296002**	7,73
5	6 un		
6	6 un		
7	14 un		

		€
8	**AM99296500**	7,44
9	**AM99296200**	4,30
10		
11	**AM99300002**	N.D.
12	**AM99299502**	43,30
13	**AM99299802**	53,00

Ura (Old)

Ura PE

AM14108012	800
AM14109012	900
AM14110012	1000

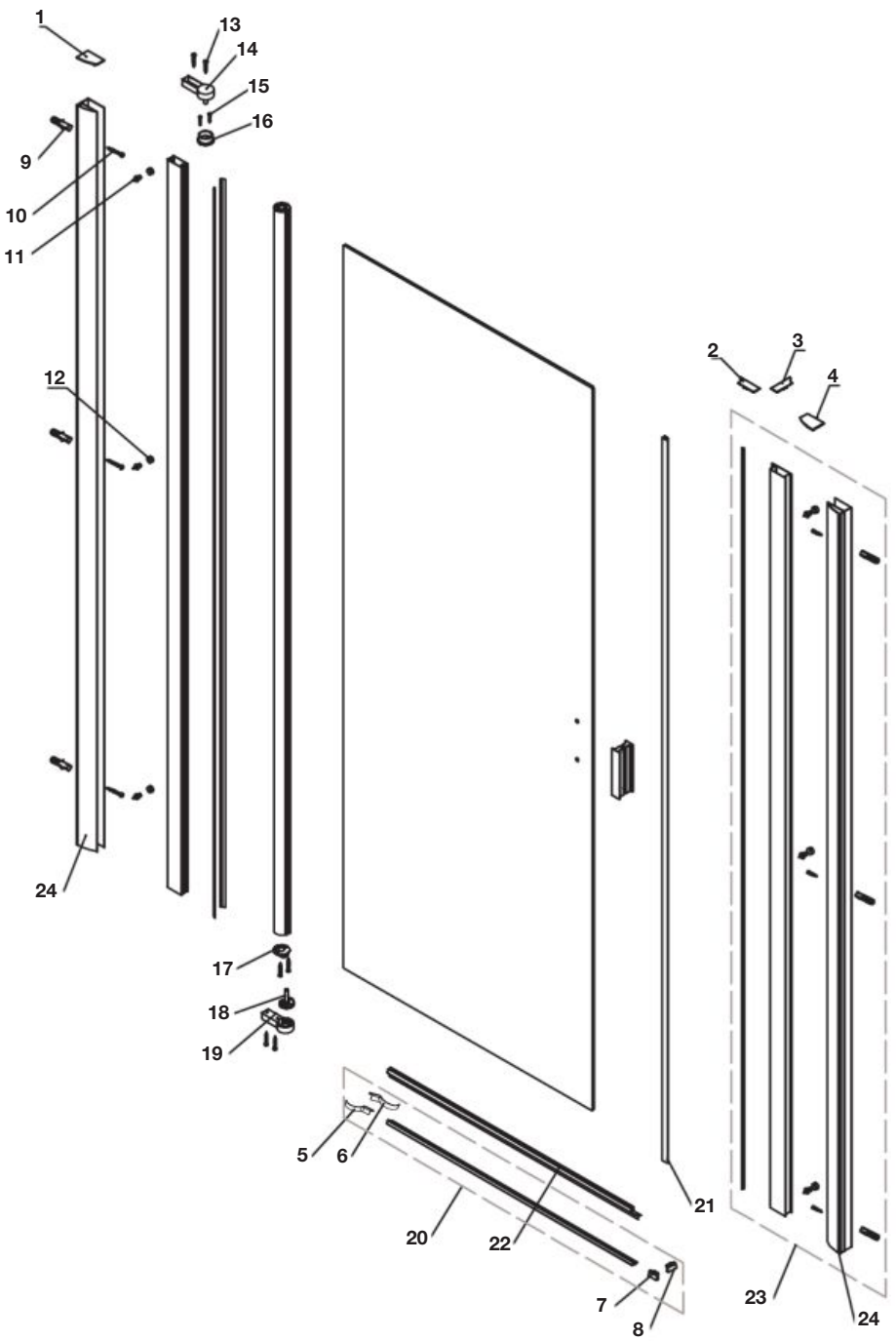

			€
1		**AM99320000**	2,09
2			
3			
4			
5			
6			
7			
8			
9	6 un	**AM99296002**	7,73
10	6 un		
11	6 un		
12	6 un		

				€
13	4 un	**AM99321302**		6,21
14				
15	4 un			
16				
17				
18				
19				
20		**AM99319702**	800	5,14
		AM99319802	900	5,14
		AM99319902	1000	5,14
21		**AM99321400**		5,86

			€
22	**AM99344800**	800	7,23
	AM99344900	900	7,41
	AM99345000	1000	7,57
23	**AM99319602**		39,00
24	**AM99323502**		19,60

Victoria Plus

Victoria Plus L2-E

AM12B3E87D001.NMN	1000
AM12B44C7D001.NMN	1100
AM12B4B07D001.NMN	1200
AM12B5147D001.NMN	1300
AM12B5787D001.NMN	1400
AM12B5DC7D001.NMN	1500
AM12B6407D001.NMN	1600
AM12B6A47D001.NMN	1700
AM12B7087D001.NMN	1800

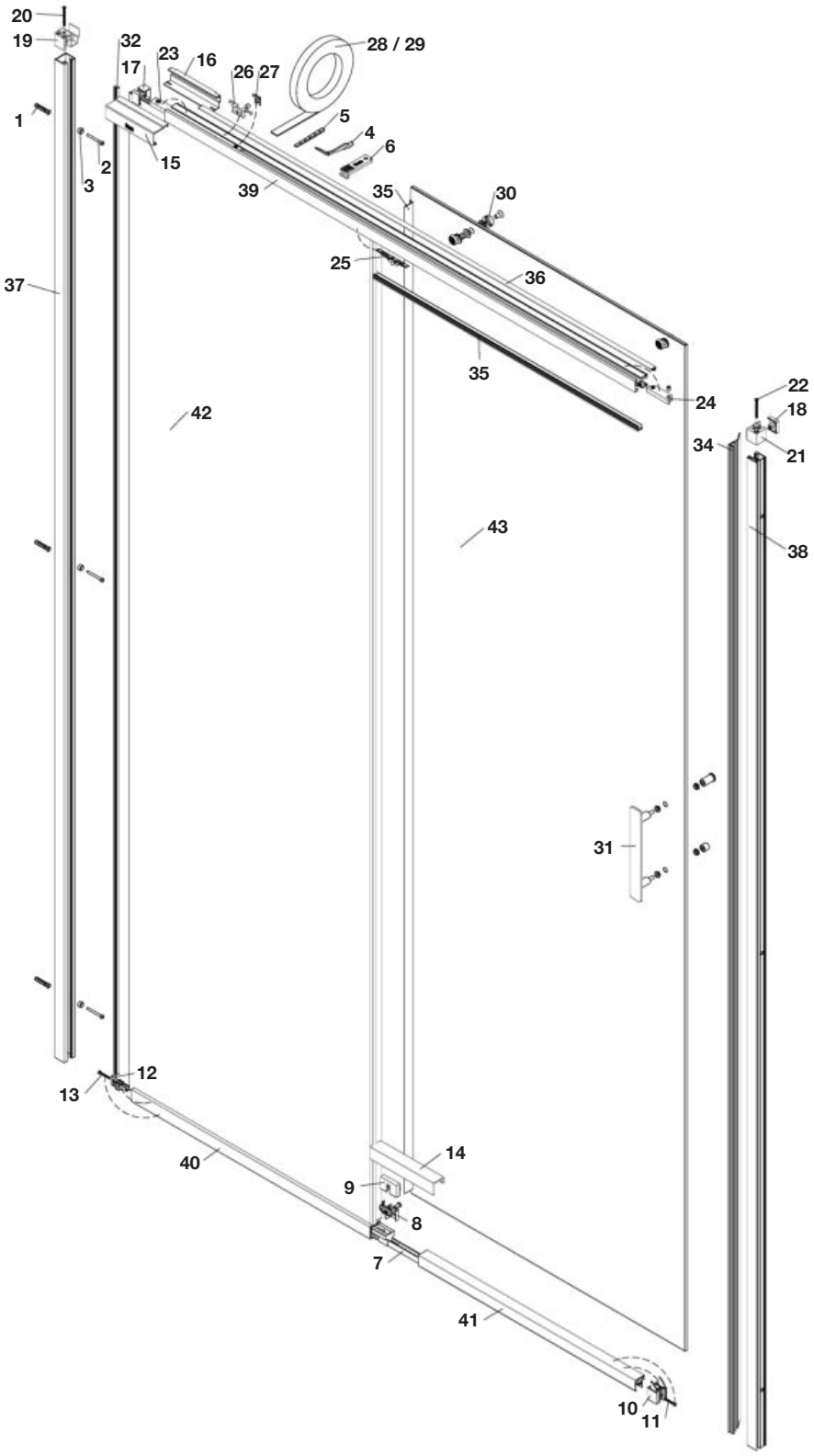

Victoria Plus L2-E

Sustituir (Y) de la referencia de producto por el código de color elegido:
2 Plata brillo
6 Negro mate

Sólo se muestra el precio del acabado plata /
Only the price of the silver finish is shown

			€
1	3 un		
2	3 un	**AM99412000**	8,04
3	3 un		
4	1 un	**AM99412100**	4,83
5	2 un	**AM99412200**	4,47
6	1 un	**AM99412300**	4,44
7	1 un	**AM99412403**	4,67
8	1 un	**AM99412503**	5,30
9	1 un		
10	1 un	**AM9941260Y**	5,43
11	1 un		
12	2 un	**AM99412703**	5,50
13	2 un		
14	1 un	**AM9941320Y**	5,93
15	1 un		
16	1 un	**AM9941330Y**	6,31
17	1 un		
18	1 un	**AM9941360Y**	4,80
19	1 un	**AM9941370Y**	6,67
20	1 un		
21	1 un	**AM9941380Y**	7,14
22	1 un		
23	1 un	**AM99413903**	10,20
24	1 un	**AM99414003**	16,70
25	1 un	**AM99414103**	4,40
26	1 un	**AM99414206**	16,10
27	2 un		
28	2 un	**AM99341500**	33,70
29	1 un	**AM99414300**	69,00

			€
30	1 un	**AM9941440Y**	20,70
31	2 un	**AM9941450Y**	18,10
32	1 un	**AM99414806**	11,60
33	1 un	**AM99414900**	11,10
34	2 un	**AM99415000**	10,90
35	1 un	**AM99415200**	9,47
36	1 un	**AM99415300**	11,10
37	1 un	**AM9941570Y**	27,10
38	1 un	**AM9941580Y**	29,00
39	1 un	**AM9941700Y**	40,60
		AM9941710Y	41,40
		AM9941720Y	41,40
		AM9941730Y	41,40
		AM9941740Y	41,40
		AM9941750Y	42,60
		AM9941760Y	41,40
		AM9941770Y	42,10
		AM9941780Y	42,10
40	1 un	**AM9942670Y**	26,60
		AM9942680Y	26,60
		AM9942690Y	30,00
		AM9942700Y	30,00
		AM9942710Y	30,00
		AM9942720Y	30,00
		AM9942730Y	27,70
		AM9942740Y	30,00
		AM9942750Y	30,00

			€
41	1 un	**AM9942940Y**	24,10
		AM9942950Y	24,10
		AM9942960Y	11,90
		AM9942970Y	24,10
		AM9942980Y	24,10
		AM9942990Y	24,10
		AM9943000Y	24,10
		AM9943010Y	24,10
		AM9943020Y	24,10
42	1 un	**AM994196M0**	92,00
		AM994197M0	101,00
		AM994198M0	106,00
		AM994199M0	110,00
		AM994200M0	119,00
		AM994201M0	124,00
		AM994202M0	130,00
		AM994203M0	159,00
		AM994204M0	166,00
43	1 un	**AM994205M0**	92,10
		AM994206M0	91,60
		AM994207M0	111,00
		AM994208M0	112,00
		AM994209M0	119,00
		AM994210M0	122,00
		AM994211M0	130,00
		AM994212M0	134,00
		AM994213M0	138,00

Victoria Plus

Victoria Plus LF-C

AM12C2BC7D001.NMN	700
AM12C2EE7D001.NMN	750
AM12C3207D001.NMN	800
AM12C3847D001.NMN	900

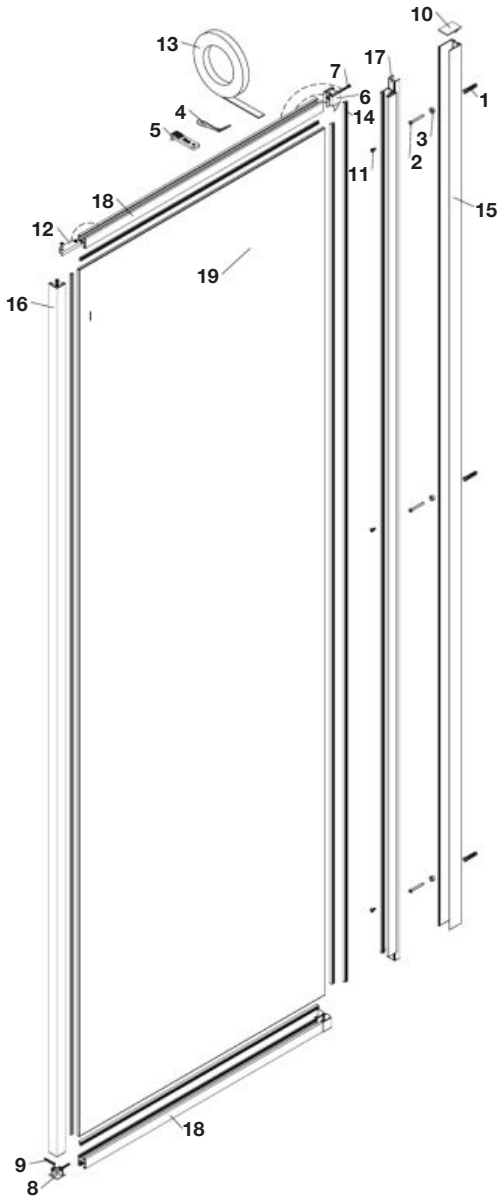

Sustituir (Y) de la referencia de producto por el código de color elegido:
2 Plata brillo
6 Negro mate

Sólo se muestra el precio del acabado plata /
Only the price of the silver finish is shown

			€
1	3 un		
2	3 un	**AM99412000**	8,04
3	3 un		
4	1 un	**AM99412100**	4,83
5	1 un	**AM99412300**	4,44
6	1 un	**AM9941260Y**	5,43
7	1 un		
8	1 un	**AM99412803**	5,01
9	2 un		

			€
10	1 un	**AM99413500**	4,90
11	1 un	**AM99348000**	7,94
12	1 un	**AM99414003**	16,70
13	1 un	**AM99414300**	69,00
14	1 un	**AM99414806**	11,60
15	1 un	**AM9941590Y**	30,00
16	1 un	**AM9941600Y**	23,90
17	1 un	**AM9941610Y**	16,60

			€
18	1 un	**AM9941850Y**	14,60
	1 un	**AM9941860Y**	14,60
	1 un	**AM9941870Y**	14,60
	1 un	**AM9941880Y**	14,60
19	1 un	**AM994246M0**	209,00
	1 un	**AM994247M0**	154,00
	1 un	**AM994248M0**	151,00
	1 un	**AM994249M0**	169,00

Victoria Plus

Victoria Plus L4-E

AM12D6407D001.NMN	1600
AM12D6A47D001.NMN	1700
AM12D7087D001.NMN	1800
AM12D76C7D001.NMN	1900
AM12D7D07D001.NMN	2000

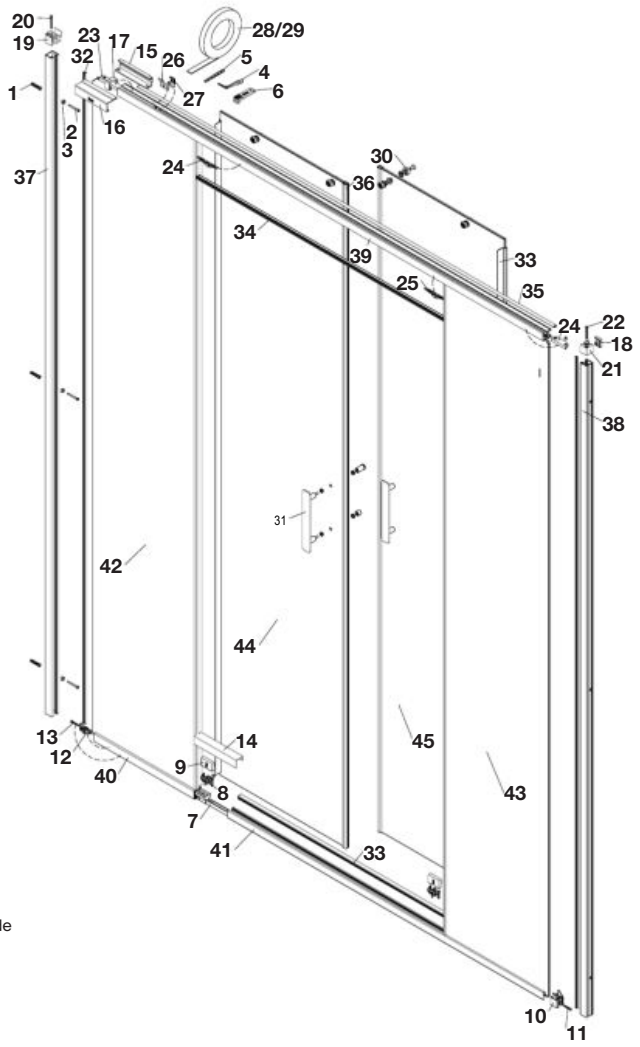

Sustituir (Y) de la referencia de producto por el código de color elegido:
2 Plata brillo
6 Negro mate

Sólo se muestra el precio del acabado plata /
Only the price of the silver finish is shown

			€
1	3 un		
2	3 un	**AM99412000**	8,04
3	3 un		
4	1 un	**AM99412100**	4,83
5	2 un	**AM99412200**	4,47
6	1 un	**AM99412300**	4,44
7	1 un	**AM99412403**	4,67
8	1 un	**AM99412503**	5,30
9	1 un		
10	1 un	**AM9941260Y**	5,43
11	1 un		
12	2 un	**AM99412703**	5,50
13	2 un		
14	1 un	**AM9941320Y**	5,93
15	1 un		
16	1 un	**AM9941330Y**	6,31
17	1 un		
18	1 un	**AM9941360Y**	4,80
19	1 un	**AM9941370Y**	6,67
20	1 un		
21	1 un	**AM9941380Y**	7,14
22	1 un		
23	1 un	**AM99413903**	10,20
24	1 un	**AM99414003**	16,70

			€
25	1 un	**AM99414103**	4,40
26	2 un	**AM99414206**	16,10
27	2 un		
28	1 un	**AM99341500**	33,70
29	1 un	**AM99414300**	69,00
30	2 un	**AM9941440Y**	20,70
31	1 un	**AM9941450Y**	18,10
32	1 un	**AM99414806**	11,60
33	2 un	**AM99414900**	11,10
34	1 un	**AM99415200**	9,47
35	2 un	**AM99404900**	76,70
36	1 un	**AM99415400**	12,90
37	1 un	**AM9941570Y**	27,10
38	1 un	**AM9941580Y**	29,00
39	1 un	**AM9941790Y**	44,70
		AM9941800Y	45,40
		AM9941810Y	45,40
		AM9941820Y	45,40
		AM9941830Y	45,40
40	1 un	**AM9942760Y**	30,00
		AM9942770Y	30,00
		AM9942780Y	30,00
		AM9942790Y	30,00
		AM9942800Y	30,00

			€
41	1 un	**AM9942810Y**	26,40
		AM9942820Y	26,40
		AM9942830Y	26,40
		AM9942840Y	26,40
		AM9942850Y	26,40
42	1 un	**AM994230M0**	91,60
		AM994232M0	94,70
		AM994234M0	103,00
		AM994236M0	115,00
		AM994238M0	123,00
43	1 un	**AM994231M0**	91,60
		AM994233M0	94,70
		AM994235M0	103,00
		AM994237M0	115,00
		AM994239M0	126,00
44	1 un	**AM994240M0**	106,00
		AM994242M0	105,00
		AM994244M0	109,00
45	1 un	**AM994241M0**	106,00
		AM994243M0	105,00
		AM994245M0	109,00

Victoria Plus

Victoria Plus MR

AM12E2EE7D001.NMN	750 (R375)
AM12E3207D001.NMN	800 (R500)
AM12F3207D001.NMN	800 (R550)
AM12E3847D001.NMN	900 (R500)
AM12F3847D001.NMN	900 (R550)
AM12E3E87D001.NMN	1000 (R500)

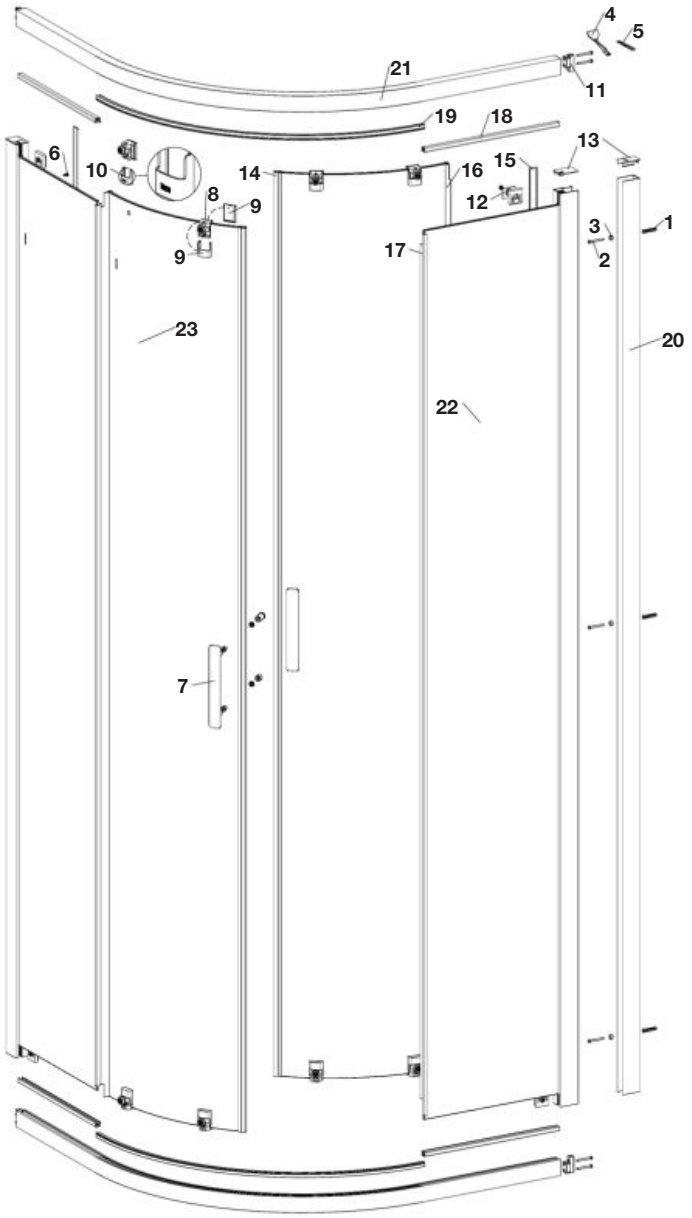

Sustituir (Y) de la referencia de producto por el código de color elegido:
2 Plata brillo
6 Negro mate

Sólo se muestra el precio del acabado plata /
Only the price of the silver finish is shown

			€
1	3 un		
2	3 un	**AM99412000**	8,04
3	3 un		
4	1 un	**AM99412100**	4,83
5	2 un	**AM99412200**	4,47
6	1 un	**AM99348000**	7,94
7	1 un	**AM9941450Y**	18,10
8	4 un	**AM9936010Y**	40,40
9	4 un	**AM9936020Y**	8,20
	4 un		
10	4 un	**AM9941470Y**	10,00
11	1 un		
	1 un	**AM99347903**	7,70
	4 un		

			€
	4 un		
12	4 un	**AM99348303**	6,33
	4 un		
	1 un		
13	1 un	**AM99348800**	8,93
	2 un		
14	1 un	**AM99415400**	12,90
15	2 un	**AM99383300**	2,87
16	2 un	**AM99415500**	11,60
17	2 un	**AM99415600**	12,10
18	1 un	**AM99353300**	12,90
19	1 un	**AM9935410Y**	9,44
20	1 un	**AM9941899Y**	18,40

			€
	2 un	**AM9941900Y**	96,00
	2 un	**AM9941910Y**	96,90
21	2 un	**AM9941920Y**	100,00
	2 un	**AM9941930Y**	103,00
	2 un	**AM9941940Y**	96,10
	2 un	**AM9941950Y**	99,90
	1 un	**AM994250MY**	119,00
	1 un	**AM994251MY**	113,00
	1 un	**AM994252MY**	128,00
22	1 un	**AM994253MY**	144,00
	1 un	**AM994254MY**	104,00
	1 un	**AM994255MY**	119,00
	1 un	**AM994256M0**	304,00
23	1 un	**AM994257M0**	144,00
	1 un	**AM994258M0**	310,00

Victoria Plus

Victoria Plus 2L2

AM12A2BC7D001.NMN	700
AM12A2EE7D001.NMN	750
AM12A3207D001.NMN	800
AM12A3527D001.NMN	850
AM12A3847D001.NMN	900
AM12A3E87D001.NMN	1000
AM12A44C7D001.NMN	1100
AM12A4B07D001.NMN	1200

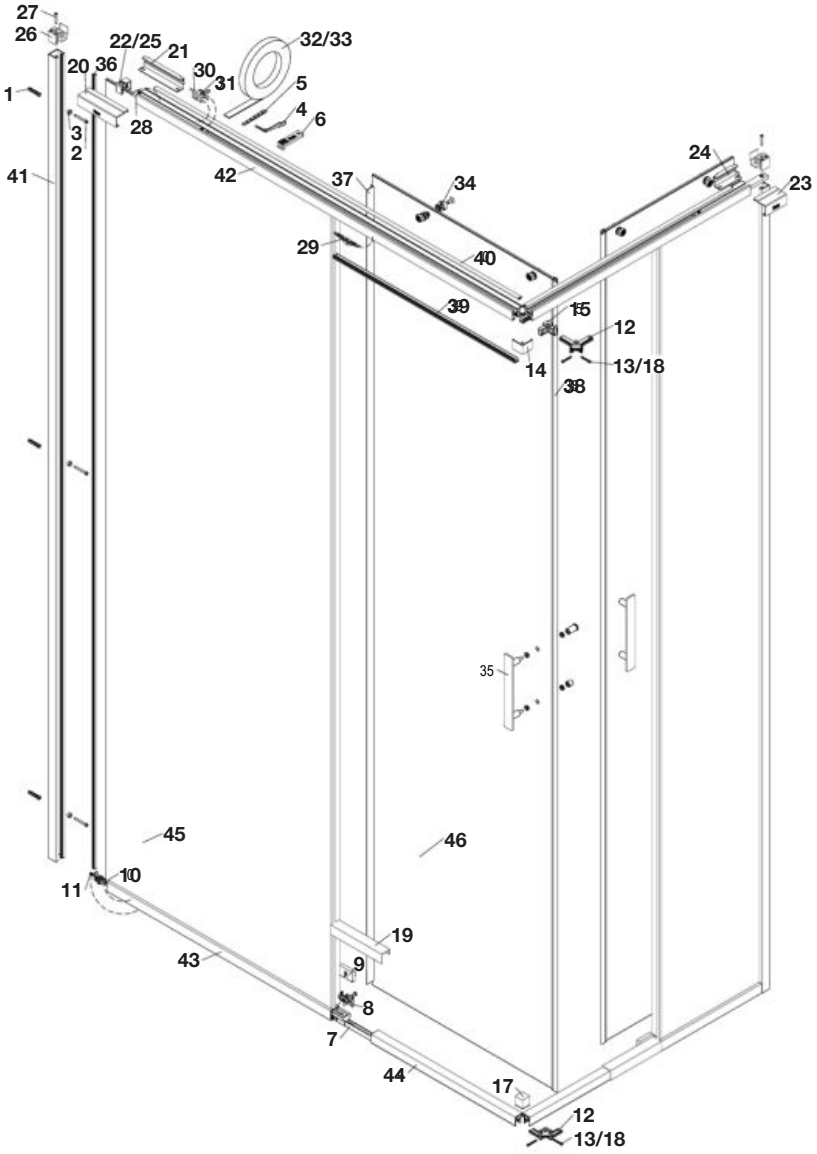

Victoria Plus

Victoria Plus 2L2

Sustituir (Y) de la referencia de producto por el código de color elegido:
2 Plata brillo
6 Negro mate

Sólo se muestra el precio del acabado plata /
Only the price of the silver finish is shown

			€
1	3 un	**AM99412000**	8,04
2	3 un		
3	3 un		
4	1 un	**AM99412100**	4,83
5	2 un	**AM99412200**	4,47
6	1 un	**AM99412300**	4,44
7	1 un	**AM99412403**	4,67
8	1 un	**AM99412503**	5,30
9	1 un		
10	2 un	**AM99412703**	5,50
11	2 un		
12	1 un	**AM99412906**	6,84
13	2 un		
14	1 un	**AM9941300Y**	6,16
15	1 un		
16	2 un		
17	1 un	**AM9941310Y**	5,40
18	2 un		
19	1 un	**AM9941320Y**	5,93
20	1 un	**AM9941330Y**	6,31
21	1 un		
22	1 un		
23	1 un	**AM9941340Y**	11,80
24	1 un		
25	1 un		
26	1 un	**AM9941370Y**	6,67
27	1 un		
28	1 un	**AM99413903**	10,20
29	1 un	**AM99414103**	4,40

			€
30	2 un	**AM99414206**	16,10
31	2 un		
32	1 un	**AM99341500**	33,70
33	1 un	**AM99414300**	69,00
34	2 un	**AM9941440Y**	20,70
35	1 un	**AM9941450Y**	18,10
36	1 un	**AM99414806**	11,60
37	2 un	**AM99414900**	11,10
38	1 un	**AM99415100**	12,40
39	1 un	**AM99415200**	9,47
40	2 un	**AM99404900**	76,70
41	1 un	**AM9941570Y**	27,10
42	1 un	**AM9941620Y**	34,10
		AM9941630Y	34,10
		AM9941640Y	34,10
		AM9941650Y	34,10
		AM9941660Y	34,10
		AM9941670Y	34,10
		AM9941680Y	34,10
		AM9941690Y	35,10
43	1 un	**AM9942590Y**	26,60
		AM9942600Y	26,60
		AM9942610Y	26,60
		AM9942620Y	26,60
		AM9942630Y	26,60
		AM9942640Y	30,00
		AM9942650Y	27,10
		AM9942660Y	23,60

			€
44	1 un	**AM9942860Y**	24,10
		AM9942870Y	24,10
		AM9942880Y	24,10
		AM9942890Y	24,10
		AM9942900Y	24,10
		AM9942910Y	24,10
45	1 un	**AM994214M0**	78,40
		AM994215M0	81,10
		AM994216M0	102,00
		AM994217M0	85,90
		AM994218M0	90,70
		AM994219M0	95,40
		AM994220M0	105,00
		AM994221M0	117,00
46	1 un	**AM994222M0**	75,00
		AM994223M0	77,90
		AM994224M0	80,30
		AM994225M0	83,30
		AM994226M0	105,00
		AM994227M0	91,00
		AM994228M0	120,00

Victoria-N

Victoria DF / BF

DF	
AM18508012	800
AM18509012	900
AM18510012	1000

BF	
AM19308012	800

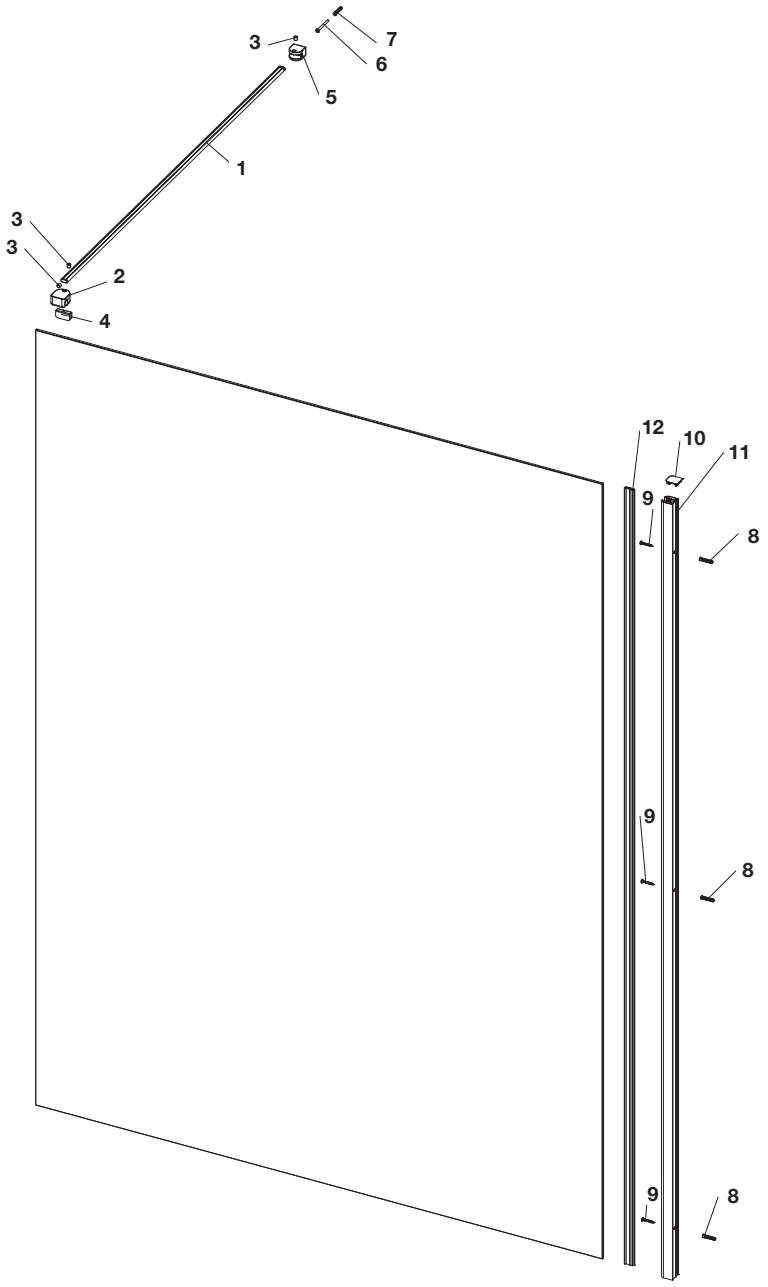

			€
1		**AM99347002**	19,30
2			
3	3 un		
4		**AM99347202**	23,40
5			
6			
7			

			€
8			
9	3 un	**AM99327000**	6,19
10		**AM99347400**	6,33
11		**AM99349902**	39,40
		AM99350002	29,90
12		**AM99353103**	15,90

Victoria-N

Victoria L2-E

AM18610012	1000
AM18611012	1100
AM18612012	1200
AM18613012	1300
AM18614012	1400
AM18615012	1500
AM18616012	1600

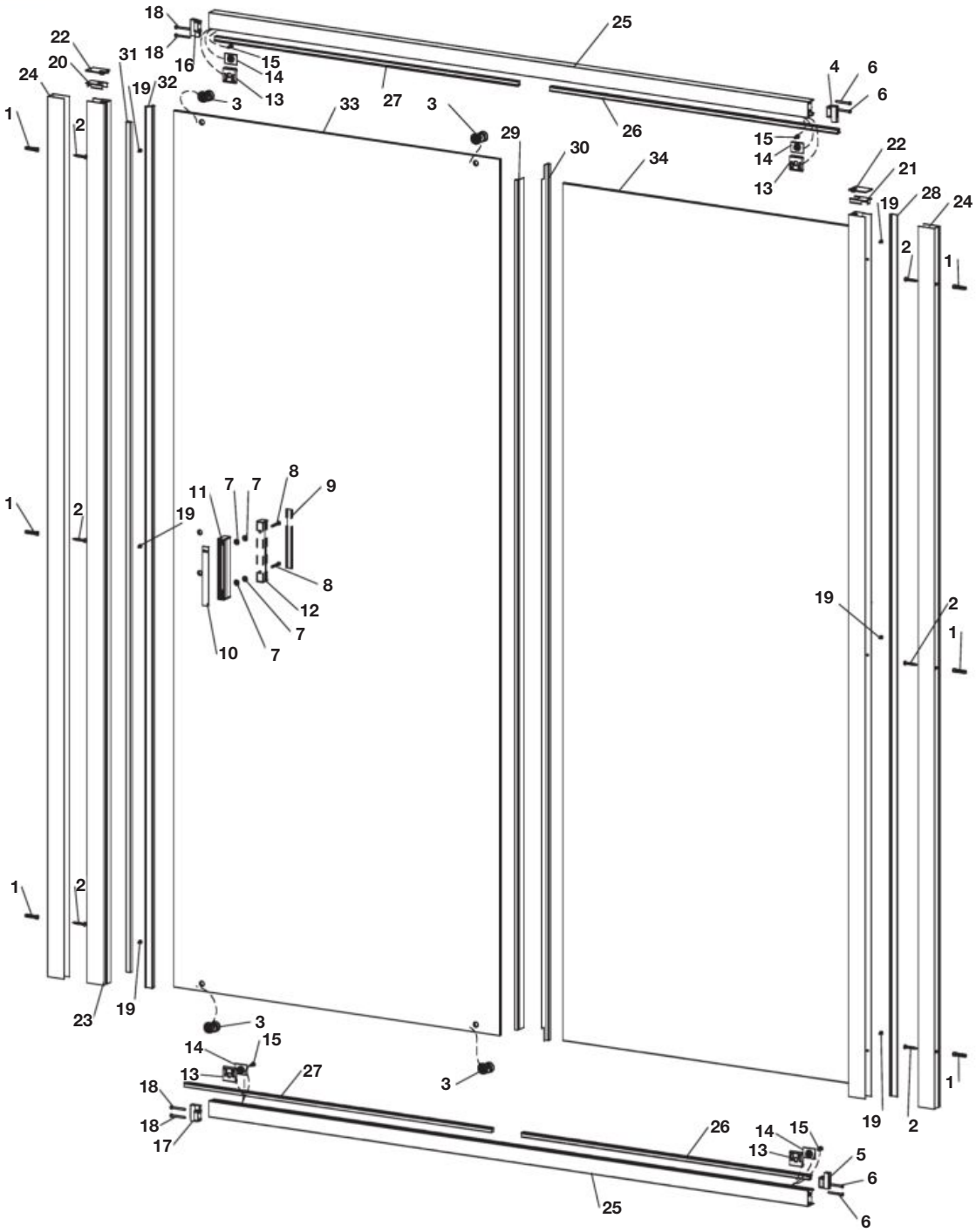

Victoria-N

Victoria L2-E

				€
1	3 un	**AM99347300**		9,03
2	3 un			
3	4 un	**AM99347703**		21,60
4		**AM99347903**		7,70
5				
6	4 un			
7	4 un	**AM99348102**		23,40
8	2 un			
9				
10				
11				
12				
13	4 un	**AM99348303**		6,33
14	4 un			
15	4 un			
16		**AM99348603**		7,70
17				
18	4 un			

				€
19	6 un	**AM99348700**		9,24
20		**AM99348800**		8,93
21				
22	2 un			
23		**AM99350302**		37,30
24	2 un	**AM99350402**		62,00
25		**AM99352002**	1000	39,40
		AM99352102	1100	40,30
		AM99352202	1200	44,00
		AM99352302	1300	47,30
		AM99352402	1400	49,30
		AM99352502	1500	51,40
		AM99352602	1600	53,30
26		**AM99353300**		12,90
27		**AM99353403**		12,80
28		**AM99353703**		13,30
29	2 un	**AM99353800**		16,00
30	2 un			

				€
31		**AM99354203**		13,80
32		**AM99354300**		13,60
33		**AM99357412**	1000	97,00
		AM99357512	1100	102,00
		AM99357612	1200	107,00
		AM99357712	1300	111,00
		AM99357812	1400	116,00
		AM99357912	1500	120,00
		AM99358012	1600	126,00
34		**AM99358112**	1000	105,00
		AM99358212	1100	110,00
		AM99358312	1200	115,00
		AM99358412	1300	120,00
		AM99358512	1400	125,00
		AM99358612	1500	129,00
		AM99358712	1600	134,00

Victoria-N

Victoria 2P

AM19208012	800
AM19209012	900

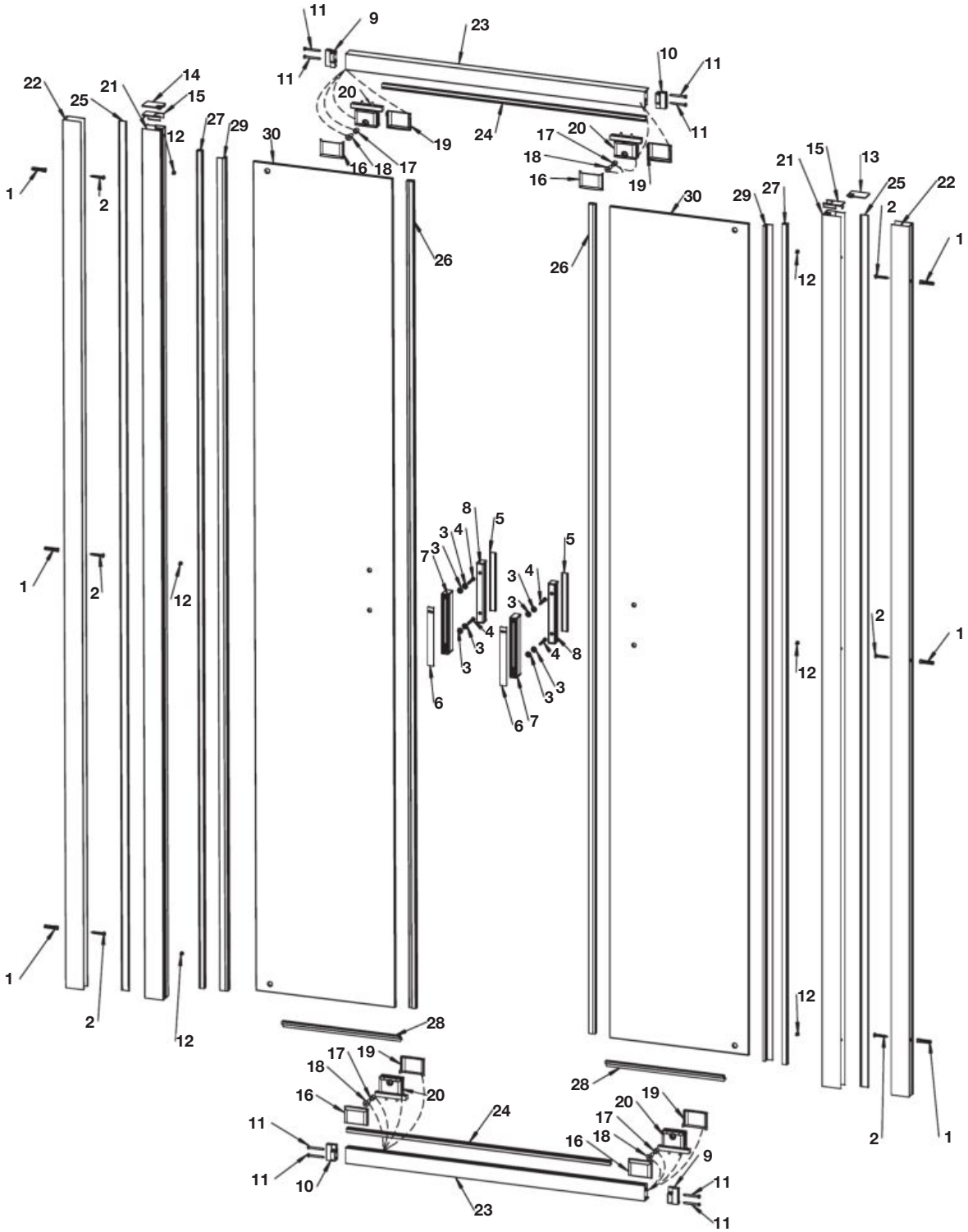

Victoria-N

Victoria 2P

				€
1	3 un	**AM99347300**		9,03
2	3 un			
3	4 un	**AM99348102**		23,40
4	2 un			
5				
6				
7				
8				
9		**AM99348603**		7,70
10				
11	4 un			
12	6 un	**AM99348700**		9,24
13		**AM99348800**		8,93
14				
15	2 un			

				€
16		**AM99349402**		9,24
17				
18				
19				
20		**AM99349602**		14,00
21		**AM99350302**		37,30
22		**AM99350402**		62,00
23	2 un	**AM99351202**	800	52,00
	2 un	**AM99351302**	900	54,30
24		**AM99353403**		12,80
25		**AM99353703**		13,30
26	2 un	**AM99354000**		17,10
27		**AM99354203**		13,80
28		**AM99354400**		13,40
29	2 un	**AM99354700**		14,20
30		**AM99355110**	800	63,60
		AM99355210	900	67,40

Victoria-N

Victoria LF

AM18707012	700
AM18707512	750
AM18708012	800
AM18709012	900

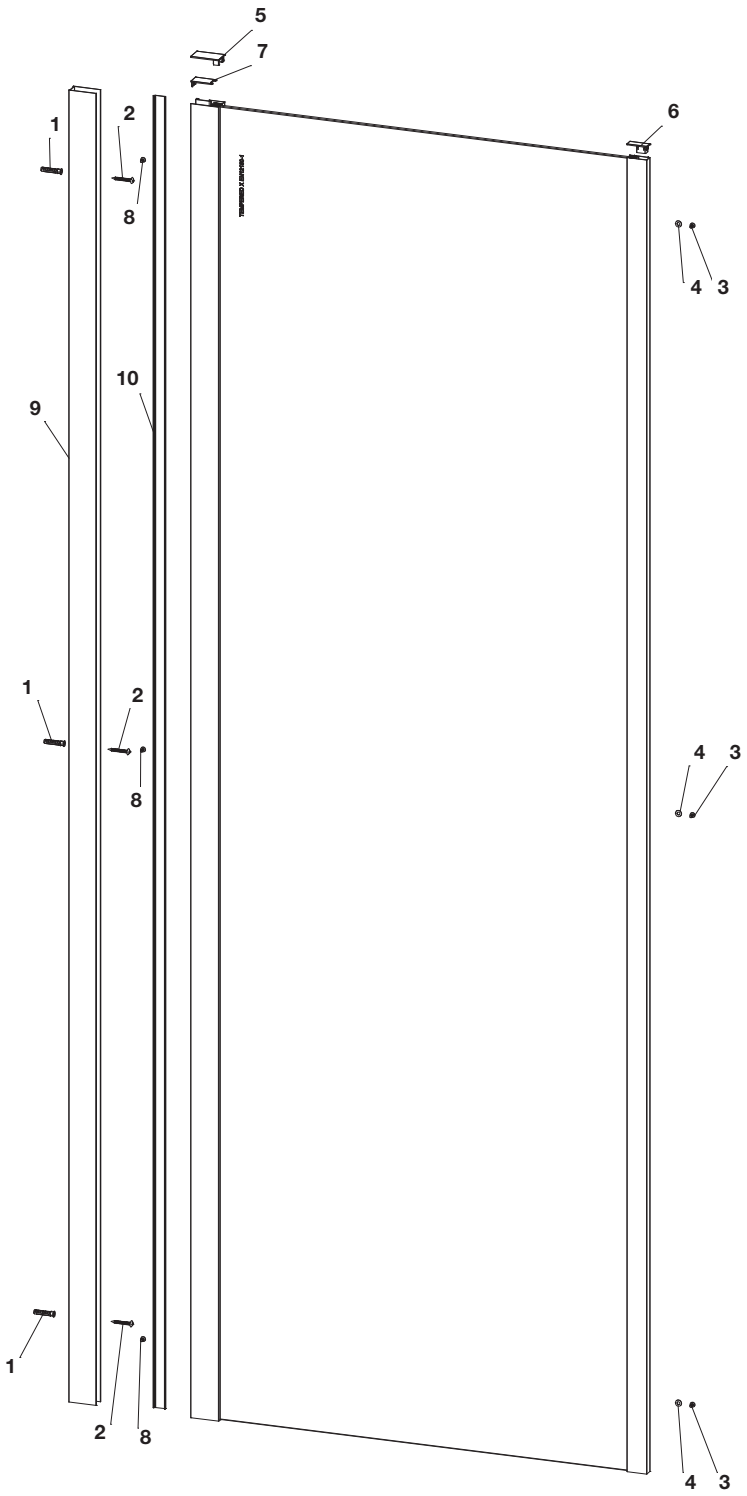

			€
1	3 un	**AM99342700**	-
2	3 un		
3	3 un	**AM99347500**	9,01
4	3 un		

			€
5			
6		**AM99347800**	8,93
7			
8	3 un	**AM99348000**	7,94
9		**AM99350502**	24,40
10		**AM99353603**	13,30

Sólo se muestra el precio del acabado plata /
Only the price of the silver finish is shown

Victoria-N

Victoria 2L2

AM18807012	700
AM18807512	750
AM18808012	800
AM18809012	900
AM18810012	1000
AM18812012	1200

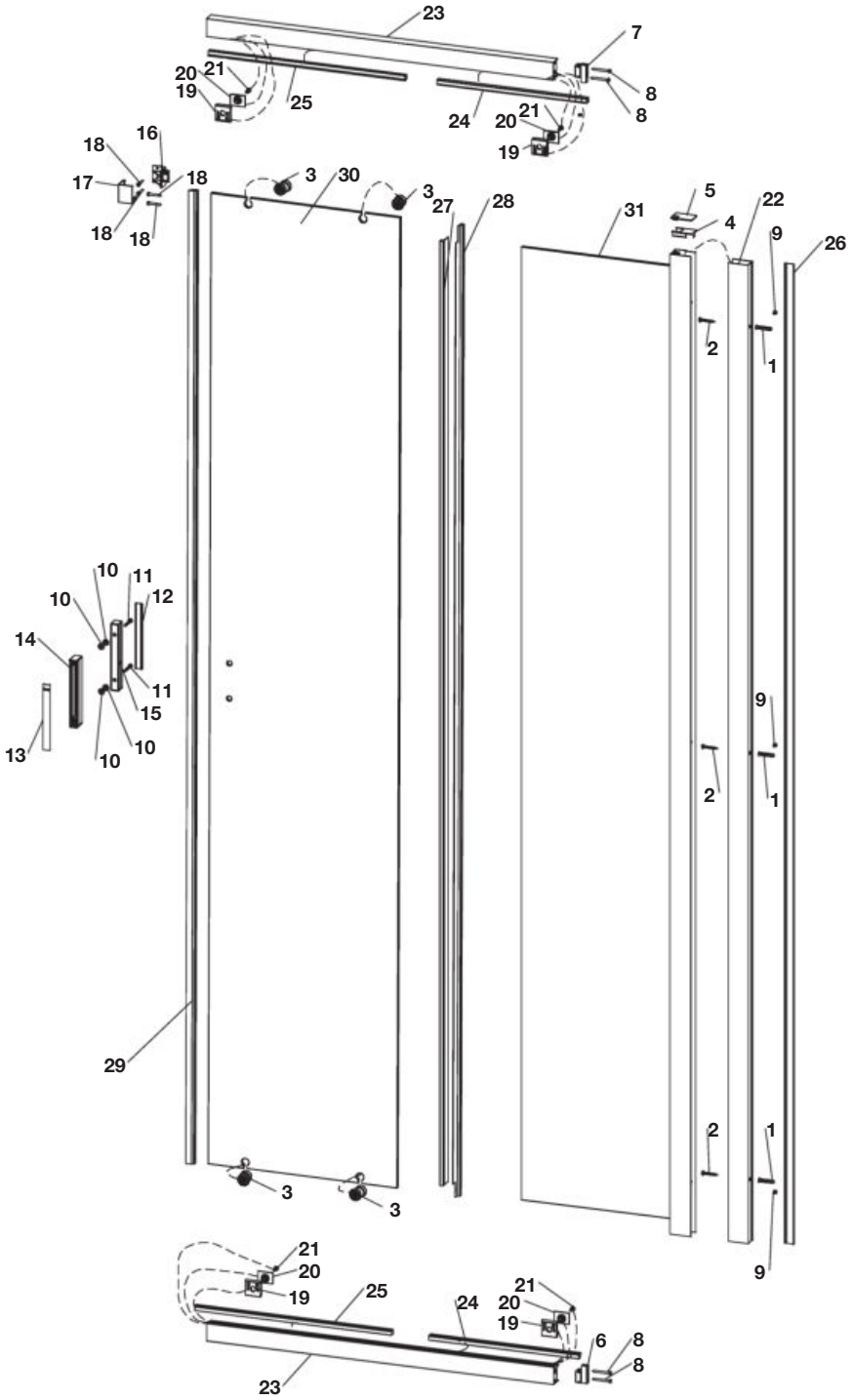

Victoria-N

Victoria 2L2

Sólo se muestra el precio del acabado plata /
Only the price of the silver finish is shown

				€
1	3 un	**AM99327000**		6,19
2	3 un			
3	4 un	**AM99347703**		21,60
4	2 un	**AM99348800**		8,93
5	2 un			
6		**AM99347903**		7,70
7				
8	4 un			
9	3 un	**AM99349000**		-
10	4 un	**AM99348102**		23,40
11	2 un			
12				
13				
14				
15				

				€
16		**AM99348202**		8,59
17				
18	4 un			
19	4 un	**AM99348303**		6,33
20	4 un			
21	4 un			
22		**AM99350402**		62,00
23	2 un	**AM99350602**	700	34,90
	2 un	**AM99350702**	750	34,70
	2 un	**AM99350802**	800	36,60
	2 un	**AM99350902**	900	39,00
	2 un	**AM99351002**	1000	40,70
	2 un	**AM99351102**	1200	45,10
24		**AM99353300**		12,90
25		**AM99353403**		12,80
26		**AM99353703**		13,30

				€
27	2 un	**AM99353800**		16,00
28	2 un			
29		**AM99353900**		16,60
30		**AM99355312**	700	81,30
		AM99355412	750	83,30
		AM99355512	800	85,10
		AM99355612	900	90,00
		AM99355712	1000	95,30
		AM99355812	1200	101,00
31		**AM99355912**	700	93,00
		AM99356012	750	95,10
		AM99356112	800	96,90
		AM99356212	900	101,00
		AM99356312	1000	105,00
		AM99356412	1200	115,00

Victoria-N

Victoria MR

AM18907512	750
AM18908012	800
AM19008012	800
AM18909012	900
AM19009012	900
AM18910012	1000

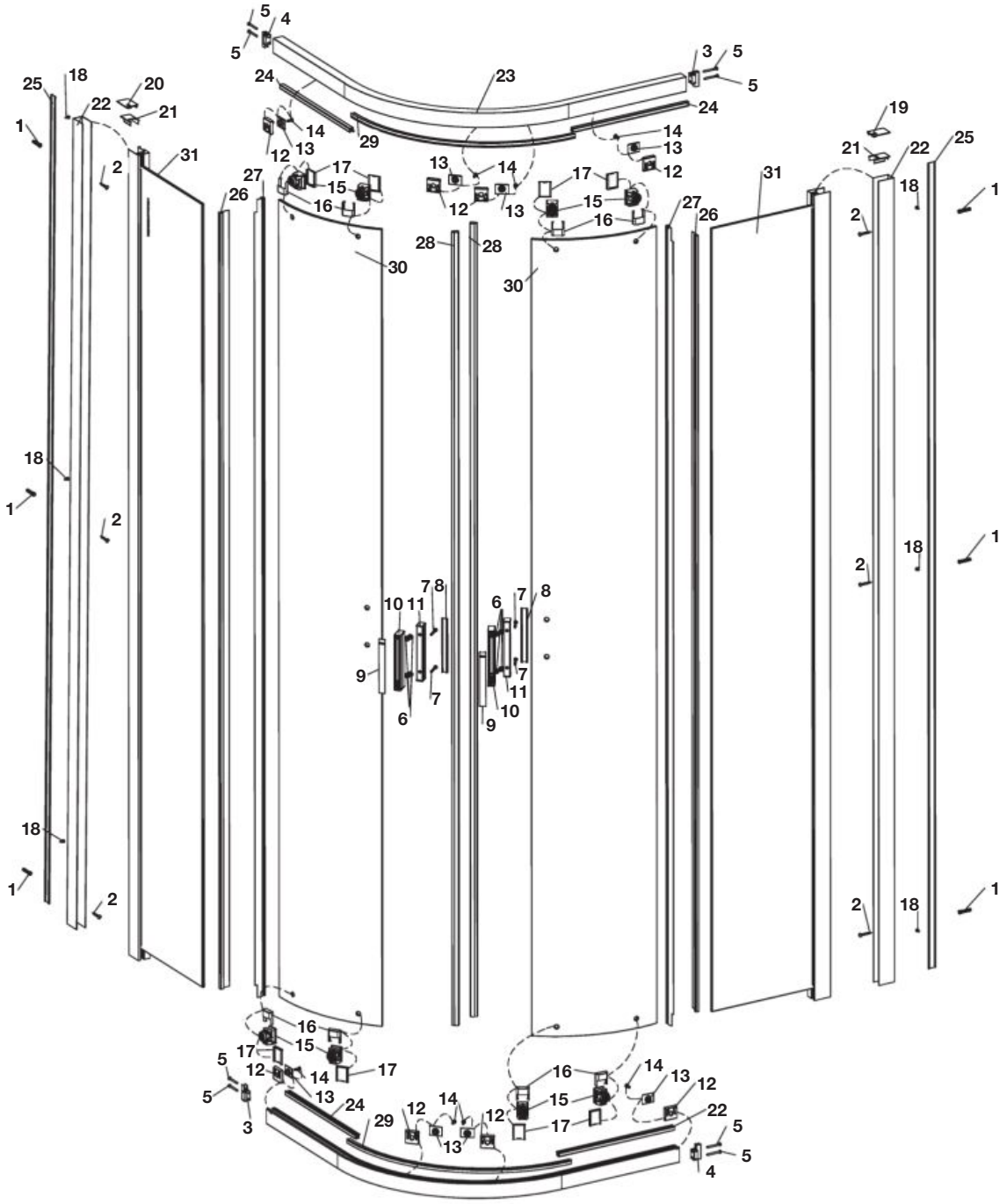

Victoria-N

Victoria MR

				€
1	3 un	**AM99327000**		6,19
2	3 un			
3		**AM99347903**		7,70
4				
5	4 un			
6	4 un	**AM99348102**		23,40
7	2 un			
8				
9				
10				
11				
12	4 un	**AM99348303**		6,33
13	4 un			
14	4 un			
15	4 un	**AM99348402**		37,10
16	4 un	**AM99348502**		12,80
17	4 un			
18	6 un	**AM99348700**		9,24
19		**AM99348800**		8,93
20				
21	2 un			
22	2 un	**AM99350402**		62,00
23	2 un	**AM99351402**	750	84,90
	2 un	**AM99351502**	800	82,40
	2 un	**AM99351602**	900	85,40
	2 un	**AM99351702**	1000	88,10
	2 un	**AM99351802**	800	88,10
	2 un	**AM99351902**	900	90,90
24		**AM99353300**		12,90
25	2 un	**AM99353703**		13,30
26	2 un	**AM99353800**		16,00
27	2 un			
28	2 un	**AM99354000**		17,10
29	2 un	**AM99354103**		12,80
30	2 un	**AM99356512**	750 R380	104,00
	2 un	**AM99356612**	800-900-1000 R500	110,00
	2 un	**AM99356712**	800-900 R550	113,00
31	2 un	**AM99356812**	750	94,00
	2 un	**AM99356912**	800	91,00
	2 un	**AM99357012**	900	98,70
	2 un	**AM99357112**	1000	107,00
	2 un	**AM99357212**	800	87,30
	2 un	**AM99357312**	900	95,10

Victoria-N

Victoria B1H

AM19408512 850

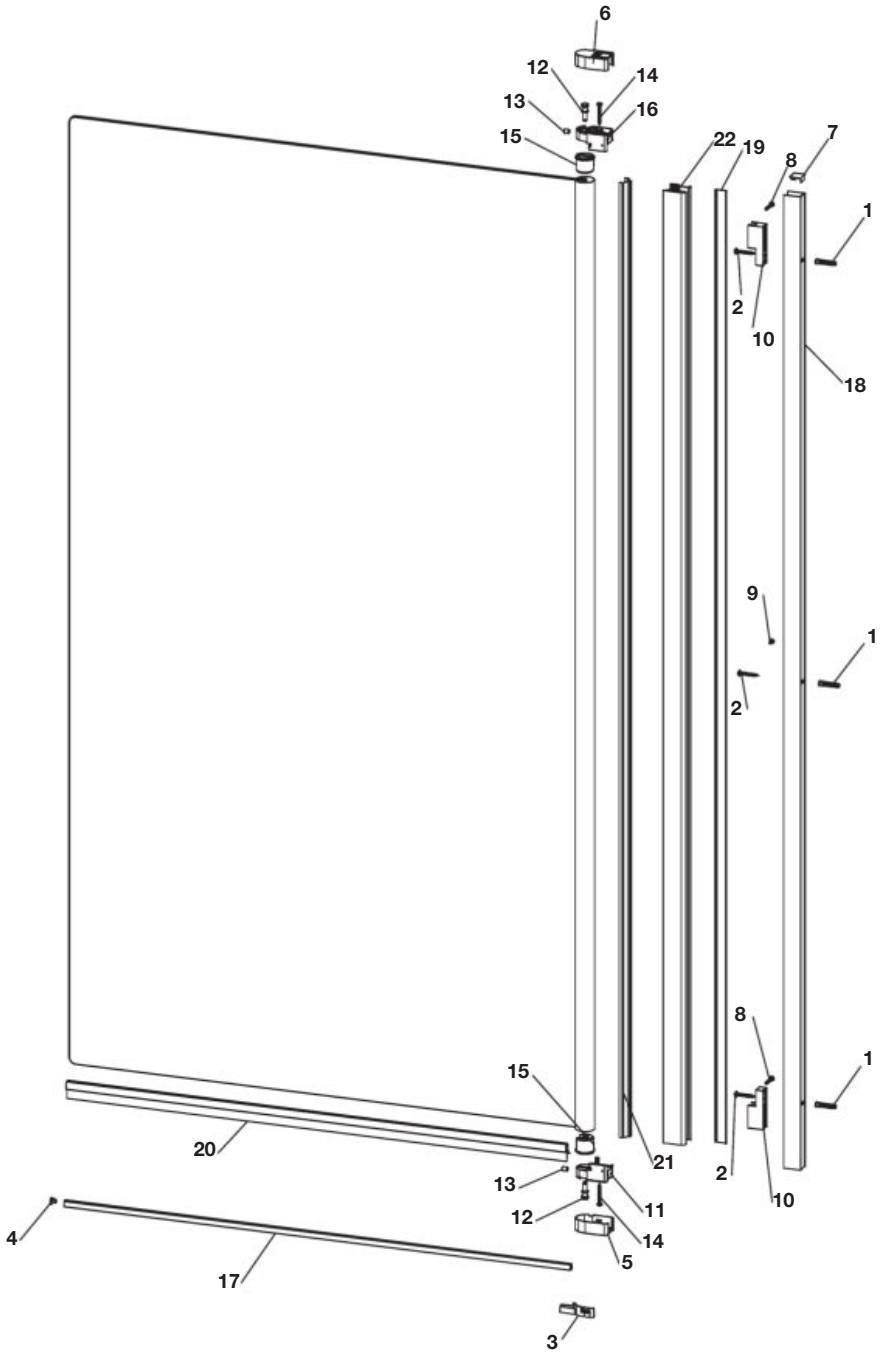

			€
1	3 un	**AM99327000**	6,19
2	3 un		
3		**AM99347603**	8,66
4			
5		**AM99349002**	12,60
6			
7			
8	2 un	**AM99349200**	8,89
9			
10	2 un		

			€
11		**AM99349703**	14,10
12	2 un		
13	2 un		
14	2 un		
15	2 un		
16			
17		**AM99350102**	10,90
18		**AM99350202**	16,40
19		**AM99353503**	13,60
20		**AM99354900**	16,00

		€
21	**AM99355000**	14,40
22	**AM99353002**	24,40

Victoria-N

Victoria B1HF

AM19510012 | 1000

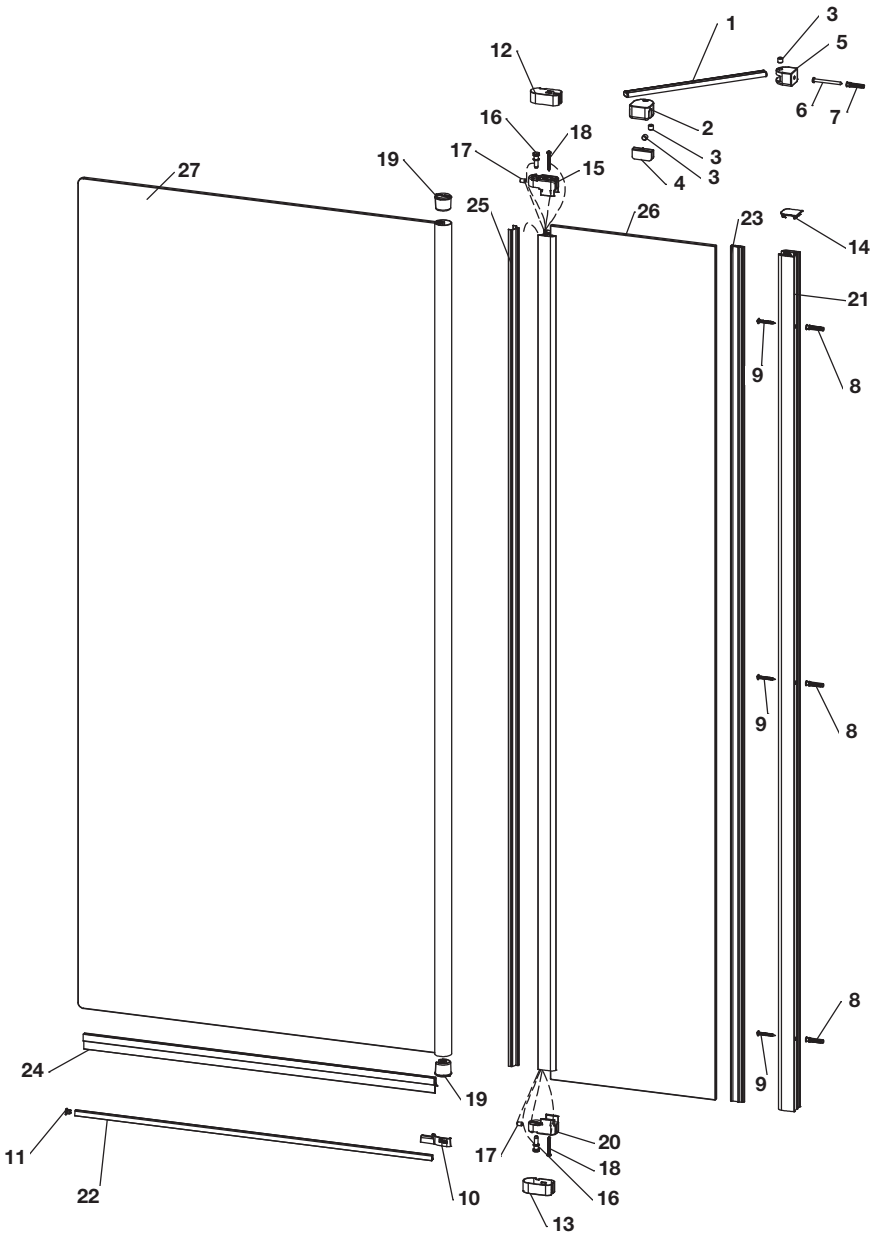

		€
1	**AM99347102**	12,60
2	**AM99347202**	23,40
3 3 un		
4		
5		
6		
7		
8 3 un	**AM99327000**	6,19
9 3 un		
10	**AM99347603**	8,66
11		

		€
12	**AM99349102**	12,10
13		
14		
15	**AM99349803**	14,10
16 2 un		
17 2 un		
18 2 un		
19 2 un		
20		
21	**AM99350002**	29,90
22	**AM99350102**	10,90

		€
23	**AM99353103**	15,90
24	**AM99354900**	16,00
25	**AM99355000**	14,40
26	**AM99358912**	76,60
27	**AM99358812**	104,00

Victoria

Victoria Walk-In DF

AM1973847D001.NMN	900
AM1973E87D001.NMN	1000
AM1974B07D001.NMN	1200

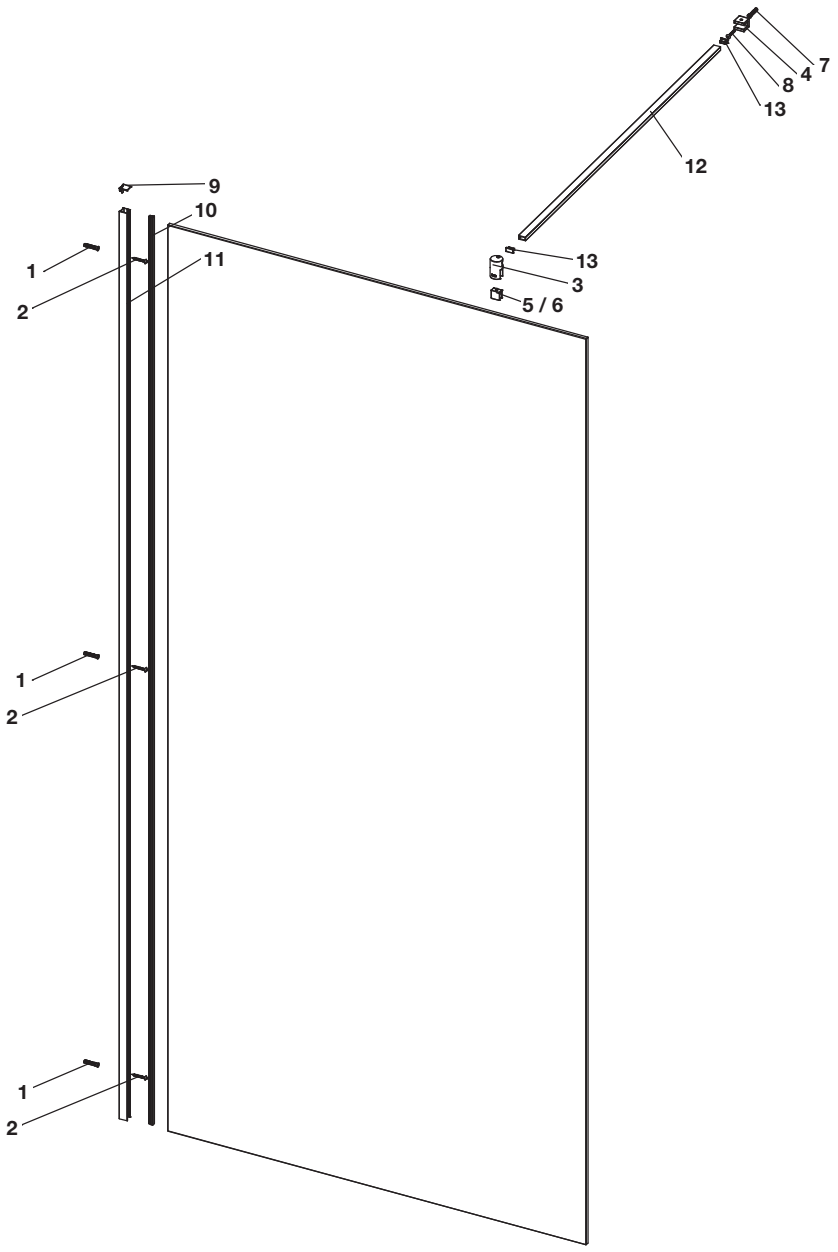

Sustituir (Y) de la referencia de producto por el código de color elegido:
2 Plata brillo
6 Negro mate

			€
1	4 un	**AM99262900**	10,30
2	4 un		
3		**AM9940650Y**	26,10
4			
5			
6			
7			
8			

			€
9		**AM99401500**	74,10
10		**AM99403800**	76,70
11		**AM9940500Y**	106,00
12		**AM9939360Y**	13,60
13	2 un		

Sólo se muestra el precio del acabado plata /
Only the price of the silver finish is shown

Victoria

Victoria Walk-In B1H

AM1983525DC012NMN	850

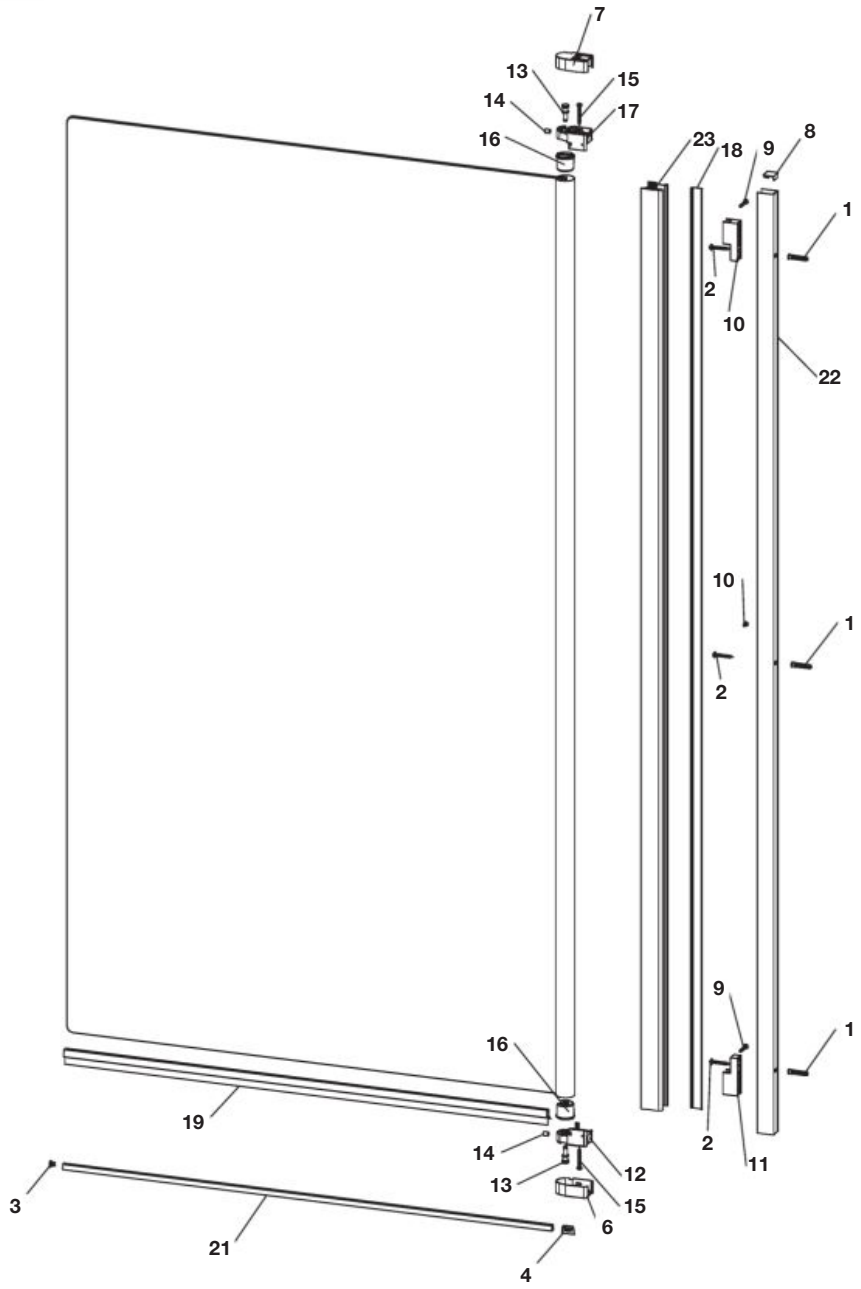

Sólo se muestra el precio del acabado plata /
Only the price of the silver finish is shown

Sustituir (Y) de la referencia de producto por el código de color elegido:
2 Plata brillo
6 Negro mate

			€
1	4 un	**AM99262900**	10,30
2	4 un		
3		**AM99406602**	17,00
4	2 un		
6		**AM99349002**	12,60
7			
8			

			€
9	2 un	**AM99349200**	8,89
10			
11	2 un		
12		**AM99349703**	14,10
13	2 un		
14	2 un		
15	2 un		
16			
17			

		€
18	**AM99353503**	13,60
19	**AM99354900**	16,00
21	**AM99350102**	10,90
22	**AM99350202**	16,40
23	**AM99353002**	24,40

Victoria

Victoria L2-E

AM1711001Y	1000
AM1711101Y	1100
AM1711201Y	1200
AM1711301Y	1300
AM1711401Y	1400
AM1711501Y	1500
AM1711601Y	1600

Acabados perfiles /
Frame finish
Sustituir la Y de la referencia por el código del acabado del perfil elegido:
In the product reference replace Y with the code for the selected finish code:
1 Blanco / White
2 Plata brillo / Glossy silver

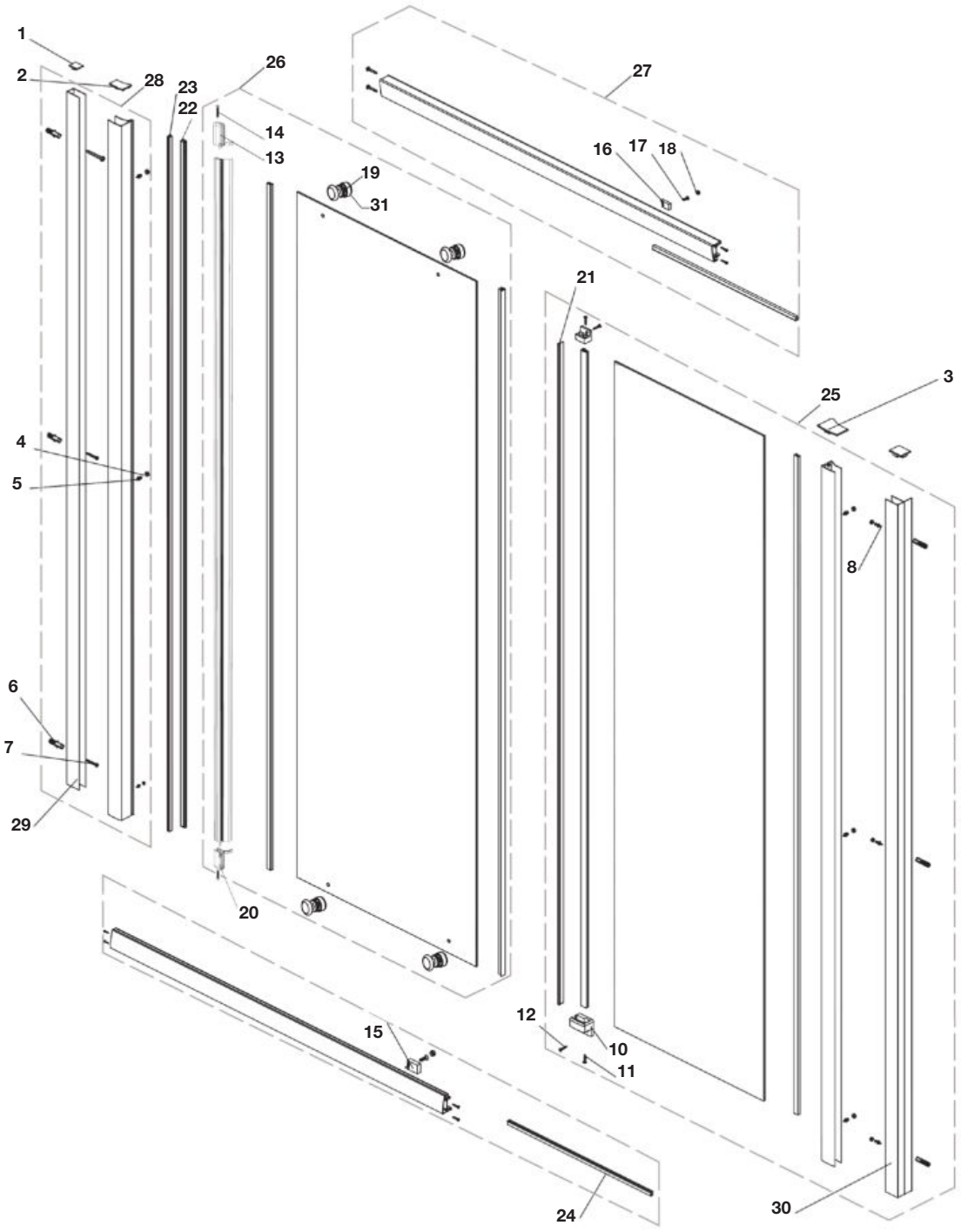

Victoria

Victoria L2-E

PB: Plata Brillo / Glossy silver
BL: Blanco / White

					€
1	2 un	**AM99248302**			5,39
2					
3					
4	9 un	**AM99248102**	PB		10,20
5	6 un				
6	6 un				
7	11 un				
8	3 un				
4	9 un	**AM99248101**	BL		7,21
5	6 un				
6	6 un				
7	11 un				
8	3 un				
9		**AM99247102**	PB		3,60
10					
11	2 un				
12	2 un				
9		**AM99247101**	BL		3,24
10					
11	2 un				
12	2 un				
13		**AM99342902**	PB		30,00
14	2 un				
15					
16					
17	2 un				
18	2 un				
19	4 un				
20					

					€
13		**AM99342901**	BL		N.D.
14	2 un				
15					
16					
17	2 un				
18	2 un				
19	4 un				
20					
21		**AM99249700**	1900 mm		2,54
22		**AM99249500**	1878 mm		11,60
23		**AM99248600**			10,50
24	2 un	**AM99250200**			6,13
25		**AM99307712**	PB 1000		N.D.
		AM99307812	PB 1100		186,00
		AM99307912	PB 1200		190,00
		AM99308012	PB 1300		194,00
		AM99308112	PB 1400		199,00
		AM99308212	PB 1500		N.D.
		AM99308312	PB 1600		211,00
		AM99307711	BL 1000		N.D.
		AM99307811	BL 1100		N.D.
		AM99307911	BL 1200		N.D.
		AM99308011	BL 1300		N.D.
		AM99308111	BL 1400		N.D.
		AM99308211	BL 1500		N.D.
		AM99308311	BL 1600		N.D.
26		**AM99342212**	PB 1000		N.D.
		AM99342312	PB 1100		73,70
		AM99342412	PB 1200		N.D.
		AM99342512	PB 1300		N.D.
		AM99342612	PB 1400		79,10
		AM99342712	PB 1500		80,70
		AM99342812	PB 1600		82,60

					€
26		**AM99342211**	BL 1000		N.D.
		AM99342311	BL 1100		N.D.
		AM99342411	BL 1200		N.D.
		AM99342511	BL 1300		N.D.
		AM99342611	BL 1400		N.D.
		AM99342711	BL 1500		N.D.
		AM99342811	BL 1600		N.D.
27		**AM99309102**	PB 1000		57,40
		AM99309202	PB 1100		63,10
		AM99309302	PB 1200		67,90
		AM99309402	PB 1300		73,30
		AM99342902	PB 1400		30,00
		AM99309602	PB 1500		83,40
		AM99309702	PB 1600		88,70
		AM99309101	BL 1000		N.D.
		AM99309201	BL 1100		N.D.
		AM99309301	BL 1200		N.D.
		AM99309401	BL 1300		N.D.
		AM99309501	BL 1400		N.D.
		AM99309601	BL 1500		N.D.
		AM99309701	BL 1600		N.D.
28		**AM99309802**	PB		87,50
		AM99309801	BL		N.D.
29		**AM99321402**	PB		15,40
		AM99321401	BL		N.D.
30		**AM99321502**	PB		17,40
		AM99321501	BL		N.D.
31	4 un	**AM99342902**	PB		30,00
		AM99344601	BL		N.D.

Victoria

Victoria DF / BF

DF	
AM1700801Y	800
AM1700901Y	900
AM1701001Y	1000
BF	
AM1790801Y	800

Acabados perfiles /
Frame finish
Sustituir la Y de la referencia por el código del acabado del perfil elegido:
In the product reference replace Y with the code for the selected finish code.
1 Blanco / White
2 Plata brillo / Glossy silver

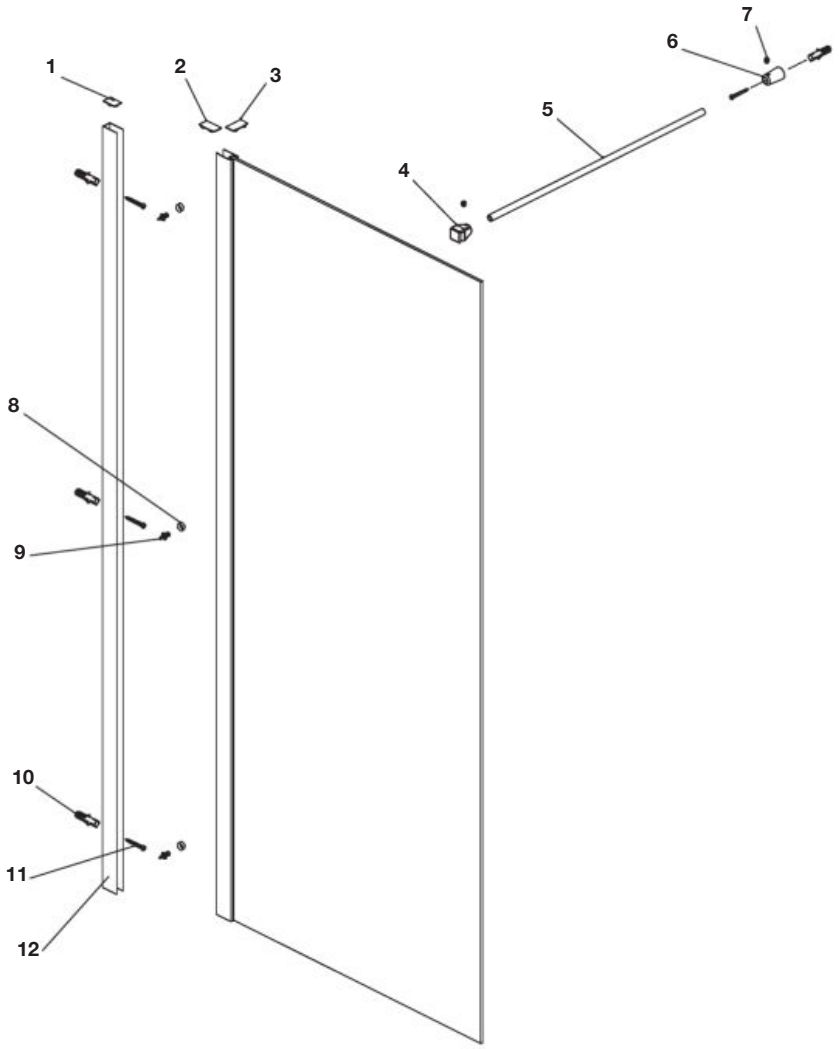

PB: Plata Brillo / Glossy silver
BL: Blanco / White

				€
1	**AM99248202**	PB	4,73	
2				
3				
1	**AM99248201**	BL	4,50	
2				
3				
4	**AM99247402**	PB	N.D.	
5				
6				
7 2 un				

				€
4	**AM99247401**	BL	19,70	
5				
6				
7 2 un				
8 3 un	**AM99248102**	PB	10,20	
9 3 un				
10 3 un				
11 3 un				

				€
8 3 un	**AM99248101**	BL	7,21	
9 3 un				
10 4 un				
11 4 un				
12	**AM99321502**	DF	17,40	
	AM99321702	B1HF/BF	12,10	

Victoria

Victoria LF

AM1870701Y	700
AM1870751Y	750
AM1870801Y	800
AM1870901Y	900

Acabados perfiles /
Frame finish
Sustituir la Y de la referencia por el código del acabado del perfil elegido:
In the product reference replace Y with the code for the selected finish code
1 Blanco / White
2 Plata brillo / Glossy silver

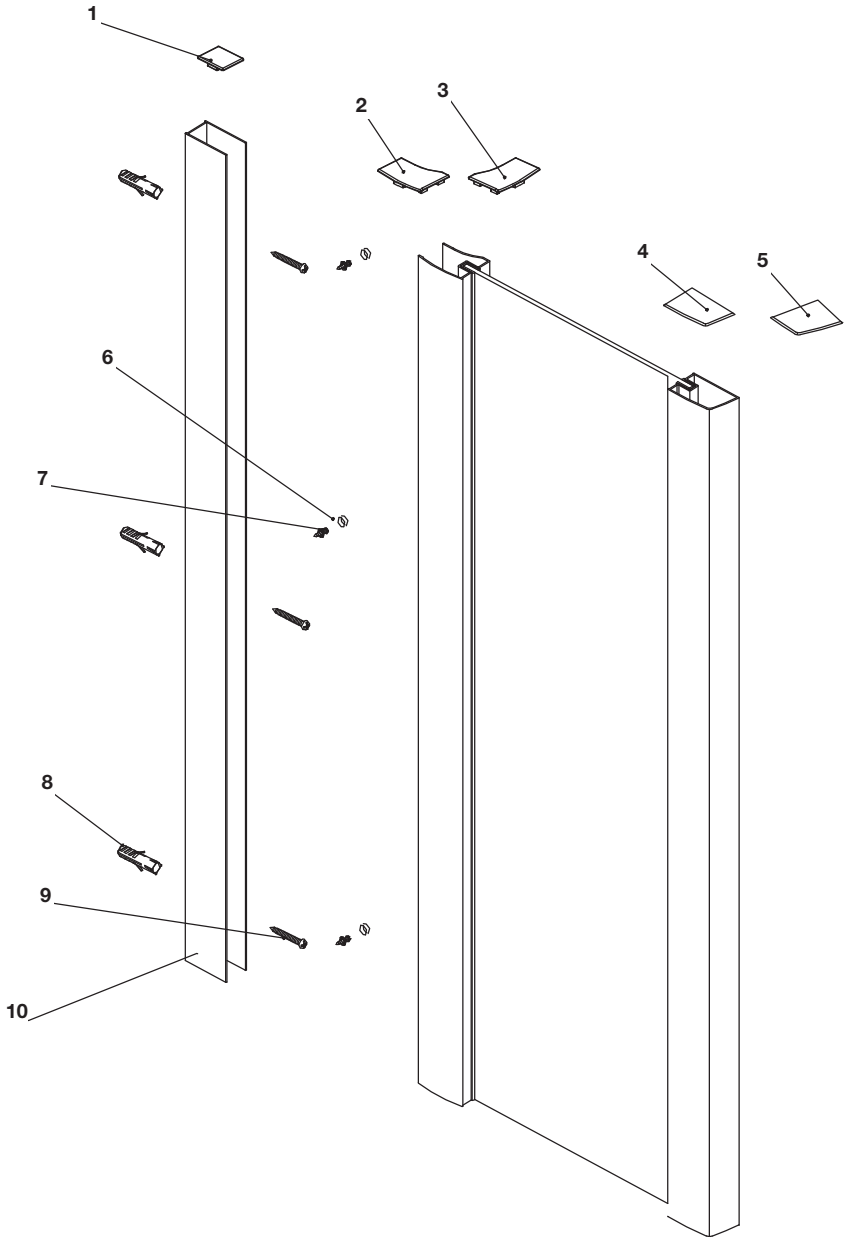

PB: Plata Brillo / Glossy silver
BL: Blanco / White

				€
1		**AM99251700**		4,43
2				
3				
4				
5				
6	3 un	**AM99248102**	PB	10,20
7	6 un			
8	3 un			
9	3 un			

				€
6	3 un	**AM99248101**	BL	7,21
7	6 un			
8	3 un			
9	3 un			
10		**AM99321402**		15,40

Victoria

Victoria PP

AM1730801Y	800
AM1730901Y	900

Acabados perfiles /
Frame finish
Sustituir la Y de la referencia por el código del acabado del perfil elegido:
In the product reference replace Y with the code for the selected finish code
1 Blanco / White
2 Plata brillo / Glossy silver

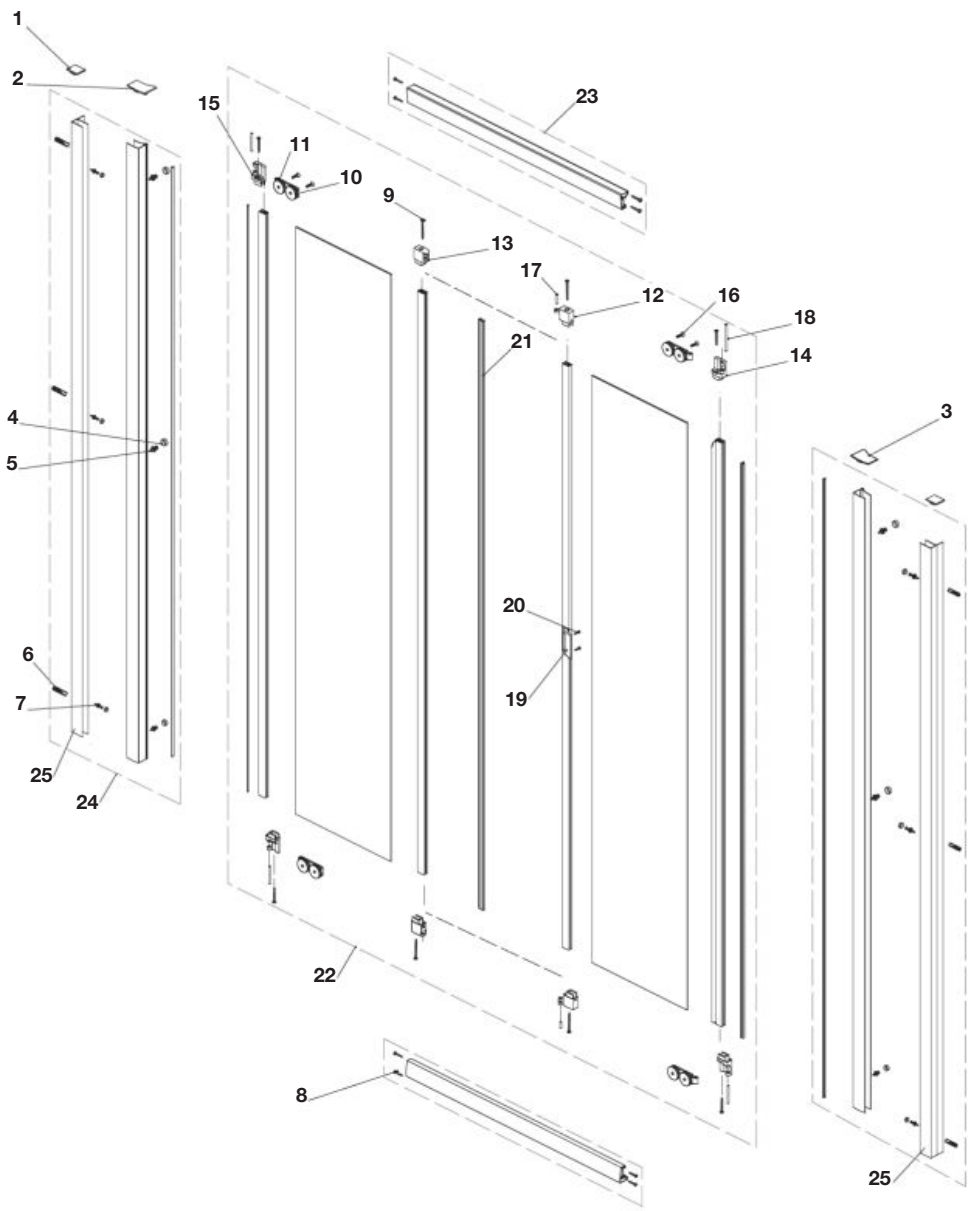

PB: Plata Brillo / Glossy silver
BL: Blanco / White

				€
1	2 un	**AM99248302**		5,39
2				
3				
4	12 un	**AM99248102**	PB	10,20
5	6 un			
6	6 un			
7	6 un			
8	8 un			
9	8 un			
4	12 un	**AM99248101**	BL	7,21
5	6 un			
6	6 un			
7	6 un			
8	8 un			
9	8 un			

				€
10	8 un	**AM99251600**		21,20
11	4 un			
12	2 un			
13	2 un			
14	2 un			
15	2 un			
16	8 un			
17	2 un			
18	4 un			
19		**AM99247502**	PB	5,31
20	4 un			
19		**AM99247501**	BL	3,56
20	4 un			
21		**AM99250100**	1818 mm	4,43

					€
22		**AM99307012**	PB 700		231,00
		AM99307112	PB 800		240,00
		AM99307212	PB 900		250,00
23		**AM99307302**	PB 700		19,60
		AM99307402	PB 800		22,10
		AM99307502	PB 900		24,60
24		**AM99307602**	PB		80,70
25	2 un	**AM99321502**	PB		17,40

Victoria

Victoria 2L2

AM176A901Y	900 x 700
AM176B901Y	900 x 750
AM176A001Y	1000 x 700
AM176B001Y	1000 x 750
AM176C001Y	1000 x 800
AM176A201Y	1200 x 700
AM176B201Y	1200 x 750
AM176C201Y	1200 x 800
AM1760751Y	750 x 750
AM1760801Y	800 x 800
AM1760901Y	900 x 900

Acabados perfiles /
Frame finish
Sustituir la Y de la referencia por el código del acabado del perfil elegido:
In the product reference replace Y with the code for the selected finish code
1 Blanco / White
2 Plata brillo / Glossy silver

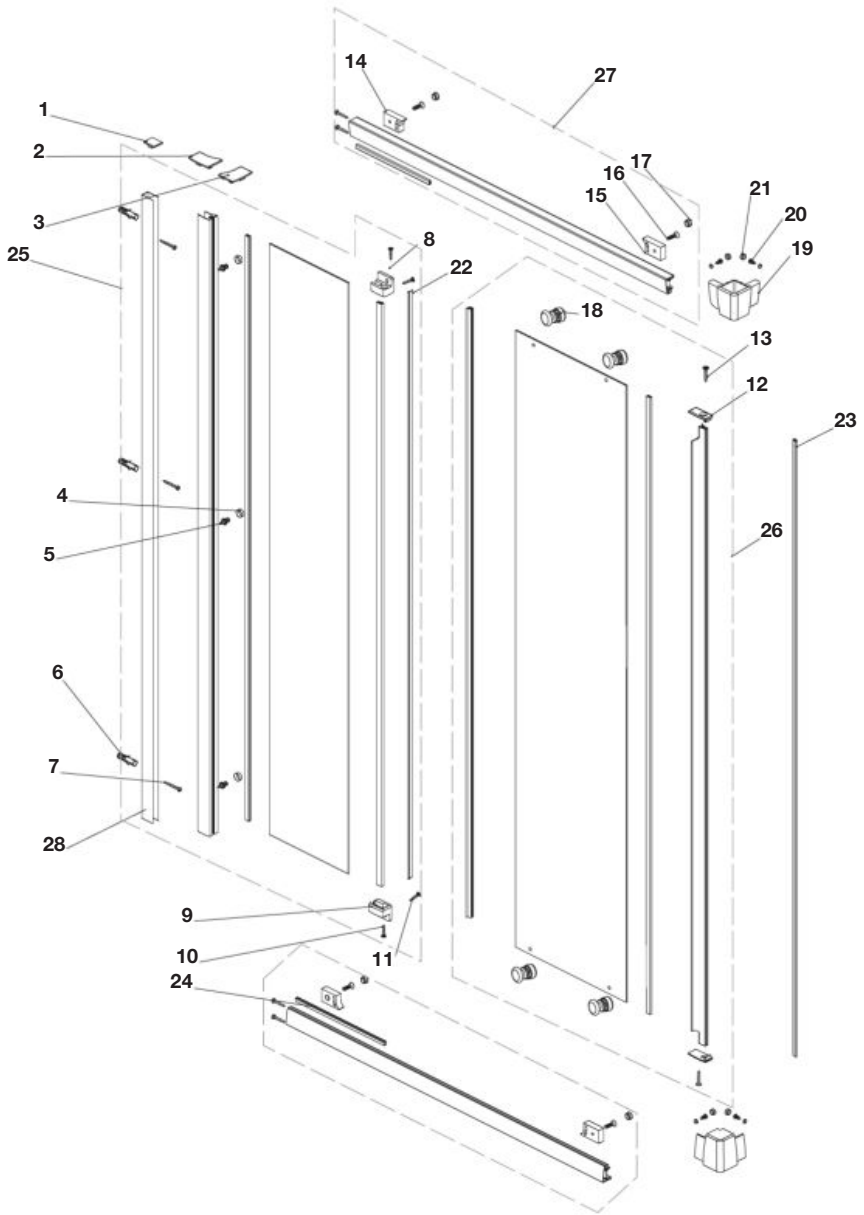

PB: Plata Brillo / Glossy silver
BL: Blanco / White

				€
1	2 un	**AM99248302**		5,39
2				
3				
4	6 un	**AM99248102**	PB	10,20
5	6 un			
6	6 un			
7	14 un			
4	6 un	**AM99248101**	BL	7,21
5	6 un			
6	6 un			
7	14 un			
8	2 un	**AM99247102**	PB	3,60
9	2 un			
10	4 un			
11	4 un			
8	2 un	**AM99247101**	BL	3,24
9	2 un			
10	4 un			
11	4 un			
12	4 un	**AM99342902**	PB	30,00
13	4 un			
14	4 un			
15	4 un			
16	8 un			
17	8 un			
18	8 un			

				€
12	4 un	**AM99247201**	BL	23,70
13	4 un			
14	4 un			
15	4 un			
16	8 un			
17	8 un			
18	8 un			
19	2 un	**AM99247000**	PB	N.D.
20	4 un			
21	4 un			
19	2 un	**AM99247001**	BL	4,59
20	4 un			
21	4 un			
22	2 un	**AM99249700**	1900 mm	2,54
23	2 un	**AM99248500**	1878 mm	11,00
24	4 un	**AM99250200**		6,13

				€
25		**AM99303412**	PB 700	139,00
		AM99303512	PB 750	141,00
		AM99303612	PB 800	143,00
		AM99303712	PB 900	149,00
		AM99303812	PB 1000	153,00
		AM99303912	PB 1200	N.D.
26		**AM99341612**	PB 700	66,30
		AM99304112	PB 750	119,00
		AM99341812	PB 800	N.D.
		AM99341912	PB 900	69,90
		AM99342012	PB 1000	284,00
		AM99342112	PB 1200	82,60
27		**AM99304602**	PB 700	39,40
		AM99304702	PB 750	41,60
		AM99304802	PB 800	44,40
		AM99304902	PB 900	49,70
		AM99305002	PB 1000	54,70
		AM99305102	PB 1200	65,30
28	2 un	**AM99321402**	PB	15,40

Victoria

Victoria MR = 380

AM1770751Y	750

Acabados perfiles /
Frame finish
Sustituir la Y de la referencia por el código del acabado del perfil elegido:
In the product reference replace Y with the code for the selected finish code
1 Blanco / White
2 Plata brillo / Glossy silver

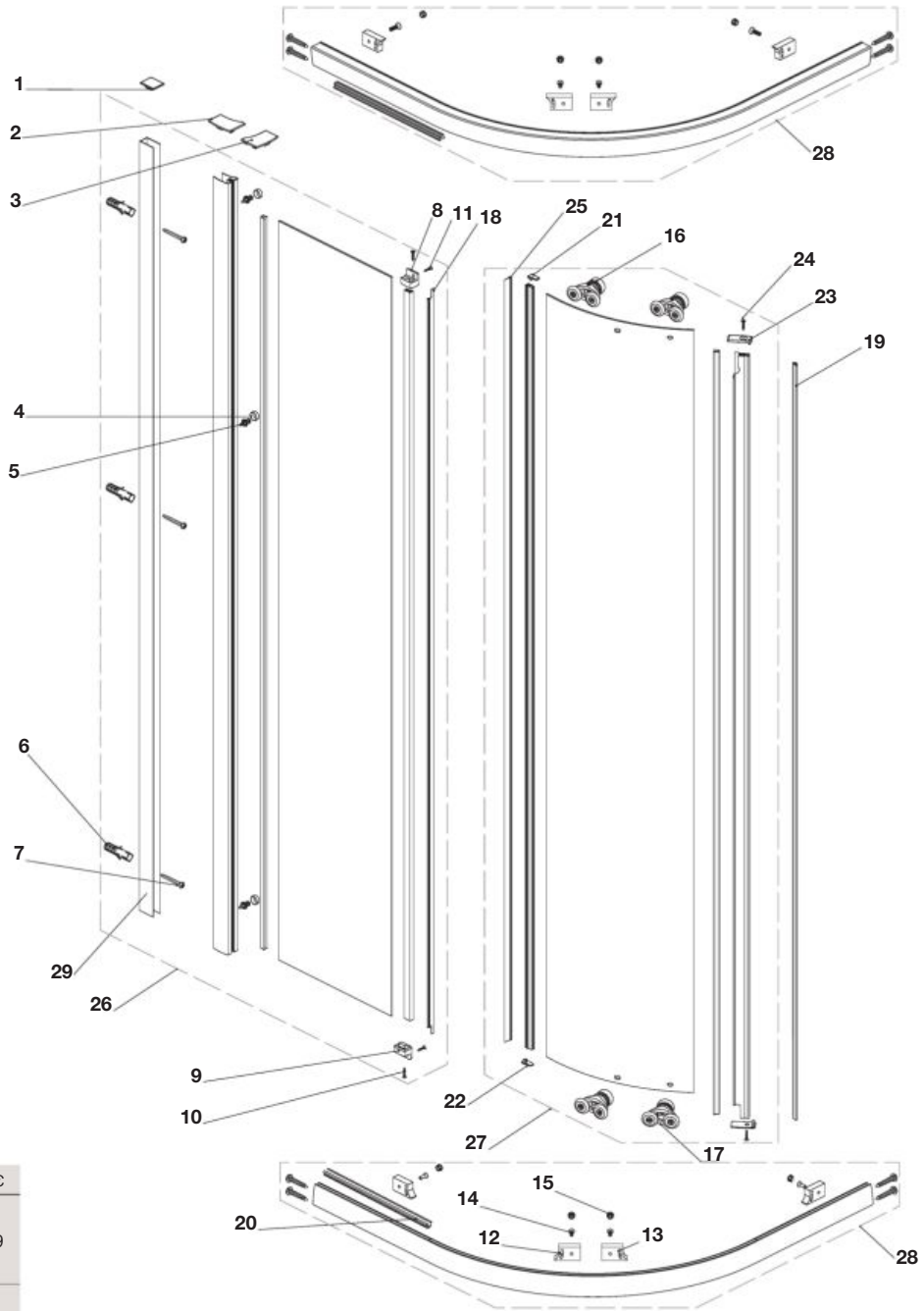

PB: Plata Brillo / Glossy silver
BL: Blanco / White

				€
1	2 un	**AM99248302**		5,39
2				
3				
4	6 un	**AM99248102**	PB	10,20
5	6 un			
6	6 un			
7	14 un			
4	6 un	**AM99248101**	BL	7,21
5	6 un			
6	6 un			
7	14 un			
8	2 un	**AM99247102**	PB	3,60
9	2 un			
10	4 un			
11	4 un			
8	2 un	**AM99247101**	BL	3,24
9	2 un			
10	4 un			
11	4 un			

				€
12	4 un	**AM99247302**	PB	53,90
13	4 un			
14	8 un			
15	8 un			
16	4 un			
17	4 un			
12	4 un	**AM99247301**	BL	63,70
13	4 un			
14	8 un			
15	8 un			
16	4 un			
17	4 un			
18	4 un	**AM99249900**	1900 mm	13,50

				€
19	2 un	**AM99248500**	1878 mm	11,00
20	4 un	**AM99250200**		6,13
21	2 un	**AM99251500**		3,66
22	2 un			
23	4 un			
24	4 un			
25	2 un	**AM99249800**	1900 mm	8,00
26		**AM99310612**	PB 750	157,00
27		**AM99345212**	PB 750	N.D.
28		**AM99311402**	PB 750	55,00
29		**AM99321402**	PB	15,40

Victoria

Victoria MR = 500/550

AM1770801Y	800 (R500)
AM1780801Y	800 (R550)
AM1770901Y	900 (R500)
AM1780901Y	900 (R550)
AM1771001Y	1000 (R500)

Acabados perfiles /
Frame finish
Sustituir la Y de la referencia por el código del acabado del perfil elegido:
In the product reference replace Y with the code for the selected finish code
1 Blanco / White
2 Plata brillo / Glossy silver

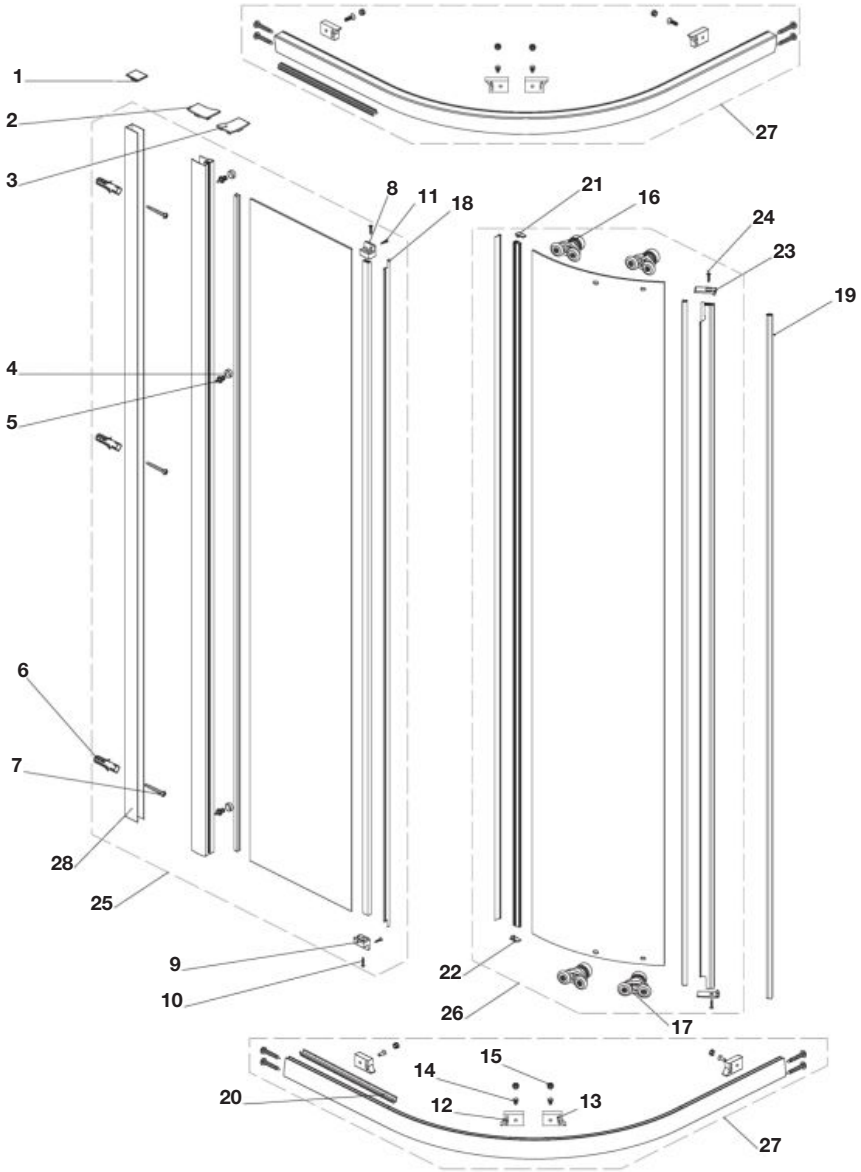

PB: Plata Brillo / Glossy silver
BL: Blanco / White

					€
1	2 un	**AM99248302**			5,39
2					
3					
4	6 un	**AM99248102**	PB		10,20
5	6 un				
6	6 un				
7	14 un				
4	6 un	**AM99248101**	BL		7,21
5	6 un				
6	6 un				
7	14 un				
8	2 un	**AM99247102**	PB		3,60
9	2 un				
10	4 un				
11	4 un				
8	2 un	**AM99247101**	BL		3,24
9	2 un				
10	4 un				
11	4 un				
12	4 un	**AM99247302**	PB		53,90
13	4 un				
14	8 un				
15	8 un				
16	4 un				
17	4 un				
12	4 un	**AM99247301**	BL		63,70
13	4 un				
14	8 un				
15	8 un				
16	4 un				
17	4 un				
18	4 un	**AM99249900**	1900 mm		13,50
19	2 un	**AM99249500**	1878 mm		11,60
20	4 un	**AM99250200**			6,13
21	2 un	**AM99251500**			3,66
22	2 un				
23	4 un				
24	4 un				

				€
25		**AM99310112**	PB 800 (R550)	151,00
		AM99310212	PB 900 (R550)	160,00
		AM99310312	PB 800 (R500)	153,00
		AM99310412	PB 900 (R500)	161,00
		AM99310512	PB 1000 (R500)	170,00
26		**AM99345112**	PB	N.D.
27		**AM99310902**	PB 800 (R550)	55,40
		AM99311002	PB 900 (R550)	59,60
		AM99311102	PB 800 (R500)	55,70
		AM99311202	PB 900 (R500)	60,10
		AM99311302	PB 1000 (R500)	65,00
28	2 un	**AM99321402**	PB	15,40

Victoria

Victoria B1H

AM18008512 | 850

Acabados perfiles /
Frame finish
Sustituir la Y de la referencia por el código del acabado del perfil elegido:
In the product reference replace Y with the code for the selected finish code
1 Blanco / White
2 Plata brillo / Glossy silver

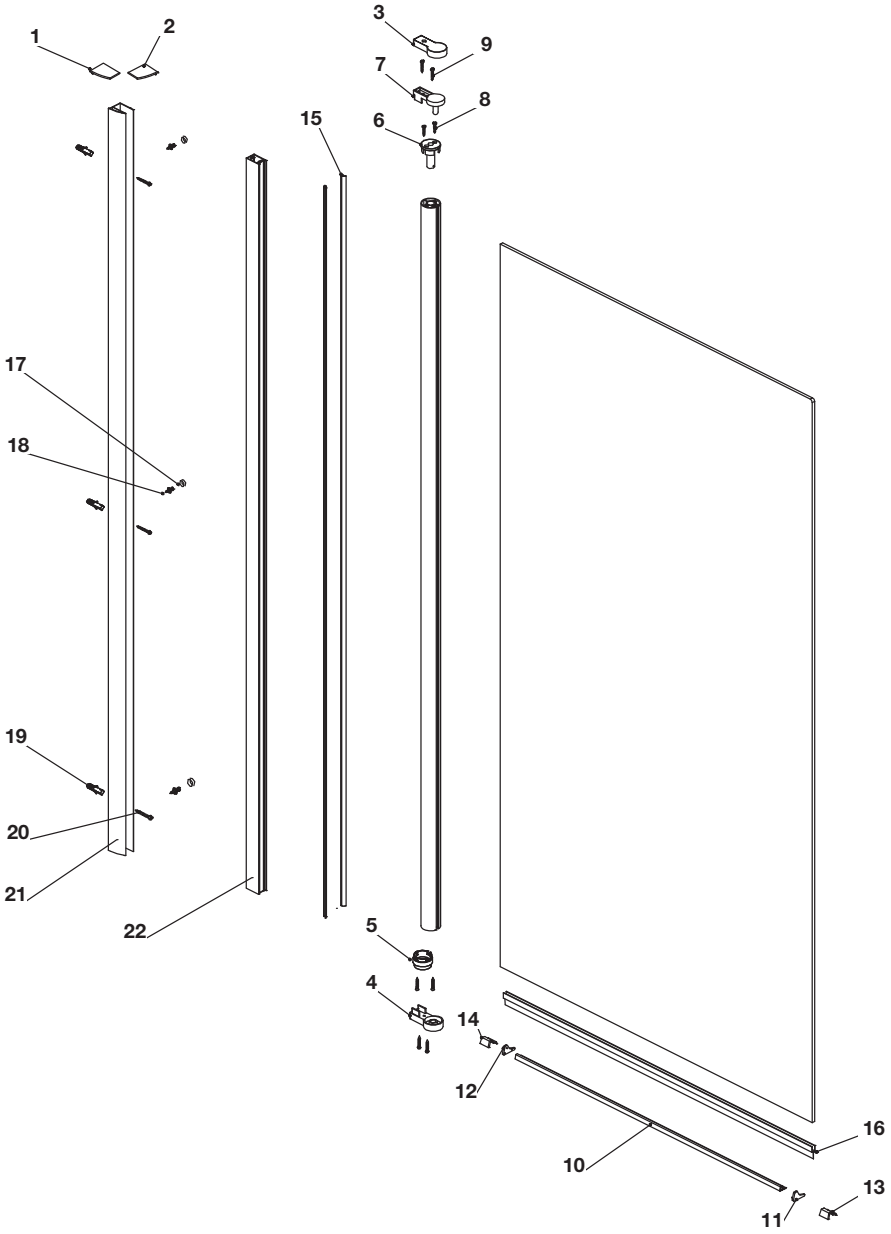

PB: Plata Brillo / Glossy silver
BL: Blanco / Whitee

				€
1		**AM99248202**	PB	4,73
2				
3				
1		**AM99248201**	BL	4,50
2				
3				
4		**AM99247702**	PB	11,50
5				
6				
7				
8	4 un			
9	4 un			
4		**AM99247701**	BL	12,40
5				
6				
7				
8	4 un			
9	4 un			

				€
10		**AM99248002**	PB	15,10
11				
12				
13				
14				
10		**AM99248001**	BL	9,79
11				
12				
13				
14				
15	2 un	**AM99250000**	1500 mm	3,60
16		**AM99250300**		4,59
17	3 un	**AM99248102**	PB	10,20
18	3 un			
19	3 un			
20	3 un			

				€
17	3 un	**AM99248101**	BL	7,21
18	3 un			
19	3 un			
20	3 un			
21		**AM99321802**	PB	15,40
22		**AM99321902**	PB	12,40

Victoria

Victoria B1HF

AM1811001Y	1000 (325+675)

Acabados perfiles /
Frame finish
Sustituir la Y de la referencia por el código del acabado del perfil elegido:
In the product reference replace Y with the code for the selected finish code.
1 Blanco / White
2 Plata brillo / Glossy silver

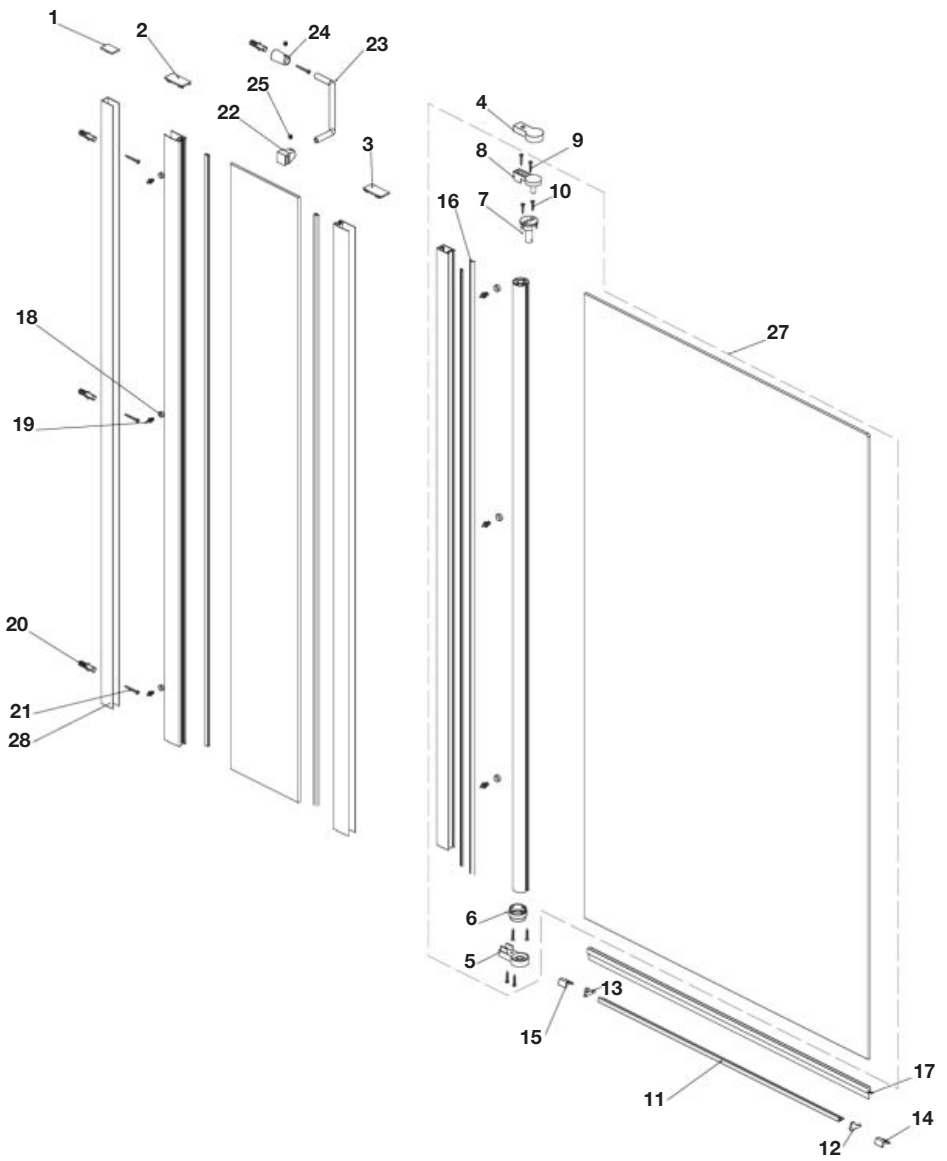

PB: Plata Brillo / Glossy silver
BL: Blanco / White

				€
1	**AM99248202**	PB	4,73	
2				
3				
4				
1	**AM99248201**	BL	4,50	
2				
3				
4				
5	**AM99247702**	PB	11,50	
6				
7				
8				
9 4 un				
10 4 un				
5	**AM99247701**	BL	12,40	
6				
7				
8				
9 4 un				
10 4 un				

				€
11	**AM99248002**	PB	15,10	
12				
13				
14				
15				
11	**AM99248001**	BL	9,79	
12				
13				
14				
15				
16 2 un	**AM99250000**	1500 mm	3,60	
17	**AM99250300**		4,59	
18 6 un	**AM99248102**	PB	10,20	
19 6 un				
20 4 un				
21 4 un				
18 6 un	**AM99248101**	BL	7,21	
19 6 un				
20 4 un				
21 4 un				

				€
22	**AM99247602**	PB	15,60	
23				
24				
25 2 un				
22	**AM99247601**	BL	19,70	
23				
24				
25 2 un				
27	**AM99310012**	PB	173,00	
28	**AM99321702**	PB	12,10	

Victoria

Victoria L3-E

AM1720801Y	800
AM1720901Y	900
AM1721001Y	1000

Acabados perfiles /
Frame finish
Sustituir la Y de la referencia por el código del acabado del perfil elegido:
In the product reference replace Y with the code for the selected finish code
1 Blanco / White
2 Plata brillo / Glossy silver

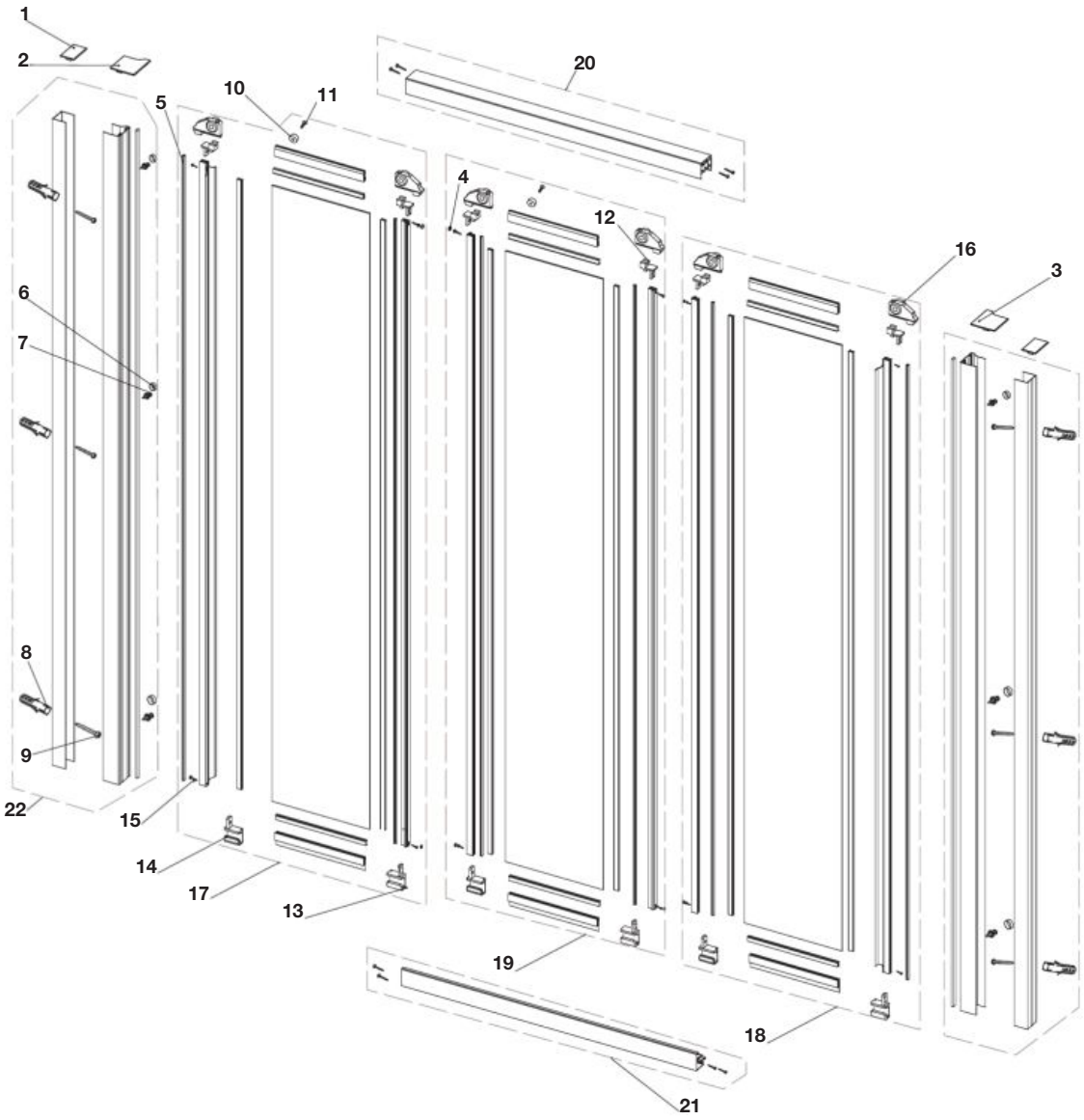

PB: Plata Brillo / Glossy silver
BL: Blanco / White

				€
1	2 un	**AM99248402**	PB	3,94
2				
3				
4	14 un			
1	2 un	**AM99248401**	BL	2,71
2				
3				
4	14 un			
5	2 un	**AM99249600**	1850	6,34
6	6 un	**AM99248102**	PB	10,20
7	9 un			
8	6 un			
9	6 un			
6	6 un	**AM99248101**	BL	7,21
7	9 un			
8	6 un			
9	6 un			

				€
10	4 un	**AM99247802**	PB	7,10
11	4 un			
12	6 un			
13	3 un			
14	3 un			
15	12 un			
10	4 un	**AM99247801**	BL	7,21
11	4 un			
12	6 un			
13	3 un			
14	3 un			
15	12 un			
16	6 un	**AM99247902**	PB	15,70
		AM99247901	BL	14,10
17		**AM99305212**	PB 800	128,00
		AM99305312	PB 900	131,00
		AM99305412	PB 1000	135,00

			€
18	**AM99305512**	PB 800	127,00
	AM99305612	PB 900	131,00
	AM99305712	PB 1000	135,00
19	**AM99305812**	PB 800	125,00
	AM99305912	PB 900	131,00
	AM99306012	PB 1000	135,00
20	**AM99306102**	PB 800	30,40
	AM99306202	PB 900	35,10
	AM99306302	PB 1000	38,40
21	**AM99306402**	PB 800	24,60
	AM99306502	PB 900	27,10
	AM99306602	PB 1000	30,00
22	**AM99306702**	PB	174,00

Easy Express

Easy L2-E

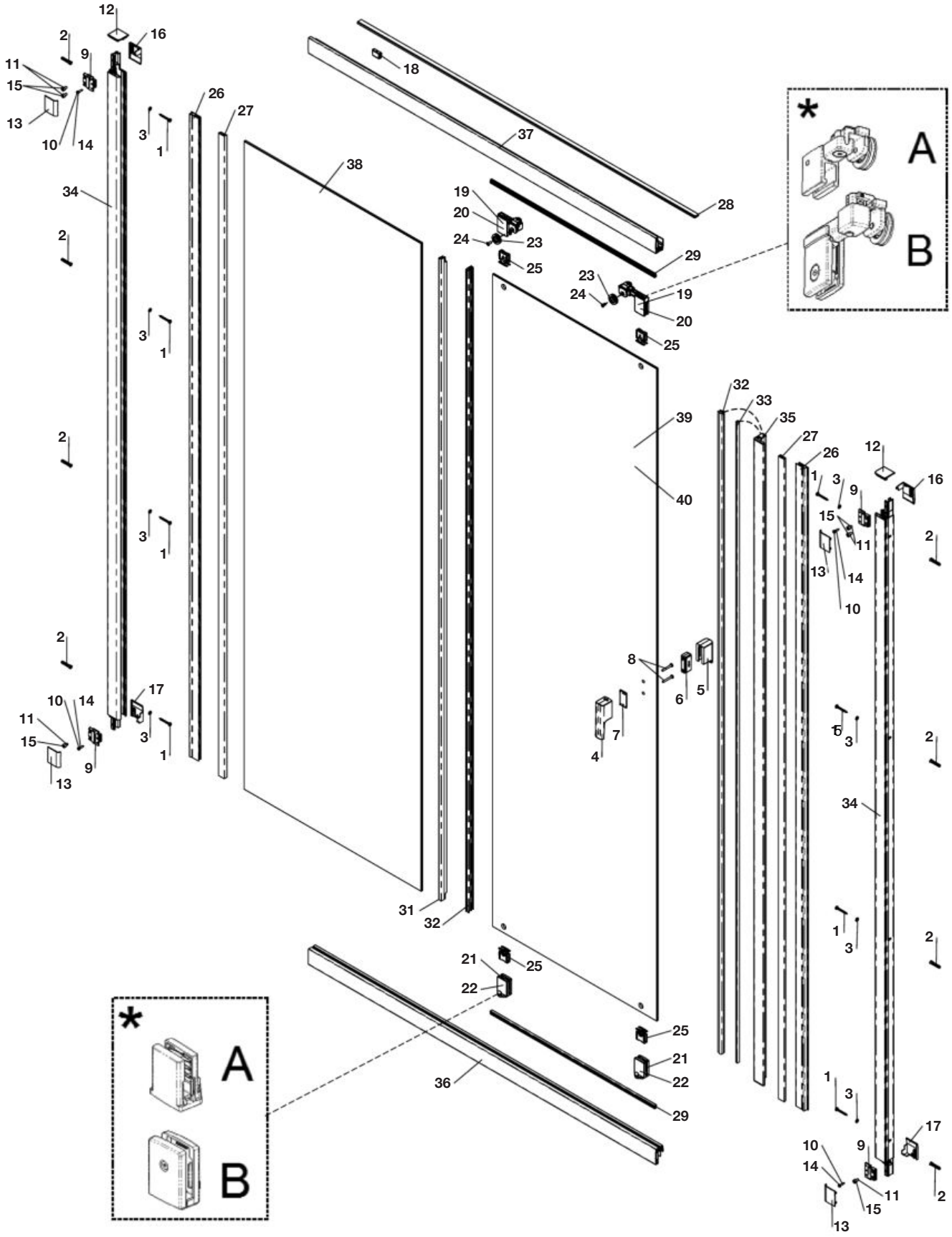

Easy Express

Easy L2-E

PB: Plata Brillo / Glossy silver
BL: Blanco / White
A: Anterior a Octubre 2013 / Before October 2013
B: Posterior a Octubre 2013 / After October 2013

					€
1	4 un	**AM99262900**			10,30
2	4 un				
3	4 un				
4		**AM99263002**	PB		48,60
5					
6					
7	2 un				
8	2 un				
4		**AM99263001**	BL		42,60
5					
6					
7	2 un				
8	2 un				
9	2 un	**AM99263100**			32,00
10	2 un				
11	4 un				
12	2 un	**AM99263200**			15,90
13	4 un	**AM99263302**	PB		27,10
	4 un	**AM99263301**	BL		7,44
14	6 un	**AM99263400**			18,50
15	6 un				
16	2 un	**AM99263502**	PB		28,10
17	2 un				
16	2 un	**AM99263501**	BL		7,44
17	2 un				
18		**AM99263600**			18,40

					€
19	2 un	**AM99263702**	PB - A		N.D.
	2 un	**AM99341201**	BL - A		58,00
20	2 un	**AM99341202**	PB - B		51,70
	2 un	**AM99341201**	BL - B		58,00
21	2 un	**AM99263902**	PB - A		N.D.
	2 un	**AM99263901**	BL - A		14,70
22	2 un	**AM99264002**	PB - B		30,60
	2 un	**AM99264001**	BL - B		29,30
23		**AM99264100**			7,13
24					
25	4 un	**AM99264200**	B		12,50
26		**AM99266300**	2000 mm		35,40
27		**AM99266400**	2000 mm		34,90
28		**AM99266500**			54,40
29	2 un				
30		**AM99266600**	2000 mm		36,80
31		**AM99266700**			25,10
32					
33		**AM99267200**	2200 mm		28,10
34		**AM99267502**	PB		122,00
		AM99267501	BL		88,10
35		**AM99267602**	PB		125,00
		AM99267601	BL		N.D.

				€
36	**AM99270302**	1102 - PB		62,00
	AM99270702	1177 - PB		N.D.
	AM99271302	1327 - PB		69,90
	AM99271402	1352 - PB		N.D.
	AM99271502	1377 - PB		N.D.
	AM99271602	1402 - PB		78,90
	AM99272002	1502 - PB		N.D.
	AM99272202	1552 - PB		111,00
37	**AM99274402**	1102 - PB		84,40
	AM99274702	1152 - PB		N.D.
	AM99274802	1177 - PB		N.D.
	AM99275602	1377 - PB		66,30
	AM99276302	1552 - PB		83,40
38	**AM99280810**	1878 x 0559 x 6		159,00
	AM99281210	1878 x 0659 x 6		N.D.
	AM99281410	1878 x 0709 x 6		N.D.
	AM99281510	1878 x 0734 x 6		N.D.
39	**AM99283310**	1950 x 0550 (A)*		N.D.
	AM99283410	1950 x 0600 (A)*		281,00
	AM99283510	1950 x 0650 (A)*		N.D.
	AM99283610	1950 x 0700 (A)*		N.D.
	AM99283710	1950 x 0800 (A)*		N.D.
40	**AM99284310**	1950 x 0550 (B)*		N.D.
	AM99284410	1950 x 0600 (B)*		N.D.
	AM99284510	1950 x 0650 (B)*		N.D.
	AM99284610	1950 x 0700 (B)*		N.D.
	AM99284710	1950 x 0800 (B)*		N.D.

Easy Express

Easy L4-E

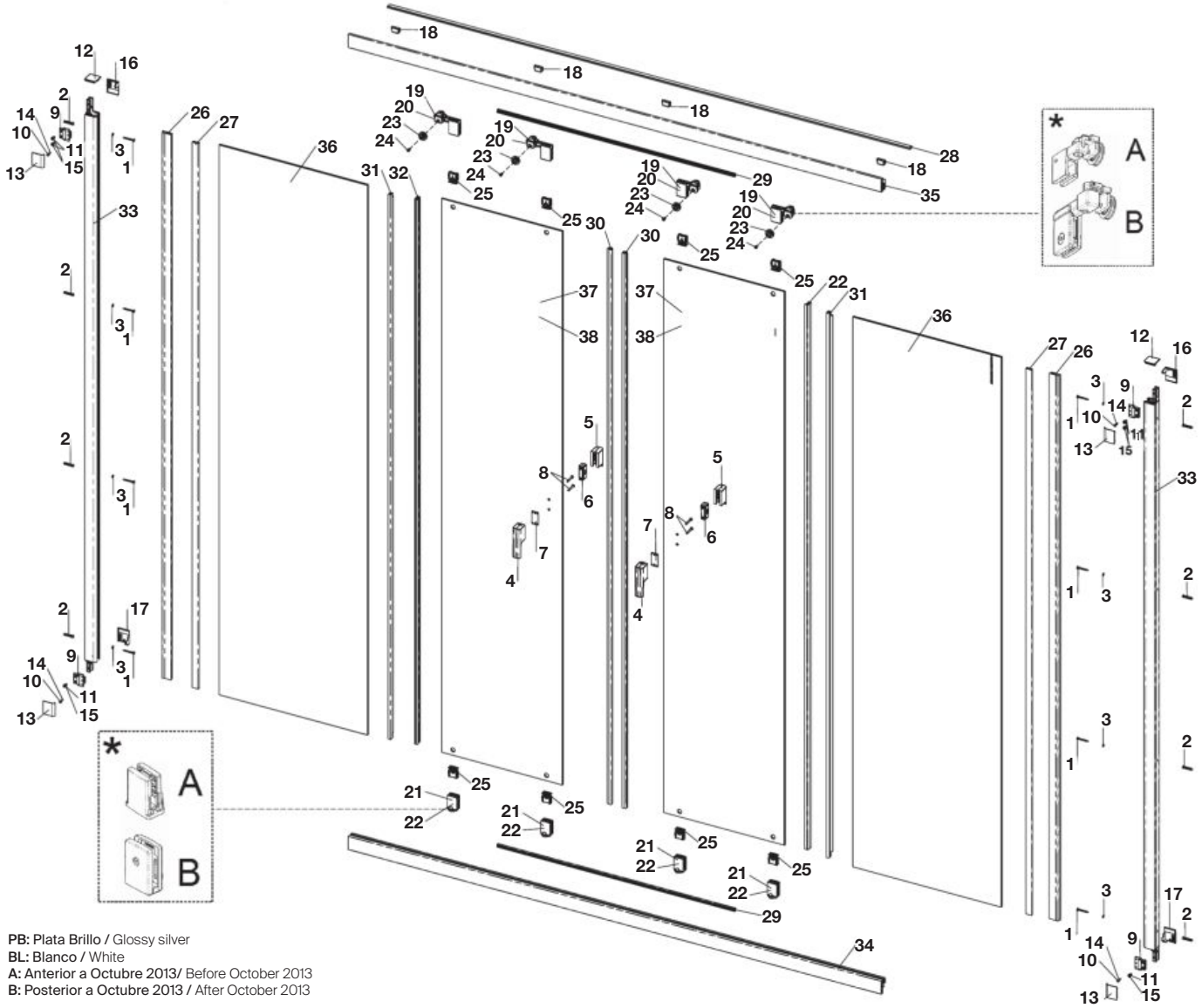

PB: Plata Brillo / Glossy silver
BL: Blanco / White
A: Anterior a Octubre 2013/ Before October 2013
B: Posterior a Octubre 2013 / After October 2013

					€
1	4 un				
2	4 un	**AM99262900**			10,30
3	4 un				
4					
5					
6		**AM99263002**	PB		48,60
7					
8	2 un				
4					
5					
6		**AM99263001**	BL		42,60
7					
8	2 un				
9	2 un				
10	2 un	**AM99263100**			32,00
11	4 un				
12	2 un	**AM99263200**			15,90
13	4 un	**AM99263302**	PB		27,10
	4 un	**AM99263301**	BL		7,44
14	6 un	**AM99263400**			18,50
15	6 un				

				€
16		**AM99263502**	PB	28,10
17				
16		**AM99263501**	BL	7,44
17				
18		**AM99263600**		18,40
19	2 un	**AM99263702**	PB (A)*	N.D.
	2 un	**AM99341201**	BL (A)*	58,00
20	2 un	**AM99341202**	PB (B)*	51,70
	2 un	**AM99341201**	BL (B)*	58,00
21	2 un	**AM99263902**	PB (A)*	N.D.
	2 un	**AM99263901**	BL (A)*	14,70
22	2 un	**AM99264002**	PB (B)*	30,60
	2 un	**AM99264001**	BL (B)*	29,30
23		**AM99264100**		7,13
24				
25	4 un	**AM99264200**	(B)*	12,50
26		**AM99266300**	2000 mm	35,40
27		**AM99266400**	2000 mm	34,90
28		**AM99266500**		54,40
29	2 un			
30		**AM99266600**	2000 mm	36,80

				€
31		**AM99266700**		25,10
32				
33		**AM99267502**	PB	122,00
		AM99267501	BL	88,10
34		**AM99272002**	1502 - PB	N.D.
		AM99272202	1552 - PB	111,00
		AM99272302	1577 - PB	N.D.
		AM99273202	1802 - PB	N.D.
35		**AM99276302**	1552 - PB	83,40
36		**AM99280310**	1878 x 0474 x 6	N.D.
		AM99280510	1878 x 0487 x 6	119,00
37		**AM99283010**	1950 x 0400 (A)*	N.D.
		AM99283110	1950 x 0450 (A)*	N.D.
		AM99283210	1950 x 0500 (A)*	N.D.
38		**AM99284010**	1950 x 0400 (B)*	140,00
		AM99284110	1950 x 0450 (B)*	N.D.
		AM99284210	1950 x 0500 (B)*	161,00

Easy Express

Easy DF

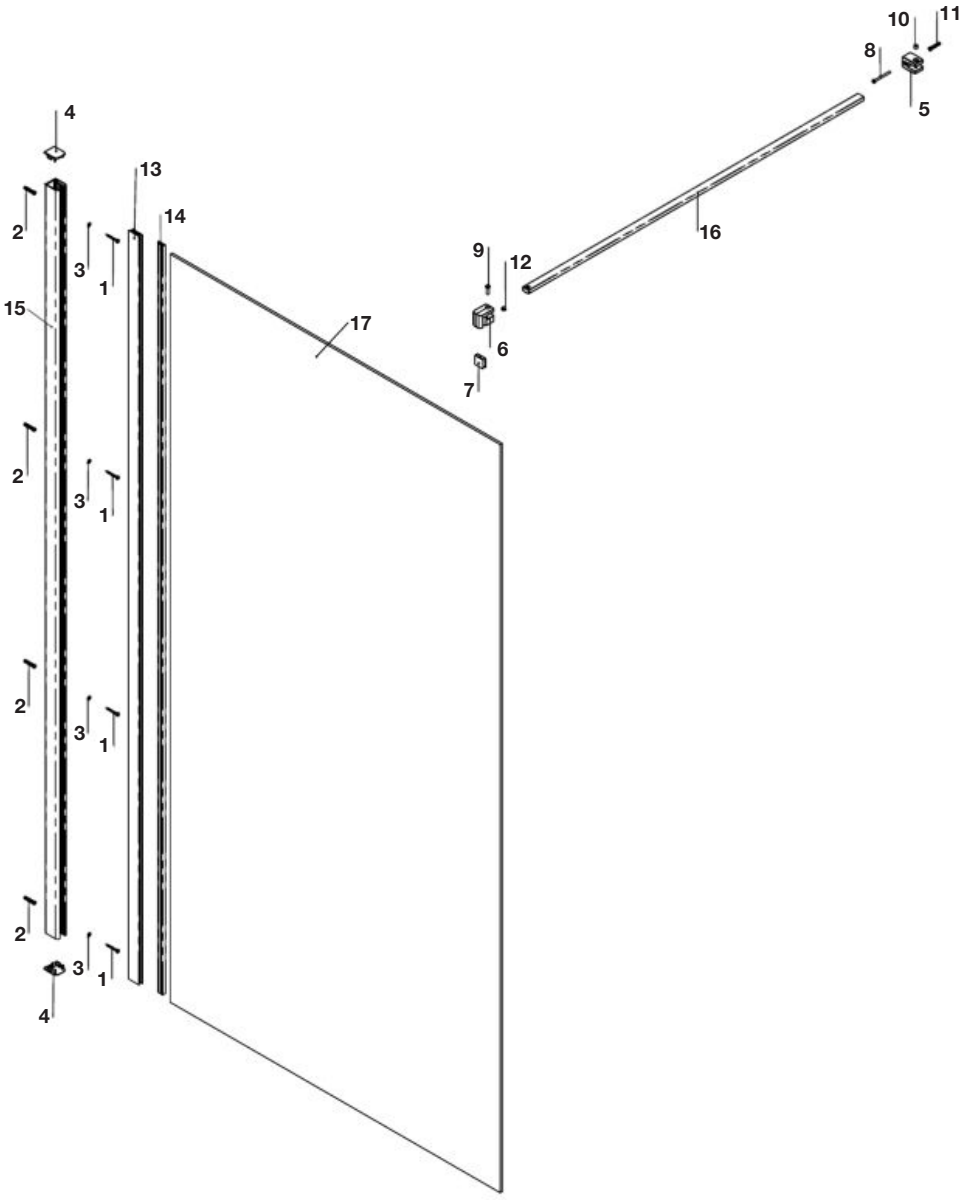

PB: Plata Brillo / Glossy silver
BL: Blanco / White

				€
1	4 un			
2	4 un	**AM99262900**		10,30
3	4 un			
4	2 un	**AM99264800**		11,30
5				
6				
7				
8				
9	2 un	**AM99265602**	PB	35,70
10				
11				
12				

				€
5				
6				
7				
8				
9	2 un	**AM99265601**	BL	29,60
10				
11				
12				
13		**AM99266300**	2000 mm	35,40
14		**AM99266400**	2000 mm	34,90
15		**AM99267902**	PB	91,70
		AM99267901	BL	83,70
16		**AM99269502**	1000 mm - PB	27,00
		AM99269501	1000 mm - BL	22,10
17		**AM99282410**	1948 x 0986 x 6	-
		AM99282510	1948 x 1186 x 6	N.D.

Easy Express

Easy LF-C

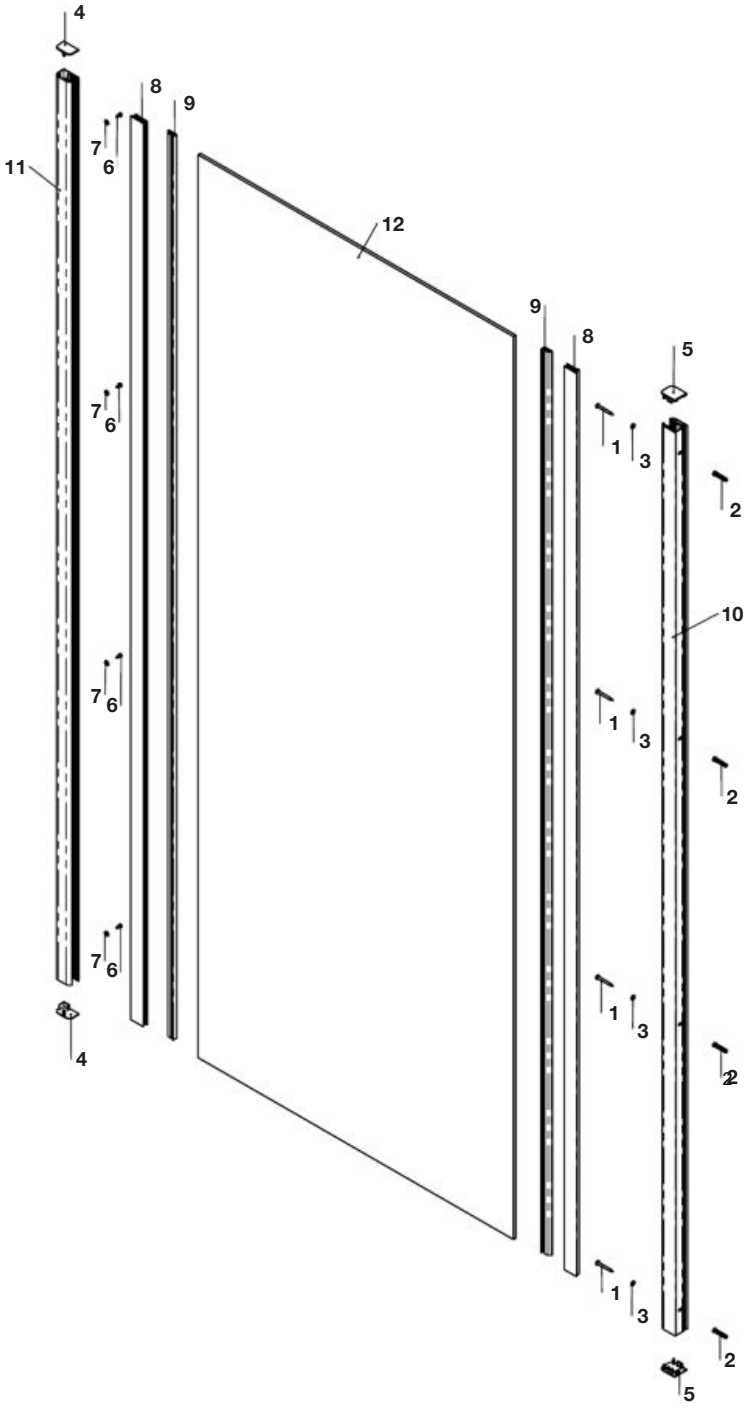

PB: Plata Brillo / Glossy silver
BL: Blanco / White

				€
1	4 un			
2	4 un	**AM99262900**		10,30
3	4 un			
4	2 un	**AM99264700**		8,97
5	2 un	**AM99264800**		11,30
6	4 un	**AM99264900**		9,94
7	4 un			
8		**AM99266300**	2000 mm	35,40
9		**AM99266400**	2000 mm	34,90

			€
10	**AM99267902**	PB	91,70
	AM99267901	BL	83,70
11	**AM99268402**	PB	56,40
	AM99268401	BL	N.D.
12	**AM99282010**	1948 x 0653 x 6	-
	AM99282110	1948 x 0753 x 6	N.D.
	AM99282210	1948 x 0853 x 6	N.D.
	AM99282310	1948 x 0953 x 6	-

Easy Express

Easy L2

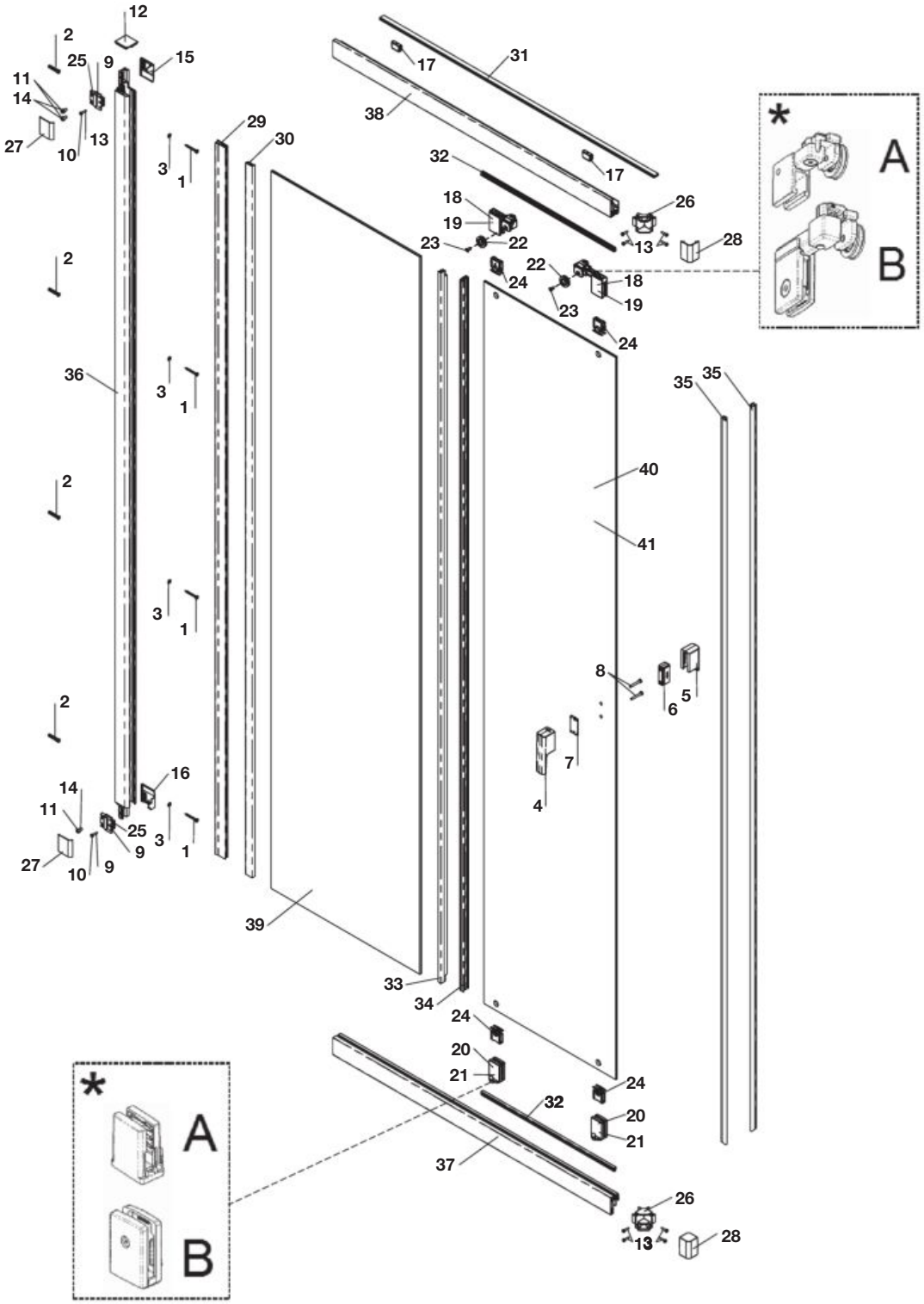

Easy Express

Easy L2

PB: Plata Brillo / Glossy silver
BL: Blanco / White
A: Anterior a Octubre 2013 / Before October 2013
B: Posterior a Octubre 2013 / After October 2013

				€
1	4 un	**AM99262900**		10,30
2	4 un			
3	4 un			
4		**AM99263002**	PB	48,60
5				
6				
7	2 un			
8	2 un			
4		**AM99263001**	BL	42,60
5				
6				
7	2 un			
8	2 un			
9	2 un	**AM99263100**		32,00
10	2 un			
11	4 un			
12	2 un	**AM99263200**		15,90
13	6 un	**AM99263400**		18,50
14	6 un			
15	2 un	**AM99263502**	PB	28,10
16	2 un			
15	2 un	**AM99263501**	BL	7,44
16	2 un			
17		**AM99263600**		18,40
18	2 un	**AM99263702**	PB (A)*	N.D.
		AM99341201	BL (A)*	58,00
19	2 un	**AM99341202**	PB (B)*	51,70
		AM99341201	BL (B)*	58,00
20	2 un	**AM99263902**	PB (A)*	N.D.
		AM99263901	BL (A)*	14,70
21	2 un	**AM99264002**	PB (B)*	30,60
		AM99264001	BL (B)*	29,30
22		**AM99264100**		7,13
23				
24	4 un	**AM99264200**	(B)*	12,50
25	2 un	**AM99264300**		N.D.
26				
27	2 un	**AM99264402**	PB	21,00
28				

				€
27	2 un	**AM99264401**	BL	10,50
28				
29		**AM99266300**	2000 mm	35,40
30		**AM99266400**	2000 mm	34,90
31		**AM99266500**		54,40
32	2 un			
33		**AM99266700**		25,10
34				
35	2 un	**AM99288400**	2000 mm	20,40
36		**AM99267502**	PB	122,00
		AM99267501	BL	88,10
37		**AM99269802**	0631 - PB	27,90
		AM99269902	0681 - PB	N.D.
		AM99270002	0731 - PB	47,70
		AM99270102	0831 - PB	58,30
		AM99270202	0931 - PB	N.D.
		AM99270502	1131 - PB	66,00
38		**AM99273902**	0631 - PB	41,70
		AM99274002	0681 - PB	N.D.
		AM99274102	0731 - PB	N.D.
		AM99274202	0831 - PB	N.D.
		AM99274302	0931 - PB	61,30
		AM99274602	1131 - PB	N.D.
39		**AM99278710**	1878 x 0285 x 6	N.D.
		AM99279010	1878 x 0335 x 6	N.D.
		AM99279910	1878 x 0435 x 6	N.D.
40		**AM99282810**	1950 x 0350 (A)*	N.D.
		AM99282910	1950 x 0375 (A)*	183,00
		AM99283010	1950 x 0400 (A)*	N.D.
		AM99283110	1950 x 0450 (A)*	N.D.
		AM99283210	1950 x 0500 (A)*	N.D.
		AM99283410	1950 x 0600 (A)*	281,00
41		**AM99283810**	1950 x 0350 (B)*	N.D.
		AM99283910	1950 x 0375 (B)*	N.D.
		AM99284010	1950 x 0400 (B)*	140,00
		AM99284110	1950 x 0450 (B)*	N.D.
		AM99284210	1950 x 0500 (B)*	161,00
		AM99284410	1950 x 0600 (B)*	N.D.

Easy Express

Easy MR (R500)

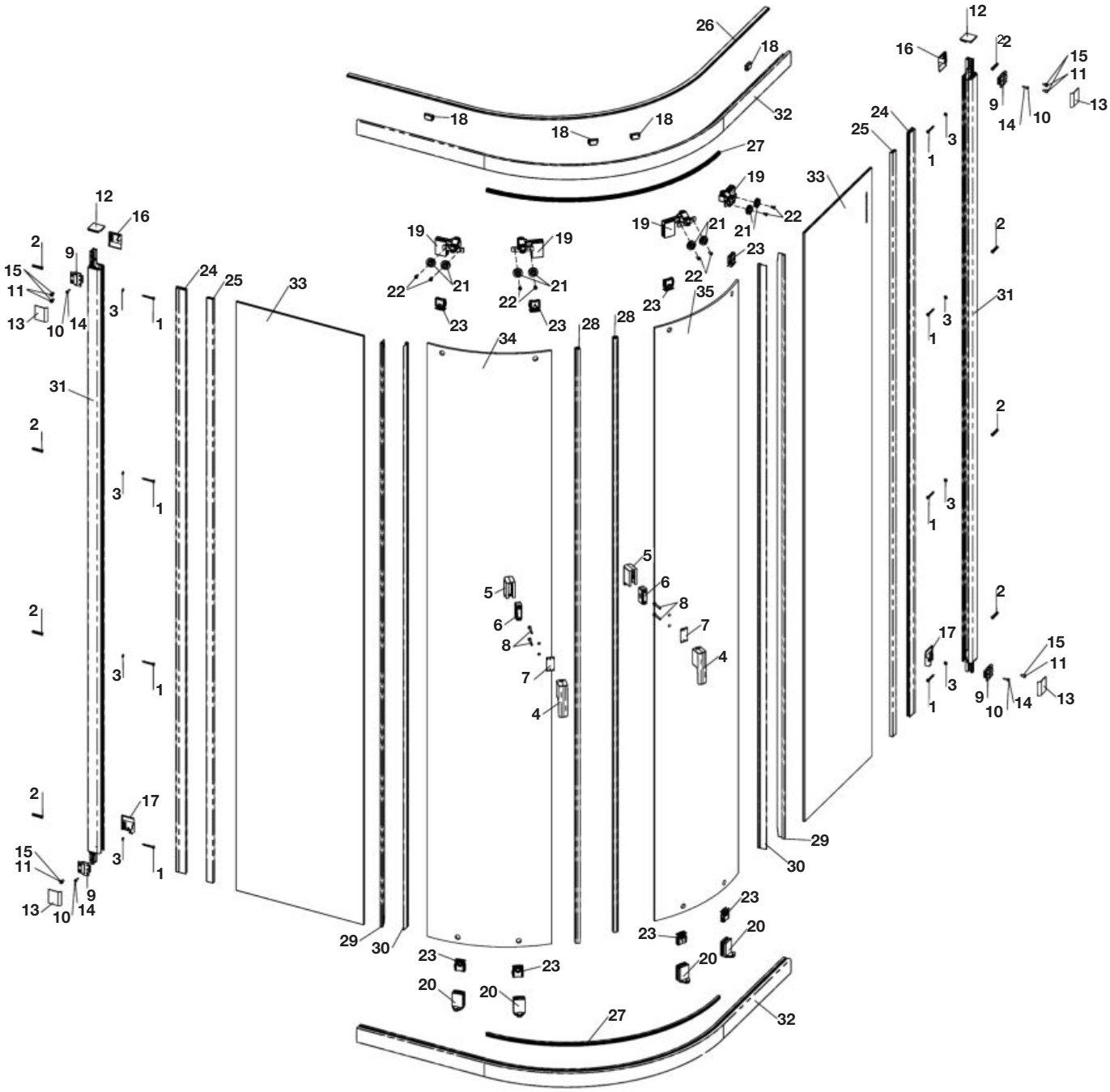

Easy Express

Easy MR (R500)

PB: Plata Brillo / Glossy silver
BL: Blanco / White
A: Anterior a Octubre 2013 / Before October 2013
B: Posterior a Octubre 2013 / After October 2013

				€
1	4 un	**AM99262900**		10,30
2	4 un			
3	4 un			
4		**AM99263002**	PB	48,60
5				
6				
7				
8	2 un			
4		**AM99263001**	BL	42,60
5				
6				
7				
8	2 un			
9	2 un	**AM99263100**		32,00
10	2 un			
11	4 un			
12	2 un	**AM99263200**		15,90
13	4 un	**AM99263302**	PB	27,10
		AM99263301	BL	7,44
14	6 un	**AM99263400**		18,50
15	6 un			
16	2 un	**AM99263502**	PB	28,10
17	2 un			
16	2 un	**AM99263501**	BL	7,44
17	2 un			
18		**AM99263600**		18,40
19	2 un	**AM99341402**	PB	57,70
		AM99286401	BL	70,10

				€
20	2 un	**AM99286602**	PB	19,60
		AM99286601	BL	21,00
21		**AM99264100**		7,13
22				
23	4 un	**AM99264200**	(B)*	12,50
24		**AM99266300**	2000 mm	35,40
25		**AM99266400**	2000 mm	34,90
26		**AM99266500**		54,40
27	2 un			
28		**AM99266600**	2000 mm	36,80
29	2 un	**AM99286800**		40,00
30	2 un			
31		**AM99267502**	PB	122,00
		AM99267501	BL	88,10
32		**AM99278002**	(MR 800) - PB	214,00
		AM99278001	(MR 800) - BL	N.D.
		AM99278102	(MR 900) - PB	N.D.
		AM99278101	(MR 900) - BL	N.D.
		AM99278202	(MR 1000) - PB	-
		AM99278201	(MR 1000) - BL	N.D.
33		**AM99278610**	1878 x 0277 x 6	-
		AM99279310	1878 x 0377 x 6	-
		AM99280410	1878 x 0477 x 6	-
34		**AM99285910**	(MR 800, 900, 1000)	N.D.
35		**AM99286010**	(MR 800, 900, 1000)	N.D.

Easy Express

Easy MR (R550)

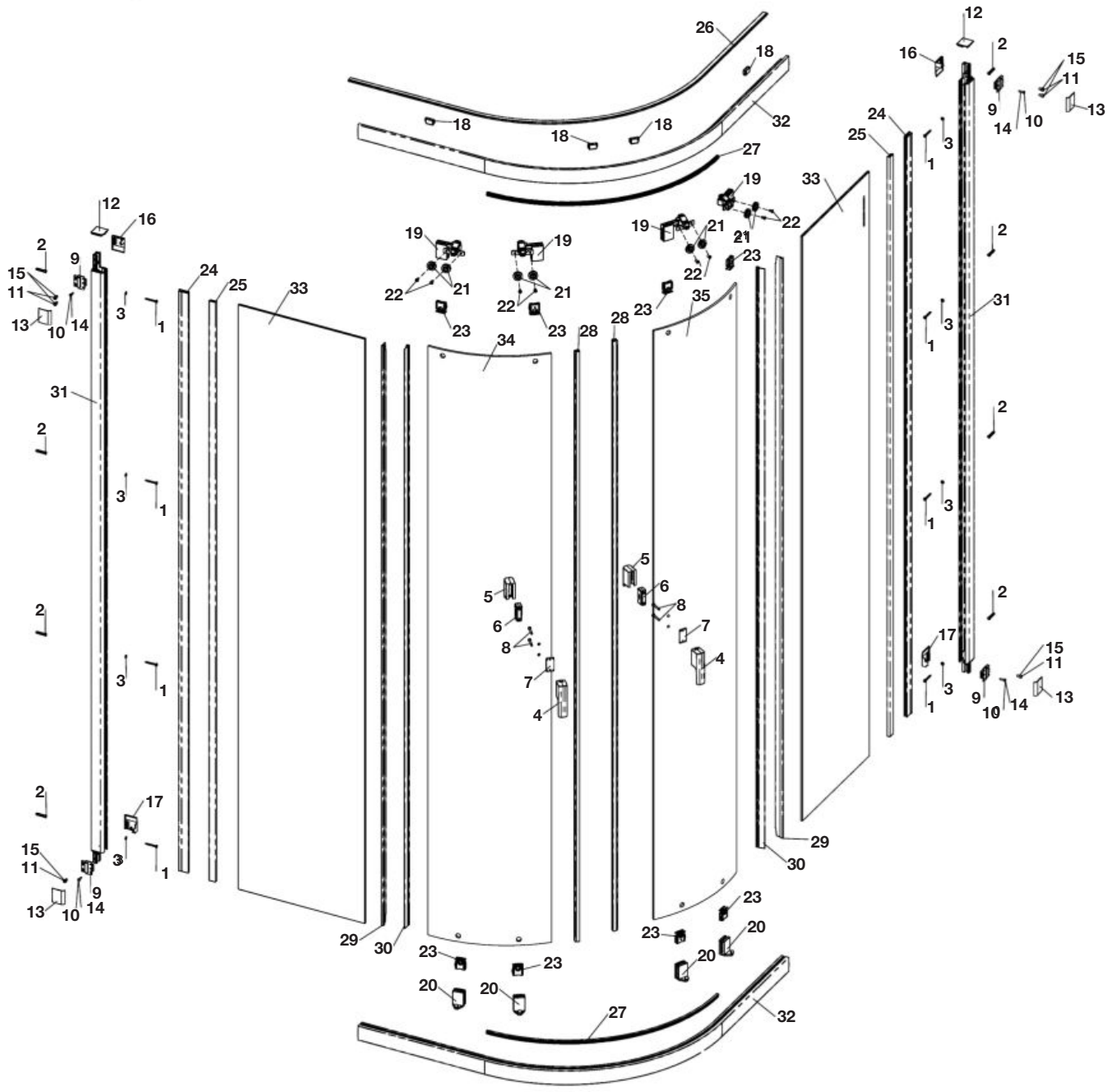

Easy Express

Easy MR (R550)

PB: Plata Brillo / Glossy silver
BL: Blanco / White
A: Anterior a Octubre 2013 / Before October 2013
B: Posterior a Octubre 2013 / After October 2013

					€
1	4 un	**AM99262900**			10,30
2	4 un				
3	4 un				
4		**AM99263002**	PB		48,60
5					
6					
7					
8	2 un				
4		**AM99263001**	BL		42,60
5					
6					
7					
8	2 un				
9	2 un	**AM99263100**			32,00
10	2 un				
11	4 un				
12	2 un	**AM99263200**			15,90
13	4 un	**AM99263302**	PB		27,10
		AM99263301	BL		7,44
14	6 un	**AM99263400**			18,50
15	6 un				
16	2 un	**AM99263502**	PB		28,10
17	2 un				
16	2 un	**AM99263501**	BL		7,44
17	2 un				

				€
18		**AM99263600**		18,40
19	2 un	**AM99341402**	PB	57,70
		AM99286401	BL	70,10
20	2 un	**AM99286602**	PB	19,60
		AM99286601	BL	21,00
21		**AM99264100**		7,13
22				
23	4 un	**AM99264200**	(B)*	12,50
24		**AM99266300**	2000 mm	35,40
25		**AM99266400**	2000 mm	34,90
26		**AM99266500**		54,40
27	2 un			
28		**AM99266600**	2000 mm	36,80
29	2 un	**AM99286800**		40,00
30	2 un			
31		**AM99267502**	PB	122,00
		AM99267501	BL	88,10
32		**AM99278302**	800 - PB	186,00
		AM99278301	800 - BL	N.D.
		AM99278402	900 - PB	-
		AM99278401	900 - BL	N.D.
33		**AM99278510**	1878 x 0231 x 6	-
		AM99278910	1878 x 0331 x 6	-
34		**AM99286110**	800, 900	124,00
35		**AM99286210**	800, 900	-

Easy Express

Easy PE

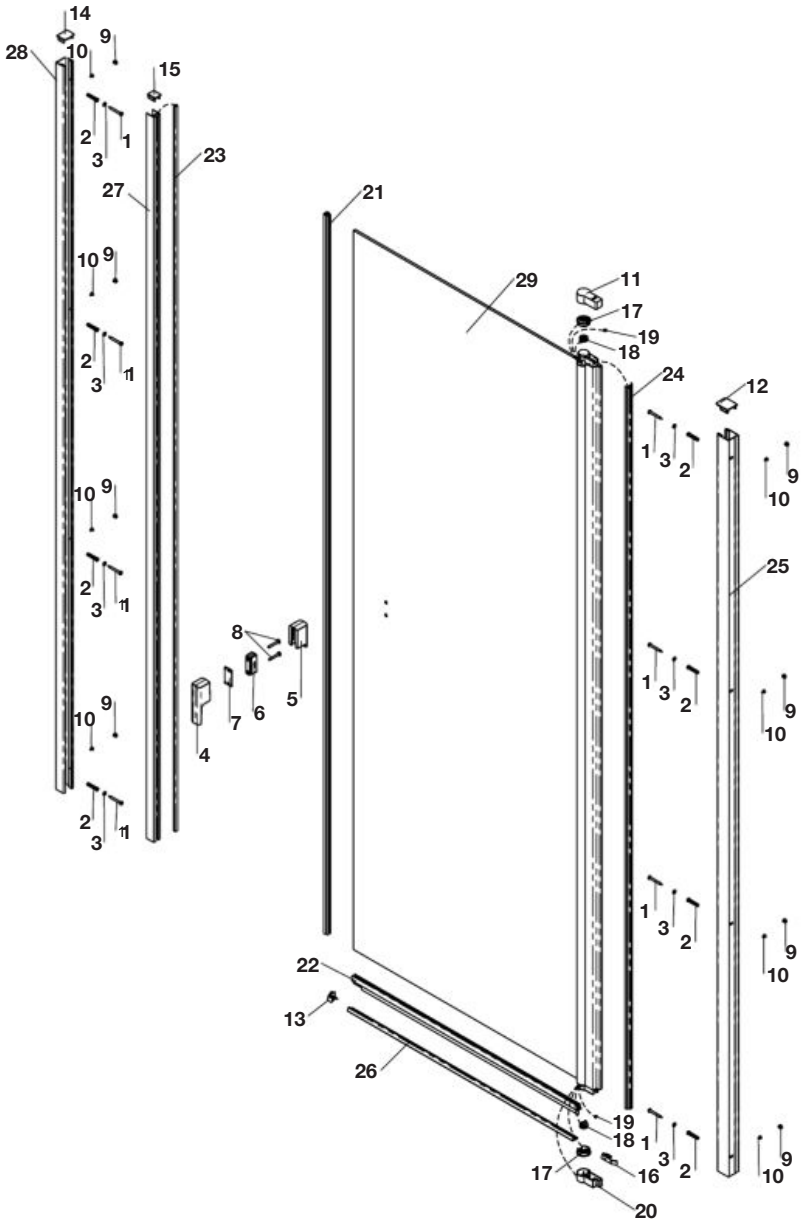

PB: Plata Brillo / Glossy silver
BL: Blanco / White

				€
1	4 un			
2	4 un	**AM99262900**		10,30
3	4 un			
4				
5				
6		**AM99263002**	PB	48,60
7				
8	2 un			
4				
5				
6		**AM99263001**	BL	42,60
7				
8	2 un			
9	4 un	**AM99265000**		37,30
10	4 un			
11		**AM99265102**	PB	14,00
12				

				€
11		**AM99265101**	BL	9,86
12				
13	2 un			
14		**AM99265202**	PB	14,20
15				
13	2 un			
14		**AM99265201**	BL	9,31
15				
16	2 un	**AM99265302**	PB	27,30
		AM99265301	BL	13,60
17				
18		**AM99265400**		11,60
19				
20	2 un	**AM99266202**	PB	16,30
		AM99266201	BL	9,41
21		**AM99266600**	2000 mm	36,80
22		**AM99267000**	998 mm	20,60

				€
23		**AM99267200**	1950 mm	28,10
24		**AM99267300**	2200 mm	29,40
25		**AM99268702**	PB	67,90
		AM99268701	BL	114,00
26		**AM99268902**	PB	38,60
		AM99268901	BL	22,00
27		**AM99269102**	PB	59,10
		AM99269101	BL	N.D.
28		**AM99269202**	PB	55,40
		AM99269201	BL	N.D.
29		**AM99284912**	1950 x 0690 - PB	N.D.
		AM99284911	1950 x 0690 - BL	N.D.
		AM99285112	1950 x 0790 - PB	N.D.
		AM99285111	1950 x 0790 - BL	N.D.
		AM99285312	1950 x 0890 - PB	-
		AM99285311	1950 x 0890 - BL	N.D.

Easy Express

Easy PL

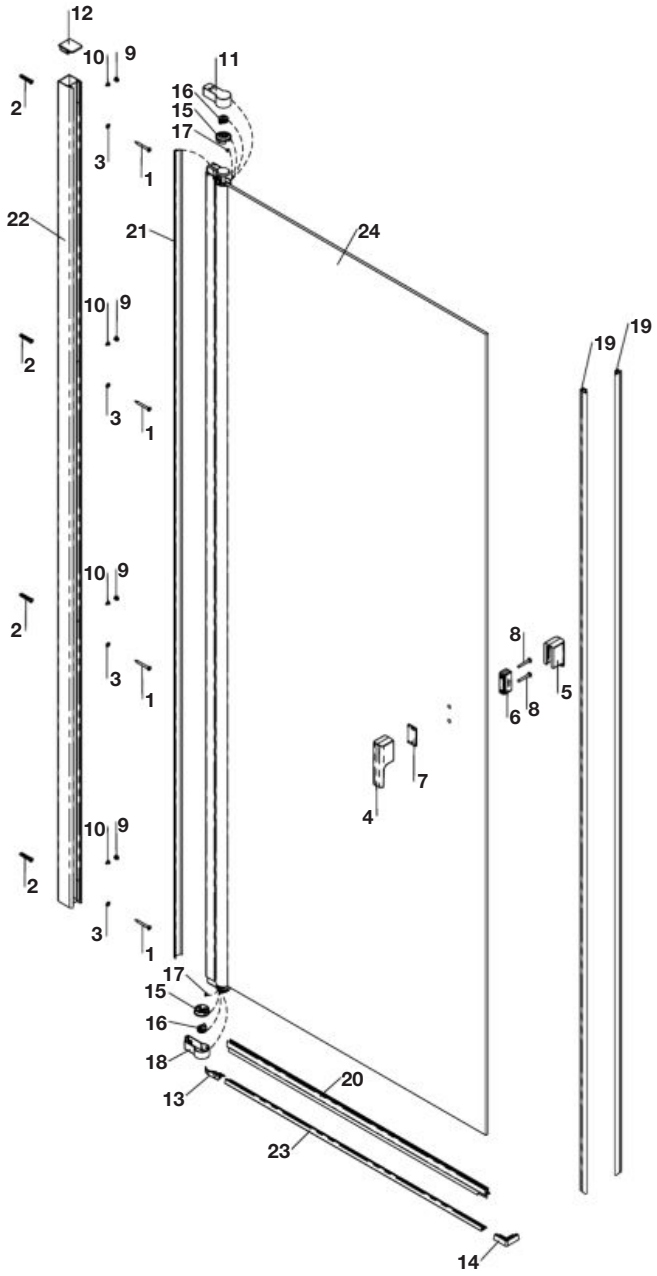

PB: Plata Brillo / Glossy silver
BL: Blanco / White

				€
1	4 un			
2	4 un	**AM99262900**		10,30
3	4 un			
4				
5				
6		**AM99263002**	PB	48,60
7				
8	2 un			
4				
5				
6		**AM99263001**	BL	42,60
7				
8	2 un			
9	4 un	**AM99265000**		37,30
10	4 un			

				€
11		**AM99265102**	PB	14,00
12				
11		**AM99265101**	BL	9,86
12				
13	2 un	**AM99265302**	PB	27,30
14				
13	2 un	**AM99265301**	BL	13,60
14				
15				
16		**AM99265400**		11,60
17				
18	2 un	**AM99266202**	PB	16,30
		AM99266201	BL	9,41
19	2 un	**AM99288400**	2000 mm	20,40
20		**AM99267000**	998 mm	20,60

				€
21		**AM99267300**	2200 mm	29,40
22		**AM99268702**	PB	67,90
		AM99268701	BL	114,00
23		**AM99268902**	PB	38,60
		AM99268901	BL	22,00
24		**AM99284812**	1950 x 0595 - PB	-
		AM99284811	1950 x 0595 - BL	N.D.
		AM99285012	1950 x 0695 - PB	N.D.
		AM99285011	1950 x 0695 - BL	N.D.
		AM99285212	1950 x 0795 - PB	-
		AM99285211	1950 x 0795 - BL	N.D.
		AM99285412	1950 x 0895 - PB	-
		AM99285411	1950 x 0895 - BL	N.D.

Easy Express

Easy LF

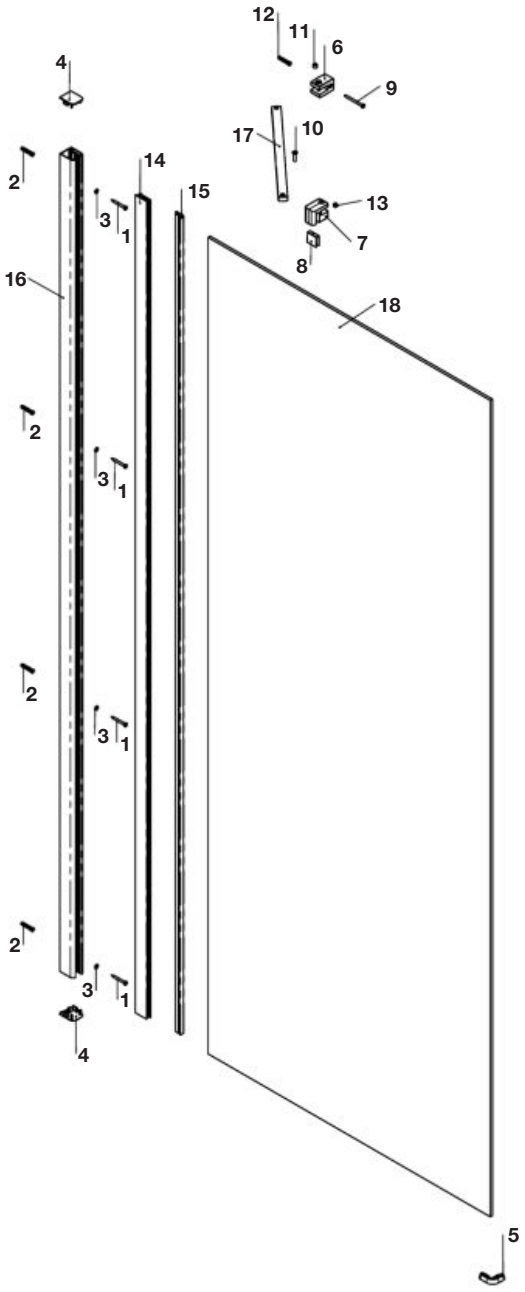

PB: Plata Brillo / Glossy silver
BL: Blanco / White

					€
1	4 un				
2	4 un	**AM99262900**			10,30
3	4 un				
4	2 un	**AM99264800**			11,30
5	2 un	**AM99265502**	PB		4,03
		AM99265501	BL		8,79
6	10 un	**AM99265602**	PB		35,70
7					
8					
9					
10					
11					
12					
13					

					€
6	10 un	**AM99265601**	BL		29,60
7					
8					
9					
10					
11					
12					
13					
14		**AM99266300**	2000 mm		35,40
15		**AM99266400**	2000 mm		34,90
16		**AM99268102**	PB		83,00
		AM99268101	BL		N.D.
17		**AM99269502**	1000 mm - PB		27,00
		AM99269501	1000 mm - BL		22,10

				€
18	**AM99281610**	1920 x 0650 x 6		-
	AM99281710	1920 x 0750 x 6		-
	AM99281810	1920 x 0850 x 6		-
	AM99281910	1920 x 0950 x 6		N.D.

Easy Express

Easy BF

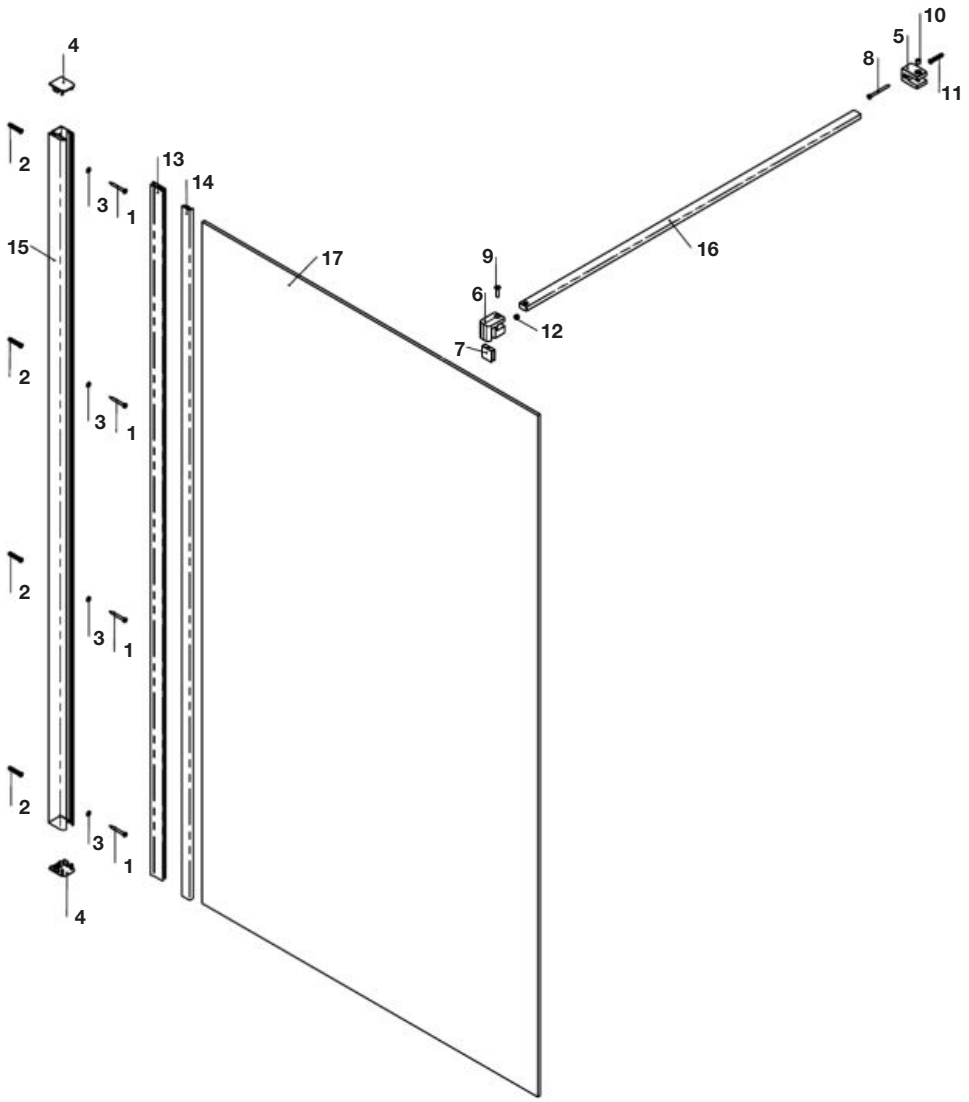

PB: Plata Brillo / Glossy silver
BL: Blanco / White

				€
1	4 un			
2	4 un	**AM99262900**		10,30
3	4 un			
4	2 un	**AM99264800**		11,30
5				
6				
7				
8				
9	2 un	**AM99265602**	PB	35,70
10				
11				
12				

				€
5				
6				
7				
8		**AM99265601**	BL	29,60
9	2 un			
10				
11				
12				
13		**AM99266300**	2000 mm	35,40
14		**AM99266400**	2000 mm	34,90
15		**AM99268002**	PB	52,00
		AM99268001	BL	N.D.
16		**AM99269502**	1000 mm - PB	27,00
		AM99269501	1000 mm - BL	22,10
17		**AM99282610**	1498 x 0836 x 6	-
		AM99282710	1498 x 1096 x 6	-

Easy Express

Easy B1H

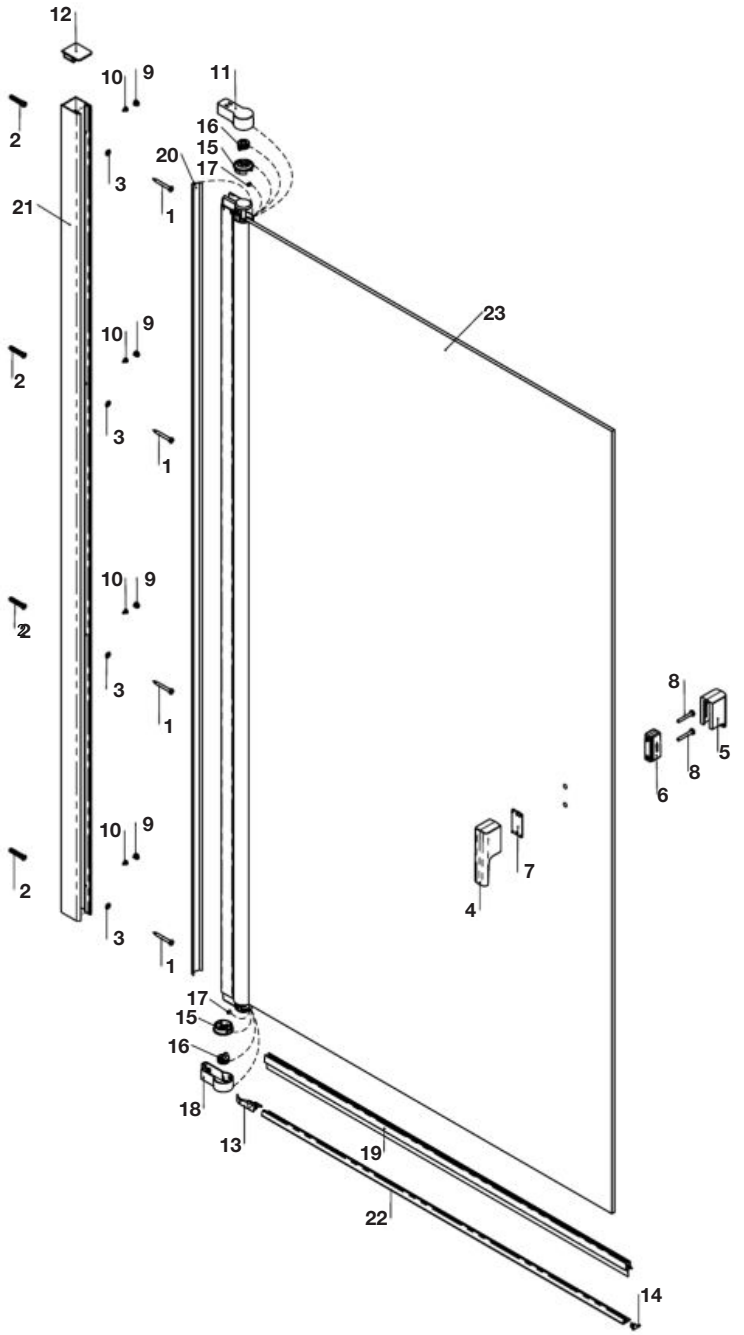

PB: Plata Brillo / Glossy silver
BL: Blanco / White

					€
1	4 un	**AM99262900**			10,30
2	4 un				
3	4 un				
4		**AM99263002**	PB		48,60
5					
6					
7					
8	2 un				
4		**AM99263001**	BL		42,60
5					
6					
7					
8	2 un				

				€
9	4 un	**AM99265000**		37,30
10	4 un			
11		**AM99265102**	PB	14,00
12				
11		**AM99265101**	BL	9,86
12				
13	2 un	**AM99265302**	PB	27,30
14	2 un			
13	2 un	**AM99265301**	BL	13,60
14	2 un			
15		**AM99265400**		11,60
16				
17				

				€
18	2 un	**AM99266202**	PB	16,30
		AM99266201	BL	9,41
19		**AM99267000**	998 mm	20,60
20		**AM99267300**	2200 mm	29,40
21		**AM99268802**	PB	73,10
		AM99268801	BL	97,40
22		**AM99268902**	PB	38,60
		AM99268901	BL	22,00
23		**AM99285612**	1500 x 0638 - PB	-
		AM99285611	1500 x 0638 - BL	N.D.
		AM99285712	1500 x 0788 - PB	-
		AM99285711	1500 x 0788 - BL	N.D.

Easy Express

Easy B1HF

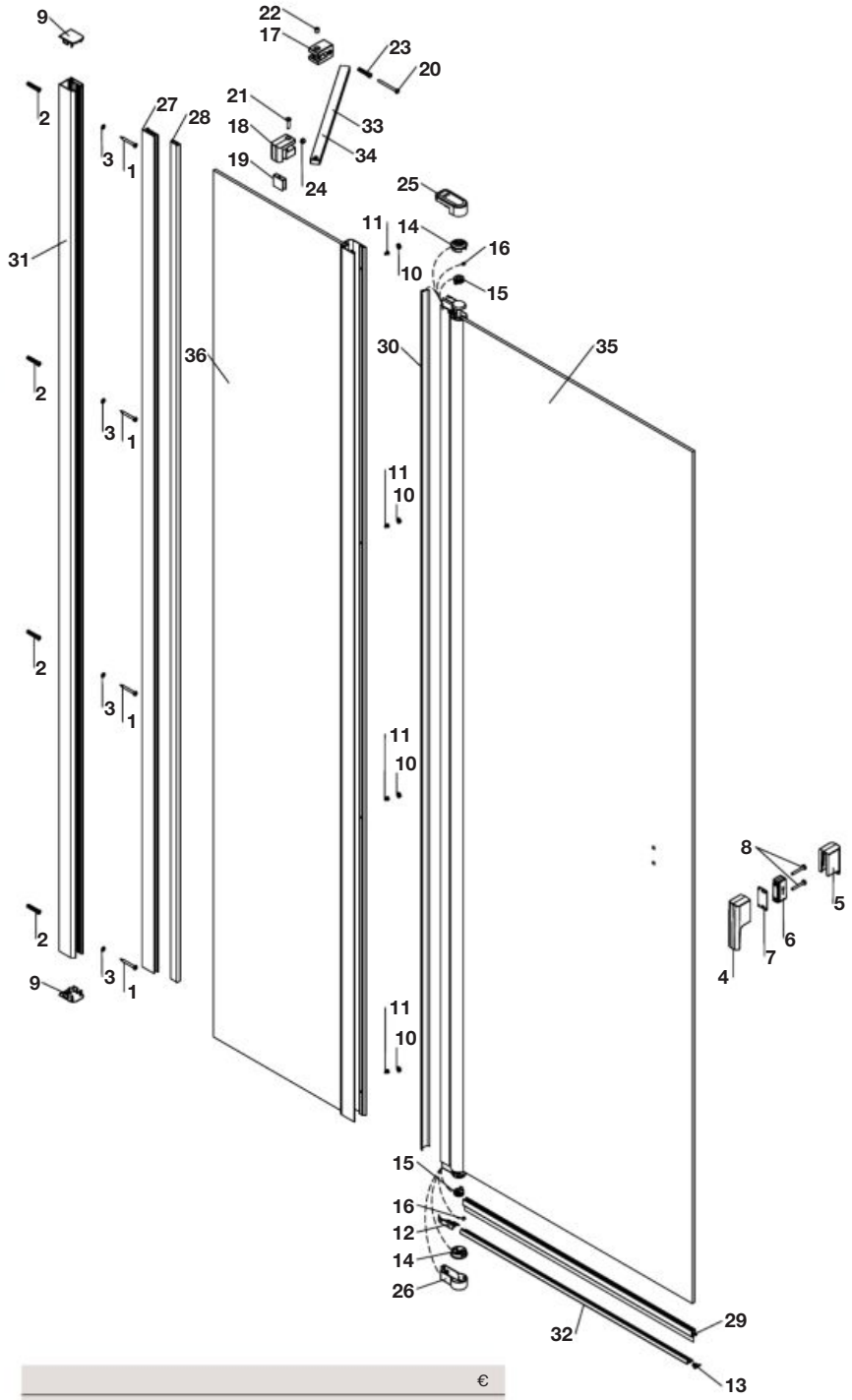

PB: Plata Brillo / Glossy silver
BL: Blanco / White

				€
1	4 un			
2	4 un	**AM99262900**		10,30
3	4 un			
4				
5				
6		**AM99263002**	PB	48,60
7				
8	2 un			
4				
5				
6		**AM99263001**	BL	42,60
7				
8	2 un			
9	2 un	**AM99264800**		11,30
10	4 un	**AM99265000**		37,30
11	4 un			
12	2 un	**AM99265302**	PB	27,30
13	2 un			
12	2 un	**AM99265301**	BL	13,60
13	2 un			
14				
15		**AM99265400**		11,60
16				
17				
18				
19				
20		**AM99265602**	PB	35,70
21	2 un			
22				
23				
24				
17				
18				
19				
20		**AM99265601**	BL	29,60
21	2 un			
22				
23				
24				
25		**AM99265702**	PB	14,00
		AM99265701	BL	10,10
26	2 un	**AM99266202**	PB	16,30
		AM99266201	BL	9,41
27		**AM99266300**	2000 mm	35,40
28		**AM99236400**	2000 mm	-
29		**AM99267000**	998 mm	20,60

			€
30	**AM99267300**	2200 mm	29,40
31	**AM99268302**	PB	62,40
	AM99268301	BL	N.D.
32	**AM99268902**	PB	38,60
	AM99268901	BL	22,00
33	**AM99269302**	350 mm - PB	11,50
	AM99269301	350 mm - BL	18,30
34	**AM99269402**	200 mm - PB	8,56
	AM99269401	200 mm - BL	N.D.
35	**AM99285512**	1500 x 0600 - PB	434,00
	AM99285511	1500 x 0600 - BL	N.D.
36	**AM99285812**	PB	396,00
	AM99285811	BL	N.D.

Perfiles suplementarios
Supplementary frames

Perfil suplementario / Supplementary frame

	Medidas (mm) / Dimensions (mm)	Colección / Collection	Acabado / Finish			
			Blanco / White	Negro mate / Matt black	Plata brillo / Glossy silver	Plata mate / Matt silver
AM3492000.	15 x 2000	Brisa, Naray*, Ura, Victoria Plus	-	59,50	54,20	-
AM1511950.	15 x 1950	Ura (anterior 2025)	-	-	52,00	-
AM1961950.	30 x 1950	Victoria (anterior 2025)	-	-	49,30	-

*Solo para lateral LF-C / Only for LF-C side

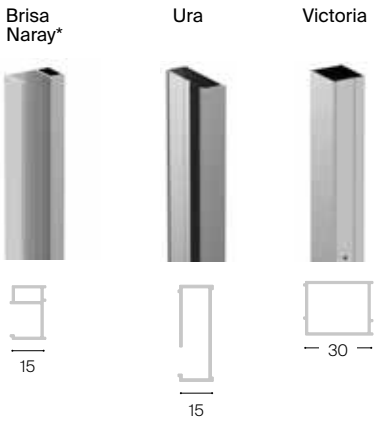

Perfil suplementario lateral / Side supplementary frame

	Medidas (mm) / Dimensions (mm)	Colección / Collection	Acabado / Finish			
			Blanco / White	Negro mate / Matt black	Plata brillo / Glossy silver	Plata mate / Matt silver
AM9900680.	40 x 40 x 2500	Todas las colecciones All collections	109,00	133,00	121,00	109,00

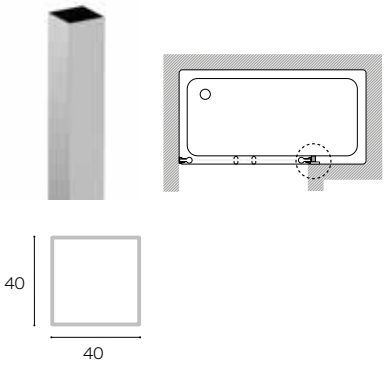

Perfil suplementario angular / Angular supplementary frame

	Medidas (mm) / Dimensions (mm)	Colección / Collection	Acabado / Finish			
			Blanco / White	Negro mate / Matt black	Plata brillo / Glossy silver	Plata mate / Matt silver
AM9900650.	32 x 15 x 2500	Todas las colecciones All collections	44,30	54,20	49,20	44,30
AM9900660.	40 x 20 x 2500		57,20	69,80	63,50	57,20
AM9900670.	30 x 30 x 2500		57,20	69,80	63,50	57,20

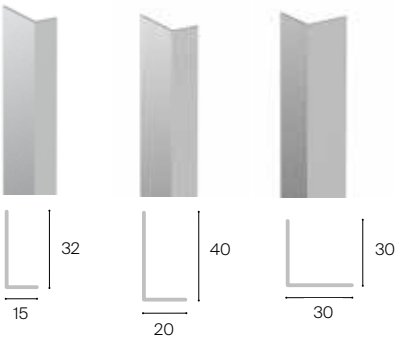

Perfil suplementario horizontal y vertical de nivelación / Horizontal and vertical leveling supplementary frame

	Medidas (mm) / Dimensions (mm)	Colección / Collection	Acabado / Finish			
			Blanco / White	Negro mate / Matt black	Plata brillo / Glossy silver	Plata mate / Matt silver
AM9900590.	20 x 2 x 2500	Todas las colecciones All collections	22,40	23,00	30,00	23,10
AM9900600.	40 x 4 x 2500		45,40	49,90	44,10	44,10
AM9900610.	40 x 10 x 2500		36,70	43,10	45,70	43,70
AM9900620.	40 x 20 x 2500		32,30	65,60	38,60	32,10
AM9900630.	40 x 40 x 2500		60,00	185,00	168,00	152 00
AM9900640.	60 x 40 x 2500		190,00	230,00	210,00	190,00

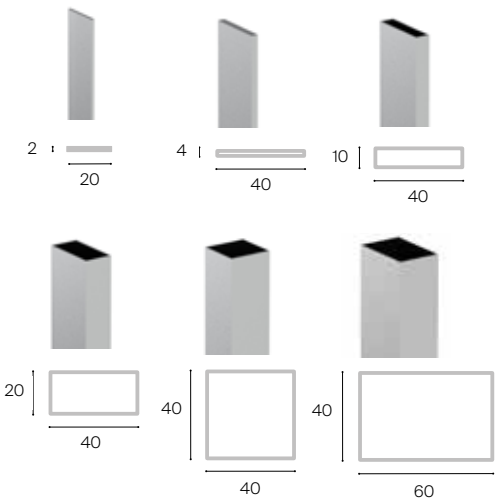

Acabados perfiles mamparas:
Bathtub screen frame finishes

Sustituir (.) de la referencia por el código del acabado del perfil elegido:
In the product reference replace Y with the code for the selected finish code

1 **Blanco /** White
2 **Plata brillo /** Glossy silver
3 **Plata mate /** Matt silver
6 **Negro mate cepillado /** Matt black brushed

Medidas en mm /
Dimensions in mm

Colecciones de baño /
Bathroom collections


ONA


TURA

162	**W+W**
163	**Armani / Casa - Colección Baia /** Armani / Casa - Baia Collection
168	**Armani / Casa - Colección Island /** Armani / Casa - Island Collection
171	**Armani / Casa - Colección Island (Old) /** Armani / Casa - Island Collection (Old)
172	**Beyond**
184	**Carmen (Old)**
189	**Hall**
190	**Inspira**
193	**Inspira Square / Round**
194	**Inspira (Old)**
197	**Meridian In-Tank**
199	**In-Wash® Insignia + In-Tank®**
202	**In-Wash® Inspira + In-Tank®**
203	**In-Wash® Inspira**
205	**In-Wash® Ona**
208	**Multiclean®**
210	**Dama-N**
221	**Ona**
233	**Delta**
235	**The Gap**
247	**The Gap Original**
260	**Debba**
271	**Debba Compact**
274	**Victoria-N**
278	**Victoria (Old)**
283	**Victoria**
290	**Victoria Original**
291	**Victoria Basic**
295	**Tura**
303	**Amberes**
304	**Khroma**
305	**Barcelona**
306	**Mecanismos universales /** Universal mechanisms
313	**Fijaciones y otros recambios /** Fixations and other spare parts
315	**Pulsadores, tiradores, fijaciones y juntas /** Push buttons, pull handles, fixations and gaskets
318	**Recambios originales /** Original spare parts
319	**Inspira Square / Round**
320	**Dama-N**
321	**Ona**
323	**The Gap Square**
327	**The Gap Round**
328	**Debba Square**
329	**Debba Round**
330	**Victoria**
331	**Civic**
332	**Meridian-N**
334	**Tura**
335	**Otras series de asientos y tapas** / Other seats & covers series

W+W

Lavabo e inodoro dos en uno / Basin & WC two in one

A893020001

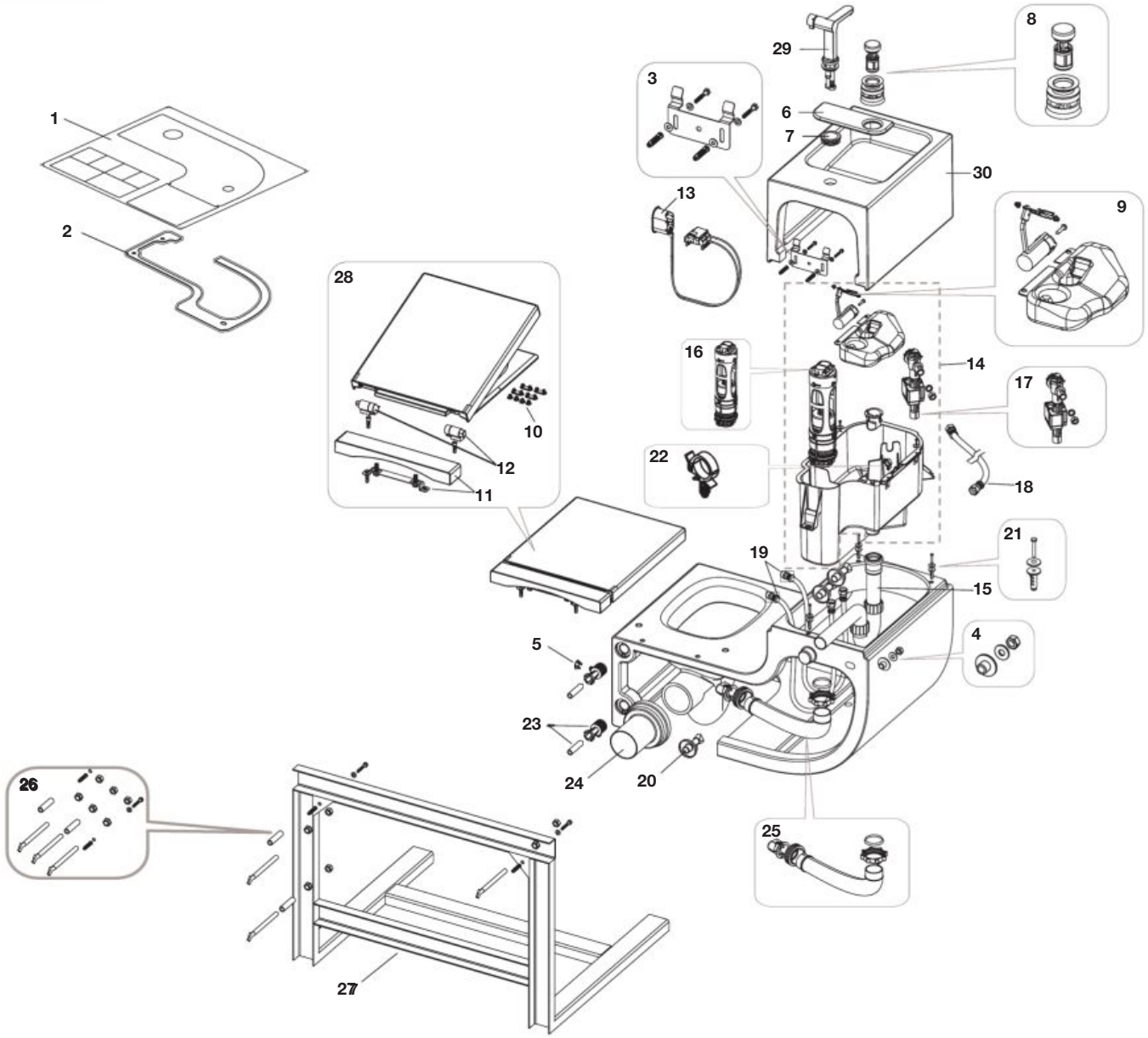

		€
1	**AV0000000R**	40,50
2	**AV0000100R**	57,50
3		
4	**A822097200**	18,40
5		
6	**A389702000**	249,00
7	**A822748100**	23,20
8	**A892020000**	291,00
9	**AV0000400R**	37,00

		€
10	**A802910880**	1,65
11	**A802910870**	81,80
12	**A802910860**	117,00
13	**A822034201**	111,00
14	**A822077500**	389,00
15		
15	**AV0000200R**	26,80
16	**AV0000300R**	11,50
17	**A82209630R**	32,90

			€
18		**A525011407**	17,00
19	2 un	**A525011507**	27,30
20	3 un	**AG0078200R**	30,90
5			
21	3 un	**A82276430R**	22,20
22			
23		**A822039100**	48,70
24		**AV0012400R**	34,80
25		**A892022000**	26,90

		€
26	**A822039800**	25,80
26	**A822091100**	249,00
27		
28	**A801702004**	213,00
29	**A5A3036C00**	N.D.
30	**AV0000600R**	-

Armani / Casa - Colección Baia / Armani / Casa - Baia Collection

Lavabo encimera resina / Resin countertop washbasin

A3270CE000	1100 x 520 mm
A3270C1000	900 x 420 mm

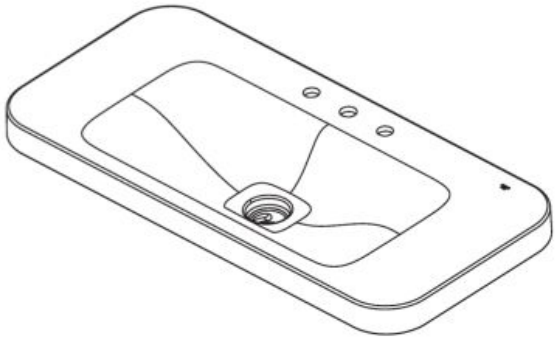

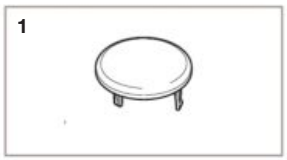

Sustituir (..) de la referencia de producto por el código de color elegido:
In the product reference replace (..) with the code for the selected finish code:
00 Glossy White
91 Off White
R3 Greige
R4 Dark metallic

1	**AV0056200R**	60,00

Lavabo mural o con pedestal / Wall or pedestal washbasin

A3270C8..0	1 orificio / 1 hole
A3270C8..3	3 orificios / 3 holes

Admite (no incluido) / Admits (not included)

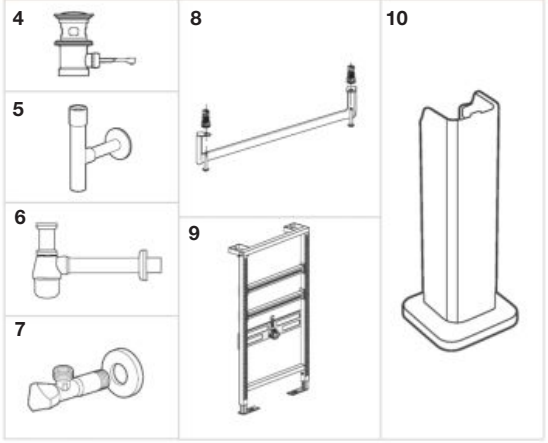

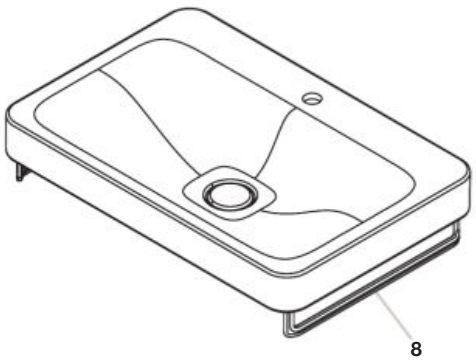



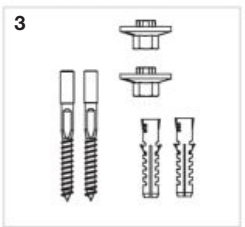

Sustituir (..) de la referencia de producto por el código de color elegido:
In the product reference replace (..) with the code for the selected finish code:
00 Glossy White
91 Off White
R3 Greige
R4 Dark metallic
R7 Shagreen Dark metallic

		€
2	**AV0041900R**	89,70
	AV0041991R	102,00
	AV00419R3R	100,00
	AV00419R4R	79,10
	AV00419R7R	22,10

		€
3	**AV0007500R**	5,51

Admite (no incluido) /
Admits (not included)

			€
4	**AG0075400R**	Gama Alta / High-range	33,80
	AG0075300R	Gama Media / Mid-range	28,80
	AG0075200R	Plástico / Plastic	16,80
	A505402407	Cerámico / Ceramic	86,00
5	**A506403110**	Sifón totem / Totem trap	-
	A506403810	Sifón minimal / Minimal trap	111,00
6	**A506401614**		30,30
7	**A525164400**	1/2-3/8	-
8	**A8164470..**		-
9	**A890093000**		-
10	**A3370C0..0**		

Armani / Casa - Colección Baia /
Armani / Casa - Baia Collection

Mueble base de dos cajones con lavabo / Two drawers vanity unit with washbasin

A851368...

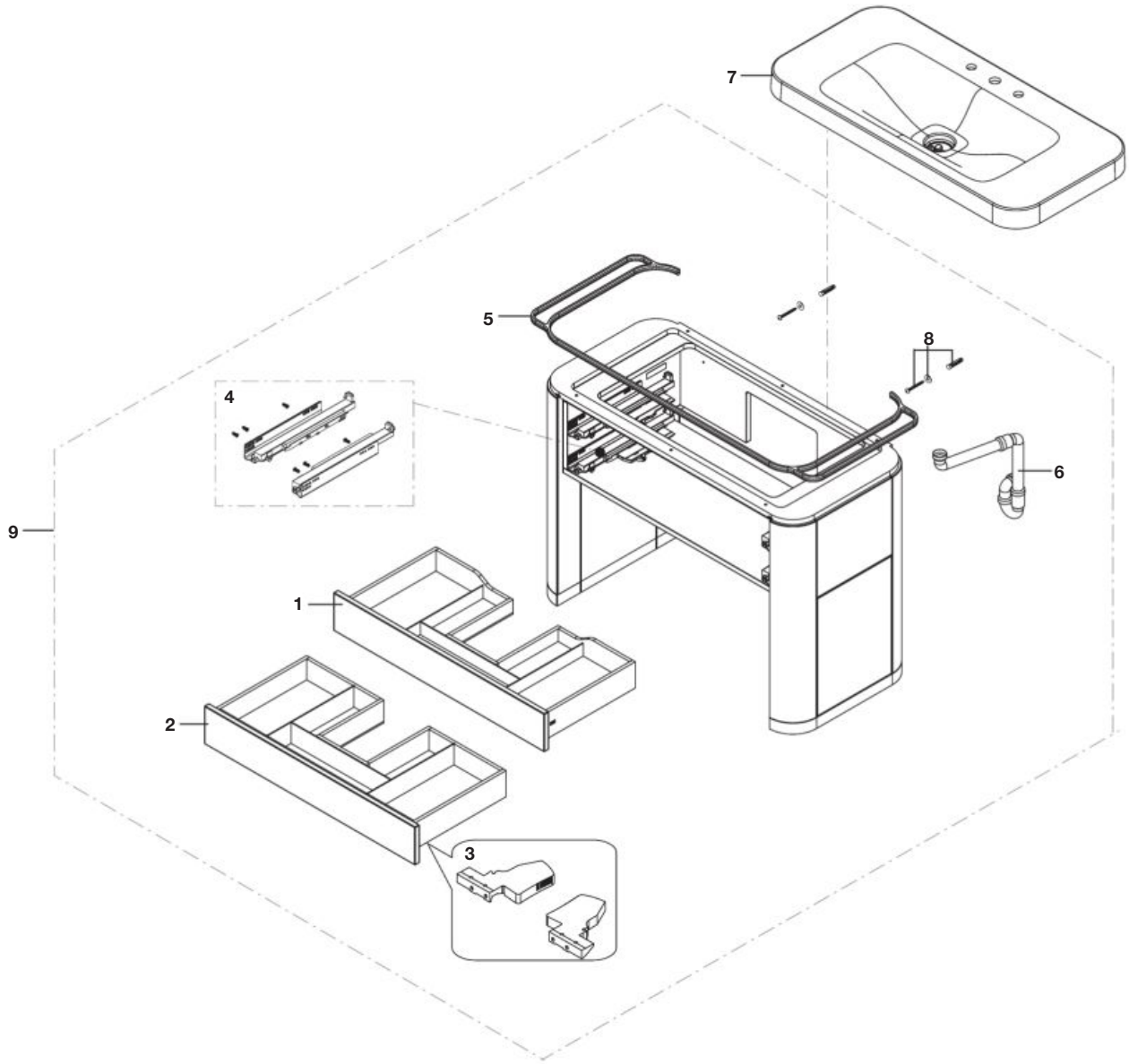

Sustituir (..) de la referencia de producto por el código de color elegido:
In the product reference replace (..) with the code for the selected finish code:

Producto Product	Recambio Spare Part	Acabado Finished
430	91	Off White
429	GO	Greige Roble / Oak greige

			€
1		**AU0081091R**	-
		AU00810GOR	-
2		**AU0081191R**	-
		AU00811GOR	-
3		**AU0081200R**	66,00

			€
4		**AU0081300R**	-
5		**AU0081400R**	-
6		**AU0028600R**	20,50
8		**AU0081500R**	33,20

Producto acabado compatible:
Finished compatible product:

		€
7	**A3270CE000**	-
9	**A857208...**	-

Armani / Casa - Colección Baia /
Armani / Casa - Baia Collection

Inodoro de tanque bajo adosado / WC with low tank back to the wall

A3420C7..0	Taza / Bowl
A3410C0..0	Tanque / Cistern

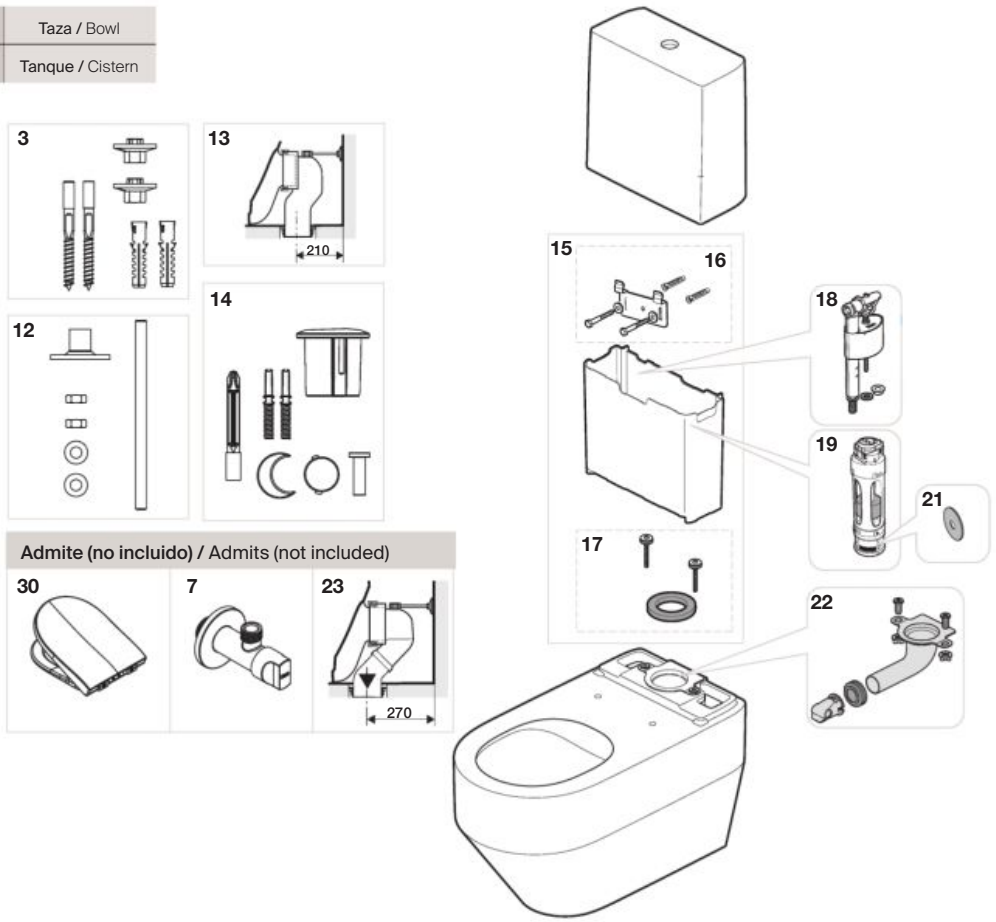

Inodoro suspendido Rimless / Wall-hung WC pan Rimless

A3460C7..0

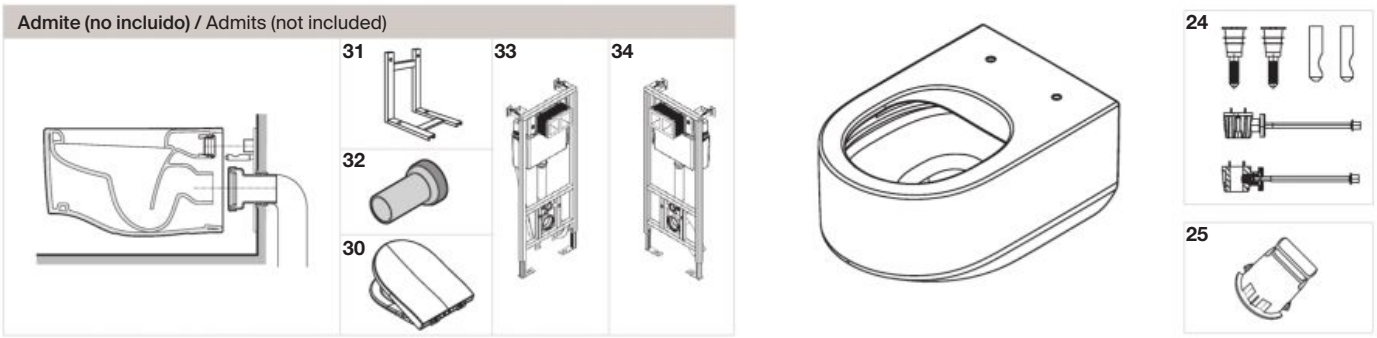

Sustituir (..) de la referencia de producto por el código de color elegido:
In the product reference replace (..) with the code for the selected finish code:

00 Blanco / White
91 Off White
R3 Greige
R4 Dark Metallic

Otros acabados:
Other finishes:

00 Cromado / Chromed
VC Greige
VS Acero Pulido / Polished steel

		€
3	**AV0007500R**	5,51
12	**AV0035400R**	4,80
13	**AV0007900R**	14,60
14	**AH0001800R**	13,30
	AH00018VSR	41,90
	AH00018VCR	41,90
15	**AV0038100R**	38,60
16	**AV0038000R**	15,30

		€
17	**AV0036000R**	10,20
18	**A822508900**	-
19	**AH0000100R**	35,10
21	**AH0001400R**	8,28
22	**AV0037700R**	17,70
24	**AV0043900R**	38,80
25	**AV0034100R**	3,58

Admite (no incluido)
Admits (not included)

		€
7	**A525164400**	-
23	**AV0007700R**	14,60
30	**A801C32..B**	-
31	**A822091001**	133,00
32	**AV0007800R**	8,11
33	**A890090400**	-
34	**A890090800**	N.D.

Armani / Casa - Colección Baia /
Armani / Casa - Baia Collection

Asiento y tapa inodoro / Toilet seat and cover

A801C32..B

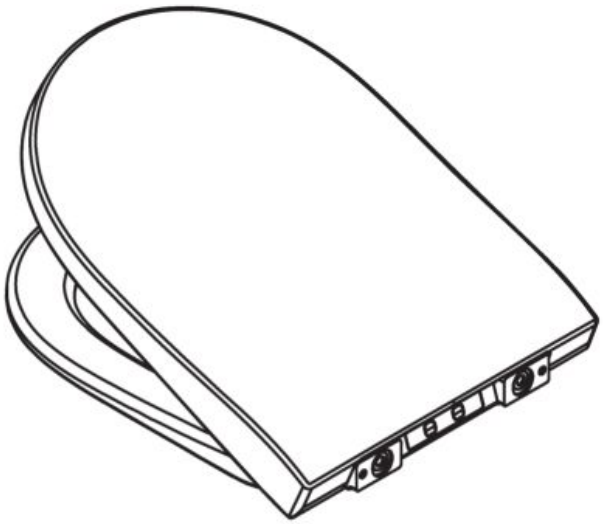

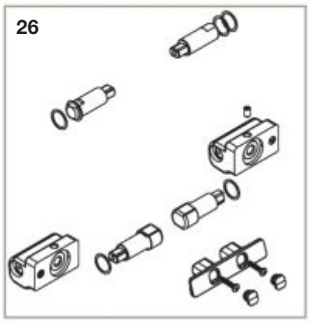

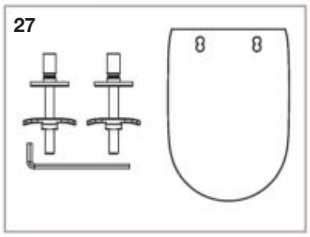





Sustituir (..) de la referencia de producto por el código de color elegido:
In the product reference replace (..) with the code for the selected finish code:

00 White
91 Off White
R3 Greige
R4 Dark Metallic

		€
26	**AI0020100R**	88,30
	AI0020191R	88,30
	AI00201R3R	88,30
	AI00201R4R	96,50

		€
27	**AI0020000R**	12,50
28	**AI0009100R**	1,25
29	**AI0000200R**	0,98

Armani / Casa - Colección Baia /
Armani / Casa - Baia Collection

Bidé suspendido uno y tres orificios / Wall-hung bidet one and three holes

A3570C5..0	1 orificio / 1 hole
A3570C6..0	3 orificio / 3 holes

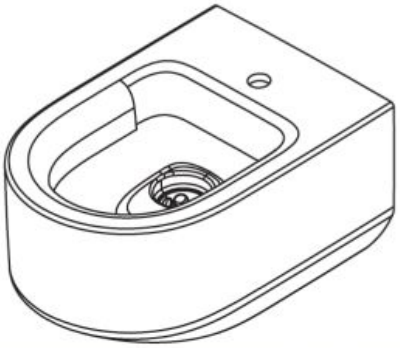



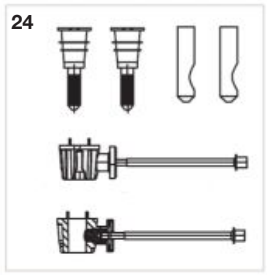

Admite (no incluido) / Admits (not included)

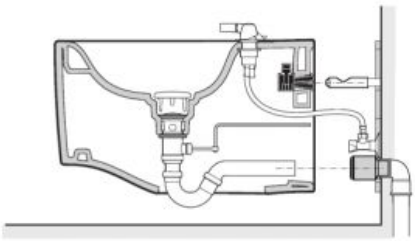

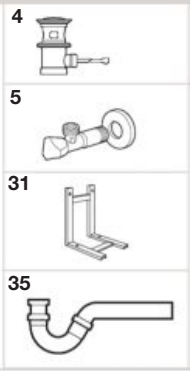

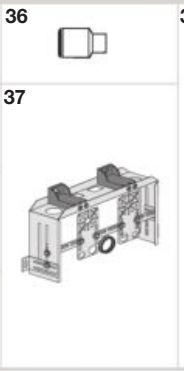

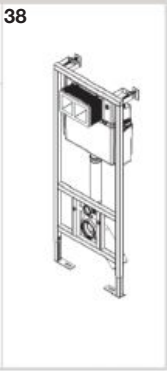

Sustituir (..) de la referencia de producto por el código de color elegido:
In the product reference replace (..) with the code for the selected finish code:

00 Blanco / White
91 Off White
R3 Greige
R4 Dark Metallic

Toallero y pedestal / Towel rail and pedestal

A816447..

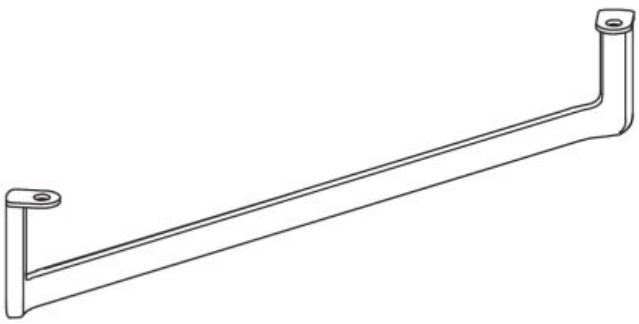

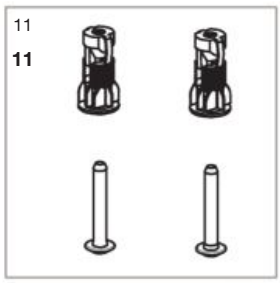

Sustituir (..) de la referencia de producto por el código de color elegido:
In the product reference replace (..) with the code for the selected finish code:

00 Blanco / White
91 Off White
R3 Greige
R4 Dark Metallic
R7 Shagreen Dark Metallic

Admite (no incluido)
Admits (not included)

		€
2	**AV0041900R**	89,70
	AV0041991R	102,00
	AV00419R3R	100,00
	AV00419R4R	79,10
	AV00419R7R	22,10
11	**AV0045600R**	36,30
24	**AV0043900R**	38,80

			€
4	**AG0075400R**	Gama Alta / High-range	33,80
	AG0075300R	Gama Media / Mid-range	28,80
	AG0075200R	Plástico / Plastic	16,80
	A505402407	Cerámico / Ceramic	86,00
5	**A525164400**		-
31	**A822091001**		133,00
35	**A506402210**		33,60

		€
36	**AV0013400R**	6,03
37	**A890091100**	-
38	**A890091200**	-

Armani / Casa - Colección Island / Armani / Casa - Island Collection

Lavabo de encimera / Countertop washbasin

A327760..0	770 x 550
A327761..0	650 x 550





Admite (no incluido) / Admits (not included)

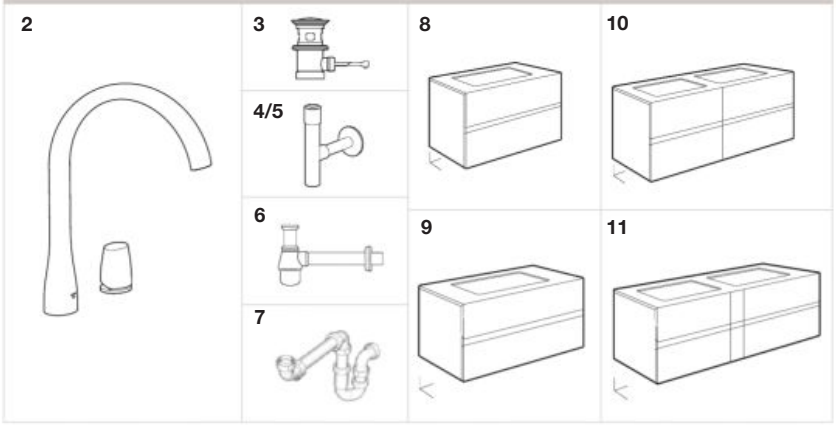

Lavabo de bajo encimera / Under countertop washbasin

A327762..0	610 x 420

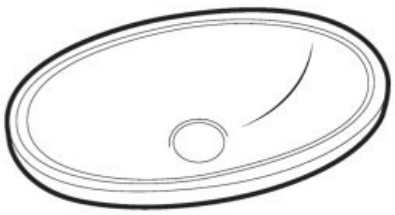



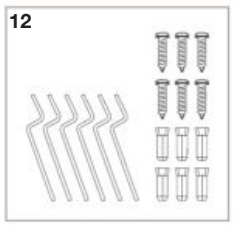

Sustituir (..) de la referencia de producto por el código de color elegido:
In the product reference replace (..) with the code for the selected finish code:

00 Blanco / White
91 Off White
R2 Shagreen T
R3 Greige
R5 Nero
R6 Shagreen

		€
1	**AV0008600R**	58,30
	AV0008691R	58,30
	AV00086R2R	51,50
	AV00086R3R	53,50
	AV00086R5R	51,50
	AV00086R6R	-
12	**AV0017400R**	4,50

Admite (no incluido)
Admits (not included)

			€
2	**A5A3876C00**	Chrome	-
	A5A3876VC0	Greige	-
	A5A3876VG0	Nero	-
3	**AG0007800R**		44,20
4	**A506403110**	Totem	-
5	**A506403810**	Minimal	111,00
6	**A506401614**		30,30
7	**A858B48000**		52,30
8	**A856538820**	Chrome	-
	A856538821	Greige	N.D.
	A856538819	Nero	N.D.

			€
9	**A856537820**	Chrome	-
	A856537821	Greige	-
	A856537819	Nero	-
10	**A856536820**	Chrome	N.D.
	A856536821	Greige	-
	A856536819	Nero	N.D.
11	**A856535820**	Chrome	-
	A856535821	Greige	-
	A856535819	Nero	-

Armani / Casa - Colección Island /
Armani / Casa - Island Collection

Inodoro suspendido / Wall-hung WC pan

A346767..0







Admite (no incluido) / Admits (not included)

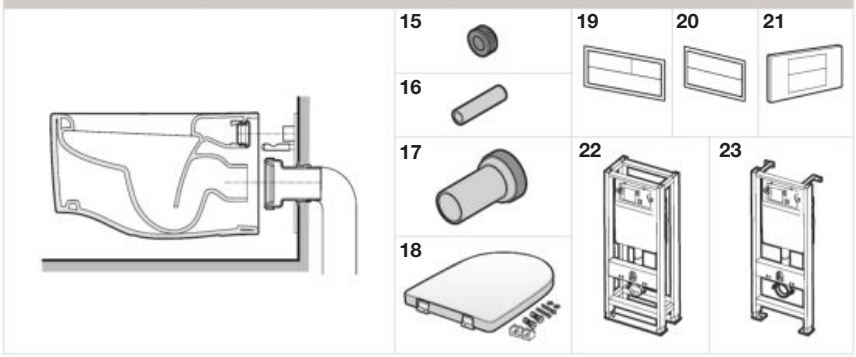

16: manguito D40 común / outlet D40 connector

Asiento y tapa inodoro / Toilet seat and cover

A801762..4

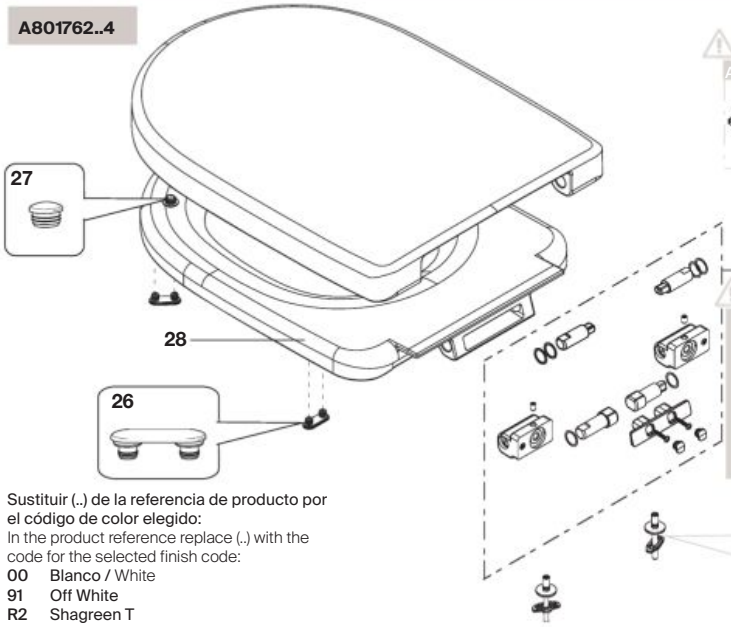

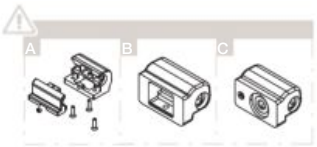

Tres versiones de bisagras: las del dibujo A, dibujo B y dibujo C.
Three versions of hinges: the one from drawing A, drawing B and drawing C.

Si tiene que cambiar la pieza 24 / If you need to change part 24:

Si tiene la bisagra como el dibujo A debe solicitar los recambios: If you have the hinges like drawing A you need to request spare parts:	Si tiene la bisagra como el dibujo B debe solicitar los recambios: If you have the hinges like drawing B you need to request spare parts:	Si tiene la bisagra como el dibujo C debe solicitar el recambio: If you have the hinges like drawing C you need to request spare parts:
24+25+26+28	24+25	24

Sustituir (..) de la referencia de producto por el código de color elegido:
In the product reference replace (..) with the code for the selected finish code:

00 Blanco / White
91 Off White
R2 Shagreen T
R3 Greige
R5 Nero
R6 Shagreen

			€
13	**AV0014400R**		21,50
14	**AV0014300R**		54,50
24	**AI00204..R**		-
25	**AI0020000R**		12,50
26	**AI0009100R**	4 un	1,25
27	**AI0000200R**	2 un	0,98
28	**AI00230..R**		-

Sólo se muestra el precio del acabado Blanco / Only the price of the White finish is shown

Admite (no incluido) / Admits (not included)

			€
15	**AV0016200R**		2,63
17	**AV0012400R**		34,80
18	**A801762..4**		-
19	**A816487039**	Nero	N.D.
	A816487040	Greige	N.D.
	A816487041	Silver	N.D.
20	**A816485039**	Nero	N.D.
	A816485041	Silver	N.D.

			€
21	**A890045000**	White	-
	A890045001	Chrome bril.	-
	A8900450R0	Chrome	N.D.
	A8900450R1	Silver	N.D.
	A8900450R3	Greige	N.D.
	A8900450R5	Nero	N.D.

Armani / Casa - Colección Island /
Armani / Casa - Island Collection

Bidé suspendido / Wall-hung bidet

A357765..0









Admite (no incluido) / Admits (not included)

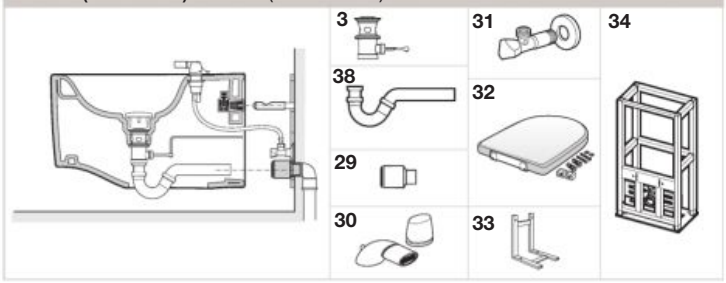

Tapa bidé suspendido / Bidet wall-hung cover

A806762..4

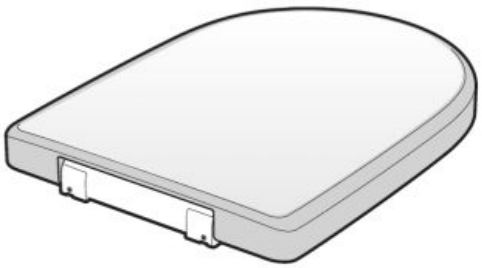





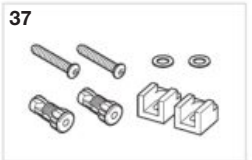

Sustituir (..) de la referencia de producto por el código de color elegido:
In the product reference replace (..) with the code for the selected finish code:

00 Blanco / White
91 Off White
R2 Shagreen T
R3 Greige
R5 Nero
R6 Shagreen

		€
1	**AV0008600R**	58,30
	AV0008691R	58,30
	AV00086R2R	51,50
	AV00086R3R	53,50
	AV00086R5R	51,50
	AV00086R6R	-
13	**AV0014400R**	21,50
14	**AV0014300R**	54,50
27	**AI0000200R**	0,98

		€
36	**AI0014200R**	311,00
	AI0014291R	155,00
	AI00142R2R	155,00
	AI00142R3R	155,00
	AI00142R5R	155,00
	AI00142R6R	155,00
37	**AI0012200R**	90,00

Admite (no incluido)
Admits (not included)

			€
3	**AG0007800R**		44,20
29	**AV0013400R**		6,03
30	**A5A6076C00**	Chrome	-
	A5A6076VC0	Greige	-
	A5A6076VG0	Nero	-
31	**AG0078200R**		30,90
32	**A806762..4**		-
33	**A822091001**		133,00
34	**A890041200**		N.D.
38	**A506402210**		33,60

Armani / Casa - Colección Island (Old) /
Armani / Casa - Island Collection (Old)

Columna de una puerta / One door column

A856720...	Apertura derecha / Right opening
A856721...	Apertura izquierda / Left opening

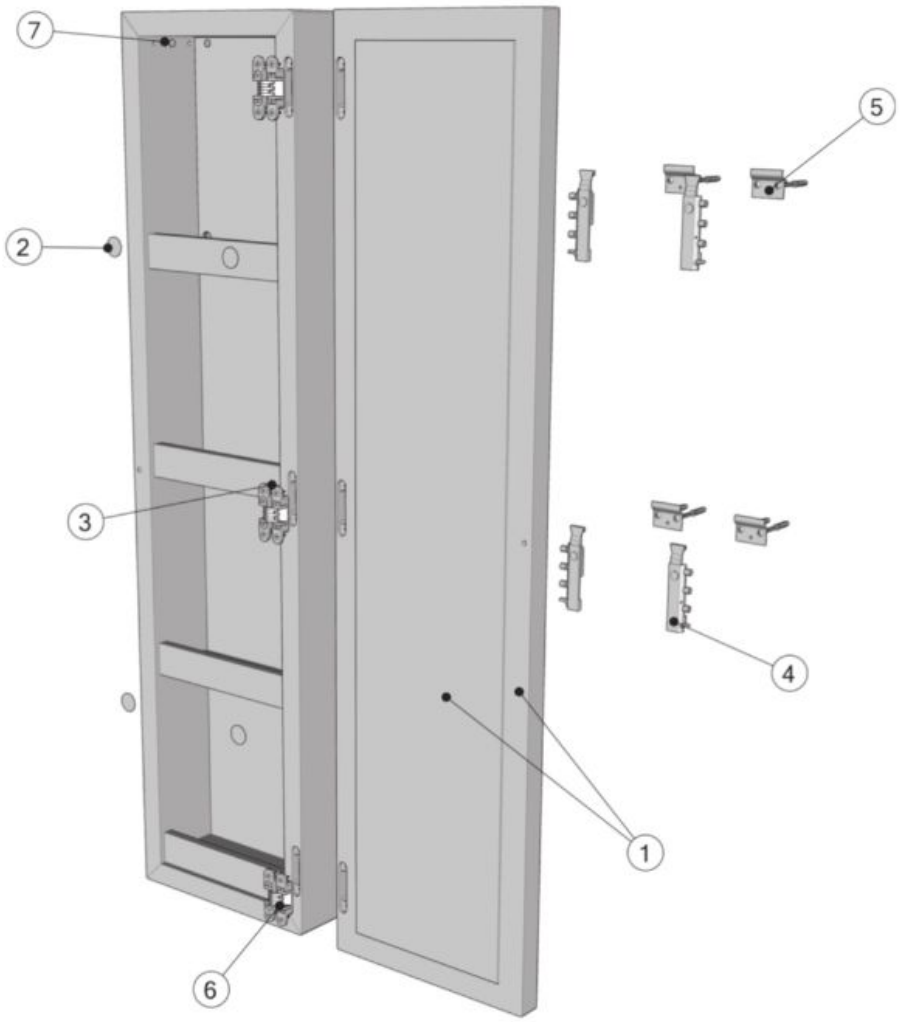

Las últimas posiciones de cada código, indican el acabado (color):
In the product reference replace (...) with the code for the selected finish code:
819 Metallic green lacado / Metallic green lacquered
820 Greige lacado / Greige lacquered
821 Nero lacado / Nero lacquered

			€
1		**A858F62819**	-
		A858F62820	-
		A858F62821	N.D.
2	4 un	**A858F74000**	14,70
3		**A858F75000**	17,20

			€
4		**A858B46000**	N.D.
5		**A858B25000**	10,50
6		**A858F61819**	46,70
		A858F61821	41,00

			€
7	4 un	**A858F63819**	-
		A858F63820	-
		A858F63821	-

Beyond

Mueble de dos cajones con lavabo Fineceramic® / Two drawers vanity unit with Finceramic® washbasin

A851356...	600 mm
A851357...	800 mm
A851358...	1000 mm

ADMITE* (no incluido)
ADMITS* (not included)

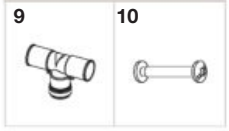

* ADMITE (no incluido) para series A851356... y A851358...
* Admits (not included) for series A851356... and A851358...

Las últimas posiciones de cada código, indican el acabado (color):
In the product reference replace (...) with the code for the selected finish code:
402 Roble City texturizado / City textured oak
806 Blanco Brillante / Bright white

			€
1	**AU00481402**	600 mm	165,00
	AU00481806		165,00
	AU00482402	800 mm	188,00
	AU00482806		188,00
	AU00483402	1000 mm	215,00
	AU00483806		215,00
2	**AU00484402**	600 mm	163,00
	AU00484806		163,00
	AU00485402	800 mm	127,00
	AU00485806		127,00
	AU00486402	1000 mm	116,00
	AU00486806		116,00

				€
3		**AU0048700R**		11,50
4		**AU0048800R**	350 mm	108,00
5		**AU0049000R**	600 mm	23,70
		AU0049100R	800 mm	24,80
		AU0049200R	1000 mm	25,80
6		**AU0013300R**		15,80
7		**AU0014100R**		44,90
8		**AU0049300R**		17,50
9		**AU0020800R**		7,68
10	4 un	**AU0016500R**		5,47
13		**A50640390C**		57,20
27		**AU0048900R**	400 mm	133,00

Producto acabado compatible:
Compatible finished products:

			€
11	**A857144...**	600 mm	-
	A857145...	800 mm	-
	A857146...	1000 mm	-
12	**A3270BC000**	600 mm	-
	A3270BB000	800 mm	-
	A3270BA000	1000 mm	-

Beyond

Mueble de una puerta / One door base unit

A857147...	400 mm

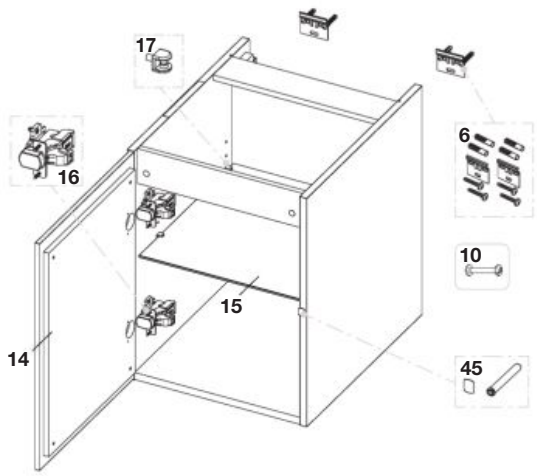

Columna de una puerta / One door column

A857237...	1400 mm

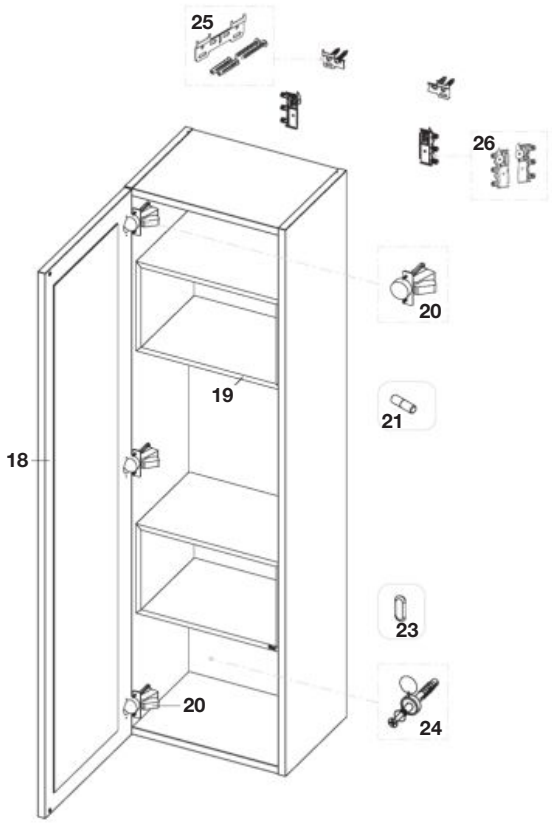

Las últimas posiciones de cada código, indican el acabado (color):
In the product reference replace (...) with the code for the selected finish code:
402 Roble City texturizado / City textured oak
806 Blanco Brillante / Bright white

			€
6		**AU0013300R**	15,80
10	4 un	**AU0016500R**	5,47
14		**AU00494402**	128,00
		AU00494806	128,00
15		**AU0049500R**	68,00
16	2 un	**AU0049600R**	44,50

			€
17	4 un	**AU0048000R**	3,60
18		**AU00497402**	48,70
		AU00497806	99,00
19		**AU0049800R**	58,70
20	3 un	**AU0042700R**	25,80
21	8 un	**AU0020000R**	15,00

			€
23	4 un	**AU0013700R**	16,30
26			
24		**AU0013800R**	12,10
25			
45		**AU0062300R**	11,90

Beyond

Mueble base de dos cajones con lavabo Surfex® / Two drawers vanity unit with Surfex® washbasin

A851389...		1000 mm
A851390...		1000 mm
A851391...		1200 mm
A851392...		1200 mm
A851393...		1400 mm
A851394...		1400 mm

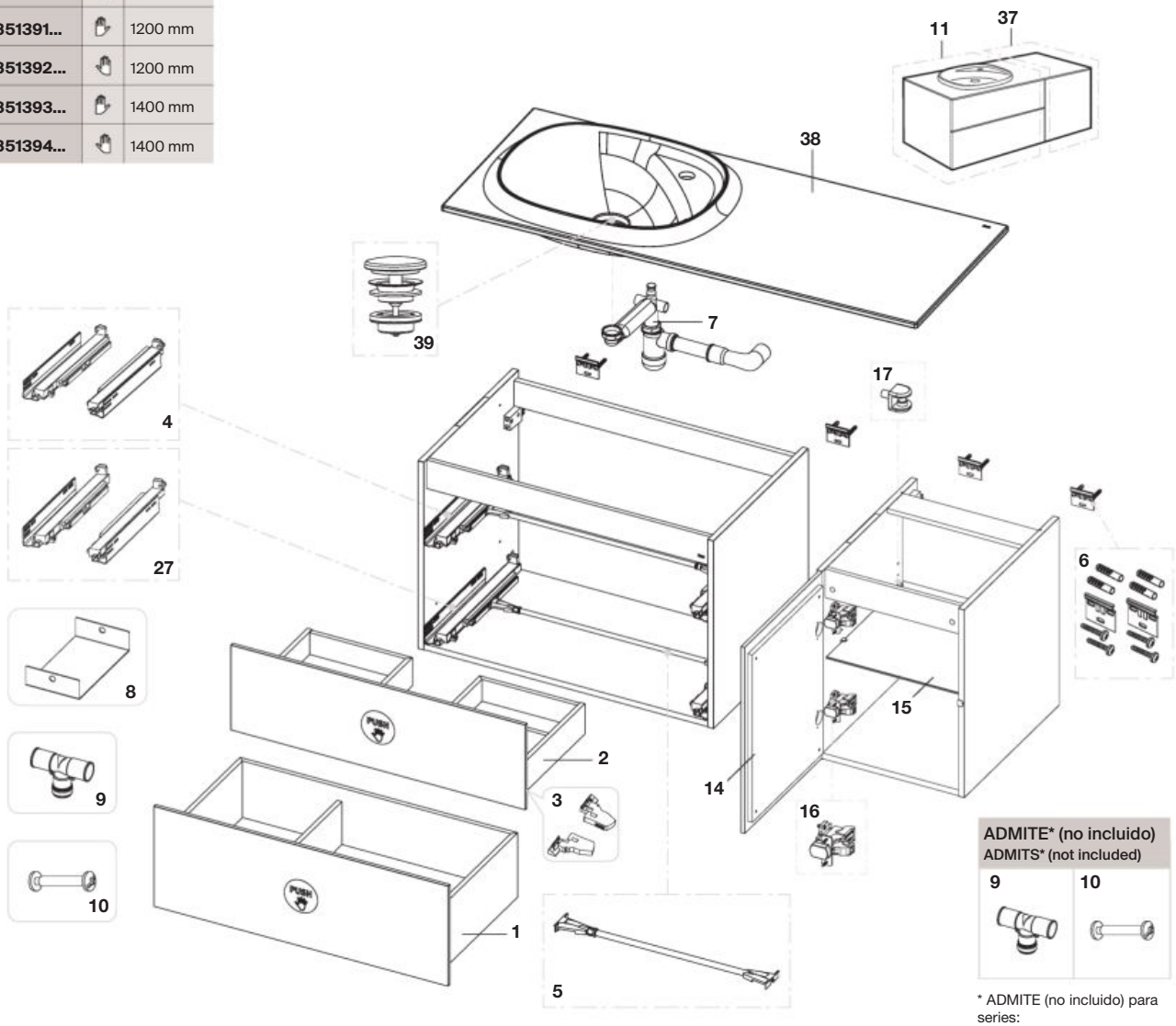

ADMITE* (no incluido)
ADMITS* (not included)

* ADMITE (no incluido) para series:
* ADMITS (not included) for series :
A851389... A851390...
A851393... A851394...

Las últimas posiciones de cada código, indican el acabado (color):
In the product reference replace (...) with the code for the selected finish code:
402 Roble City texturizado / City textured oak
806 Blanco Brillante / Bright white

				€
1		**AU00481402**	600 mm	165,00
		AU00481806		165,00
		AU00482402	800 mm	188,00
		AU00482806		188,00
		AU00483402	1000 mm	215,00
		AU00483806		215,00
2		**AU00484402**	600 mm	163,00
		AU00484806		163,00
		AU00485402	800 mm	127,00
		AU00485806		127,00
		AU00486402	1000 mm	116,00
		AU00486806		116,00
3		**AU0048700R**		11,50
4		**AU0048800R**	350 mm	108,00

				€
5		**AU0049000R**	600 mm	23,70
		AU0049100R	800 mm	24,80
		AU0049200R	1000 mm	25,80
6		**AU0013300R**		15,80
7		**AU0014100R**		44,90
8		**AU0049300R**		17,50
9		**AU0020800R**		7,68
10	4 un	**AU0016500R**		5,47
14		**AU00494402**		128,00
		AU00494806		128,00
15		**AU0049500R**		68,00
16	2 un	**AU0049600R**		44,50
17	4 un	**AU0048000R**		3,60
27		**AU0048900R**	400 mm	133,00
39		**AV0046200R**		303,00

Producto acabado compatible:
Compatible finished products:

				€
11	**A857144...**	600 mm		-
	A857145...	800 mm		-
	A857146...	1000 mm		-
37	**A857147...**	400 mm		-
38	**AW2113F012EB0000**	1000 mm		-
	AW2113F02C2B0000	1000 mm		-
	AW2114B8192B0000	1200 mm		-
	AW2114B8326B0000	1200 mm		-
	AW2115801F6B0000	1400 mm		-
	AW21158038AB0000	1400 mm		-

Beyond

Mueble base de dos cajones con lavabo doble de Surfex® / Two drawers vanity unit with double Surfex® washbasin

A851395...	1600 mm

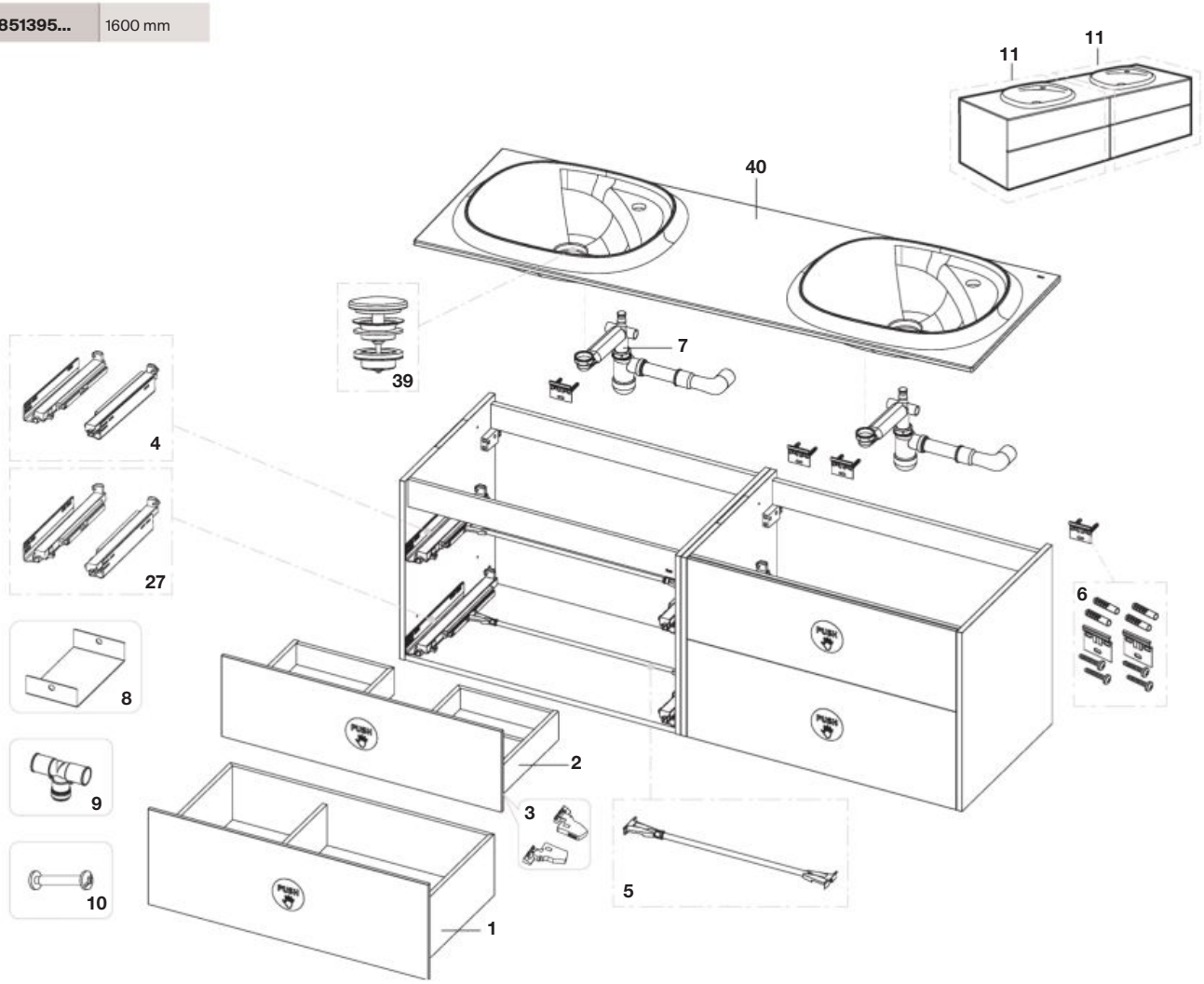

Las últimas posiciones de cada código, indican el acabado (color):
In the product reference replace (...) with the code for the selected finish code:
402 Roble City texturizado / City textured oak
806 Blanco Brillante / Bright white

			€
1	**AU00481402**	600 mm	165,00
	AU00481806		165,00
	AU00482402	800 mm	188,00
	AU00482806		188,00
	AU00483402	1000 mm	215,00
	AU00483806		215,00
2	**AU00484402**	600 mm	163,00
	AU00484806		163,00
	AU00485402	800 mm	127,00
	AU00485806		127,00
	AU00486402	1000 mm	116,00
	AU00486806		116,00

				€
3		**AU0048700R**		11,50
4		**AU0048800R**	350 mm	108,00
5		**AU0049000R**	600 mm	23,70
		AU0049100R	800 mm	24,80
		AU0049200R	1000 mm	25,80
6		**AU0013300R**		15,80
7		**AU0014100R**		44,90
8		**AU0049300R**		17,50
9		**AU0020800R**		7,68
10	4 un	**AU0016500R**		5,47
27		**AU0048900R**	400 mm	133,00
39		**AV0046200R**		303,00

Producto acabado compatible:
Compatible finished products:

			€
11	**A857145...**	800 mm	-
40	**AW221648324B0000**	1600 mm	-

Beyond

Mueble base de dos cajones con lavabo de sobre encimera / two drawers base unit with washbasin on countertop

A851396...		1000 mm	Lavabo 455 / Washbasin 455
A851397...		1000 mm	Lavabo 455 / Washbasin 455
A851398...		1200 mm	Lavabo 455 / Washbasin 455
A851399...		1200 mm	Lavabo 455 / Washbasin 455
A851400...		1200 mm	Lavabo 585 / Washbasin 585
A851401...		1200 mm	Lavabo 585 / Washbasin 585
A851402...		1400 mm	Lavabo 455 / Washbasin 455
A851403...		1400 mm	Lavabo 455 / Washbasin 455
A851404...		1400 mm	Lavabo 585 / Washbasin 585
A851405...		1400 mm	Lavabo 585 / Washbasin 585

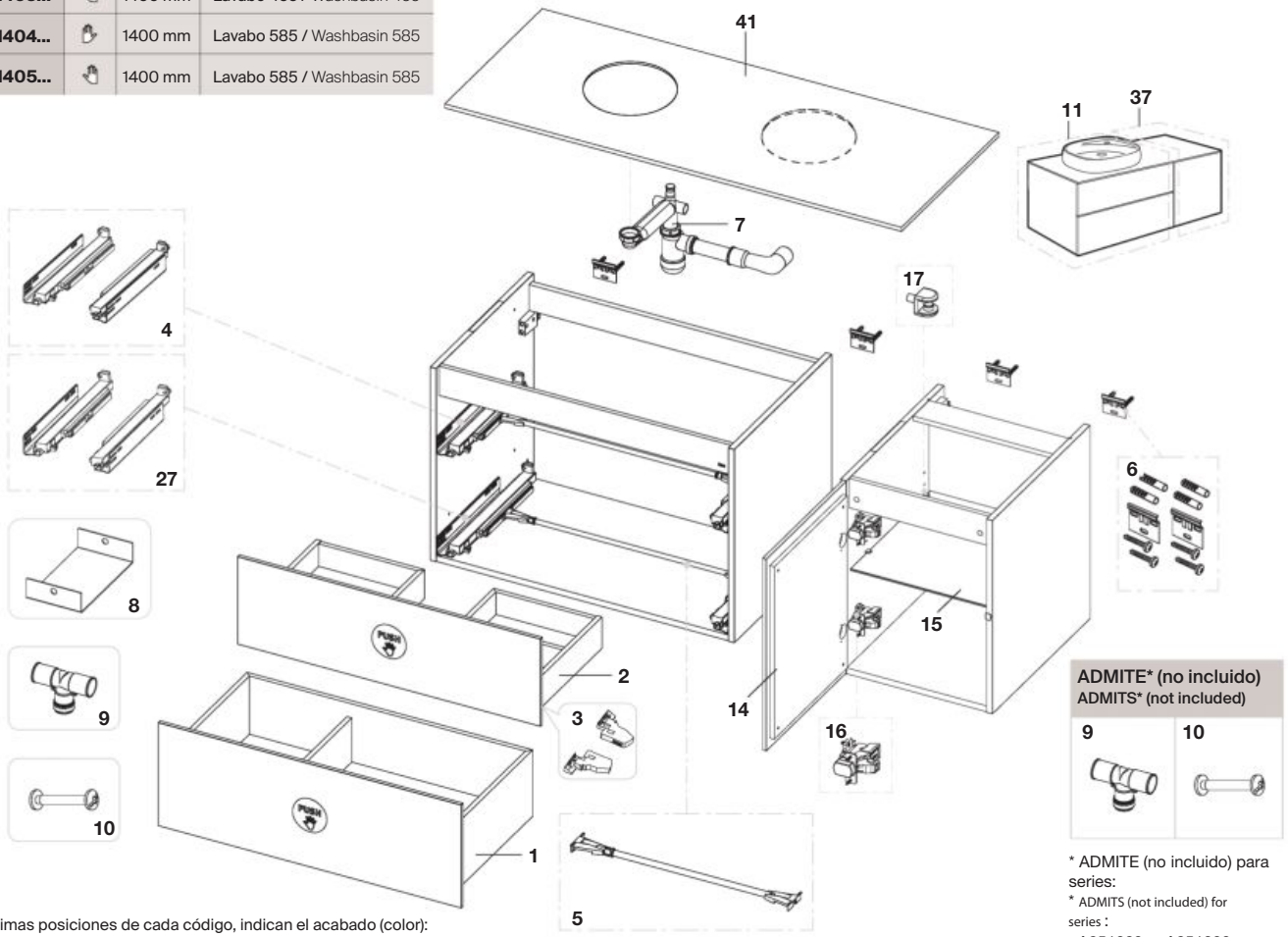

ADMITE* (no incluido)
ADMITS* (not included)

* ADMITE (no incluido) para series:
* ADMITS (not included) for series :
A851389... A851390...
A851393... A851394...

Las últimas posiciones de cada código, indican el acabado (color):
In the product reference replace (...) with the code for the selected finish code:
402 Roble City texturizado / City textured oak
806 Blanco Brillante / Bright white

				€
1		**AU00481402**	600 mm	165,00
		AU00481806		165,00
		AU00482402	800 mm	188,00
		AU00482806		188,00
		AU00483402	1000 mm	215,00
		AU00483806		215,00
2		**AU00484402**	600 mm	163,00
		AU00484806		163,00
		AU00485402	800 mm	127,00
		AU00485806		127,00
		AU00486402	1000 mm	116,00
		AU00486806		116,00
3		**AU0048700R**		11,50
4		**AU0048800R**	350 mm	108,00

				€
5		**AU0049000R**	600 mm	23,70
		AU0049100R	800 mm	24,80
		AU0049200R	1000 mm	25,80
6		**AU0013300R**		15,80
7		**AU0014100R**		44,90
8		**AU0049300R**		17,50
9		**AU0020800R**		7,68
10	4 un	**AU0016500R**		5,47
14		**AU00494402**		128,00
		AU00494806		128,00
15		**AU0049500R**		68,00
16	2 un	**AU0049600R**		44,50
17	4 un	**AU0048000R**		3,60
27		**AU0048900R**	400 mm	133,00

Producto acabado compatible:
Compatible finished products:

					€
11	**A857144...**	600 mm			-
	A857145...	800 mm			-
	A857146...	1000 mm			-
37	**A857147...**	400 mm			-
41	**A857242432**	1000 mm		Lavabo 455	-
	A857243432	1000 mm		Lavabo 455	-
	A857246432	1200 mm		Lavabo 455	-
	A857247432	1200 mm		Lavabo 455	-
	A857248432	1200 mm		Lavabo 585	-
	A857249432	1200 mm		Lavabo 585	-
	A857254432	1400 mm		Lavabo 455	-
	A857255432	1400 mm		Lavabo 455	-
	A857256432	1400 mm		Lavabo 585	-
	A857257432	1400 mm		Lavabo 585	-

Beyond

Mueble base de dos cajones con lavabo doble de sobre encimera /
two drawers base unit with double washbasin on countertop

A851406...	1600 mm	Lavabo 455 / Washbasin 455
A851407...	1600 mm	Lavabo 585 / Washbasin 585

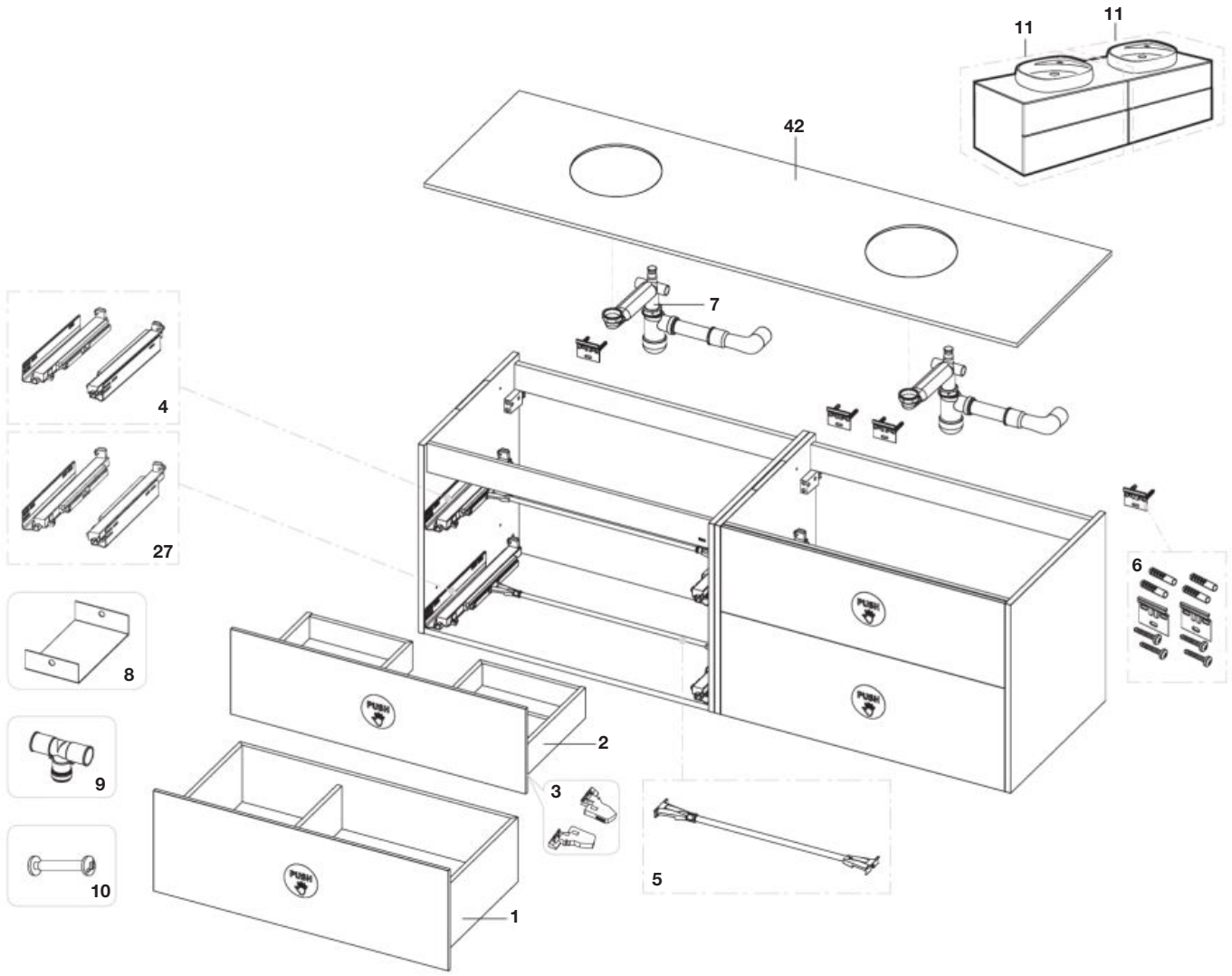

Las últimas posiciones de cada código, indican el acabado (color):
In the product reference replace (...) with the code for the selected finish code:
402 Roble City texturizado / City textured oak
806 Blanco Brillante / Bright white

			€
1	**AU00481402**	600 mm	165,00
	AU00481806		165,00
	AU00482402	800 mm	188,00
	AU00482806		188,00
	AU00483402	1000 mm	215,00
	AU00483806		215,00
2	**AU00484402**	600 mm	163,00
	AU00484806		163,00
	AU00485402	800 mm	127,00
	AU00485806		127,00
	AU00486402	1000 mm	116,00
	AU00486806		116,00

				€
3		**AU0048700R**		11,50
4		**AU0048800R**	350 mm	108,00
5		**AU0049000R**	600 mm	23,70
		AU0049100R	800 mm	24,80
		AU0049200R	1000 mm	25,80
6		**AU0013300R**		15,80
7		**AU0014100R**		44,90
8		**AU0049300R**		17,50
9		**AU0020800R**		7,68
10	4 un	**AU0016500R**		5,47
27		**AU0048900R**	400 mm	133,00

Producto acabado compatible:
Compatible finished products:

				€
11	**A857145...**	800 mm		-
42	**A857262432**	1600 mm	Lavabo 455	-
	A857263432	1600 mm	Lavabo 585	-

Beyond

Mueble base de dos cajones con lavabo de sobre encimera / Two drawers vanity unit with over contertop washbasin

A851408...		1000 mm	Lavabo 455 / Washbasin 455
A851409...		1000 mm	Lavabo 455 / Washbasin 455
A851410...		1200 mm	Lavabo 455 / Washbasin 455
A851411...		1200 mm	Lavabo 455 / Washbasin 455
A851412...		1200 mm	Lavabo 585 / Washbasin 585
A851413...		1200 mm	Lavabo 585 / Washbasin 585
A851414...		1400 mm	Lavabo 455 / Washbasin 585
A851415...		1400 mm	Lavabo 455 / Washbasin 585
A851416...		1400 mm	Lavabo 585 / Washbasin 585
A851417...		1400 mm	Lavabo 585 / Washbasin 585

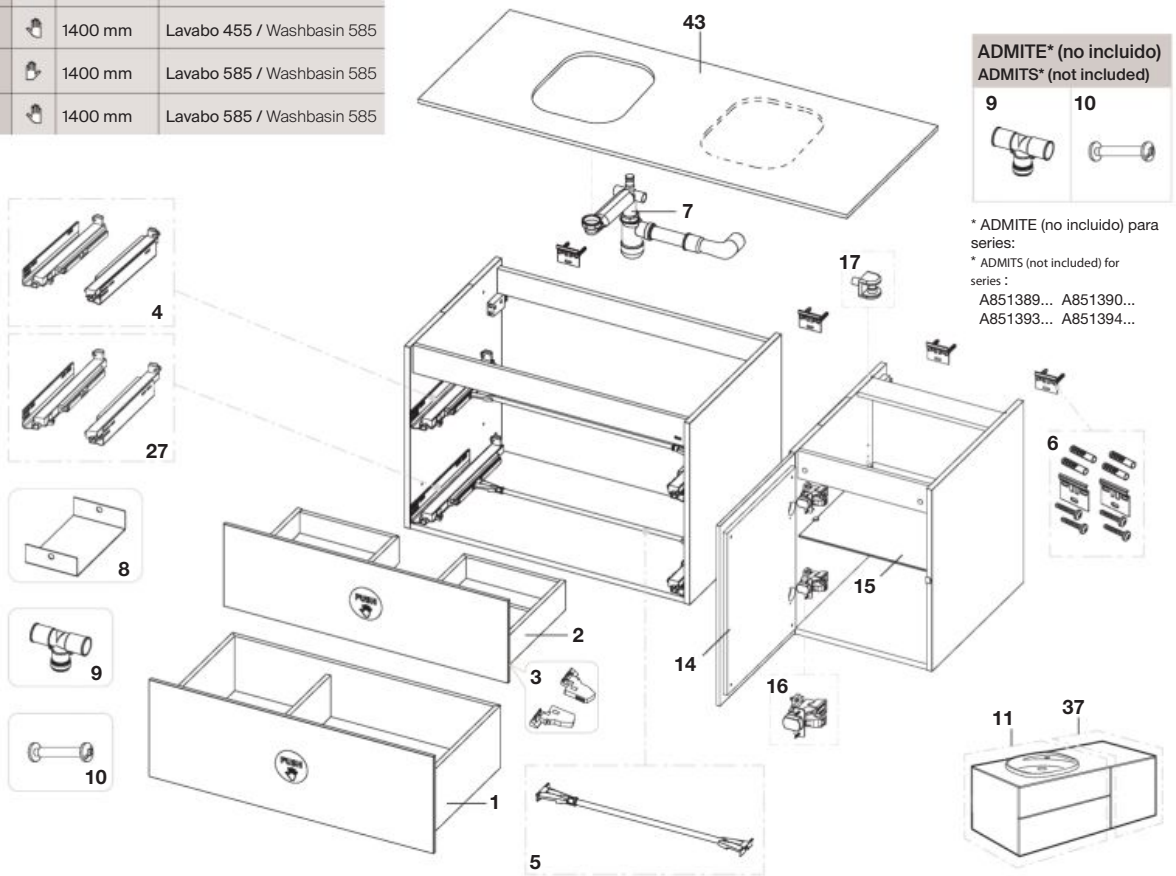

ADMITE* (no incluido)
ADMITS* (not included)

* ADMITE (no incluido) para series:
* ADMITS (not included) for series :
A851389... A851390...
A851393... A851394...

Las últimas posiciones de cada código, indican el acabado (color):
In the product reference replace (...) with the code for the selected finish code:
402 Roble City texturizado / City textured oak
806 Blanco Brillante / Bright white

				€
1		**AU00481402**	600 mm	165,00
		AU00481806		165,00
		AU00482402	800 mm	188,00
		AU00482806		188,00
		AU00483402	1000 mm	215,00
		AU00483806		215,00
2		**AU00484402**	600 mm	163,00
		AU00484806		163,00
		AU00485402	800 mm	127,00
		AU00485806		127,00
		AU00486402	1000 mm	116,00
		AU00486806		116,00
3		**AU0048700R**		11,50
4		**AU0048800R**	350 mm	108,00

				€
5		**AU0049000R**	600 mm	23,70
		AU0049100R	800 mm	24,80
		AU0049200R	1000 mm	25,80
6		**AU0013300R**		15,80
7		**AU0014100R**		44,90
8		**AU0049300R**		17,50
9		**AU0020800R**		7,68
10	4 un	**AU0016500R**		5,47
14		**AU00494402**		128,00
		AU00494806		128,00
15		**AU0049500R**		68,00
16	2 un	**AU0049600R**		44,50
17	4 un	**AU0048000R**		3,60
27		**AU0048900R**	400 mm	133,00

Producto acabado compatible:
Compatible finished products:

					€
11	**A857144...**	600 mm			-
	A857145...	800 mm			-
	A857146...	1000 mm			-
37	**A857147...**	400 mm			-
43	**A857244432**	1000 mm		Lavabo 455 / Basin 455	-
	A857245432	1000 mm		Lavabo 455 / Basin 455	-
	A857250432	1200 mm		Lavabo 455 / Basin 455	-
	A857251432	1200 mm		Lavabo 455 / Basin 455	-
	A857252432	1200 mm		Lavabo 585 / Basin 585	-
	A857253432	1200 mm		Lavabo 585 / Basin 585	-
	A857258432	1400 mm		Lavabo 455 / Basin 455	-
	A857259432	1400 mm		Lavabo 455 / Basin 455	-
	A857260432	1400 mm		Lavabo 585 / Basin 585	-
	A857261432	1400 mm		Lavabo 585 / Basin 585	-

Beyond

Mueble base de dos cajones con lavabo doble de sobre encimera
Two drawers vanity unit with double over contertop washbasin

A851418...	1600 mm	Lavabo 455 / Washbasin 455
A851419...	1600 mm	Lavabo 585 / Washbasin 585

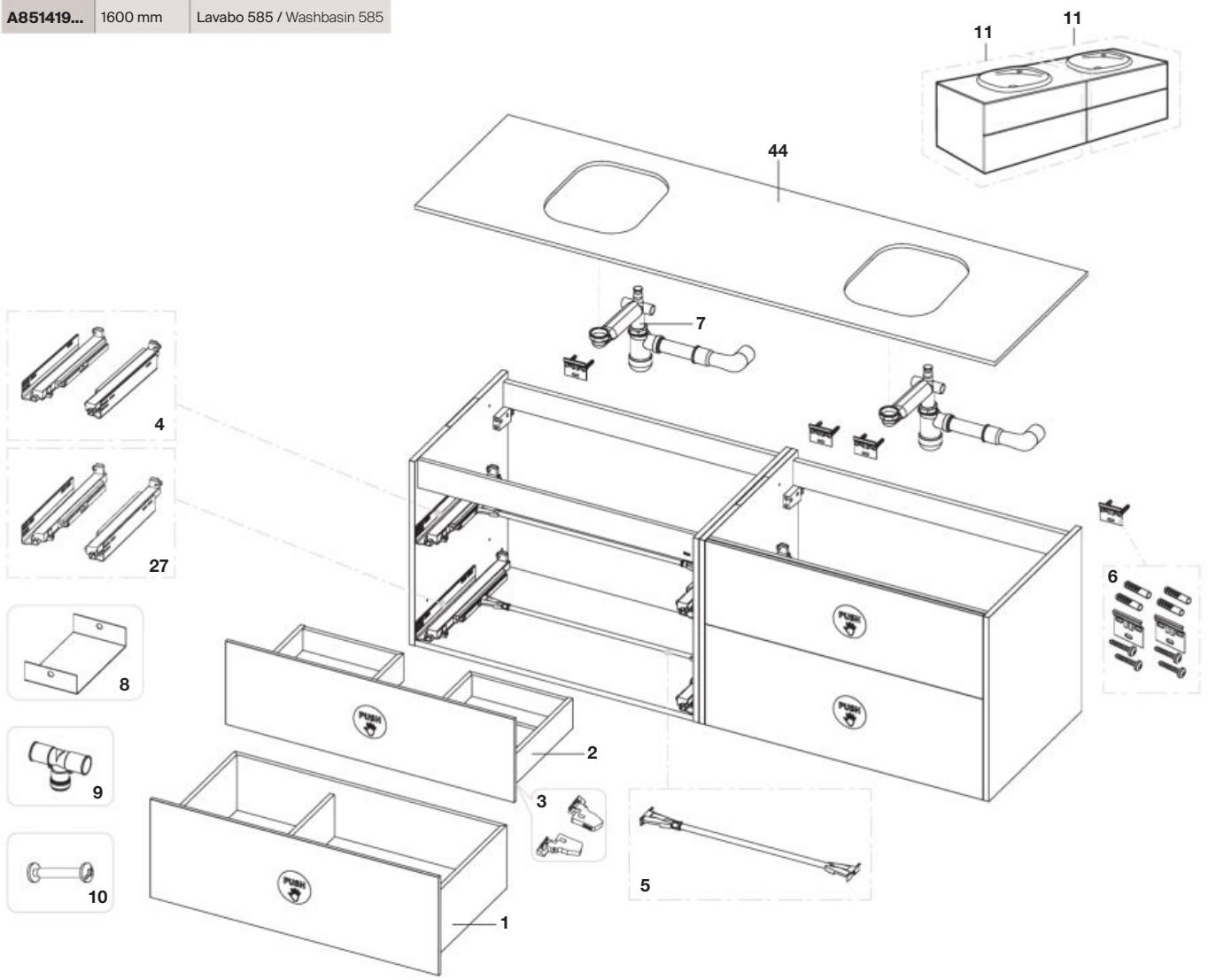

Las últimas posiciones de cada código, indican el acabado (color):
In the product reference replace (...) with the code for the selected finish code:
402 Roble City texturizado / City textured oak
806 Blanco Brillante / Bright white

			€
1	**AU00481402**	600 mm	165,00
	AU00481806		165,00
	AU00482402	800 mm	188,00
	AU00482806		188,00
	AU00483402	1000 mm	215,00
	AU00483806		215,00
2	**AU00484402**	600 mm	163,00
	AU00484806		163,00
	AU00485402	800 mm	127,00
	AU00485806		127,00
	AU00486402	1000 mm	116,00
	AU00486806		116,00

				€
3		**AU0048700R**		11,50
4		**AU0048800R**	350 mm	108,00
5		**AU0049000R**	600 mm	23,70
		AU0049100R	800 mm	24,80
		AU0049200R	1000 mm	25,80
6		**AU0013300R**		15,80
7		**AU0014100R**		44,90
8		**AU0049300R**		17,50
9		**AU0020800R**		7,68
10	4 un	**AU0016500R**		5,47
27		**AU0048900R**	400 mm	133,00

Producto acabado compatible:
Compatible finished products:

				€
11	**A857145...**	800 mm		-
44	**A857264432**	1600 mm	Lavabo 455 / Basin 455	-
	A857265432	1600 mm	Lavabo 585 / Basin 585	-

Beyond

Mueble base de dos cajones con tiradores y lavabo Fineceramic®
Two drawers vanity unit with handle and Fineceramic® washbasin

A851452...	600 mm
A851453...	800 mm
A851454...	1000 mm

ADMITE* (no incluido)
ADMITS* (not included)

35



36



Las últimas posiciones de cada código, indican el acabado (color):
In the product reference replace (...) or (..) with the code for the selected finish code:

Producto Product	Recambio Spare Part	Acabado Finished	
806		WH	Blanco / White
155		OA	Roble / Oak
434		AS	Fresno / Nordic Ash
447		GM	Gris mate / Matt grey

				€
6		**AU0013300R**		15,80
7		**AU0014100R**		44,90
9		**AU0020800R**		7,68
10	4 un	**AU0016500R**		5,47
13		**A50640390C**		57,20
28		**AU00642..R**	600 mm	79,80
		AU00638..R	800 mm	88,70
		AU00640..R	1000 mm	102,00

Sólo se muestra el precio del acabado Blanco /
Only the price of the White finish is shown

				€
29		**AU00641..R**	600 mm	88,20
		AU00643..R	800 mm	98,50
		AU00644..R	1000 mm	47,70
30		**AU0065500R**	600 mm	69,80
		AU0065600R	800 mm	79,50
		AU0065700R	1000 mm	119,00
31		**AU0065800R**		48,70
32		**AU0065900R**		16,00
33		**AU0067500R**		9,07

Admite (no incluido) / Admits (not included)

		€
35	**AU0066200R**	2,62
36	**A857340...**	-

Producto acabado compatible:
Compatible finished products:

			€
12	**A3270BC000**	600 mm	-
	A3270BB000	800 mm	-
	A3270BA000	1000 mm	-
34	**A857336...**	600 mm	-
	A857337...	800 mm	-
	A857338...	1000 mm	-

Beyond

Lavabo Totem Fineceramic® / Totem Fineceramic® Basin

A3270B0..0

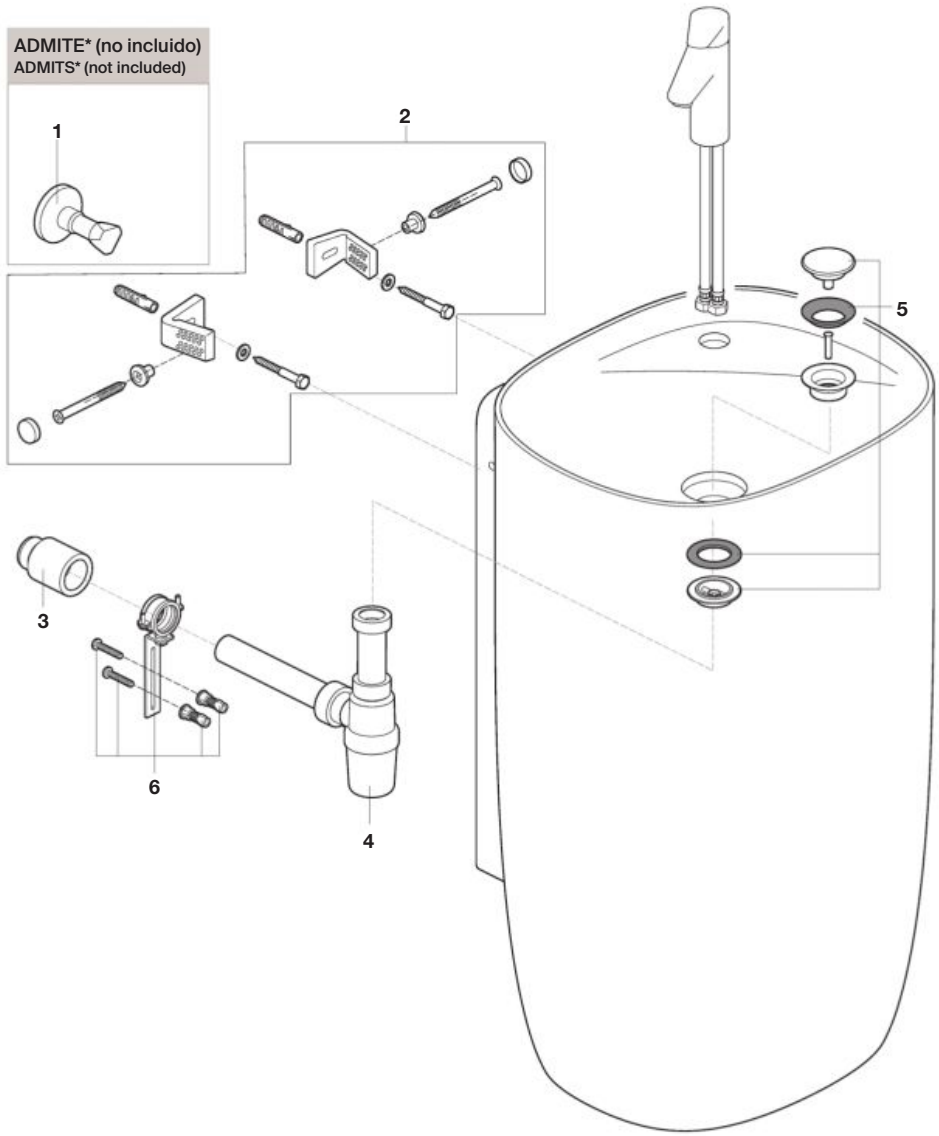

Sustituir (..) de la referencia por el código de color elegido:
In the product reference replace (..) with the code for the selected finish code:
00 Blanco / White
62 Blanco mate / Matt white
63 Perla / Pearl
64 Onix / Onyx
65 Beige
66 Café / Coffee

		€
2	**AV0026800R**	9,95
3	**AV0013400R**	6,03
4	**AG0147000R**	23,00

		€
5	**A506403900**	33,60
	A506403962	80,50
	A506403963	80,50
	A506403964	80,50
	A506403965	80,50
	A506403966	80,50
6	**AV0037900R**	55,00

Producto acabado compatible:
Compatible finished products:

		€
1	**A525164400**	-

Beyond

Lavabos Fineceramic® / Fineceramic® Washbasin

A3270B1..0

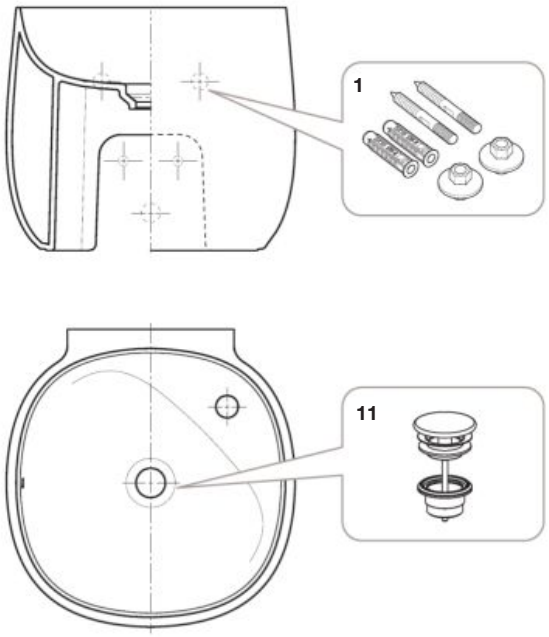

A3270B8..0
A3270B9..0

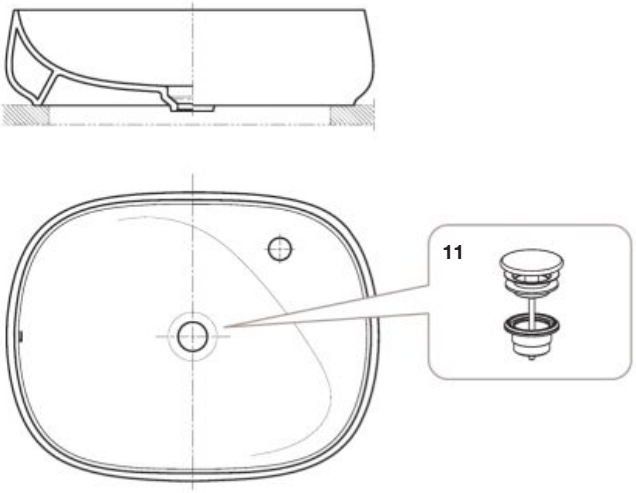

A3270B6..0
A3270B7..0

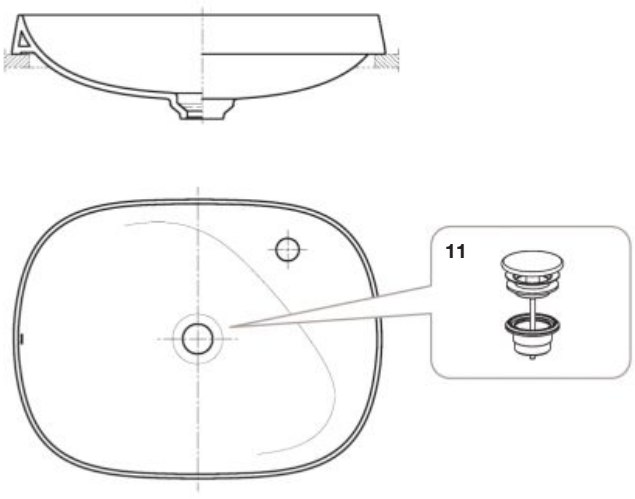

Sustituir (..) de la referencia por el código de color elegido:
In the product reference replace (..) with the code for the selected finish code:
00 Blanco / White
62 Blanco mate / Matt white
63 Perla / Pearl
64 Onix / Onyx
65 Beige
66 Café / Coffee

			€
1	**AV0007500R**		5,51
11	**A506403900**	Cromado / Chromed	33,60
	A50640390C	Blanco / White	57,20

Beyond

Inodoro de tanque bajo / Close-coupled toilet

A3420B9..0	Taza / Bowl
A3410B1..0	Tanque / Cistern

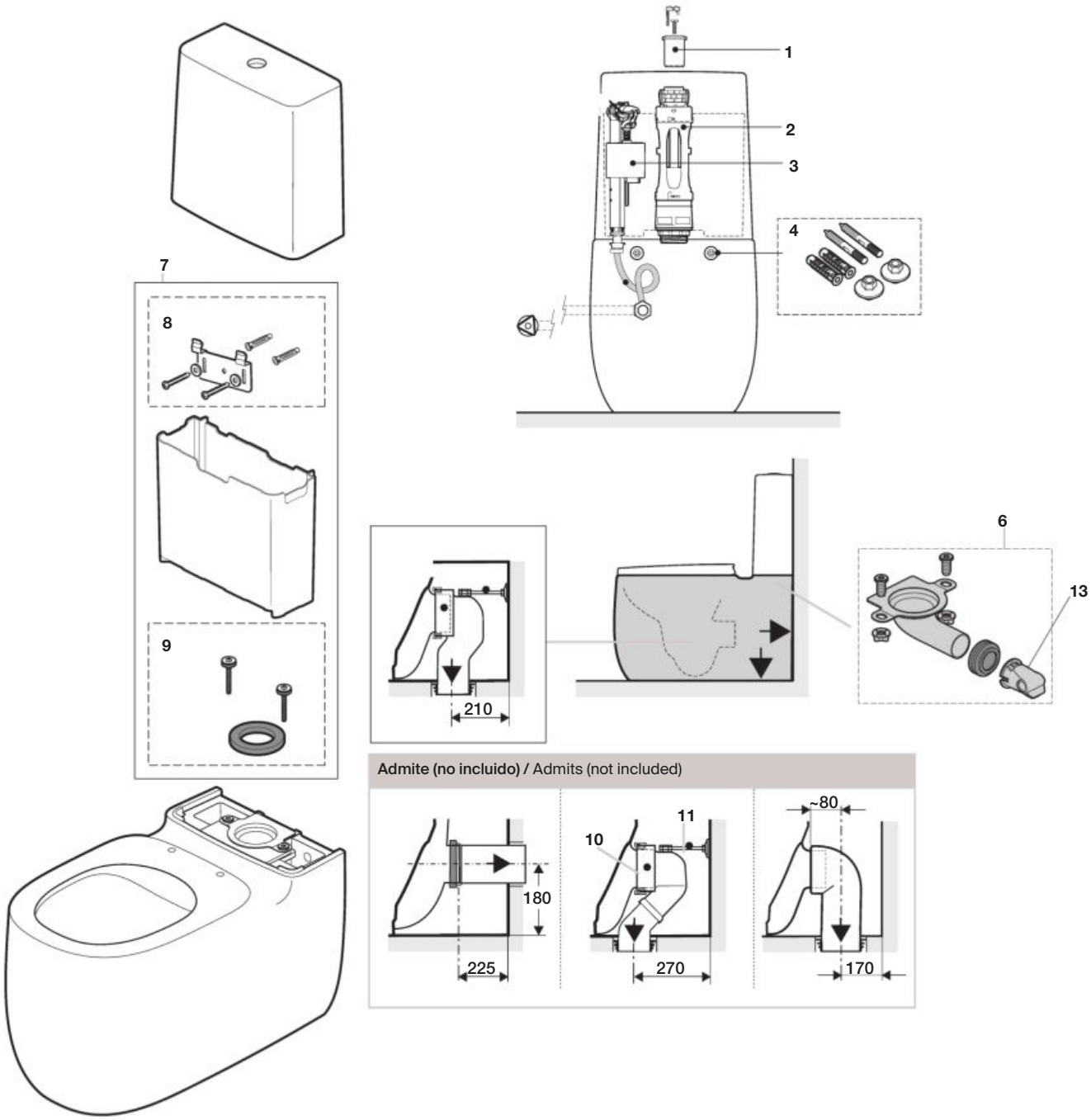

Sustituir (..) de la referencia por el código de color elegido:
In the product reference replace (..) with the code for the selected finish code:
00 Blanco / White
62 Blanco mate / Matt white
63 Perla / Pearl
64 Onix / Onyx
65 Beige
66 Café / Coffee

			€
1	**AH0001700R**		14,00
2	**AH0000100R**		35,10
3	**A822508900**	(3/8")	-
	A822505750	(1/2")	-
4	**A822045400**		8,55

		€
6	**AV0037200R**	15,90
7	**AV0038100R**	38,60
8	**AV0038000R**	15,30
9	**AV0036000R**	10,20
10	**AV0007700R**	14,60

		€
11	**AV0013100R**	3,46
13	**AV0027000R**	3,77

Carmen (Old)

Mueble base de dos cajones con lavabo / Two drawers and two doors with washbasin vanity unit

A851369...	1 orificio / 1 hole
A851371...	3 orificios / 3 holes

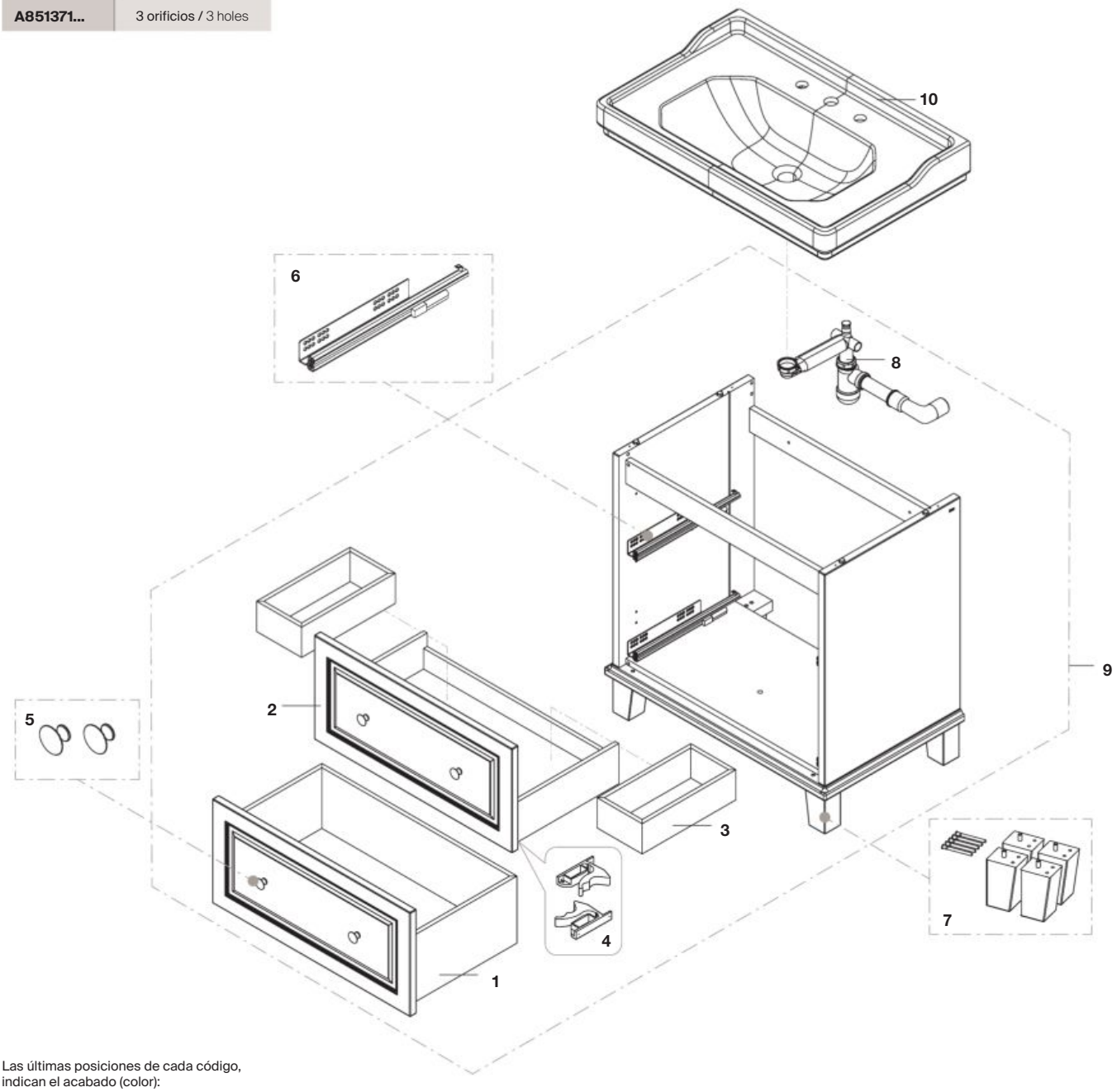

Las últimas posiciones de cada código, indican el acabado (color):
In the product reference replace (...) with the code for the selected finish code:
415 Blanco / White
417 Gris oscuro / Dark grey

			€
1		**AU00459415**	170,00
		AU00459417	165,00
2		**AU00460415**	178,00
		AU00460417	175,00
3		**AU0021200R**	22,80
4		**AU0017300R**	4,68
5		**AU0046200R**	18,80
6		**AU0017600R**	54,30
7		**AU00468415**	257,00
		AU00468417	262,00
8		**AU0014100R**	44,90

Producto acabado compatible:
Compatible finished products:

			€
9	**A857135...**	800 mm	-
10	**A3270A0000**	1 orificio / 1 hole	-
	A3270A0003	3 orificios / 3 holes	-

Carmen (Old)

Mueble base de dos cajones y dos puertas con encimera y lavabo
Two drawers and two doors with countertop and washbasin vanity unit basin

A857136...	1300 mm

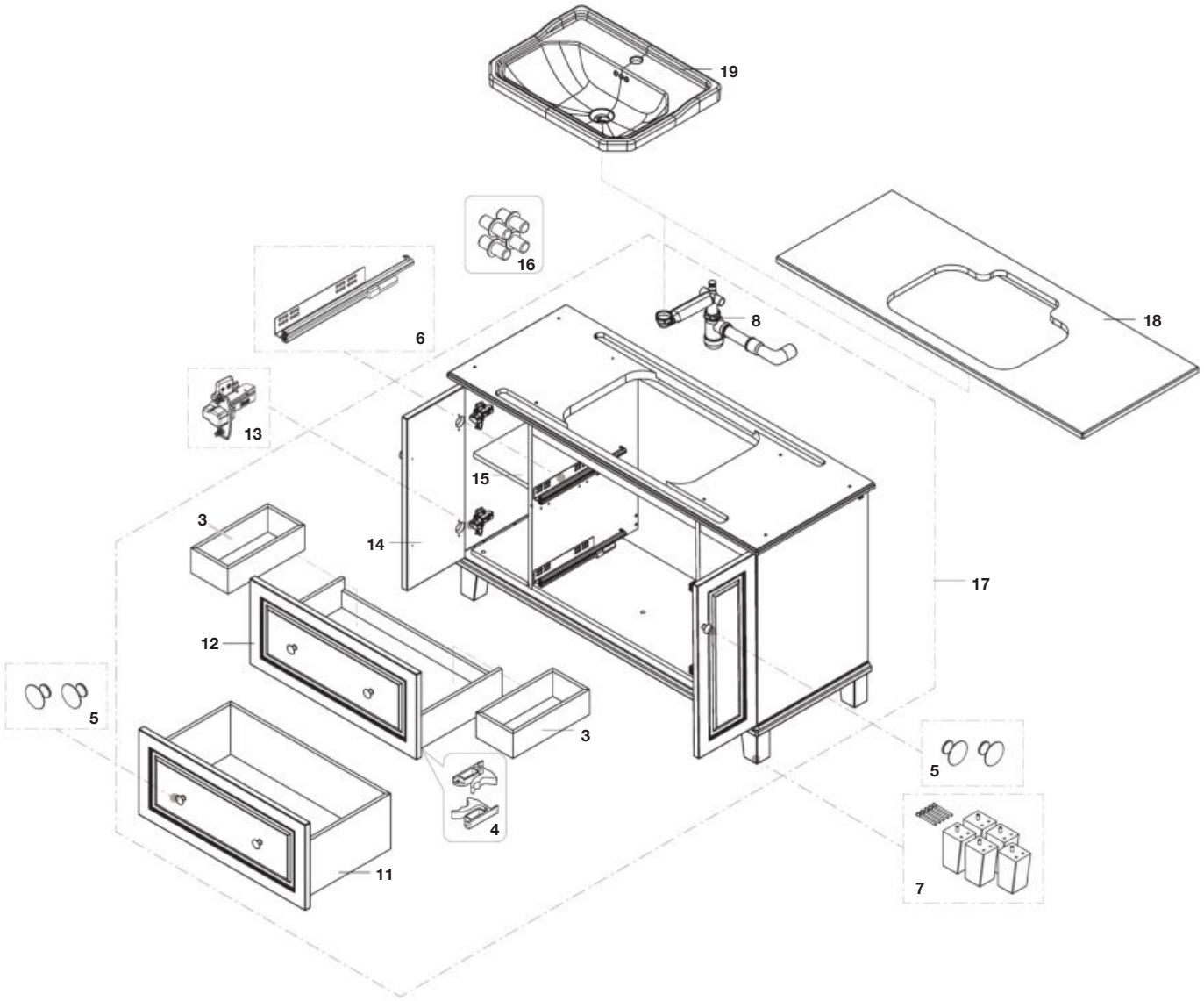

Las últimas posiciones de cada código, indican el acabado (color):
In the product reference replace (...) with the code for the selected finish code:
415 Blanco / White
417 Gris oscuro / Dark grey

3	**AU0021200R**	22,80
4	**AU0017300R**	4,68
5	**AU0046200R**	18,80
6	**AU0017600R**	54,30
7	**AU00468415**	257,00
	AU00468417	262,00
8	**AU0014100R**	44,90
11	**AU00469415**	168,00
	AU00469417	168,00

12	**AU00470415**	175,00
	AU00470417	177,00
13 2 un	**AU0046300R**	21,80
14	**AU00471415**	109,00
	AU00471417	109,00
15	**AU00472415**	31,50
	AU00472417	31,50
16	**AU0013900R**	8,63

Producto acabado compatible:
Compatible finished products:

			€
17	**A857136...**	1300 mm	-
18	**A857142421**	Negro Marquina / Marquina black	-
	A857142420	Blanco Venato / Venato white	-
19	**A3270A5000**	1 orificio / 1 hole	-
	A3270A5003	3 orificios / 3 holes	-

Carmen (Old)

Estructura de acero inoxidable con lavabo / Stainless steel structure with washbasin

A851370425	1 orificio / 1 hole
A851372425	3 orificios / 3 holes

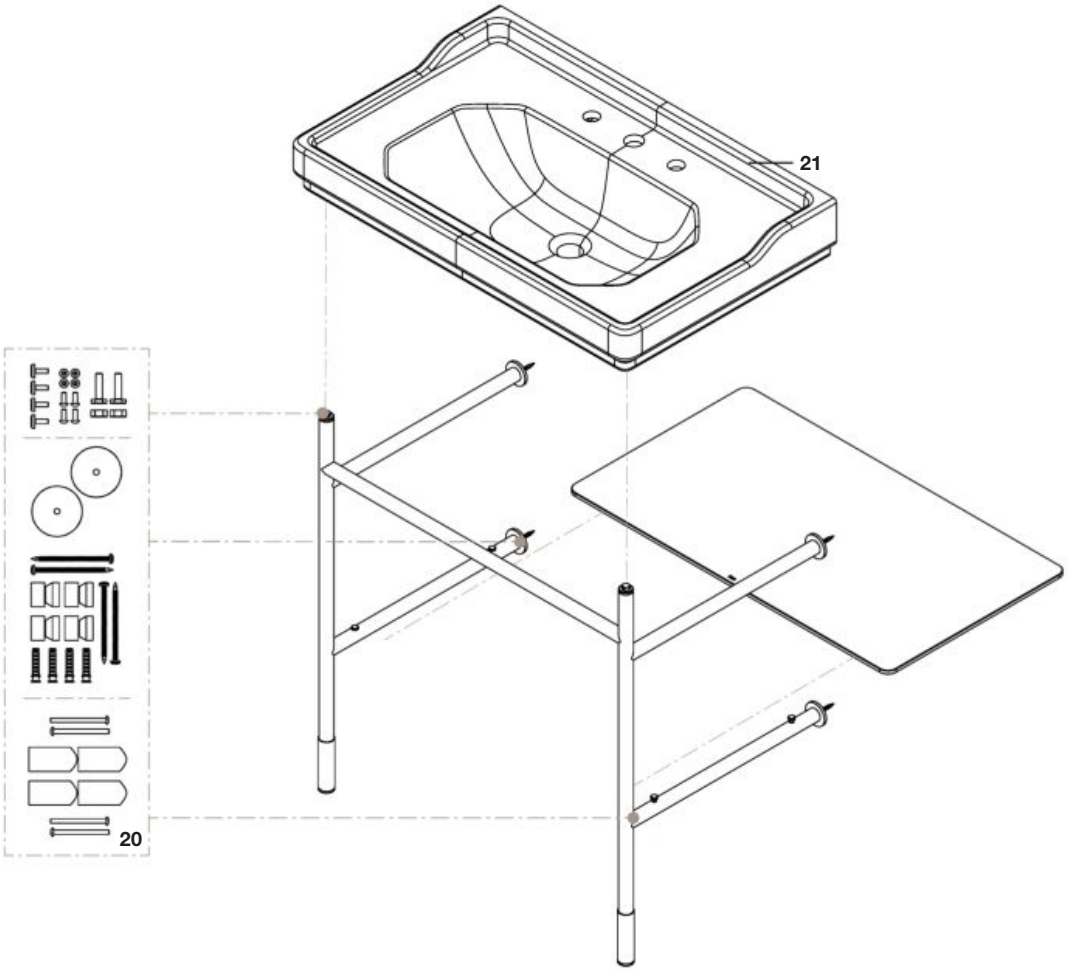

			€
20	**AU0047400R**		237,00

Producto acabado compatible:
Compatible finished products:

			€
21	**A3270A0000**	1 orificio / 1 hole	-
	A3270A0003	3 orificios / 3 holes	-

Carmen (Old)

Columna dos puertas con espejo / Mirrored two doors column

A857137...	1900 mm

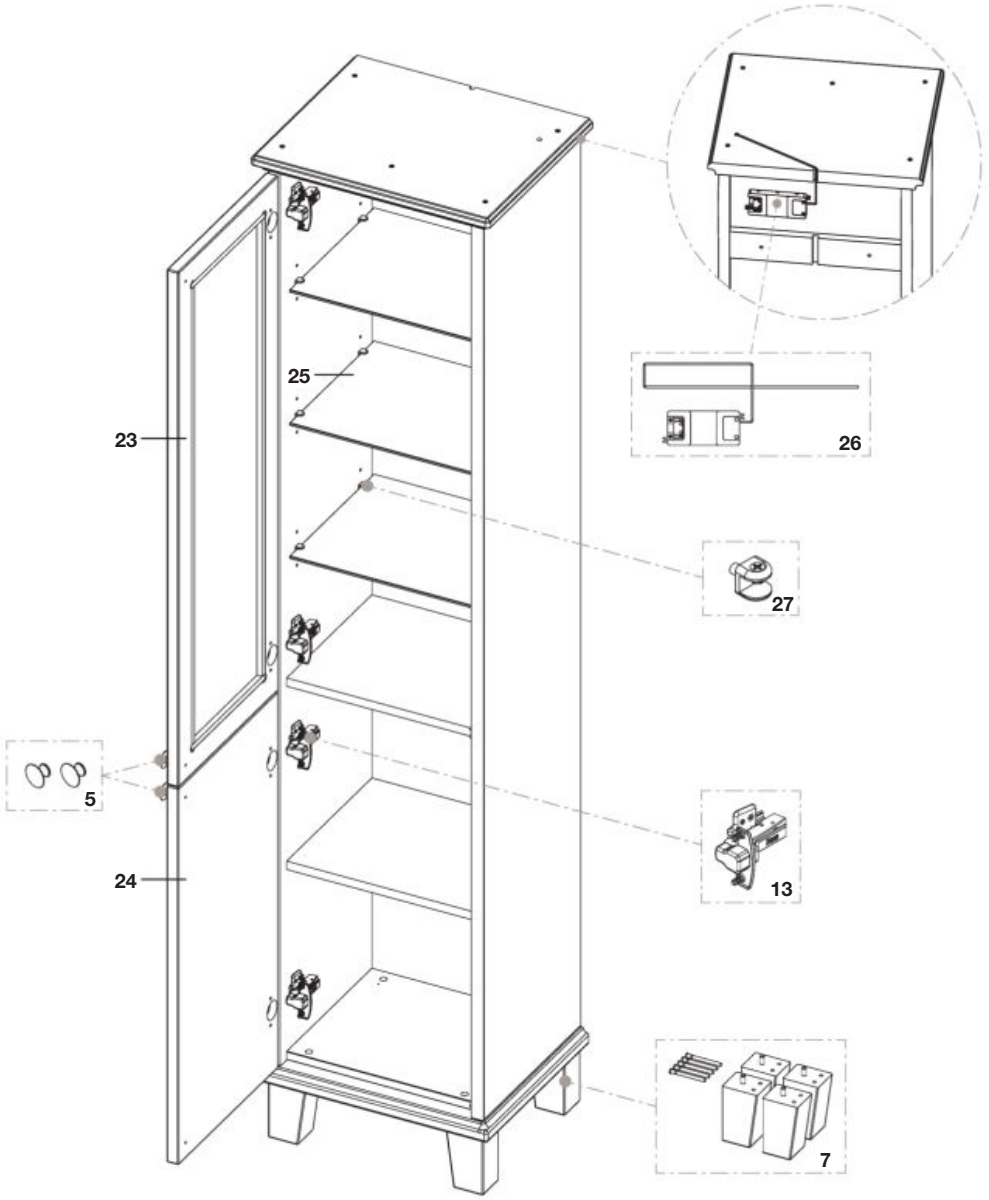

Las últimas posiciones de cada código, indican el acabado (color):
In the product reference replace (...) with the code for the selected finish code:
415 Blanco / White
417 Gris oscuro / Dark grey

			€
5		**AU0046200R**	18,80
7		**AU00468415**	257,00
		AU00468417	262,00
13	2 un	**AU0046300R**	21,80

		€
23	**AU00473415**	377,00
	AU00473417	340,00
24	**AU00477415**	147,00
	AU00477417	152,00

			€
25		**AU0047600R**	21,80
26		**AU0047900R**	64,20
27	4 un	**AU0048000R**	3,60

Carmen (Old)

Inodoro de tanque bajo / Close-coupled toilet

A3420A7000	Taza / Bowl
A3410A1000	Tanque / cistern

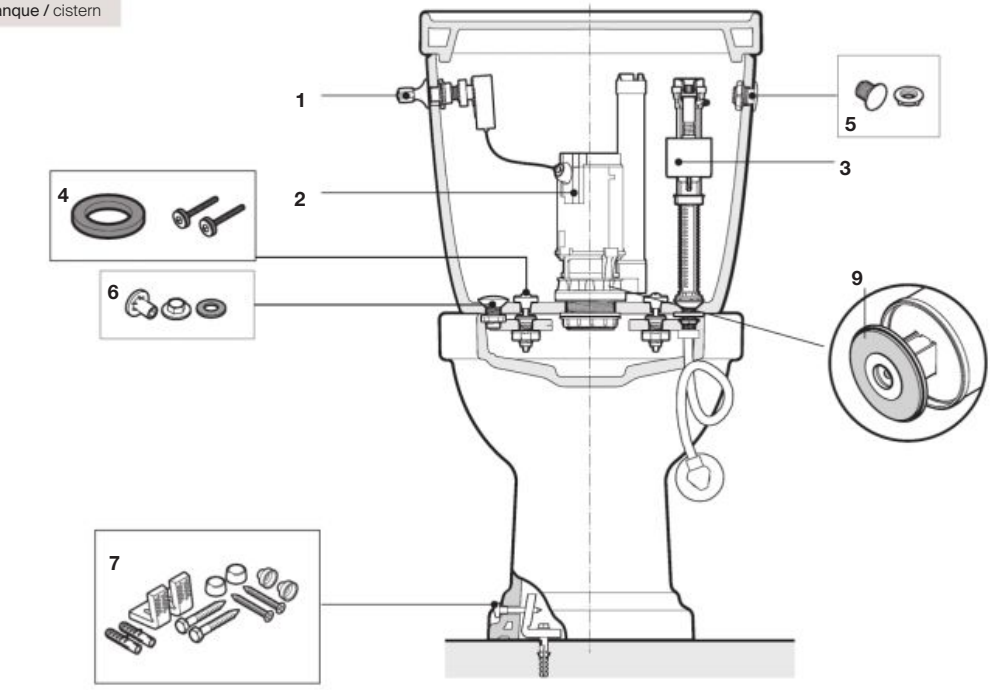

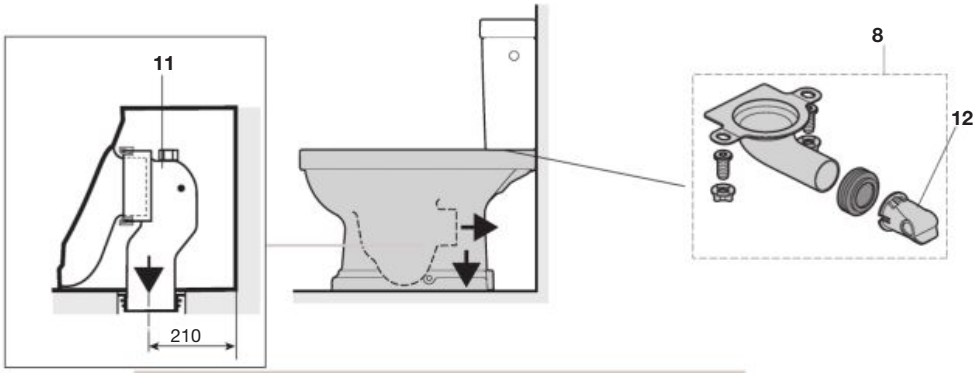

Admite (no incluido) / Admits (not included)

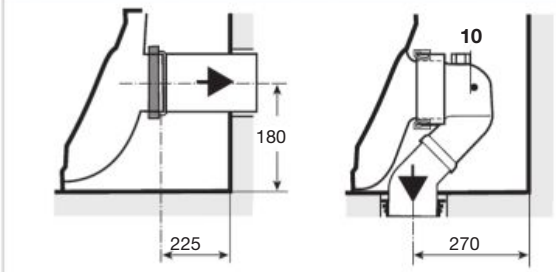

			€
1	**AV0036900R**		58,60
2	**A82202511H**		-
3	**A822504400**	(3/8")	23,20
	AH0007800R	(1/2")	20,00
4	**AV0036000R**		10,20
5	**AV0012600R**		2,54
6	**A822085100**		1,72

		€
7	**AV0009400R**	6,16
8	**AV0037400R**	15,90
9	**AH0007200R**	1,72
10	**AV0007700R**	14,60
11	**AV0007900R**	14,60
12	**AV0027000R**	3,77

Hall

Lavabos / Washbasins

A327621..0
A327881..0

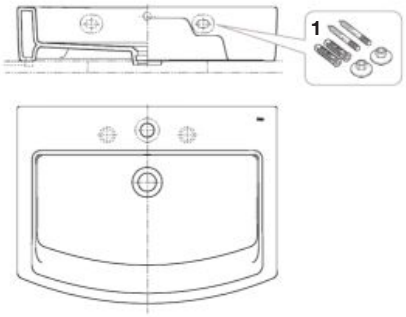

A327620..0

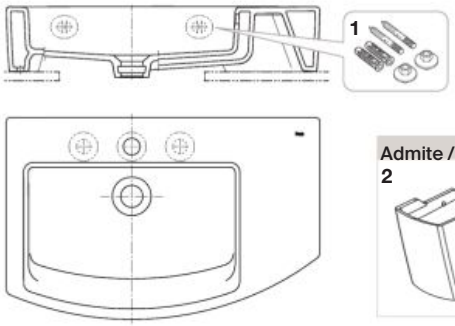

Admite / Admits

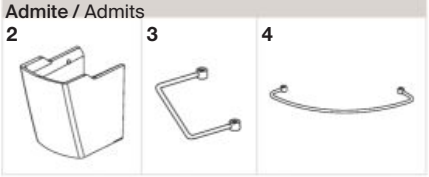

A327624..0

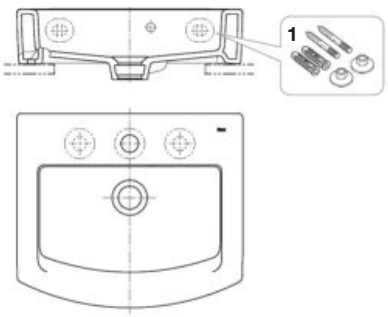

A327622..0
A327623..0

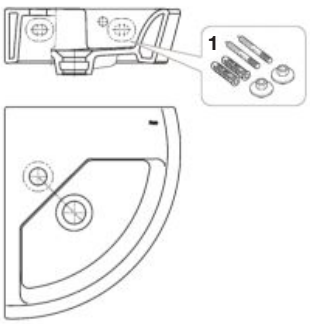

A325883..0

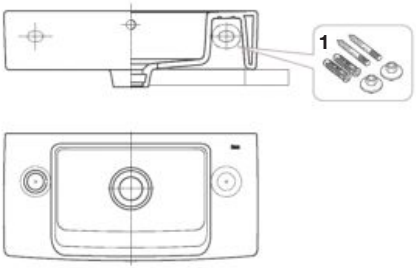

A337621..0

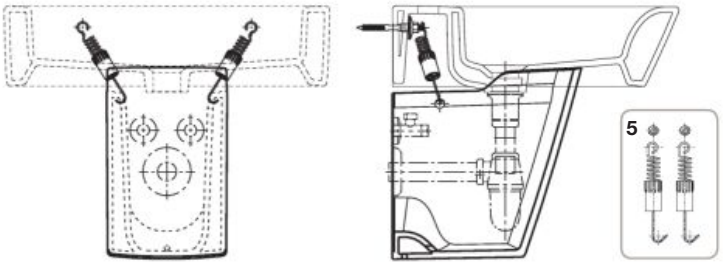

A840597001

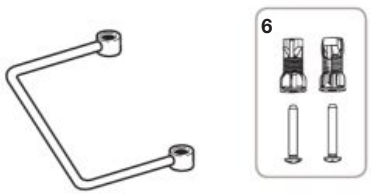

A840628001



Las últimas posiciones de cada código, indican el acabado (color):
In the product reference replace (..) with the code for the selected finish code:
00 Blanco / White
17 Pergamon
91 Edelweiss
92 Grafito / Graphite

		€
1	**AV0007500R**	5,51
5	**AV0015900R**	8,02
6	**AI0002400R**	3,78

Admite (no incluido)
Admits (not included)

			€
2	**A337621..0**		-
3	**A840597001**	220 mm	N.D.
4	**A840628001**	458 mm	-

Inspira

Mueble base dos cajones Unik Inspira: / Base unit two drawers Unik Inspira:

UNIK INSPIRA MUEBLE BASE 2 CAJONES + LAVABO BASE UNIT 2 DRAWERS + WB	
A851990...	600 mm
A851991...	800 mm
A851992...	1000 mm

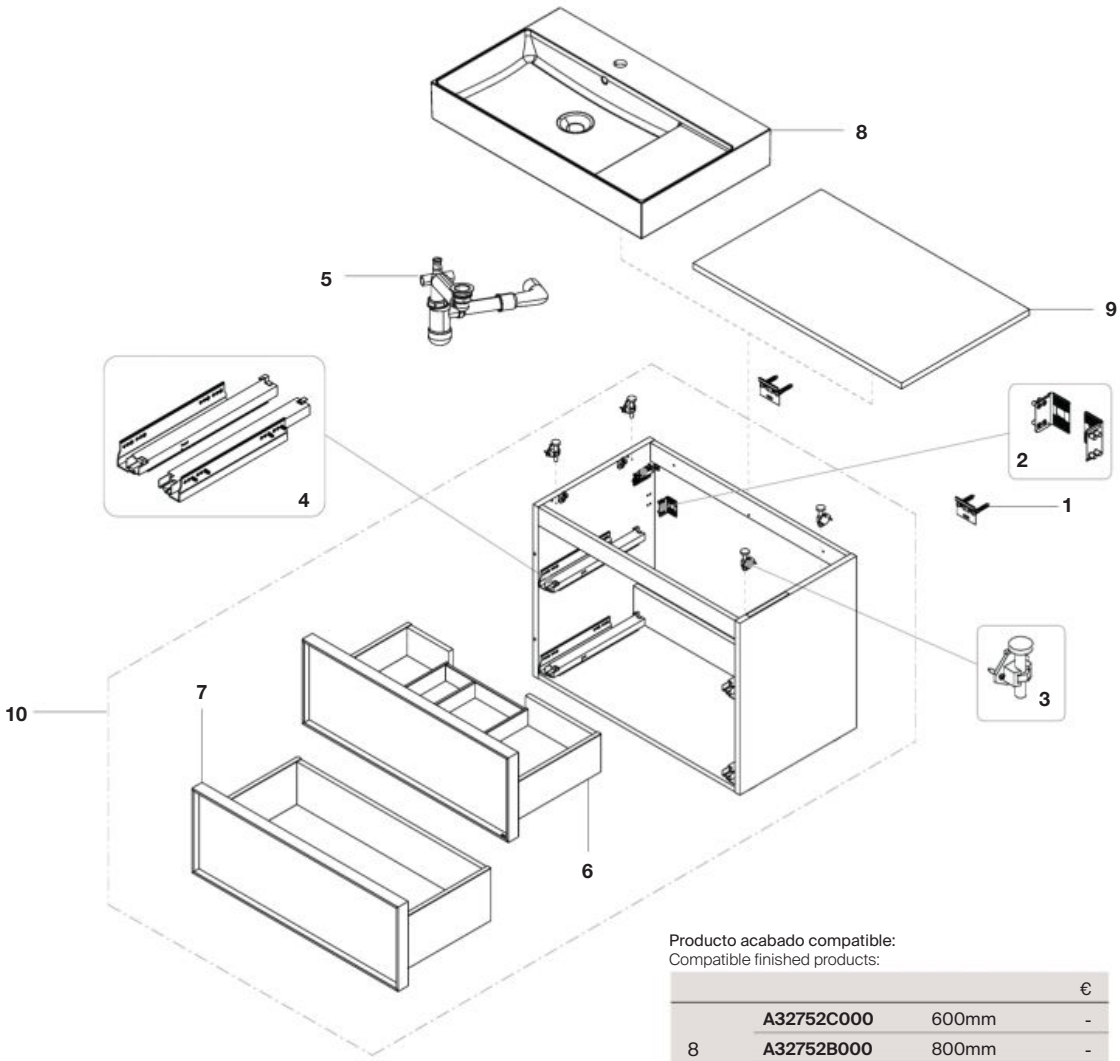

Producto acabado compatible:
Compatible finished products:

			€
8	**A32752C000**	600mm	-
	A32752B000	800mm	-
	A32752A000	1000mm	-
9	**A857849..**	600mm	-
	A857850..	800mm	-
	A857851..	1000mm	-
10	**A857845..**	600mm	-
	A857846..	800mm	-
	A857847..	1000mm	-

Las últimas posiciones de cada código indican el acabado (color):
In the product reference replace (...) with the code for the selected finish code:

Producto Product	Recambio Spare Part	Acabado Finished
509	**MW**	**Blanco mate /** Matt White
510	**MG**	**Gris arena /** Sand Grey
552	**TR**	**Terracota /** Terracota
556	**MA**	**Magnolia /** Magnolia
546	**WP**	**Pino blanco /** White Pine

			€
1	2 un	**AU0013300R**	15,80
2	+	**AU0106400R**	16,20
3	4 un	**AU0106500R**	43,00
4	+	**AU0106600R**	109,00
5		**AU0014100R**	44,90

				€
6	**AU01067MWR**	600mm		517,00
	AU01067MGR			517,00
	AU01067TRR			545,00
	AU01067MAR			490,00
	AU01067WPR			492,00
	AU01069MWR	800mm		542,00
	AU01069MGR			540,00
	AU01069TRR			570,00
	AU01069MAR			513,00
	AU01069WPR			520,00
	AU01071MWR	1000mm		592,00
	AU01071MGR			592,00
	AU01071TRR			-
	AU01071MAR			563,00
	AU01071WPR			562,00

				€
7	**AU01068MWR**	600mm		455,00
	AU01068MGR			455,00
	AU01068TRR			483,00
	AU01068MAR			430,00
	AU01068WPR			430,00
	AU01070MWR	800mm		482,00
	AU01070MGR			482,00
	AU01070TRR			513,00
	AU01070MAR			455,00
	AU01070WPR			460,00
	AU01072MWR	1000mm		527,00
	AU01072MGR			527,00
	AU01072TRR			553,00
	AU01072MAR			497,00
	AU01072WPR			495,00

Inspira

Mueble Auxiliar un cajón / Auxiliary unit one drawer

MUEBLE AUX. 1 CAJÓN AUX. UNIT 1 DRAWER	
A857852...	600 mm
A857853...	800 mm
A857854...	1000 mm

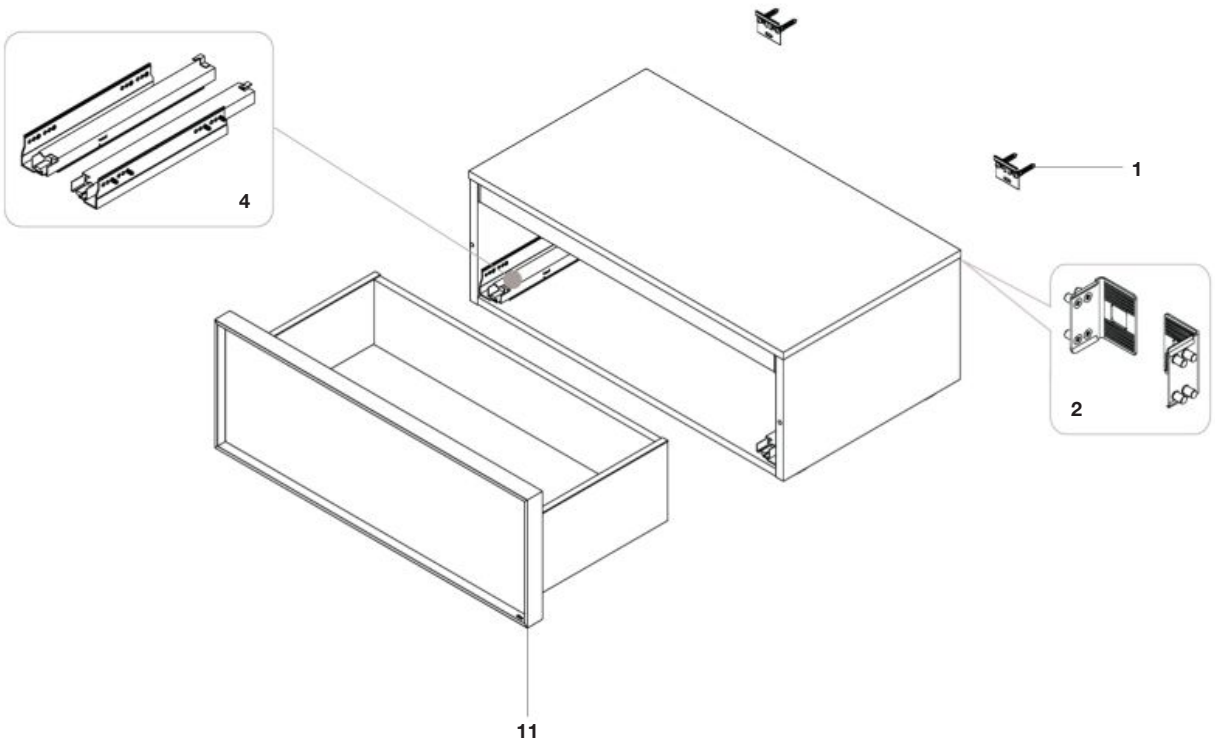

Las últimas posiciones de cada código indican el acabado (color):
In the product reference replace (...) with the code for the selected finish code:

Producto Product	Recambio Spare Part	Acabado Finished
509	**MW**	**Blanco mate /** Matt White
510	**MG**	**Gris arena /** Sand Grey
552	**TR**	**Terracota /** Terracota
556	**MA**	**Magnolia /** Magnolia
546	**WP**	**Pino blanco /** White Pine

			€
1	2 un	**AU0013300R**	15,80
2	+	**AU0106400R**	16,20
4	+	**AU0106600R**	109,00

			€
11	**AU01073MWR**	600mm	458,00
	AU01073MGR		458,00
	AU01073TRR		487,00
	AU01073MAR		432,00
	AU01073WPR		433,00
	AU01074MWR	800mm	513,00
	AU01074MGR		485,00
	AU01074TRR		518,00
	AU01074MAR		473,00
	AU01074WPR		475,00
	AU01075MWR	1000mm	532,00
	AU01075MGR		530,00
	AU01075TRR		560,00
	AU01075MAR		520,00
	AU01075WPR		522,00

Inspira

Columna / Column

COLUMNA COLUMN	
A857848...	400 mm

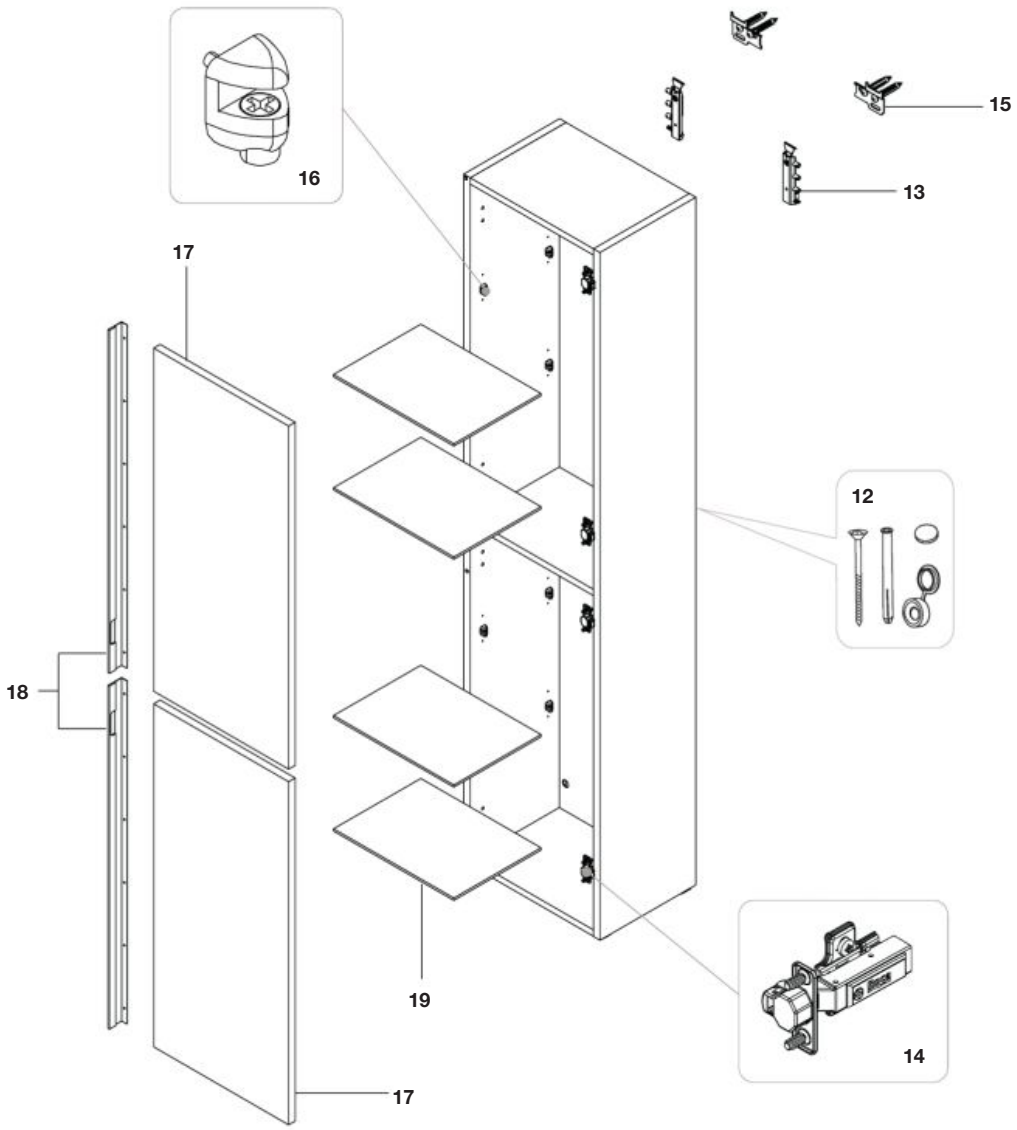

Las últimas posiciones de cada código indican el acabado (color):
In the product reference replace (...) with the code for the selected finish code:

Producto Product	Recambio Spare Part	Acabado Finished
509	**MW**	**Blanco mate /** Matt White
510	**MG**	**Gris arena /** Sand Grey
552	**TR**	**Terracota /** Terracota
556	**MA**	**Magnolia /** Magnolia
546	**WP**	**Pino blanco /** White Pine

			€
12		**AU0004200R**	10,50
13	+	**AU0091900R**	15,00
14	2 un	**AU0089500R**	18,00
15	+	**AU0092200R**	10,70
16	4 un	**AU0084600R**	1,65

			€
		AU01076MWR	119,00
		AU01076MGR	115,00
17		**AU01076TRR**	143,00
		AU01076MAR	82,20
		AU01076WPR	82,30
18	2 un	**AU0107700R**	135,00
19		**AU0107800R**	34,00

Inspira Square / Round

Inodoro de tanque bajo / Close-couple toilet

INSPIRA SQUARE	
A342537..0	Taza / bowl
A341520..0	Tanque / cistern

INSPIRA ROUND	
A342527..0	Taza / bowl
A342528..0	Taza compacto / compact bowl
A341520..0	Tanque / cistern

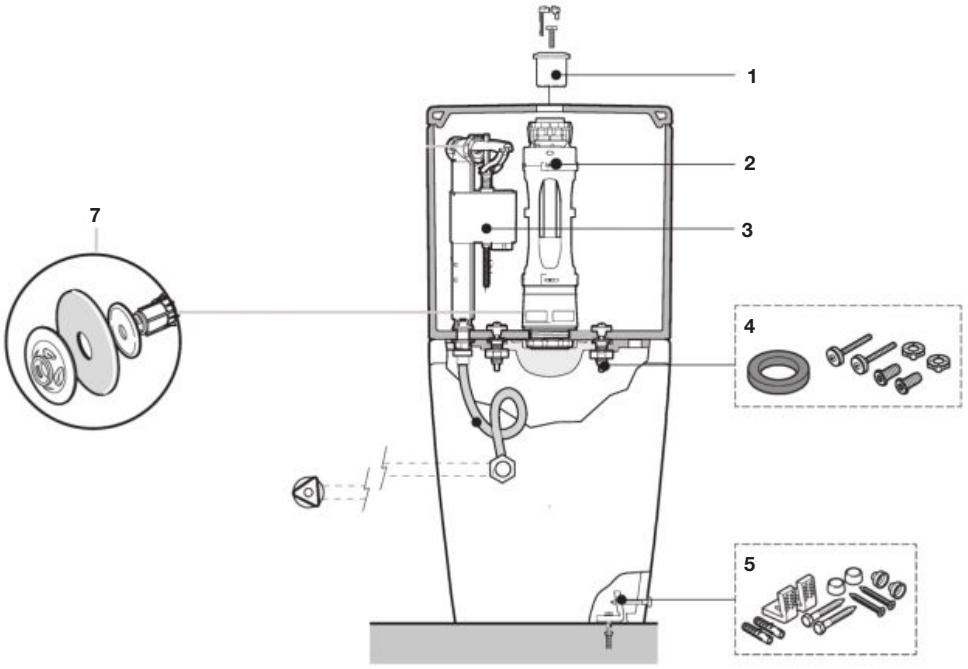

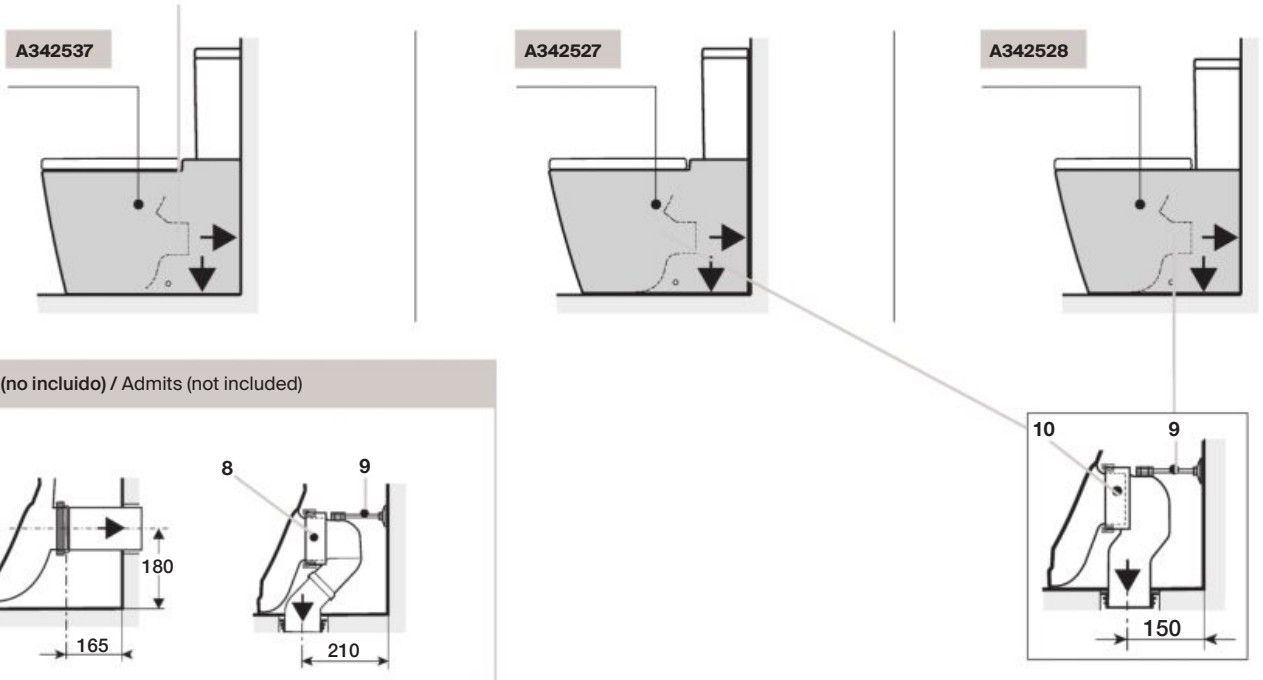

		€
1	**AH0001800R**	13,30
2	**AH0000100R**	35,10
3	**A822508900**	-
4	**AV0028800R**	17,30
5	**AV0026800R**	9,95

		€
7	**AH0007100R**	2,74
8	**AV0007700R**	14,60
9	**AV0013100R**	3,46
10	**AV0007900R**	14,60

Inspira (Old)

Mueble base de dos cajones con lavabo o encimera /
Two drawers vanity unit with washbasin or countertop

UNIK INSPIRA: MUEBLE BASE DE DOS CAJONES CON LAVABO TWO DRAWERS BASE UNIT WITH WASHBASIN	
A851075...	600 mm
A851076...	800 mm
A851077...	1000 mm

PACK INSPIRA: MUEBLE BASE DE DOS CAJONES CON ENCIMERA TWO DRAWERS BASE UNIT WITH COUNTERTOP	
A851079...	600 mm
A851080...	800 mm
A851081...	1000 mm

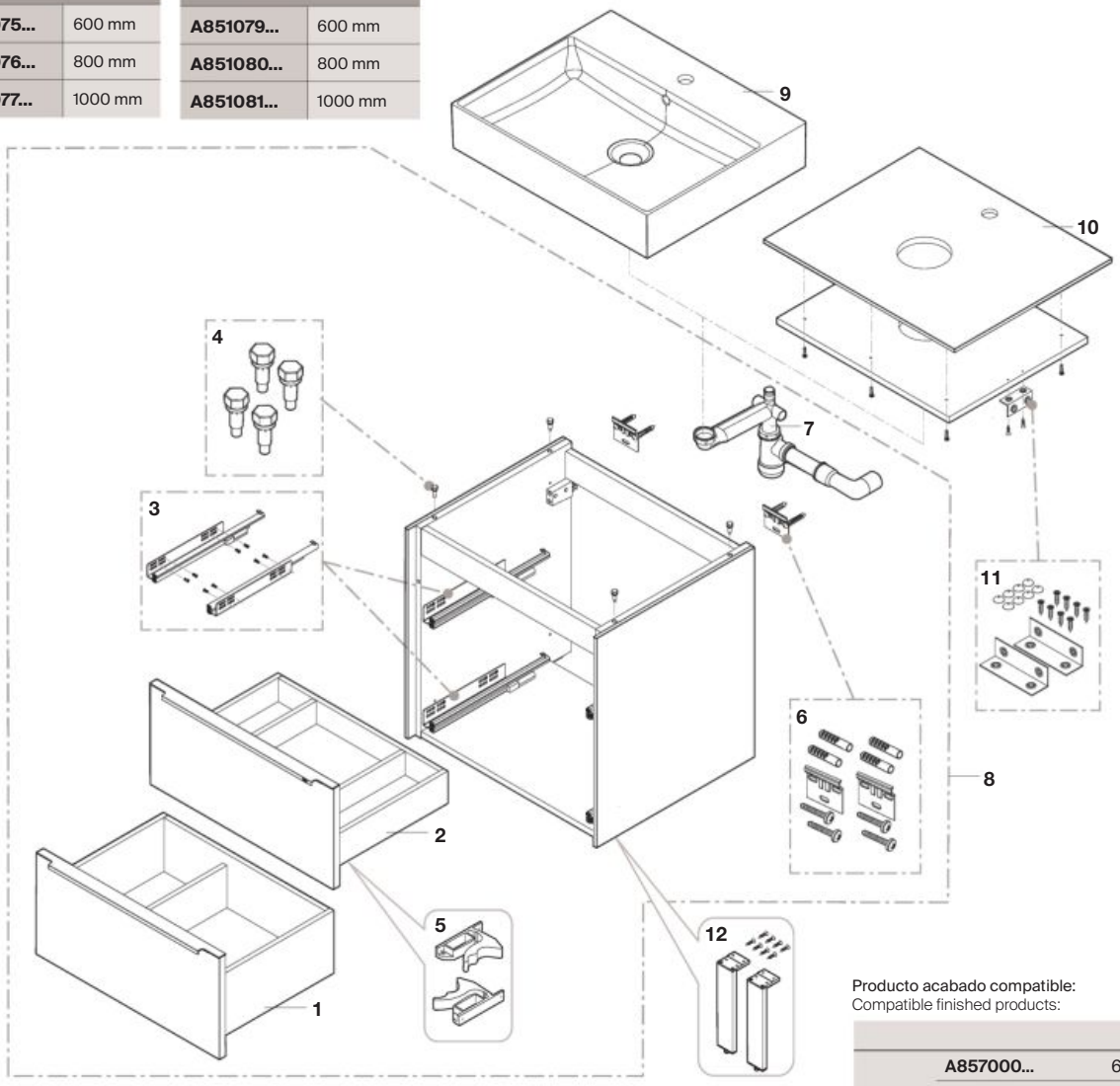

Las últimas posiciones de cada código indican el acabado (color):
In the product reference replace (...) with the code for the selected finish code:

Producto Product	Recambio Spare Part	Acabado Finished
806	**WHR**	Blanco / White
402	**OAR**	Roble / Oak
403	**DMR**	Cristal fumato + roble / Dark mirror + oak

Producto acabado compatible:
Compatible finished products:

			€
8	**A857000...**	600mm	-
	A857001...	800mm	-
	A857002...	1000mm	-
9	**A32752C000**	600mm	-
	A32752B000	800mm	-
	A32752A000	1000mm	-
10	**A857010...**	600mm	-
	A857011...	800mm	-
	A857012...	1000mm	-
12	**A816815339**		-

			€
1	**AU00317DMR**	600mm	200,00
	AU00317OAR		164,00
	AU00317WHR		170,00
	AU00322DMR	800mm	252,00
	AU00322OAR		210,00
	AU00322WHR		223,00
	AU00330DMR	1000mm	213,00
	AU00330OAR		143,00
	AU00330WHR		142,00

			€
2	**AU00315DMR**	600mm	230,00
	AU00315OAR		173,00
	AU00315WHR		163,00
	AU00324DMR	800mm	242,00
	AU00324OAR		195,00
	AU00324WHR		207,00
	AU00331DMR	1000mm	203,00
	AU00331OAR		136,00
	AU00331WHR		132,00

				€
3		**AU0017600R**	350mm	54,30
4		**AU0033800R**		10,50
5		**AU0017300R**		4,68
6		**AU0013300R**		15,80
7		**AU0014100R**		44,90
11		**AU0043500R**		3,47

Inspira (Old)

Mueble base de dos cajones con lavabo o encimera /
Two drawers vanity unit with washbasin or countertop

MUEBLE BASE DE DOS CAJONES CON ENCIMERA PARA LAVABO DE ENCIMERA SOFT/ ROUND TWO DRAWERS BASE UNIT WITH COUNTERTOP BASIN SOFT/ROUND	
A851087...	600 mm
A851088...	800 mm
A851089...	1000 mm

MUEBLE BASE DE DOS CAJONES CON ENCIMERA PARA LAVABO DE ENCIMERA SQUARE TWO DRAWERS BASE UNIT WITH COUNTERTOP BASIN SQUARE	
A851095...	600 mm
A851096...	800 mm
A851097...	1000 mm

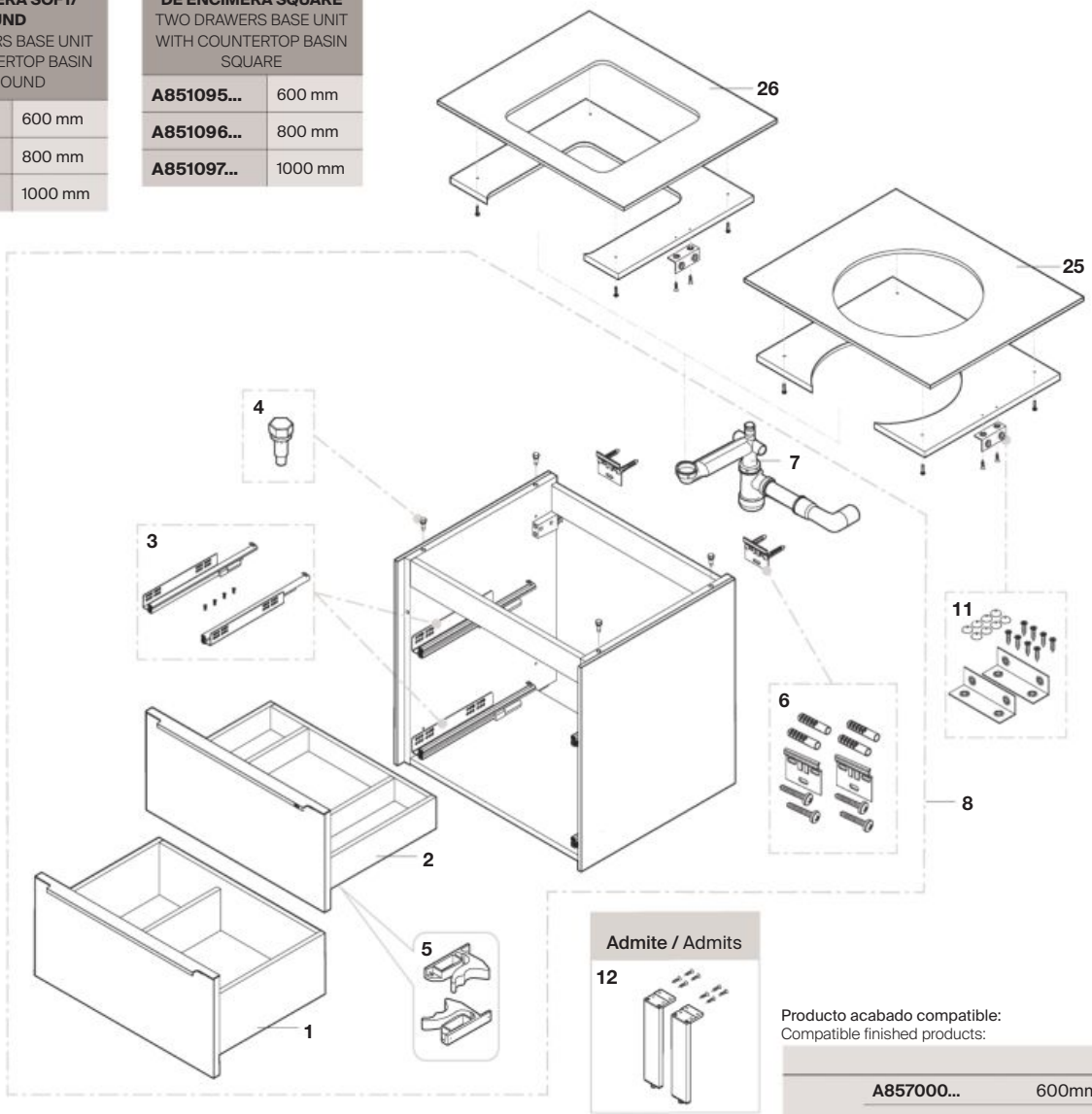

Admite / Admits

Producto acabado compatible:
Compatible finished products:

			€
8	**A857000...**	600mm	-
	A857001...	800mm	-
	A857002...	1000mm	-
12	**A816815339**		-
25	**A857018...**	600mm	-
	A857019...	800mm	-
	A857020...	1000mm	-
26	**A857026...**	600mm	-
	A857027...	800mm	-
	A857028...	1000mm	-

Las últimas posiciones de cada código indican el acabado (color):
In the product reference replace (...) with the code for the selected finish code:

Producto Product	Recambio Spare Part	Acabado Finished
806	**WHR**	Blanco / White
402	**OAR**	Roble / Oak
403	**DMR**	Cristal fumato + roble / Dark mirror + oak

				€
1	**AU00317DMR**	600mm		200,00
	AU00317OAR			164,00
	AU00317WHR			170,00
	AU00322DMR	800mm		252,00
	AU00322OAR			210,00
	AU00322WHR			223,00
	AU00330DMR	1000mm		213,00
	AU00330OAR			143,00
	AU00330WHR			142,00

				€
2	**AU00315DMR**	600mm		230,00
	AU00315OAR			173,00
	AU00315WHR			163,00
	AU00324DMR	800mm		242,00
	AU00324OAR			195,00
	AU00324WHR			207,00
	AU00331DMR	1000mm		203,00
	AU00331OAR			136,00
	AU00331WHR			132,00

				€
3	+	**AU0017600R**	350mm	54,30
4	4 un	**AU0033800R**		10,50
5	+	**AU0017300R**		4,68
6		**AU0013300R**		15,80
7		**AU0014100R**		44,90
11		**AU0043500R**		3,47

Inspira (Old)

Columna de una puerta con espejo / Mirrored one door column

A857034...		1600mm
A857004...		1600mm

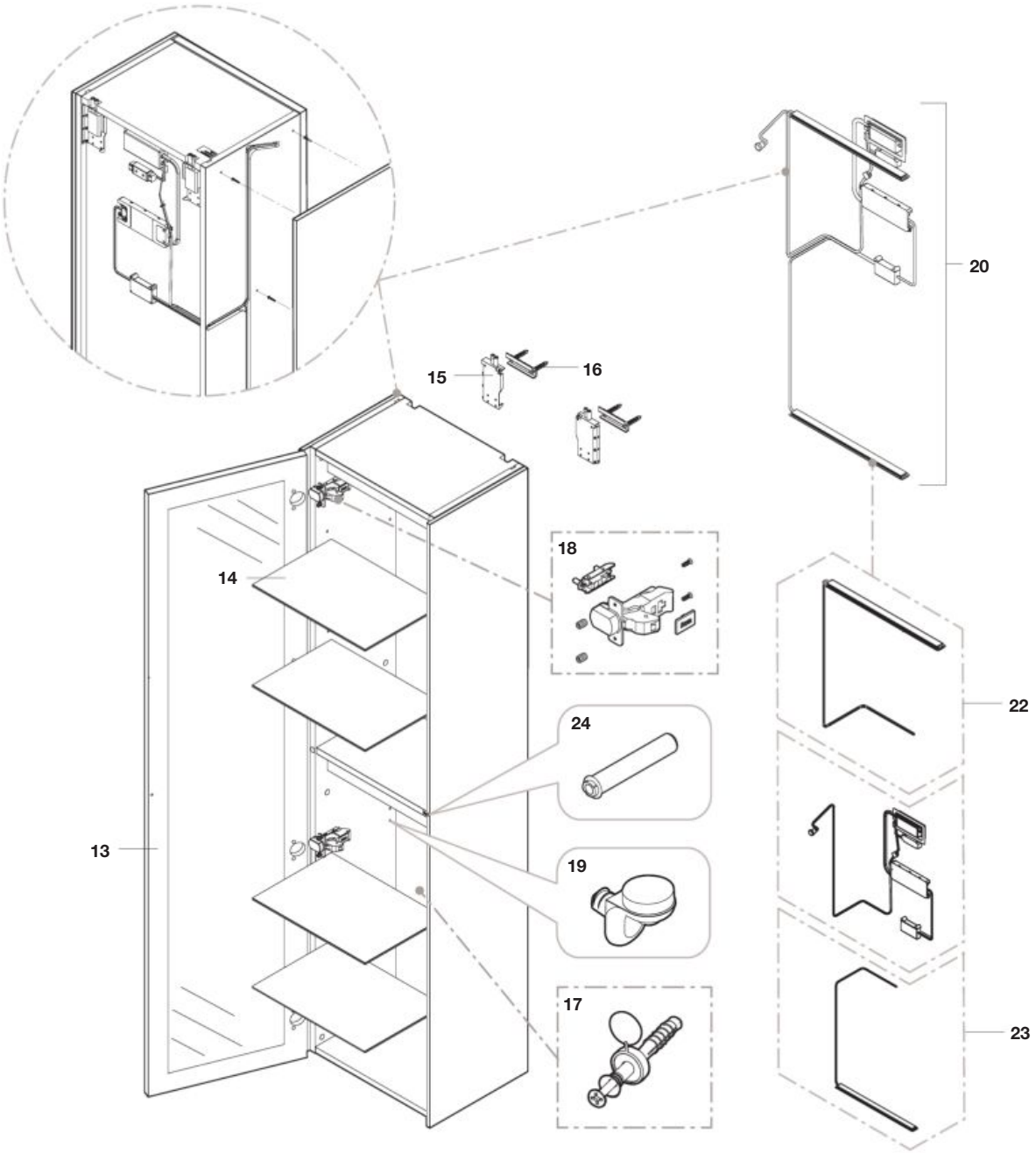

Las últimas posiciones de cada código indican el acabado (color):
In the product reference replace (...) with the code for the selected finish code:

Producto Product	Recambio Spare Part	Acabado Finished
806	**WHR**	**Blanco /** White
402	**OAR**	**Roble /** Oak
403	**DMR**	**Cristal fumato + roble /** Dark mirror + oak

			€
13		**AU00341DMR**	222,00
		AU00341OAR	407,00
		AU00341WHR	502,00
14		**AU0033400R**	26,00
15	+	**AU0034600R**	25,00
16	2 un		
17		**AU0013800R**	12,10

			€
18	2 un	**AU0039700R**	28,50
19	16 un	**AU0043400R**	17,50
20		**AU0033900R**	145,00
22		**AU0039600R**	124,00
23			
24		**AU0034300R**	13,60

Meridian In-Tank

Inodoro “L”, “I” / “L”, “I” Toilet bowl



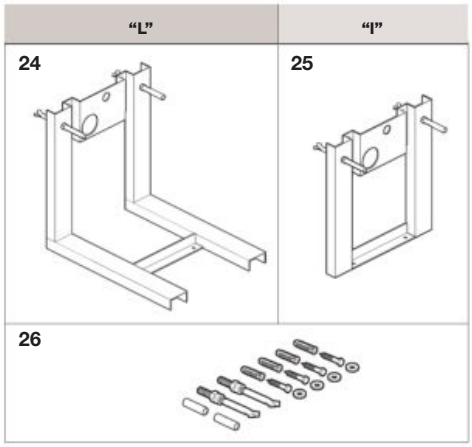

			€
1		**AV0009600R**	153,00
2	4 un		
3	2 un		
4			
2	4 un	**AV0011700R**	1,18
3	2 un	**AV0009700R**	0,95
4		**AV0009800R**	82,70
5		**AV0009900R**	179,00
6			
6		**AV0010000R**	111,00

		€
7	**AV0010200R**	91,70
8	**AV0010300R**	35,00
9		
10	**AV0010400R**	518,00
11	**AV0010600R**	532,00
13	**AV0010100R**	18,20
14	**AV0009200R**	78,50
15		
16	**AV0010500R**	9,44
17	**AV0009500R**	12,30

			€
18	**AV0009300R**		42,70
19			
24	**AV0010800R**	L	239,00
26			
25	**AV0011000R**	I	159,00
26			
26	**AV0011100R**		26,70
27	**AV0011400R**	L	22,30
	AV0011400R	I	22,30

Meridian In-Tank

Inodoro “FS” / Toilet bowl “FS”

A893303000
IN-TANK “FS”



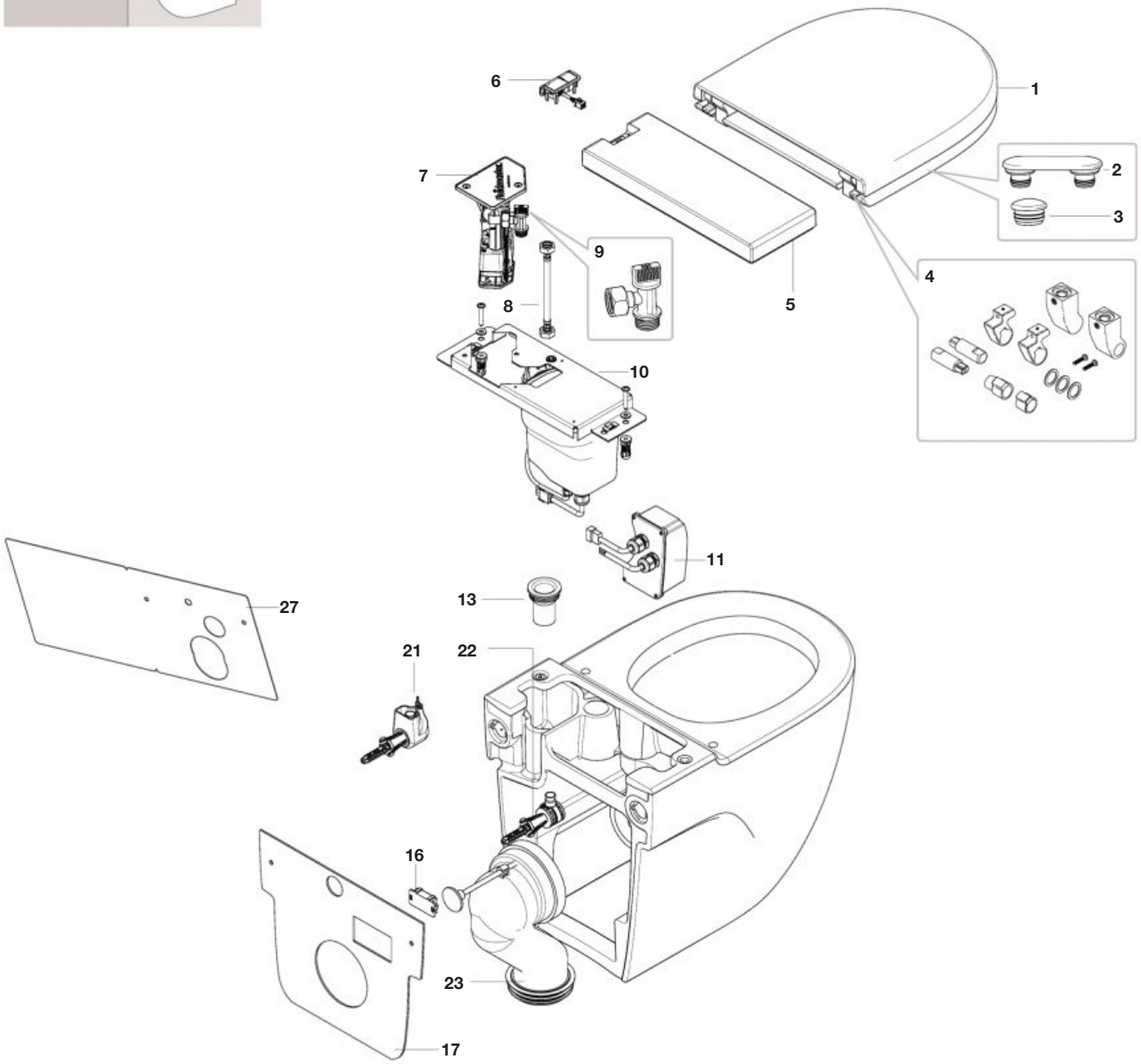

			€
1		**AV0009600R**	153,00
2	4 un		
3	2 un		
4			
2	4 un	**AV0011700R**	1,18
3	2 un	**AV0009700R**	0,95
4	+	**AV0009800R**	82,70
5		**AV0009900R**	179,00
6			
6		**AV0010000R**	111,00
7		**AV0010200R**	91,70

			€
8		**AV0010300R**	35,00
9			
10		**AV0010400R**	518,00
11		**AV0010600R**	532,00
13		**AV0010100R**	18,20
16		**AV0010500R**	9,44
17		**AV0009500R**	12,30
21		**AV0011200R** FS	101,00
22			
23		**AV0009300R**	42,70
27		**AV0011600R** FS	22,30

In-Wash® Insignia + In-Tank®

Inodoro suspendido rimless con asiento calefactado / Wall-hung toilet rimless with heated seat

IN-WASH INSIGNIA CON IN-TANK
SUSPENDIDO RIMLESS CON
ASIENTO CALEFACTADO
Wall-hung rimless with heated seat

A803104001

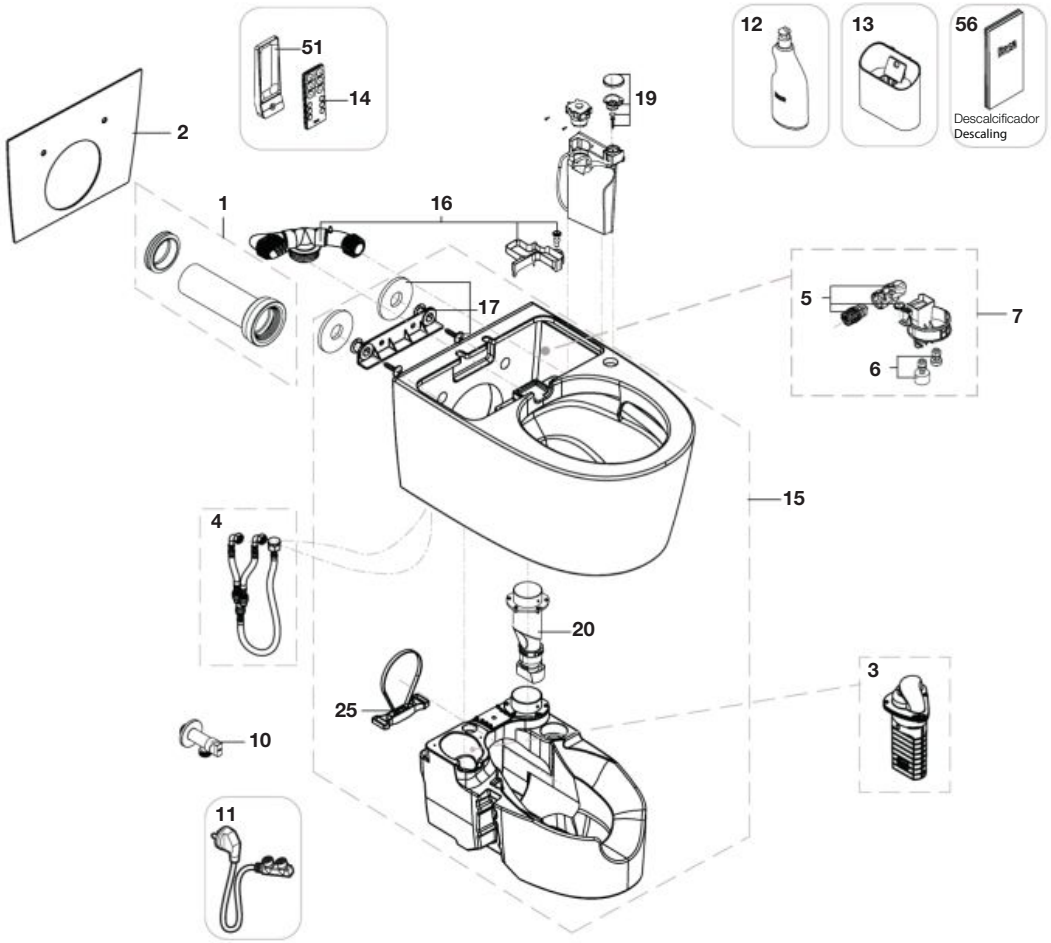



Recambios consumibles:
Consumable spare parts:

		€
12	**AT0026000R**	13,70
23	**AT0027000R**	25,30
56	**AT0018200R**	22,20

		€
1	**AT0021800R**	41,20
2	**AT0025700R**	4,33
3	**AT0025800R**	-
4	**AT0022100R**	82,00
5	**AT0022400R**	55,20
6	**AT0022500R**	32,50

		€
7	**AT0022300R**	108,00
10	**A525164500**	-
11	**AT0016200R**	14,30
13	**AT0026100R**	3,35
14	**AT0026200R**	82,70
15	**AT0026300R**	-

		€
16	**AT0026400R**	83,70
17	**AT0026500R**	4,27
19	**AT0026700R**	3,27
20	**AT0022700R**	26,80
25	**AT0022800R**	5,98
51	**AT0029300R**	81,70

In-Wash® Insignia + In-Tank®

Inodoro de pie rimless con asiento calefactado / Floorstanding toilet rimless with heated seat

IN-WASH INSIGNIA CON IN-TANK
DE PIE RIMLESS CON ASIENTO CALEFACTADO
Floorstanding rimless with heated seat

A803105001

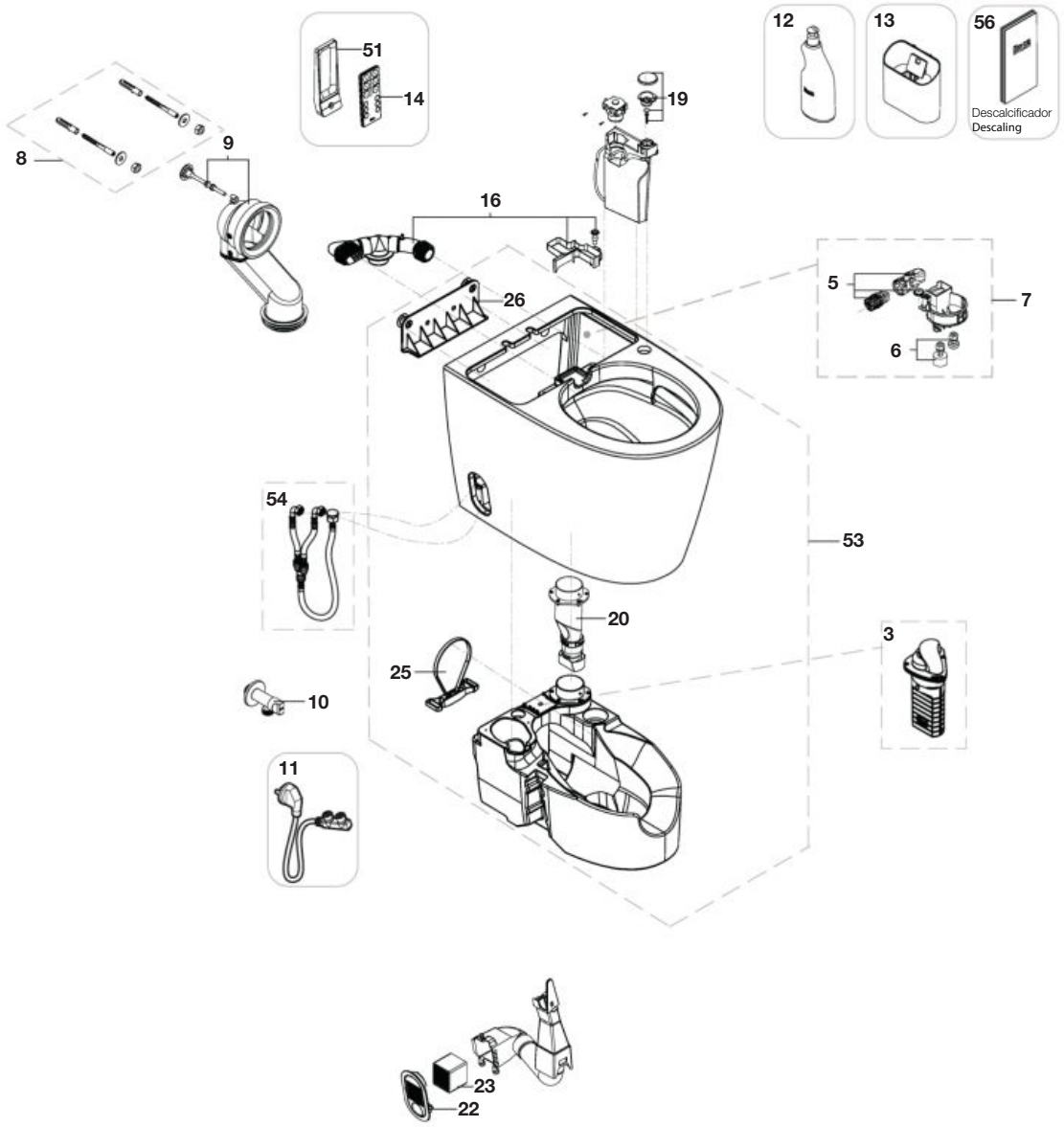

Recambios consumibles:
Consumable spare parts:

		€
12	**AT0026000R**	13,70
23	**AT0027000R**	25,30
56	**AT0018200R**	22,20

		€
3	**AT0025800R**	-
5	**AT0022400R**	55,20
6	**AT0022500R**	32,50
7	**AT0022300R**	108,00
8	**AT0025900R**	3,48
9	**AT0023100R**	18,50
10	**A525164500**	-

		€
11	**AT0016200R**	14,30
13	**AT0026100R**	3,35
14	**AT0026200R**	82,70
16	**AT0026400R**	83,70
19	**AT0026700R**	3,27
20	**AT0022700R**	26,80
22	**AT0026900R**	71,00

		€
25	**AT0022800R**	5,98
26	**AT0027200R**	6,57
51	**AT0029300R**	81,70
53	**AT0029500R**	-
54	**AT0022900R**	83,20

In-Wash® Insignia + In-Tank®

Asiento calefactado y tapa (componentes exteriores) / Heated seat and cover (exterior components)

IN-WASH INSIGNIA CON IN-TANK
SUSPENDIDO RIMLESS CON ASIENTO CALEFACTADO
Wall-hang rimless with heated seat

A803104001

IN-WASH INSIGNIA CON IN-TANK
DE PIE RIMLESS CON ASIENTO CALEFACTADO
Floorstanding rimless with heated seat

A803105001

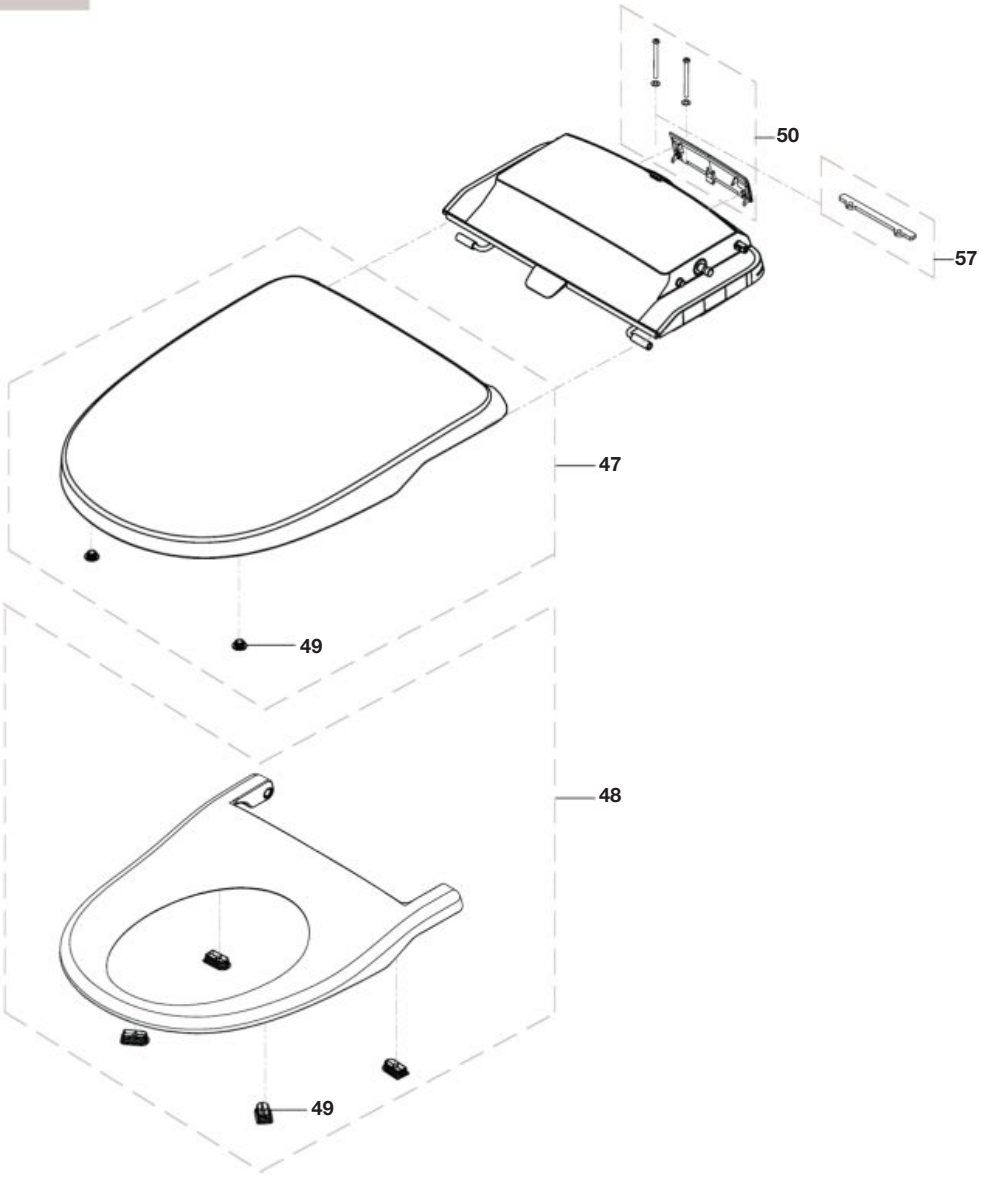

			€
47		**AT0028900R**	52,30
48		**AT0029000R**	168,00
49	6 un	**AT0029100R**	5,43
50		**AT0029200R**	10,30
57		**AT0037500R**	11,20

In-Wash® Inspira + In-Tank®

Inodoro suspendido / Wall-hung toilet bowl

A803094001

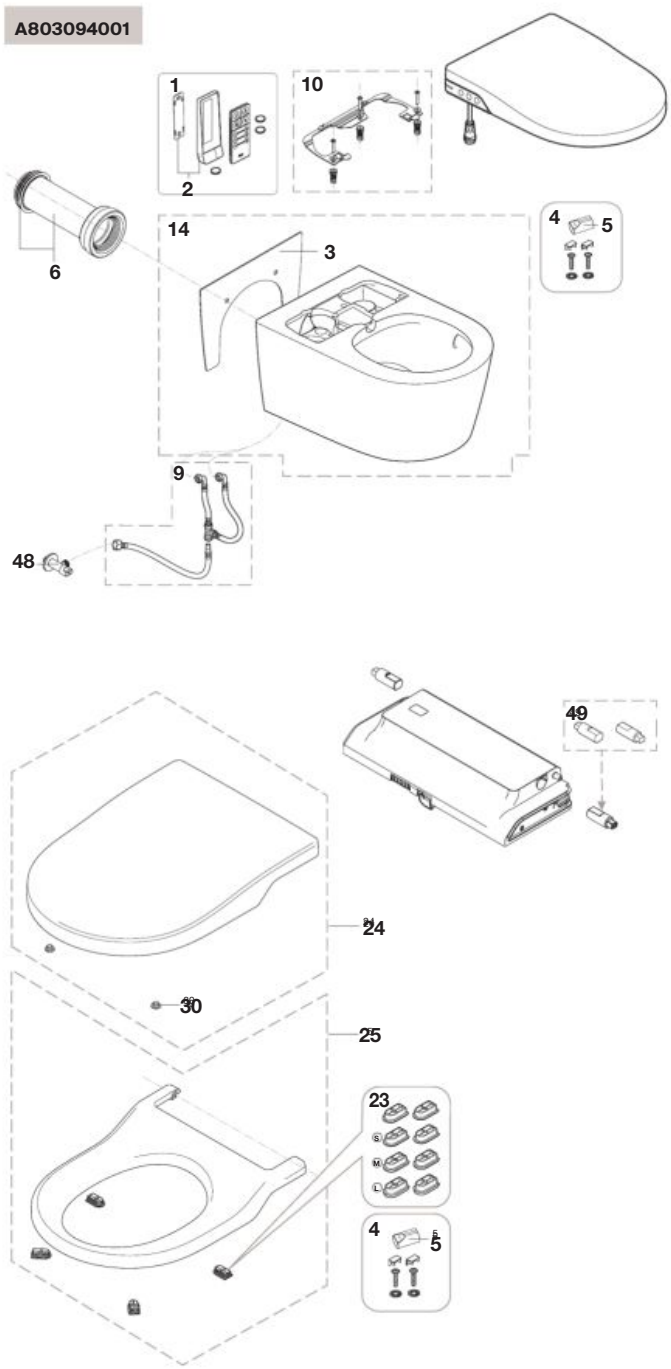

Inodoro de pie / Floorstanding toilet

A803095001



Producto acabado compatible:
Compatible finished products:

		€
48	**A525164500**	-

		€
1	**AT0021500R**	125,00
2	**AT0012800R**	45,50
3	**AT0021600R**	4,68
4	**AT0021700R**	6,18
5	**AT0020900R**	13,80
6	**AT0021800R**	41,20
9	**AT0022100R**	82,00

		€
10	**AT0022200R**	34,70
14	**AT0022600R**	-
17	**AT0022900R**	83,20
18	**AT0023000R**	-
19	**AT0023100R**	18,50
20	**AV0052100R**	8,23
21	**AT0023200R**	34,30

			€
22		**AV0013100R**	3,46
23		**AT0021200R**	10,70
24		**AT0010800R**	66,80
25		**AT0010900R**	71,20
30	2 un	**AI0000200R**	0,98
49	+	**AT0011100R**	47,20

In-Wash® Inspira

Inodoro suspendido / Wall-hung toilet bowl

A803060001

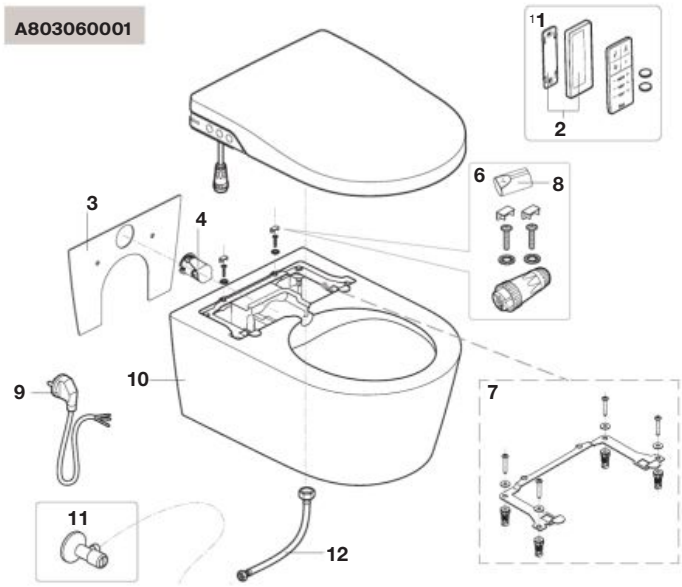

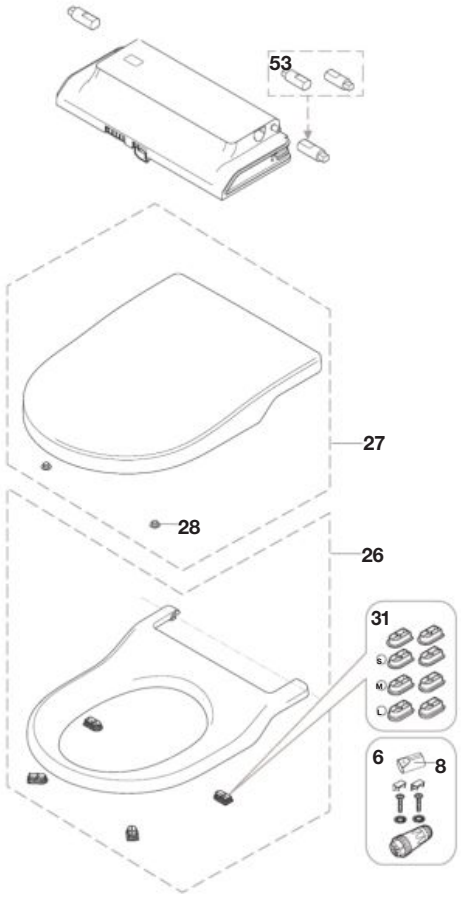

Inodoro de pie / Floorstanding toilet

A803061001

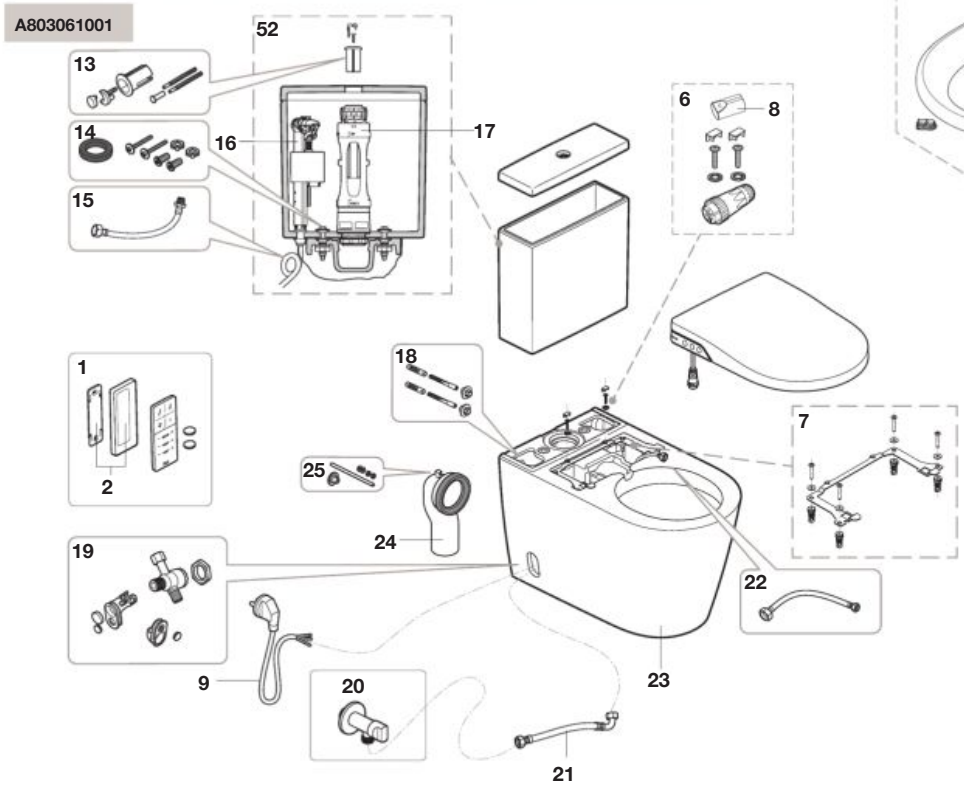

		€
1	**AT0010600R**	92,50
2	**AT0010700R**	32,50
3	**AT0018700R**	2,62
4	**AV0034100R**	3,58
6	**AT0021100R**	19,80
7	**AT0019100R**	44,70
8	**AT0020900R**	13,80
9	**AT0018800R**	6,63
10	**AT0013200R**	-
11	**AT0019200R**	18,80
12		

		€
13	**AH0001700R**	14,00
14	**AV0028800R**	17,30
15	**AG0141400R**	7,63
16	**AH0002800R**	20,90
17	**AH0000100R**	35,10
18	**AV0052100R**	8,23
19	**AT0019300R**	57,80
20	**AG0141300R**	12,00
21	**AG0141500R**	20,00
22		
23	**AT0019400R**	-

			€
24		**AV0007900R**	14,60
25		**AV0035400R**	4,80
26		**AT0010900R**	71,20
27		**AT0010800R**	66,80
28	2 un	**AI0000200R**	0,98
31		**AT0021200R**	10,70
52		**AT0019600R**	237,00
53	+	**AT0011100R**	47,20

In-Wash® Inspira

Inodoro adosado a pared / Attached to wall toilet

A803063001

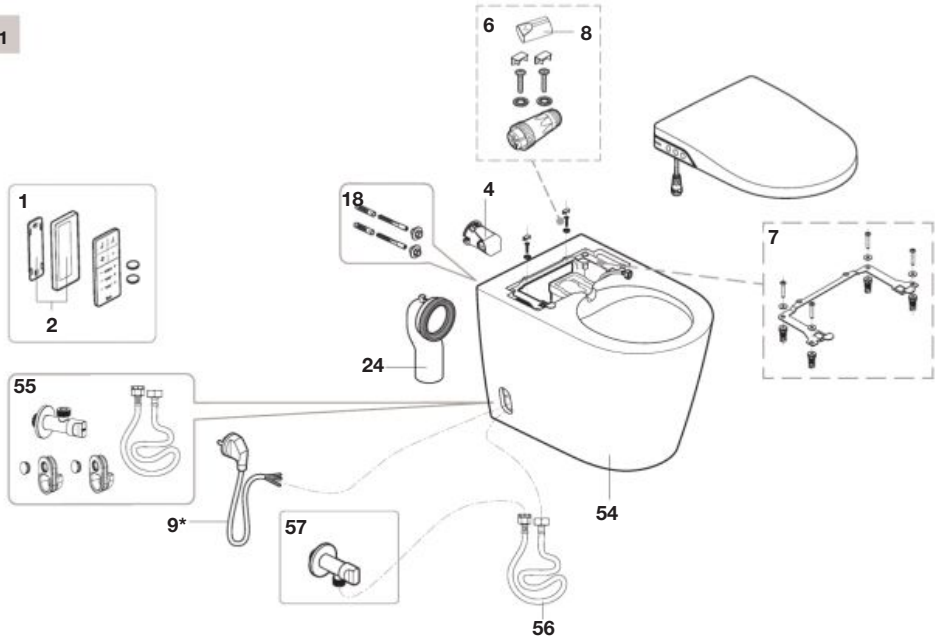

Inodoro de pie Rimless / Rimless floorstanding toilet

A80306L001

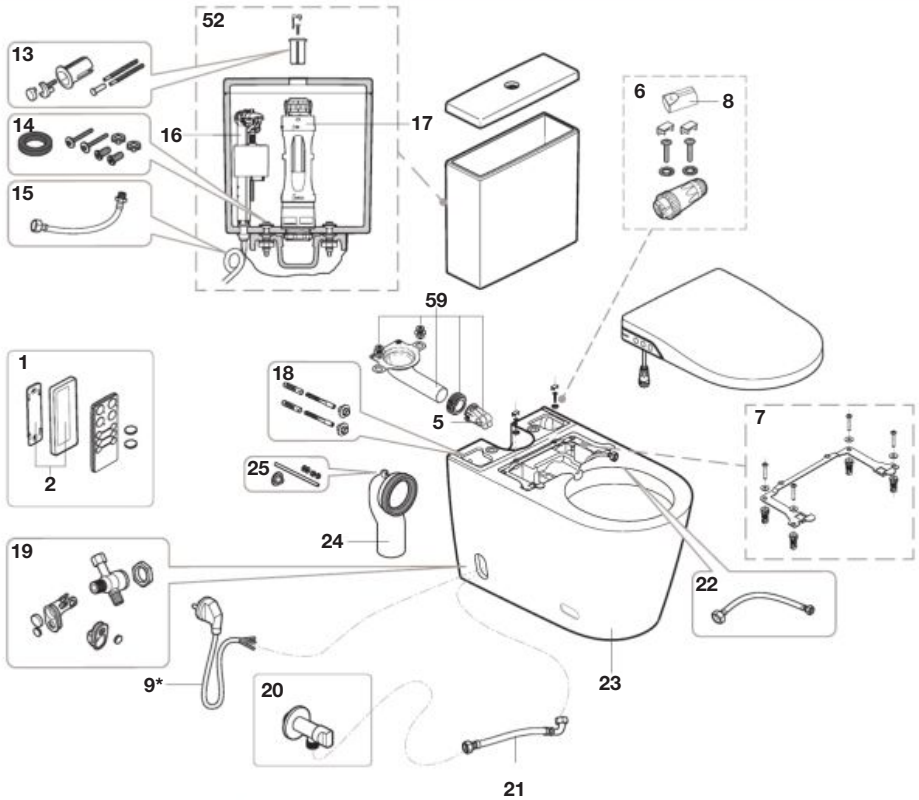

		€
1	**AT0010600R**	92,50
2	**AT0010700R**	32,50
4	**AV0034100R**	3,58
5	**AV0027000R**	3,77
6	**AT0021100R**	19,80
7	**AT0019100R**	44,70
8	**AT0020900R**	13,80
9	**AT0018800R**	6,63
13	**AH0001700R**	14,00
14	**AV0028800R**	17,30

			€
15	**AG0141400R**		7,63
16	**AH0002800R**		20,90
17	**AH0000100R**		35,10
18	**AV0052100R**		8,23
19	**AT0019300R**		57,80
20	**AG0141300R**		12,00
21	**AG0141500R**	3/8" H - 3/8" H	20,00
22		1/2" H - 3/4" H	
23	**AT0019400R**		-
24	**AV0007900R**		14,60

		€
25	**AV0035400R**	4,80
52	**AT0019600R**	237,00
54	**AT0017300R**	-
55	**AT0017600R**	59,70
56	**AT0017700R**	18,80
57	**A525164500**	-
58	**AV0027000R**	3,77
59	**AT0017000R**	8,38

In-Wash® Ona

Inodoro de pie Rimless / Rimless floorstanding toilet

IN-WASH ONA DE PIE RIMLESS **Floorstanding rimless**
A803151S01

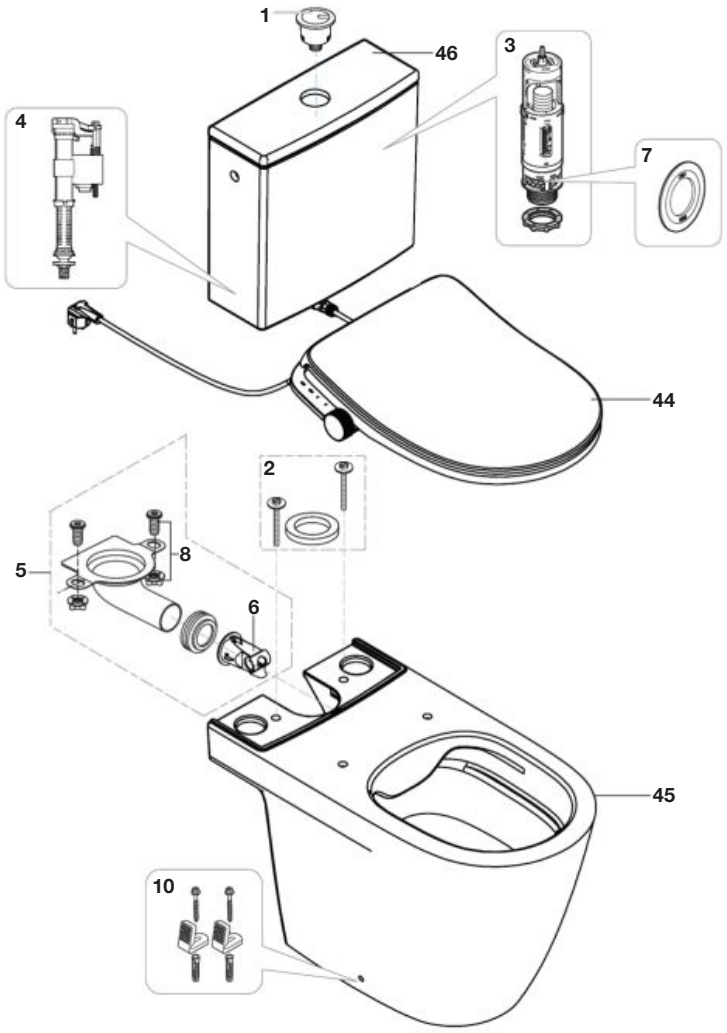

Admite (no incluido) / Admits (not included)

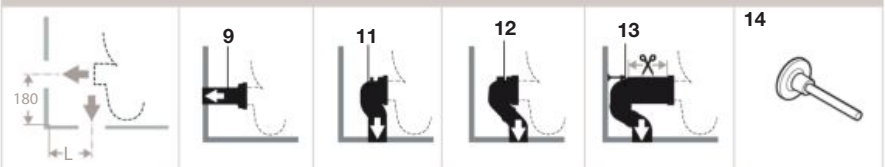

L=	225	210	270	Min. 95- Max. 165

			€
1		**AH0011300R**	14,50
2		**AV0036000R**	10,20
5		**AV0060000R**	15,50
6		**AV0059800R**	7,59
7		**AH0011400R**	6,42
8	2 un	**AV0037200R**	15,90

		€
9	**AV0009300R**	42,70
10	**AV0026800R**	9,95
11	**AV0007900R**	14,60
12	**AV0007700R**	14,60
13	**AV0007000R**	46,10
14	**AV0035400R**	4,80

Producto acabado compatible:
Compatible finished products:

		€
3	**A822505500**	-
4	**A822504400**	-
44	**A804053001**	-
45	**A342689000**	-
46	**A341681000**	-

In-Wash® Ona

Inodoro adosado a pared / Attached to wall toilet

IN-WASH ONA **A PARED DE PIE RIMLESS** BACK TO WALL FLOORSTANDING RIMLESS
A803153S01

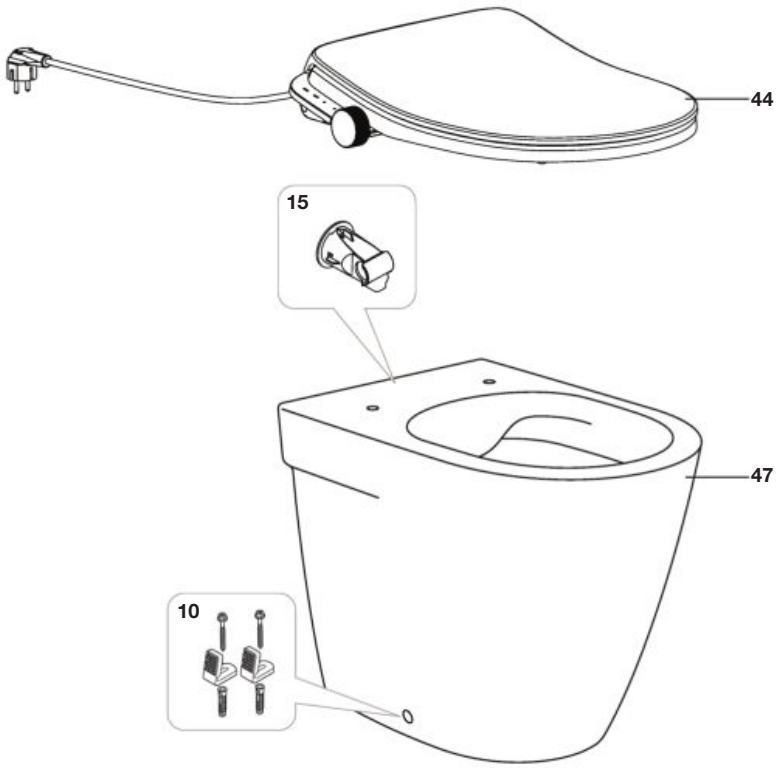

Admite (no incluido) / Admits (not included)

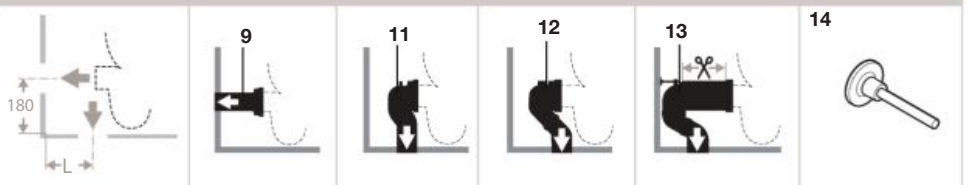

L=	95	90	150	Min. 95- Max. 165

		€
9	**AV0009300R**	42,70
10	**AV0026800R**	9,95
11	**AV0007900R**	14,60
12	**AV0007700R**	14,60
13	**AV0007000R**	46,10
14	**AV0035400R**	4,80
15	**AV0060400R**	7,59

Producto acabado compatible:
Compatible finished products:

		€
44	**A804053001**	-
47	**A347688000**	-

In-Wash® Ona

Inodoro suspendido / Wall-hung toilet bowl

IN-WASH ONA
SUSPENDIDO RIMLESS
Wall-hung rimless

A803150S01

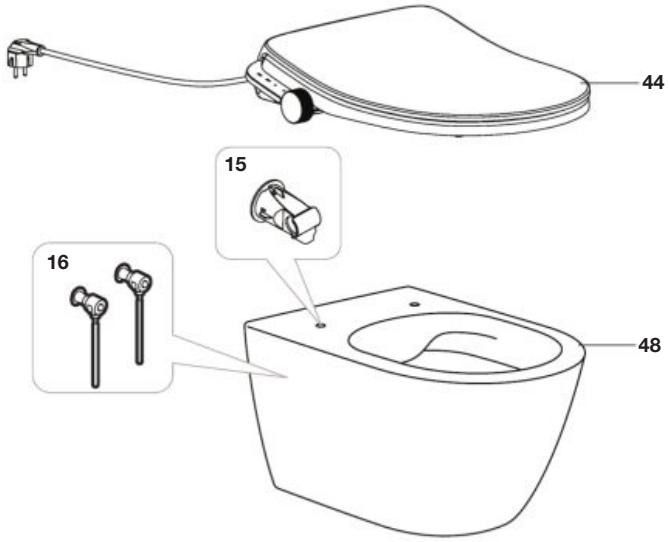

Admite / Admits

14



IN-WASH ONA
DE PIE RIMLESS
Floorstanding rimless

A803151S01

IN-WASH ONA
A PARED DE PIE RIMLESS
Back to wall floorstanding rimless

A803153S01

IN-WASH ONA
SUSPENDIDO RIMLESS
Wall-hung rimless

A803150S01

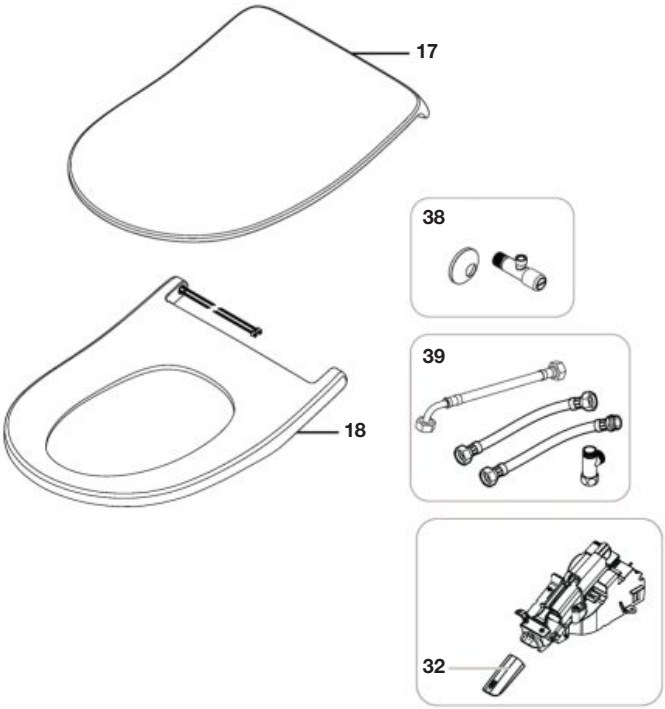

		€
9	**AV0009300R**	42,70
11	**AV0007900R**	14,60
12	**AV0007700R**	14,60
13	**AV0007000R**	46,10
14	**AV0012400R**	34,80
15	**AV0060400R**	7,59

		€
16	**AV0058400R**	42,40
17	**AT0031900R**	35,20
18	**AT0032000R**	31,80
32	**AT0033400R**	1,17
38	**AT0021400R**	59,00
39	**AT0034700R**	N.D.

Producto acabado compatible:
Compatible finished products:

		€
44	**A804053001**	-
48	**A34668B000**	-

Multiclean®

Multiclean® Premium 2.2

A804006001	ROUND
A804007001	SQUARE
A804008001	SOFT

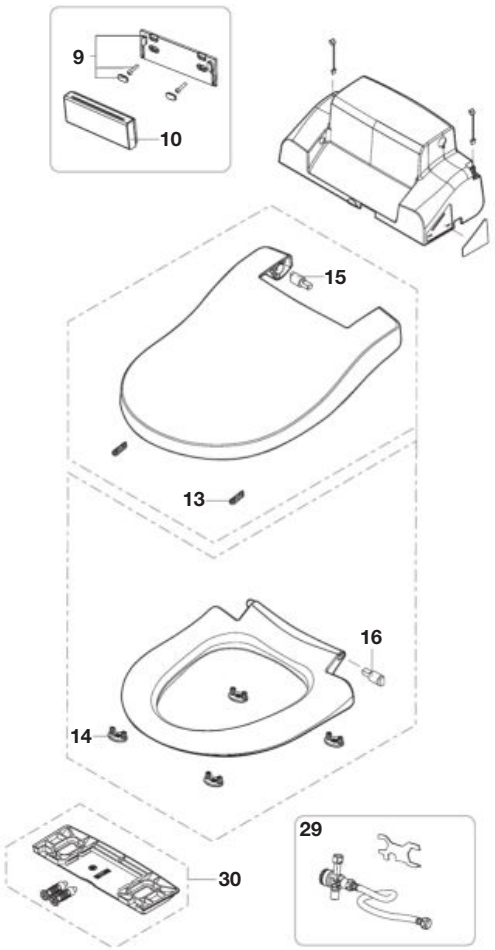

Multiclean® Advance 2.2

A804001001	ROUND
A804002001	SQUARE
A804004001	SOFT

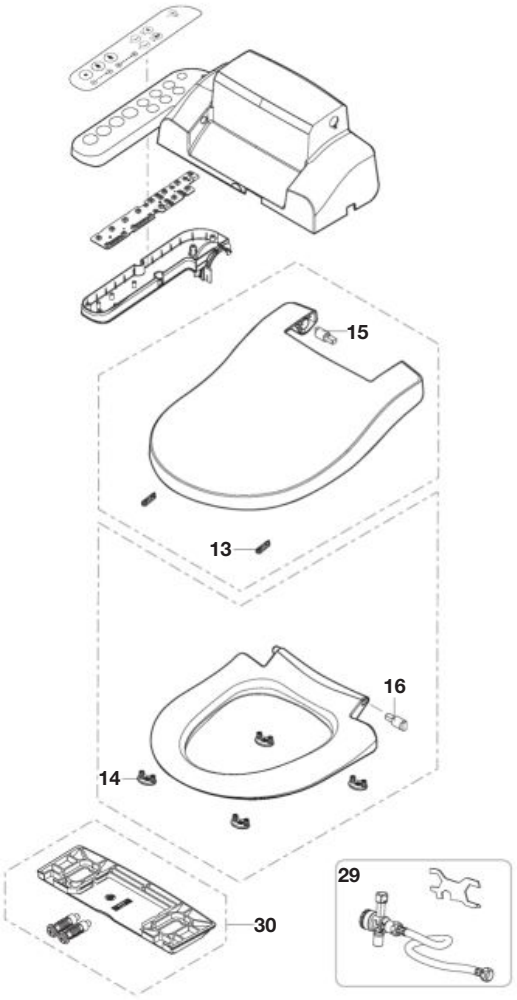

			€
9		**AT0015500R**	4,05
10		**AT0015400R**	136,00
13	2 un	**AT0016400R**	6,27
14	4 un		

			€
15	+	**AT0014700R**	24,30
16	+		
29		**AT0016600R**	30,00
30		**AT0016500R**	9,18

Multiclean®

Multiclean M3

MULTICLEAN M3 MULTICLEAN M3	
A804052001	ROUND

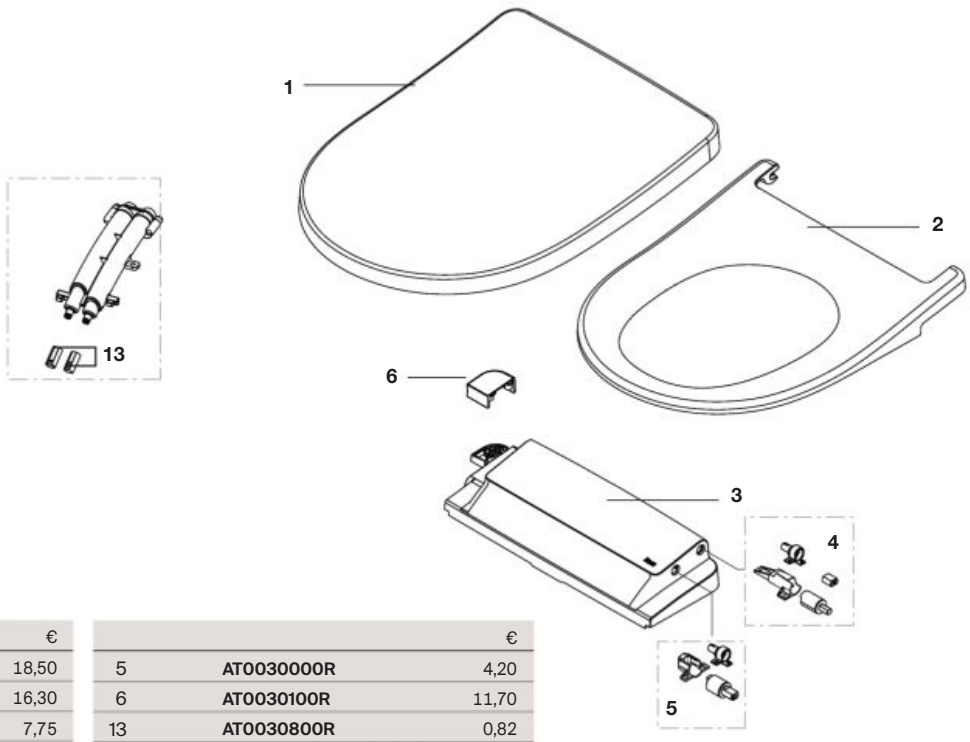

		€
1	**AT0029600R**	18,50
2	**AT0029700R**	16,30
3	**AT0029800R**	7,75
4	**AT0029900R**	10,20

		€
5	**AT0030000R**	4,20
6	**AT0030100R**	11,70
13	**AT0030800R**	0,82

Multiclean M4

MULTICLEAN M4 MULTICLEAN M4	
A804054001	ROUND

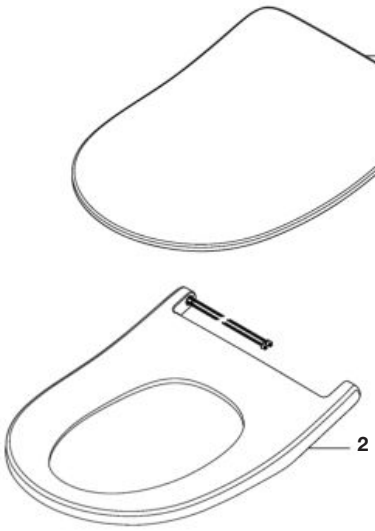



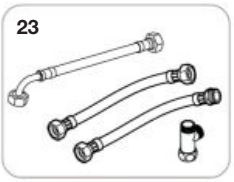



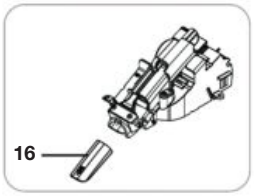

		€
1	**AT0031900R**	35,20
2	**AT0032000R**	31,80
16	**AT0033400R**	1,17
22	**AT0021400R**	59,00
23	**AT0034000R**	26,30

Recambios consumibles:
Consumable spare parts:

		€
27	**AT0018200R**	22,20

Dama-N

Lavabo / Washbasin

A327780000	1000 x 460
A327781000	850 x 460
A327782000	700 x 460
A327783000	650 x 460
A327784000	600 x 460
A327786000	550 x 460

A327785000	600 x 320
A327787000	550 x 320
A327788000	500 x 320
A327789000	450 x 320
A32778A000	400 x 320
A32778B000	350 x 320
A32778C000	650 x 500 angular

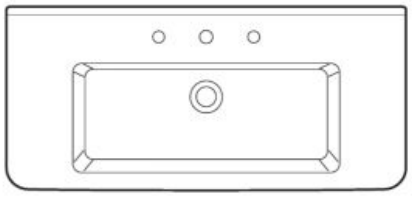

1

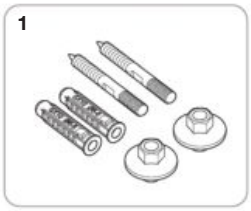

Lavabo semi-empotrar / Semi-recessed washbasin

A32778S000

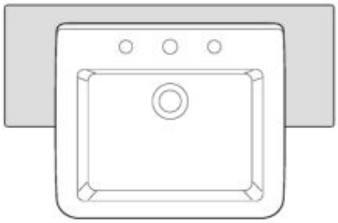

12



Admite (no incluido) / Admits (not included)

2



4



3/5



6



7

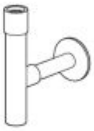

8

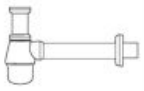



A337780..0



A337781..0



A337782..0

			€
1	**AV0007500R**		5,51
12	**AV0010900R**	semi-empotrar	5,53

Admite (no incluido)
Admits (not included)

			€
2	**A525021200**	automático / automatic	31,20
3	**AG0055800R**	automático / automatic	14,40
4	**A505400000**	Novatic	38,40
5	**AG0077100R**	Novatic	40,60
6	**AG0078200R**		30,90
7	**A506403110**		-
8	**A506401614**		30,30

COMPATIBILIDAD PEDESTAL / SEMIPEDESTAL **Compatibility pedestal / semipedestal**		WB-Ped A337780..0	WB-SPed A337781..0	WB-SPed S A337782..0
WB WH 1000 x 460	**A327780..0**	•	•	-
WB WH 850 x 460	**A327781..0**	•	•	-
WB WH 700 x 460	**A327782..0**	•	•	-
WB WH 650 x 460	**A327783..0**	•	•	-
WB WH 600 x 460	**A327784..0**	•	•	-
WB WH 550 x 460	**A327786..0**	•	•	-
WB WH 600 x 320 CPT	**A327785..0**	-	-	•
WB WH 550 x 320 CPT	**A327787..0**	-	-	•
WB WH 500 x 320 CPT	**A327788..0**	-	-	•
WB WH 450 x 320 CPT	**A327789..0**	-	-	•
WB WH 400 x 320 CPT	**A32778A..0**	-	-	•
WB WH 350 x 320 CPT	**A32778B..0**	-	-	•

Dama-N

Semi-pedestales / Semi-pedestals

A337781000

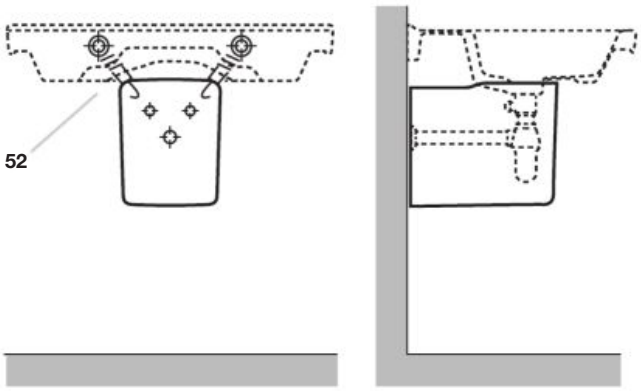

A337782000

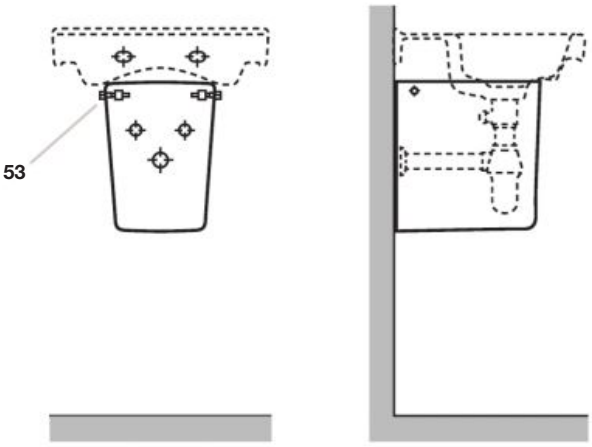

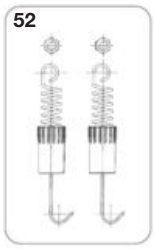

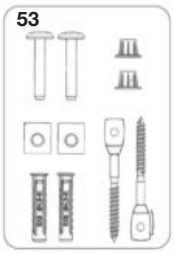

		€
52	**AV0015900R**	8,02
53	**AV0007600R**	3,80

COMPATIBILIDAD PEDESTAL / SEMIPEDESTAL **Compatibility pedestal / semipedestal**		**WB-Ped A337780..0**	**WB-SPed A337781..0**	**WB-SPed S A337782..0**
WB WH 1000 x 460	**A327780..0**	•	•	-
WB WH 850 x 460	**A327781..0**	•	•	-
WB WH 700 x 460	**A327782..0**	•	•	-
WB WH 650 x 460	**A327783..0**	•	•	-
WB WH 600 x 460	**A327784..0**	•	•	-
WB WH 550 x 460	**A327786..0**	•	•	-
WB WH 600 x 320 CPT	**A327785..0**	-	-	•
WB WH 550 x 320 CPT	**A327787..0**	-	-	•
WB WH 500 x 320 CPT	**A327788..0**	-	-	•
WB WH 450 x 320 CPT	**A327789..0**	-	-	•
WB WH 400 x 320 CPT	**A32778A..0**	-	-	•
WB WH 350 x 320 CPT	**A32778B..0**	-	-	•

Dama-N

Taza tanque bajo salida horizontal / Close-coupled WC suite with horizontal outlet

A342787000

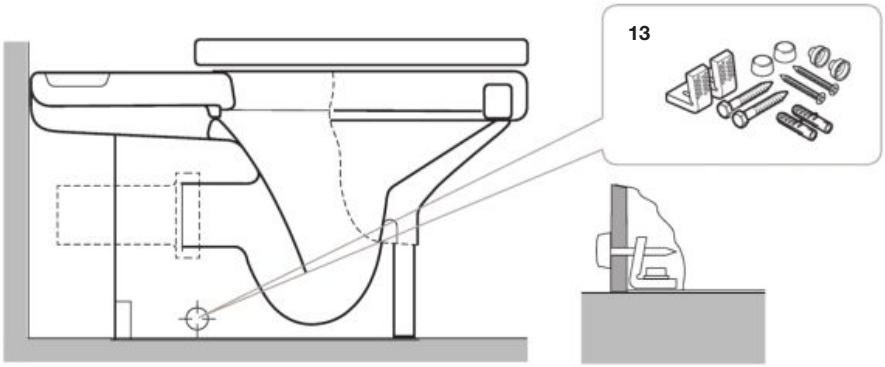

Admite (no incluido) / Admits (not included)

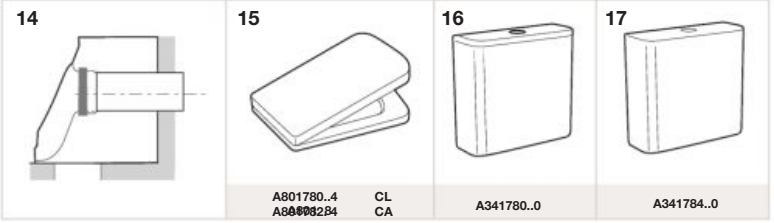

CL: Caída libre / standard closing
CA: Caída amortiguada / soft-closing

		€
13	**AV0009400R**	6,16
14	**AV0012400R**	34,80

Admite (no incluido)
Admits (not included)

		€
15	**A801780..4**	-
	A801782..4	-
16	**A341780..0**	-
17	**A341784..0**	-

Taza tanque bajo salida vertical / Close-coupled WC suite with vertical outlet

A342788000

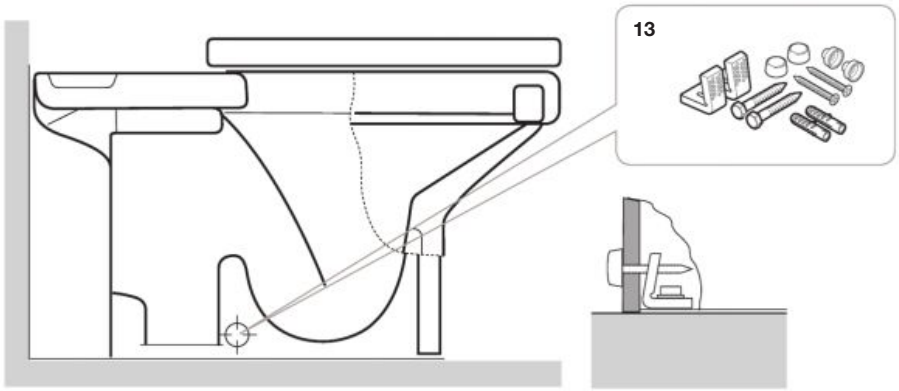

Admite (no incluido) / Admits (not included)

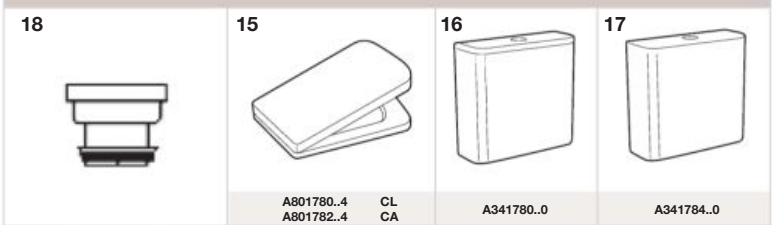

CL: Caída libre / standard closing
CA: Caída amortiguada / soft-closing

		€
13	**AV0009400R**	6,16
18	**AV0007800R**	8,11

Admite (no incluido)
Admits (not included)

		€
15	**A801780..4**	-
	A801782..4	-
16	**A341780..0**	-
17	**A341784..0**	-

Dama-N

Taza tanque bajo Compact salida dual (BTW) / Close-coupled compact bowl with dual outlet (BTW)

A34278W000

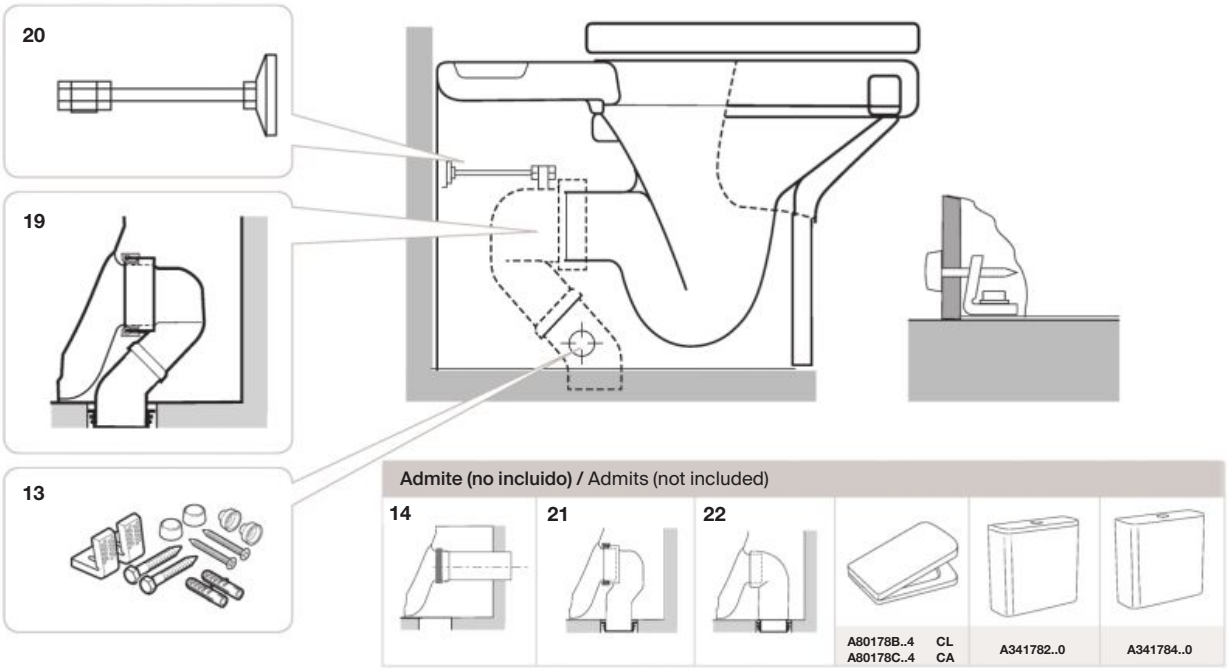

CL: Caída libre / standard closing
CA: Caída amortiguada / soft-closing

		€
13	**AV0009400R**	6,16
14	**AV0012400R**	34,80
19	**AV0007700R**	14,60

		€
20	**AV0013100R**	3,46
21	**AV0007900R**	14,60
22	**AV0013000R**	32,30

Taza tanque bajo Compact salida dual (BTW) / Close-coupled compact bowl with dual outlet (BTW)

A34278L..0

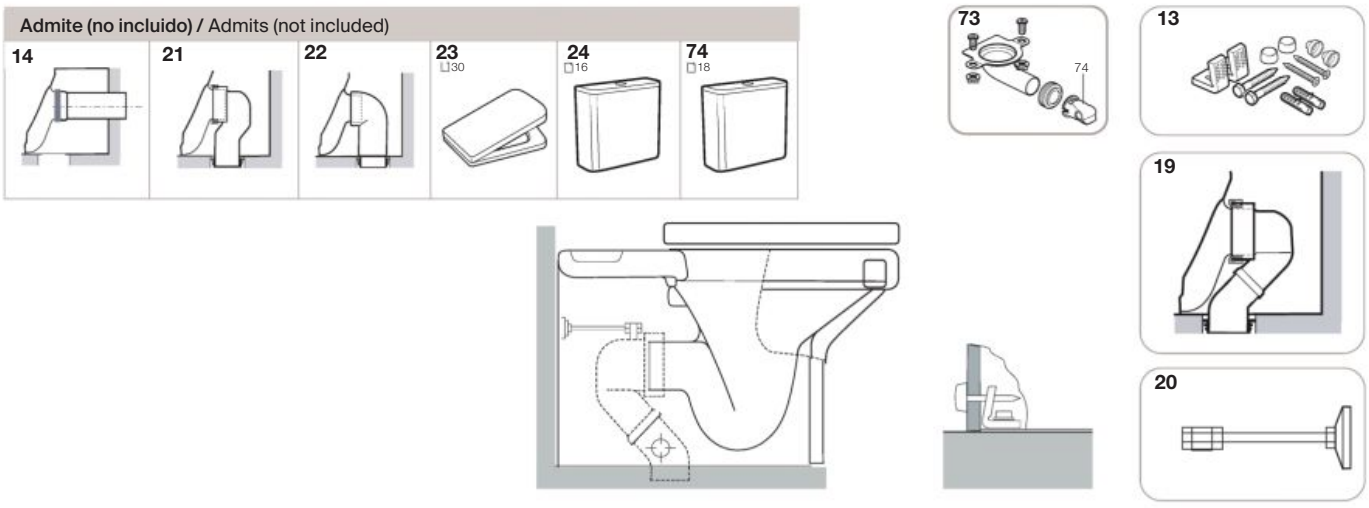

CL: Caída libre / standard closing
CA: Caída amortiguada / soft-closing

		€
13	**AV0009400R**	6,16
14	**AV0012400R**	34,80
19	**AV0007700R**	14,60

			€
20	**AV0013100R**	10 un.	3,46
21	**AV0007900R**		14,60
22	**AV0013000R**		32,30

		€
73	**AV0037500R**	15,60
74	**AV0027000R**	3,77

Producto acabado compatible:
Finished product compatible:

		€
23	**A80178B..4**	-
	A80178C..4	-
24	**A341782..0**	-
72	**A341786..0**	-

Dama-N

Taza tanque alto empotrable o fluxor (BTW) / Back-to-wall WC with dual outlet

A347787000

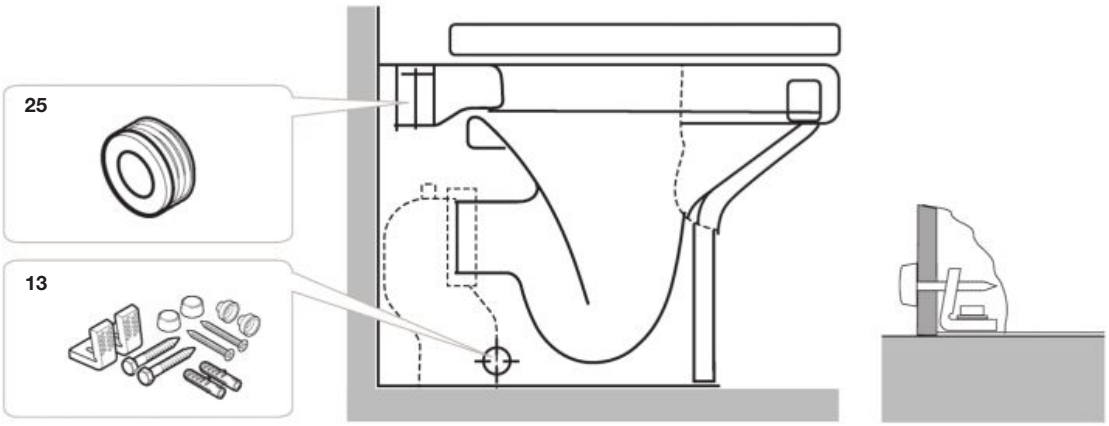

Admite (no incluido) / Admits (not included)

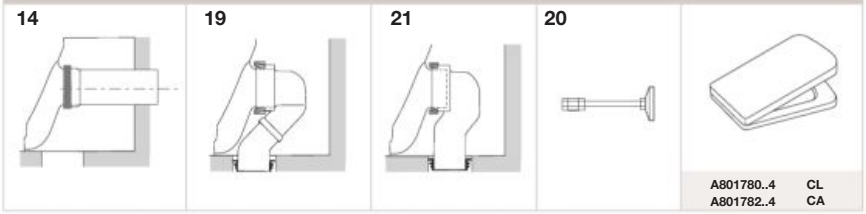

CL: Caída libre / standard closing
CA: Caída amortiguada / soft-closing

		€
13	**AV0009400R**	6,16
14	**AV0012400R**	34,80
19	**AV0007700R**	14,60

		€
20	**AV0013100R**	3,46
21	**AV0007900R**	14,60
25	**AV0016200R**	2,63

Dama-N

Tanque con tapa y mecanismo doble pulsador 4,5/3 L / Dual flush 4.5/3L WC cistern with cover

A341780000

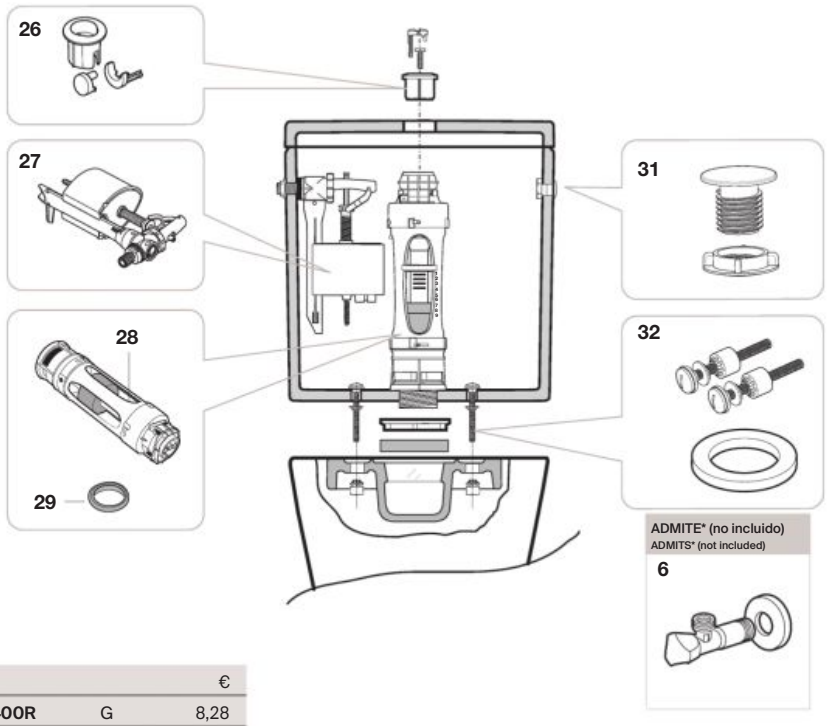

G: Kit genérico, 4 juntas de diferentes series
G: Generic kit, 4 different series joints

		€
6	**AG0078200R**	30,90
26	**AH0001800R**	13,30
27	**A822508800**	16,90
28	**AH0000100R**	35,10

			€
29	**AH0001400R**	G	8,28
29	**AH0007200R**		1,72
31	**AV0012600R**		2,54
32	**AV0012500R**		5,94

Tanque Compact con tapa y mecanismo doble pulsador 4,5/3 L / Dual flush 4.5/3L WC compact cistern with cover

A341782000

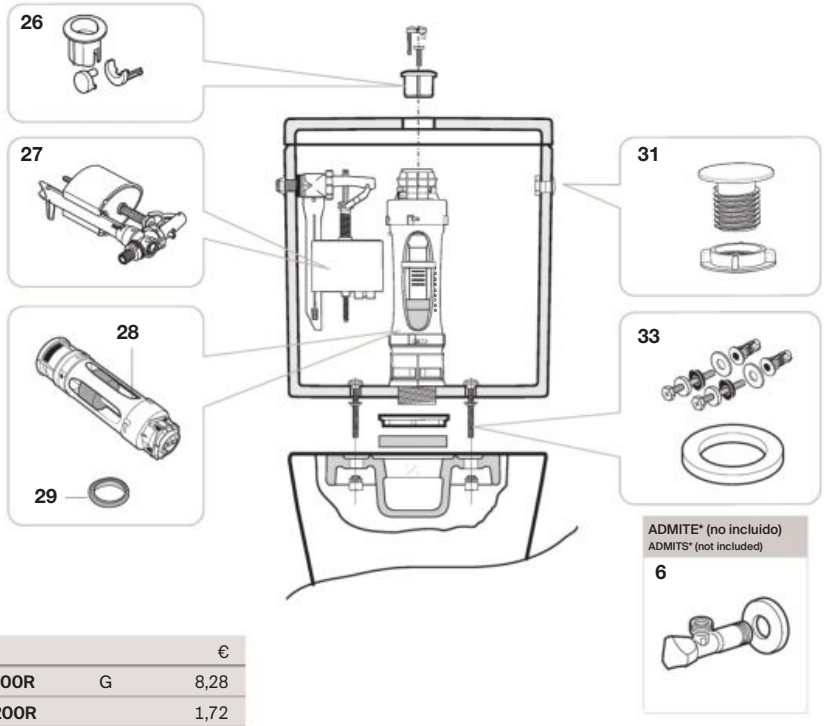

G: Kit genérico, 4 juntas de diferentes series
G: Generic kit, 4 different series joints

		€
6	**AG0078200R**	30,90
26	**AH0001800R**	13,30
27	**A822508800**	16,90
28	**AH0000100R**	35,10

			€
29	**AH0001400R**	G	8,28
29	**AH0007200R**		1,72
31	**AV0012600R**		2,54
33	**AV0013200R**		13,70

Dama-N

Taza compacto con tapa y mecanismo doble pulsador 4,5/3L /
Compact cistern with lid and 4,5/3L push-buttom mechanism

A341786..0

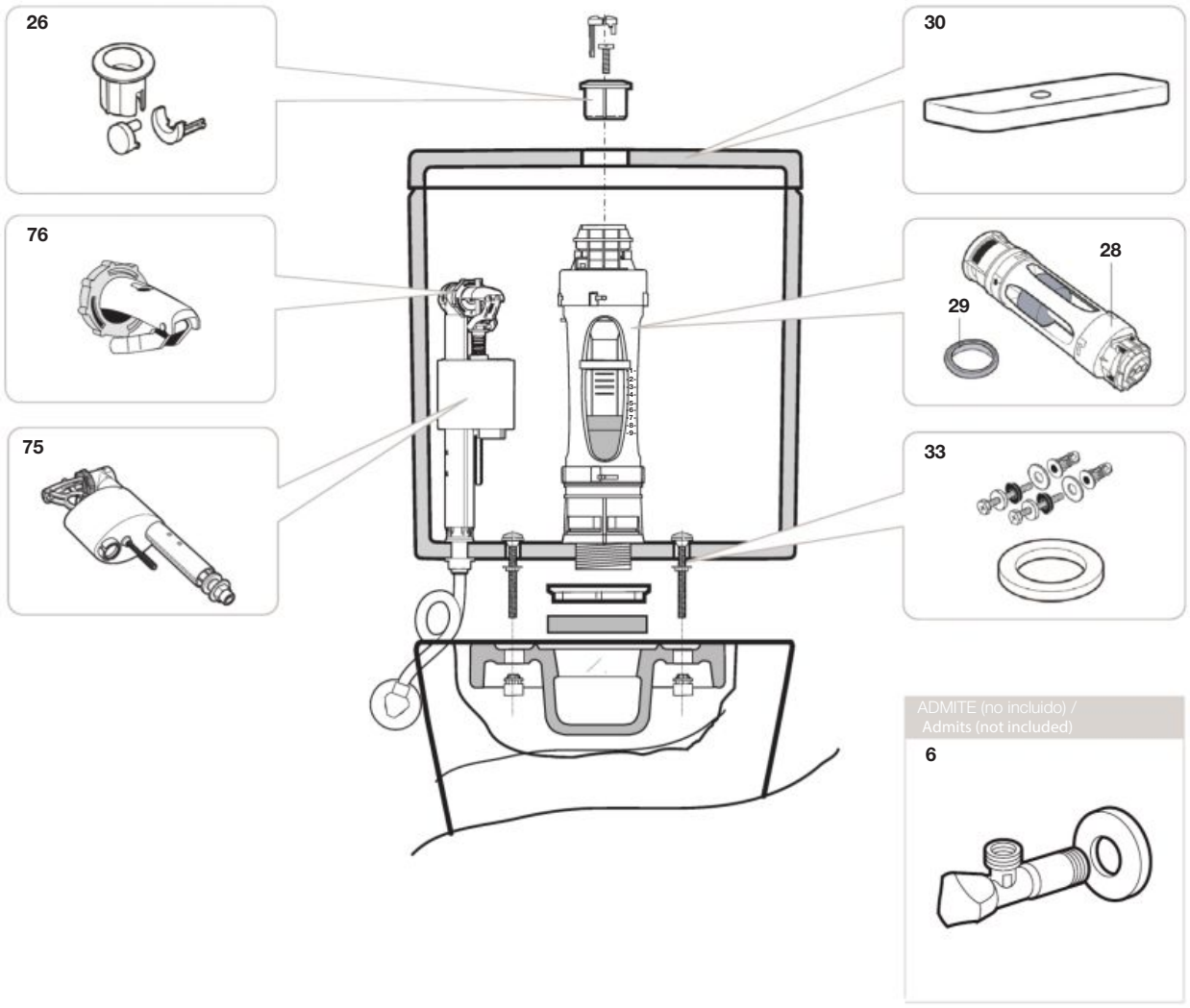

G: Kit genérico, 4 juntas de diferentes series
G: Generic kit, 4 different series joints

		€
6	**AG0078200R**	30,90
	AG0078300R	35,60
26	**AH0001800R**	13,30
28	**AH0000100R**	35,10
29	**AH0001400R**	8,28

			€
29	**AH0007200R**	20 un.	1,72
30	**AV00158..R**		-
33	**AV0013200R**		13,70
75	**AH0001000R**		N.D.
76	**AH0012500R**		3,94

Dama-N

Tanque sin tapa y mecanismo doble pulsador 4,5/3 L / Dual flush 4.5/3L WC cistern without cover

A341784000

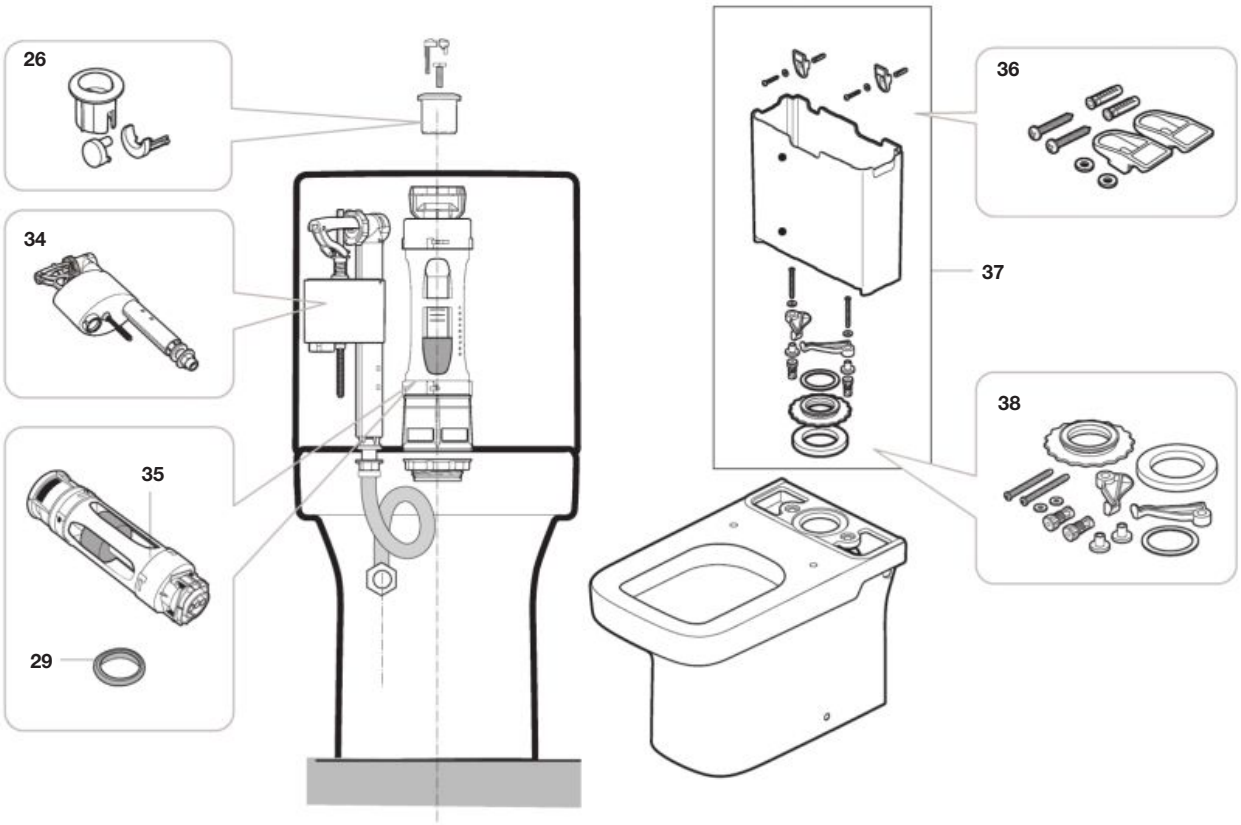

ADMITE* (no incluido)
ADMITS* (not included)



G: Kit genérico, 4 juntas de diferentes series
G: Generic kit, 4 different series joints

			€
6	**AG0078200R**		30,90
26	**AH0001800R**		13,30
29	**AH0001400R**	G	8,28
29	**AH0007200R**		1,72
34	**A822508900**		-
35	**AH0000100R**		35,10

		€
36	**AV0012900R**	5,35
36		
37	**AV0012800R**	20,50
38		
38	**AV0012700R**	13,90

Dama-N

Taza suspendida / Vitreous china wall-hung WC

A346787000

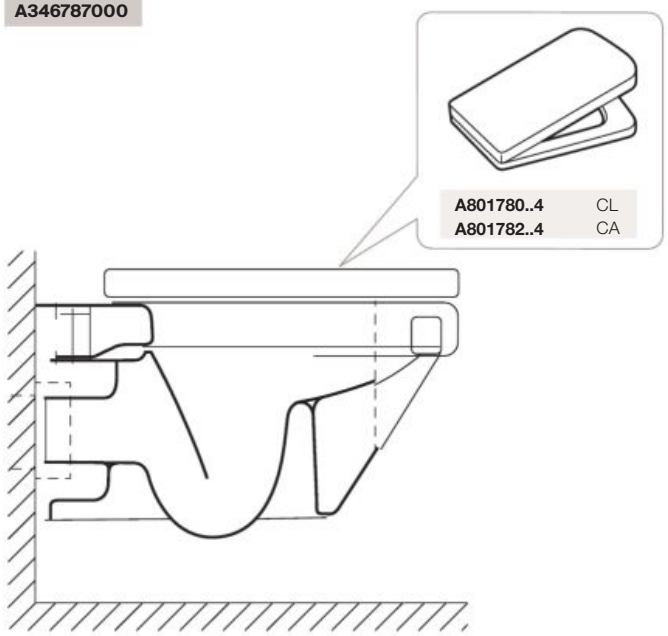

A346788000 Compact

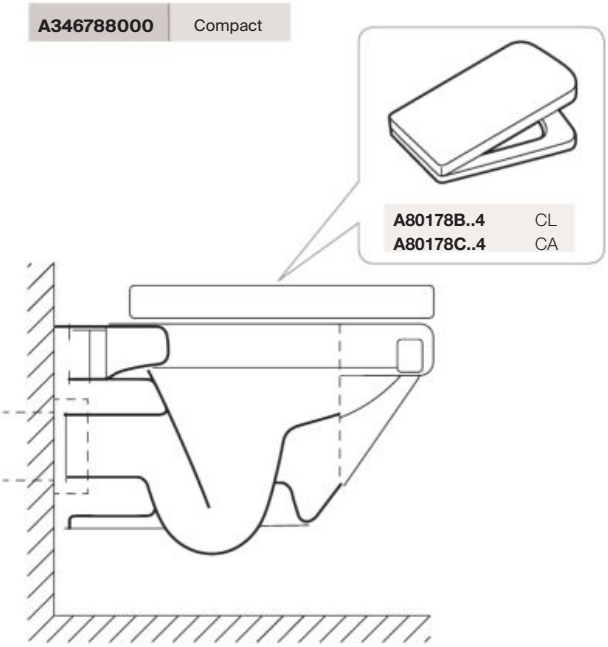

Admite (no incluido) / Admits (not included)

14



39

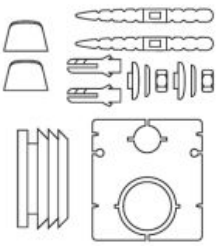

54



25



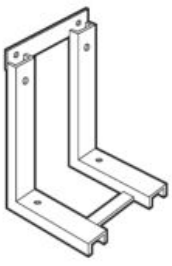

A822091001

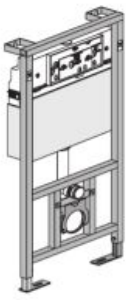

A890090000



A526901410

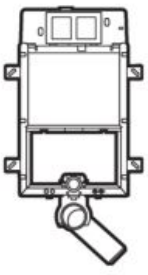

A890090100

CL: Caída libre / standard closing
CA: Caída amortiguada / soft-closing

		€
14	**AV0012400R**	34,80
25	**AV0016200R**	2,63

		€
39	**AV0013600R**	14,40
54	**AV0002900R**	24,70

Dama-N

Bidé / Bidet

A357784000

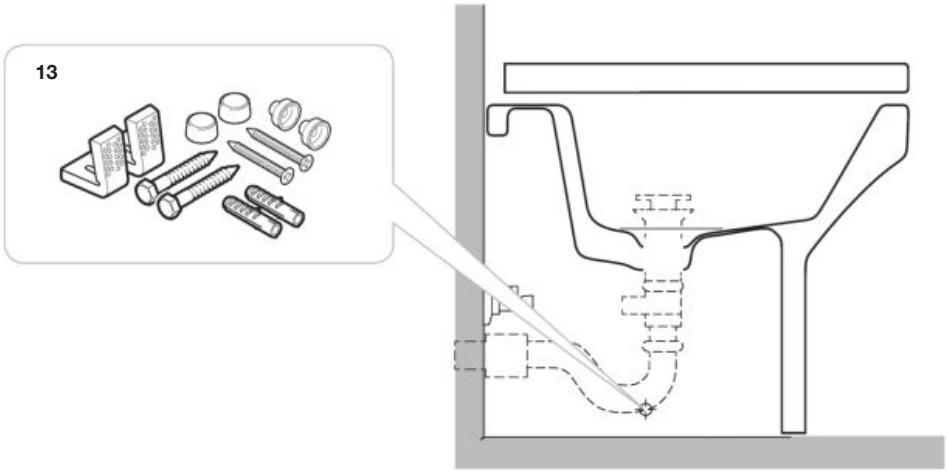

CL: Caída libre / standard closing
CA: Caída amortiguada / soft-closing

		€
2	**A525021200**	31,20
3	**AG0055800R**	14,40
6	**AG0078200R**	30,90
13	**AV0009400R**	6,16
45	**AV0013400R**	6,03
46	**A506402210**	33,60

Admite (no incluido) / Admits (not included)

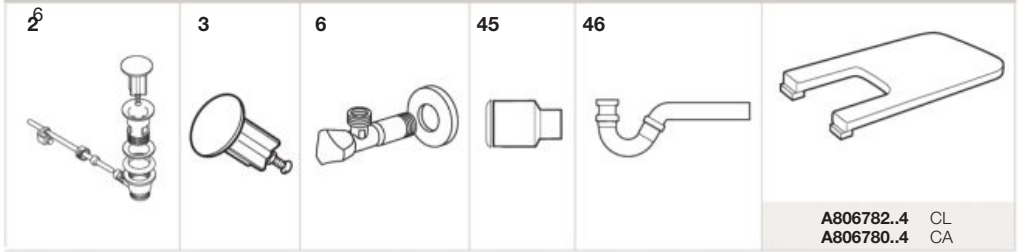

A806782..4 CL
A806780..4 CA

Bidé BTW Compact / BTW compact bidet

A357787000

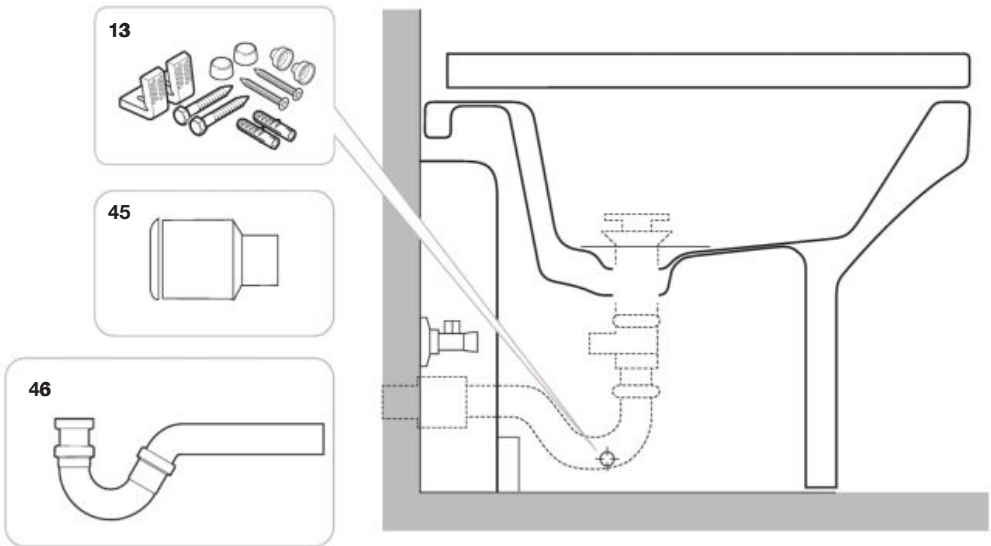

CL: Caída libre / standard closing
CA: Caída amortiguada / soft-closing

		€
2	**A525021200**	31,20
3	**AG0055800R**	14,40
6	**AG0078200R**	30,90
13	**AV0009400R**	6,16
45	**AV0013400R**	6,03
46	**A506402210**	33,60

Admite (no incluido) / Admits (not included)

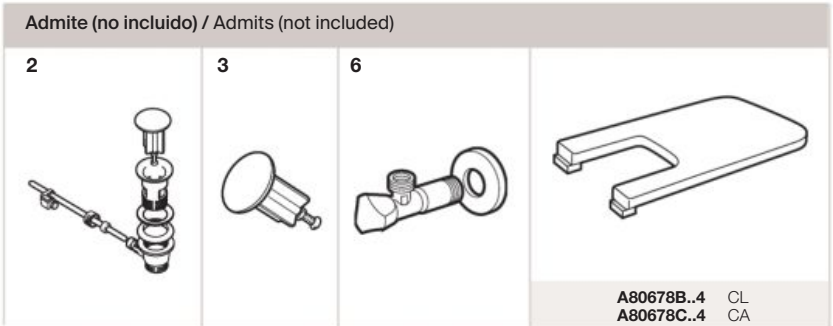

A80678B..4 CL
A80678C..4 CA

Dama-N

Bidé suspendido / Wall-hung bidet

A357785000

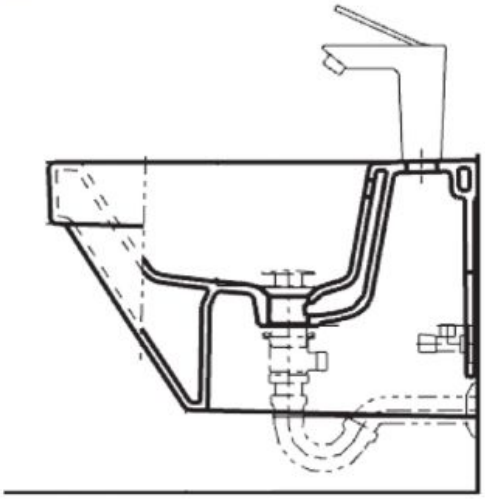

A357786000 Compact

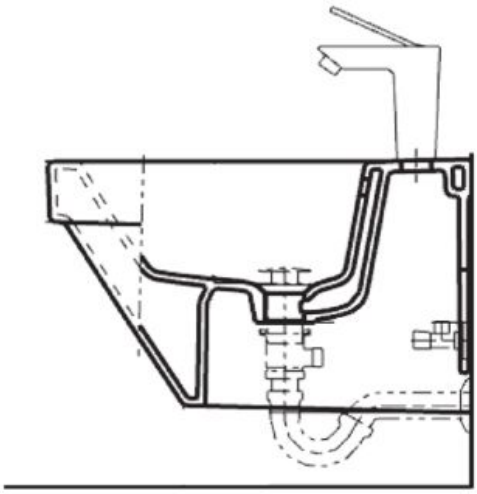

Admite (no incluido) / Admits (not included)

2



3



6

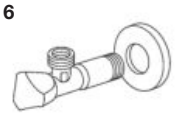

46



48

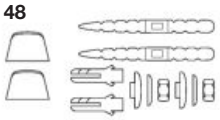

45

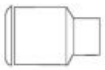

49

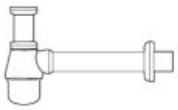

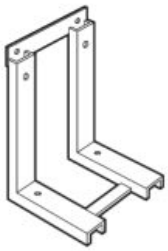

A822091001

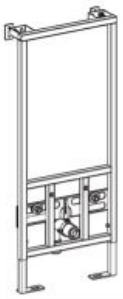

A890091000

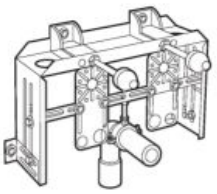

A890091100

CL: Caída libre / standard closing
CA: Caída amortiguada / soft-closing

		€
2	**A525021200**	31,20
3	**AG0055800R**	14,40
6	**AG0078200R**	30,90
45	**AV0013400R**	6,03

		€
46	**A506402210**	33,60
48	**AV0013500R**	14,40
49	**A506401814**	27,50

Ona

Mueble base de una puerta con lavabo / One door vanity unit with washbasin

UNIK ONA: MUEBLE BASE 1 PUERTA Base unit 1 door	
A851677...	400 mm

PACK ona: UNIK 1 PUERTA + ESPEJO Unik 1 door + mirror	
A851695...	400 mm

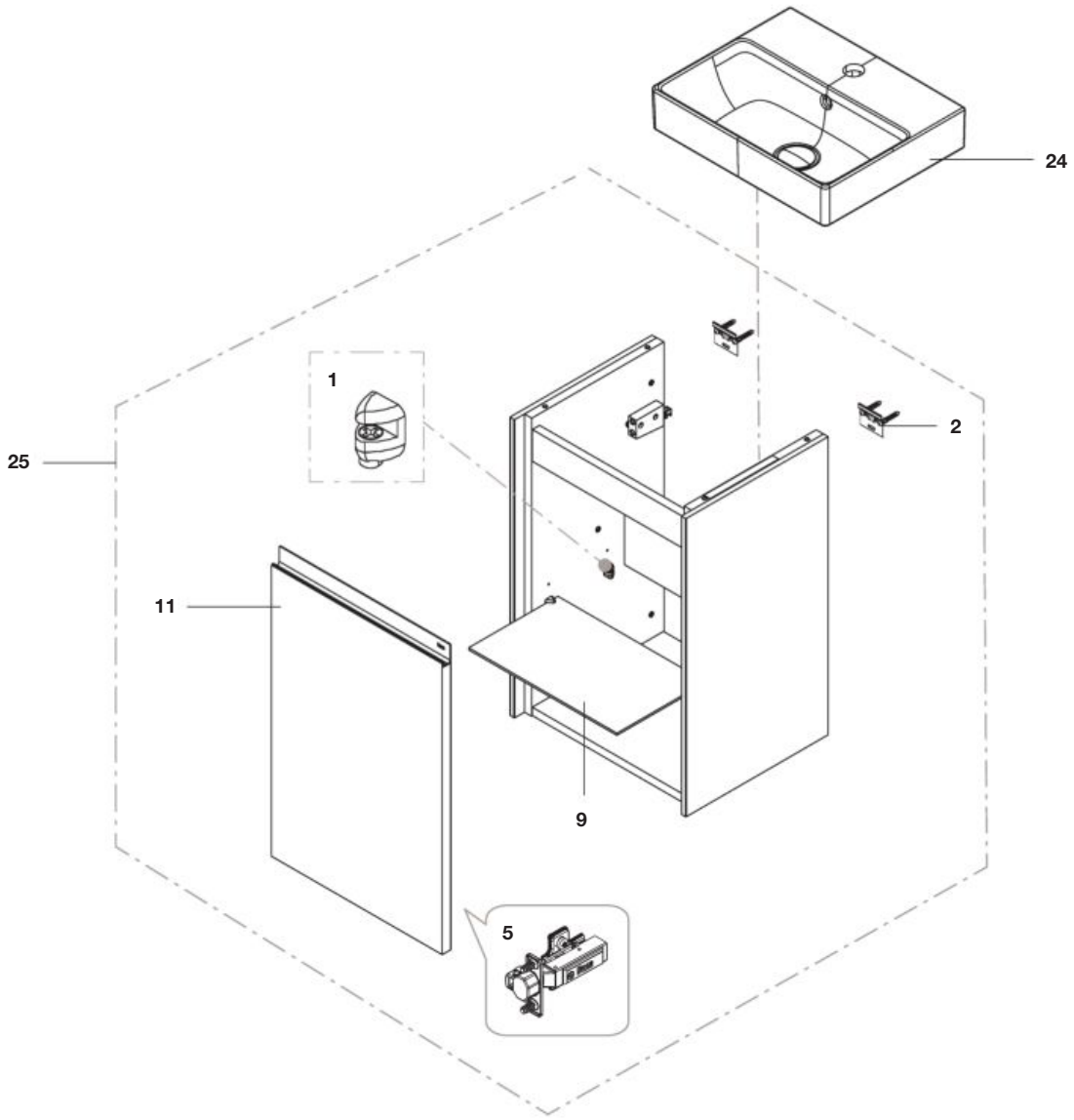

Las últimas posiciones de cada código indican el acabado (color):
The lasts positions indicates the finish (colour):

Producto Product	Recambio Spare Part	Acabado Finish
509	**MW**	**Blanco mate /** Matt White
510	**MG**	**Gris arena /** Sand Grey
511	**DE**	**Olmo oscuro /** Dark Elm
512	**LO**	**Roble claro /** Light Oak
513	**GR**	**Verde mate /** Matt Green

				€
1	4 un	**AU0084600R**		1,65
2	2 un	**AU0013300R**		15,80
5	2 un	**AU0089500R**		18,00
9		**AU0085400R**	400 mm	20,00

			€
11	**AU00883MWR**	400 mm	78,00
	AU00883MGR		78,70
	AU00883DER		74,50
	AU00883LOR		80,30
	AU00883GRR		73,30

Producto acabado compatible:
Finished product compatible:

			€
24	**A32768D004**	400 mm	-
25	**A857594...**	400 mm	-

Ona

Mueble base de una puerta con lavabo / One door vanity unit with washbasin

UNIK ONA: MUEBLE BASE 1 PUERTA Base unit 1 door	
A851678...	450 mm

PACK ONA: UNIK ONA 1 PUERTA + ESPEJO Unik 1 door + mirror	
A851696...	450 mm

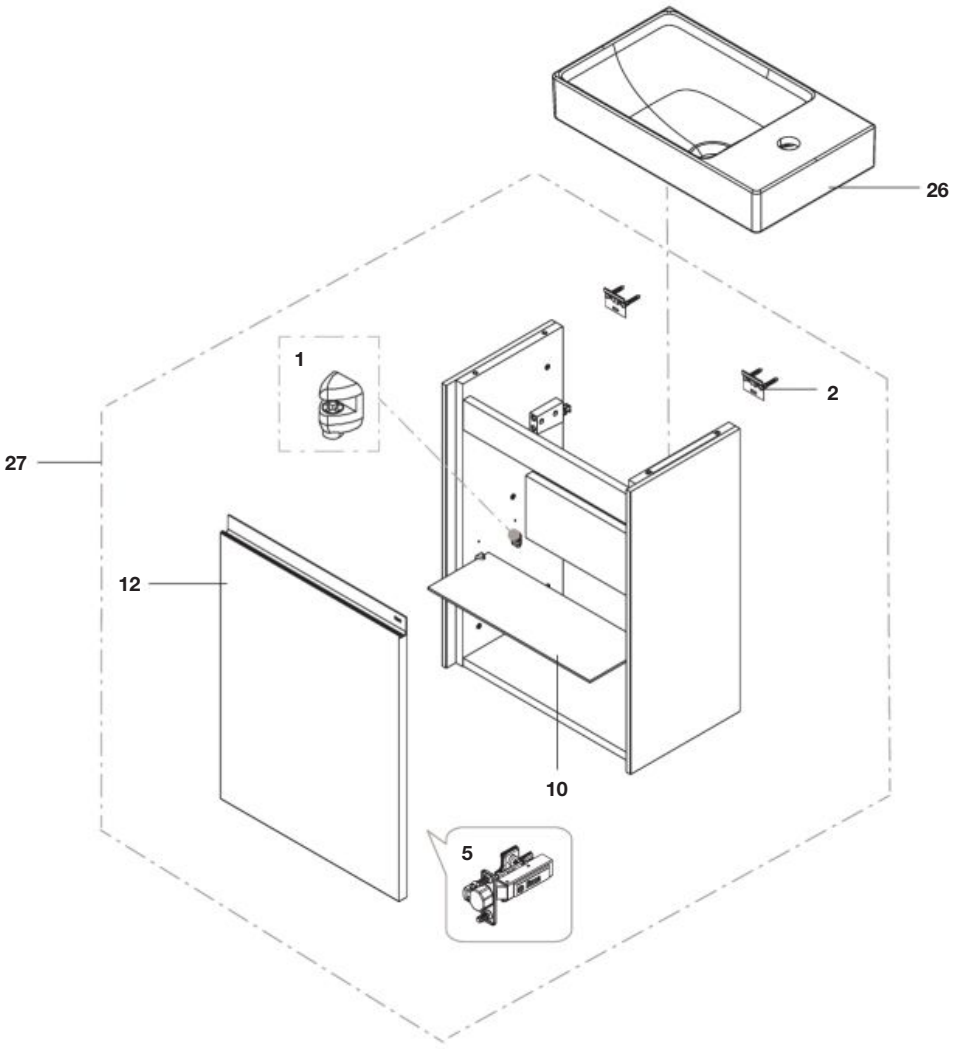

Las últimas posiciones de cada código indican el acabado (color):
The lasts positions indicates the finish (colour):

Producto Product	Recambio Spare Part	Acabado Finish
509	**MW**	Blanco mate / Matt White
510	**MG**	Gris arena / Sand Grey
511	**DE**	Olmo oscuro / Dark Elm
512	**LO**	Roble claro / Light Oak
513	**GR**	Verde mate / Matt Green

				€
1	4 un	**AU0084600R**		1,65
2	2 un	**AU0013300R**		15,80
5	2 un	**AU0089500R**		18,00
10		**AU0085500R**	450 mm	18,80

				€
12		**AU00884MWR**	450 mm	86,30
		AU00884MGR		85,80
		AU00884DER		81,80
		AU00884LOR		88,70
		AU00884GRR		78,00

Producto acabado compatible:
Finished product compatible:

			€
26	**A327681004**	450 mm	-
27	**A857595...**	450 mm	-

Ona

Mueble base compacto de dos cajones con lavabo / Two drawers compact vanity unit with washbasin

UNIK ONA: MUEBLE BASE 2 CAJONES CPT Base unit 2 drawers CPT	
A851681...	450 mm
A851682...	500 mm
A851683...	550 mm
A851684...	600 mm

PACK ONA: UNIK ONA 2 CAJONES CPT + ESPEJO Unik 2 drawers CPT + mirror	
A851697...	450 mm
A851698...	500 mm
A851699...	550 mm
A851700...	600 mm

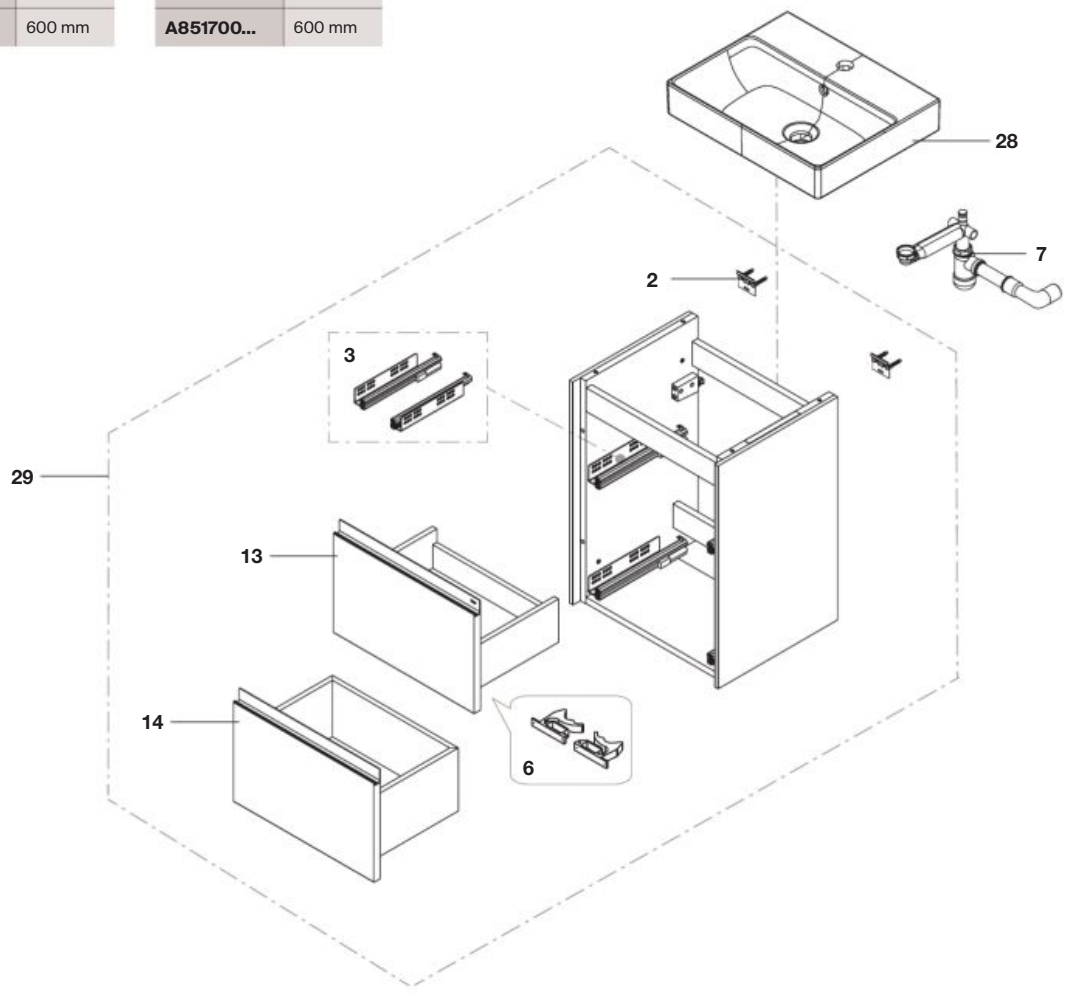

Las últimas posiciones de cada código indican el acabado (color):
The lasts positions indicates the finish (colour):

Producto Product	Recambio Spare Part	Acabado Finish
509	**MW**	Blanco mate / Matt White
510	**MG**	Gris arena / Sand Grey
511	**DE**	Olmo oscuro / Dark Elm
512	**LO**	Roble claro / Light Oak
513	**GR**	Verde mate / Matt Green

				€
2	2 un	**AU0013300R**		15,80
3		**AU0084900R**		61,70
6		**AU0017300R**		4,68
7		**AU0014100R**		44,90
13		**AU00856..R**	450 mm	132,00
		AU00859..R	500 mm	137,00
		AU00861..R	550 mm	145,00
		AU00863..R	600 mm	148,00
14		**AU00858..R**	450 mm	132,00
		AU00860..R	500 mm	137,00
		AU00862..R	550 mm	146,00
		AU00864..R	600 mm	150,00

Sólo se muestra el precio del acabado Blanco mate /
Only the price of the Matt White finish is shown

Producto acabado compatible:
Finished product compatible:

			€
28	**A327682004**	450 mm	-
	A32768E004	500 mm	-
	A327683004	550 mm	-
	A327684004	900 mm	-
29	**A857598...**	450 mm	-
	A857599...	500 mm	-
	A857600...	550 mm	-
	A857601...	600 mm	-

Ona

Mueble base de un cajón con lavabo / One drawer vanity unit with washbasin

UNIK ONA: MUEBLE BASE 1 CAJÓN Base unit 1 drawer	
A851685...	800 mm
A851686...	1000 mm

PACK ONA: UNIK ONA 1 CAJÓN + ESPEJO Unik 1 drawers + mirror	
A851701...	800 mm
A851702...	1000 mm

PACK ONA OCT: MUEBLE BASE 1 CAJÓN + ENCIMERA Base unit 1 drawer + countertop	
A851724...	800 mm
A851726...	1000 mm

PACK ONA: UNIK ONA 1 CAJÓN + ESPEJO + ENCIMERA Base unit 1 drawer + countertop + mirror	
A851712...	800 mm
A851714...	1000 mm

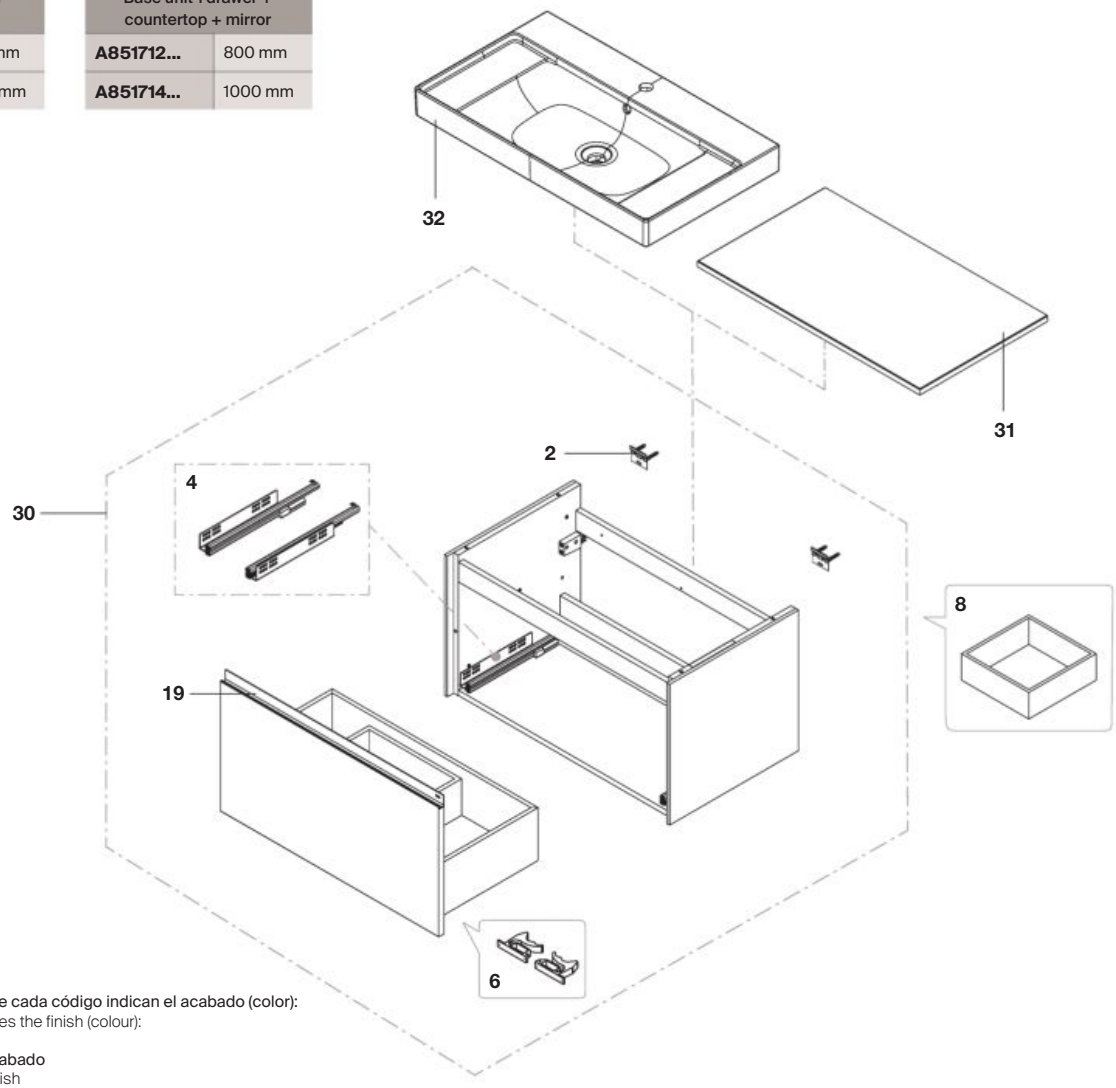

Las últimas posiciones de cada código indican el acabado (color):
The lasts positions indicates the finish (colour):

Producto Product	Recambio Spare Part	Acabado Finish
509	**MW**	Blanco mate / Matt White
510	**MG**	Gris arena / Sand Grey
511	**DE**	Olmo oscuro / Dark Elm
512	**LO**	Roble claro / Light Oak
513	**GR**	Verde mate / Matt Green

Acabados encimera (31):
Finishes countertop (31):

Producto Product	Recambio Spare Part	Acabado Finish
514	**PG**	Gris claro mate / Pebble Grey

			€
2	2 un	**AU0013300R**	15,80
4		**AU0089400R**	36,00
6		**AU0017300R**	4,68
8		**AU0088500R**	295,00

			€
19	**AU00881MWR**	800 mm	215,00
	AU00881MGR		217,00
	AU00881DER		210,00
	AU00881LOR		207,00
	AU00881GRR		220,00
	AU00882MWR	1000 mm	267,00
	AU00882MGR		268,00
	AU00882DER		258,00
	AU00882LOR		255,00
	AU00882GRR		275,00

Producto acabado compatible:
Finished product compatible:

			€
30	**A857607...**	800 mm	-
	A857610...	1000 mm	-
31	**A857618...**	800 mm	-
	A857634...	1000 mm	-
32	**A32768H004**	800 mm	-
	A32768A004	1000 mm	-

Ona

Mueble base de un cajón con lavabo derecho o encimera / One drawer vanity unit with right hand washbasin

UNIK ONA: MUEBLE BASE 1 CAJÓN DCH Base unit 1 drawer RH	
A851719...	800 mm

PACK ONA: UNIK ONA 1 CAJÓN DCH + ESPEJO Unik 1 drawers RH + mirror	
A851721...	800 mm

PACK ONA OCT: MUEBLE BASE 1 CAJÓN DCH + ENCIMERA Base unit 1 drawer RH + countertop	
A851724...	800 mm

PACK ONA OCT: MUEBLE BASE 1 CAJÓN DCH + ENCIMERA + ESPEJO Base unit 1 drawer RH + countertop + mirror	
A851712...	800 mm

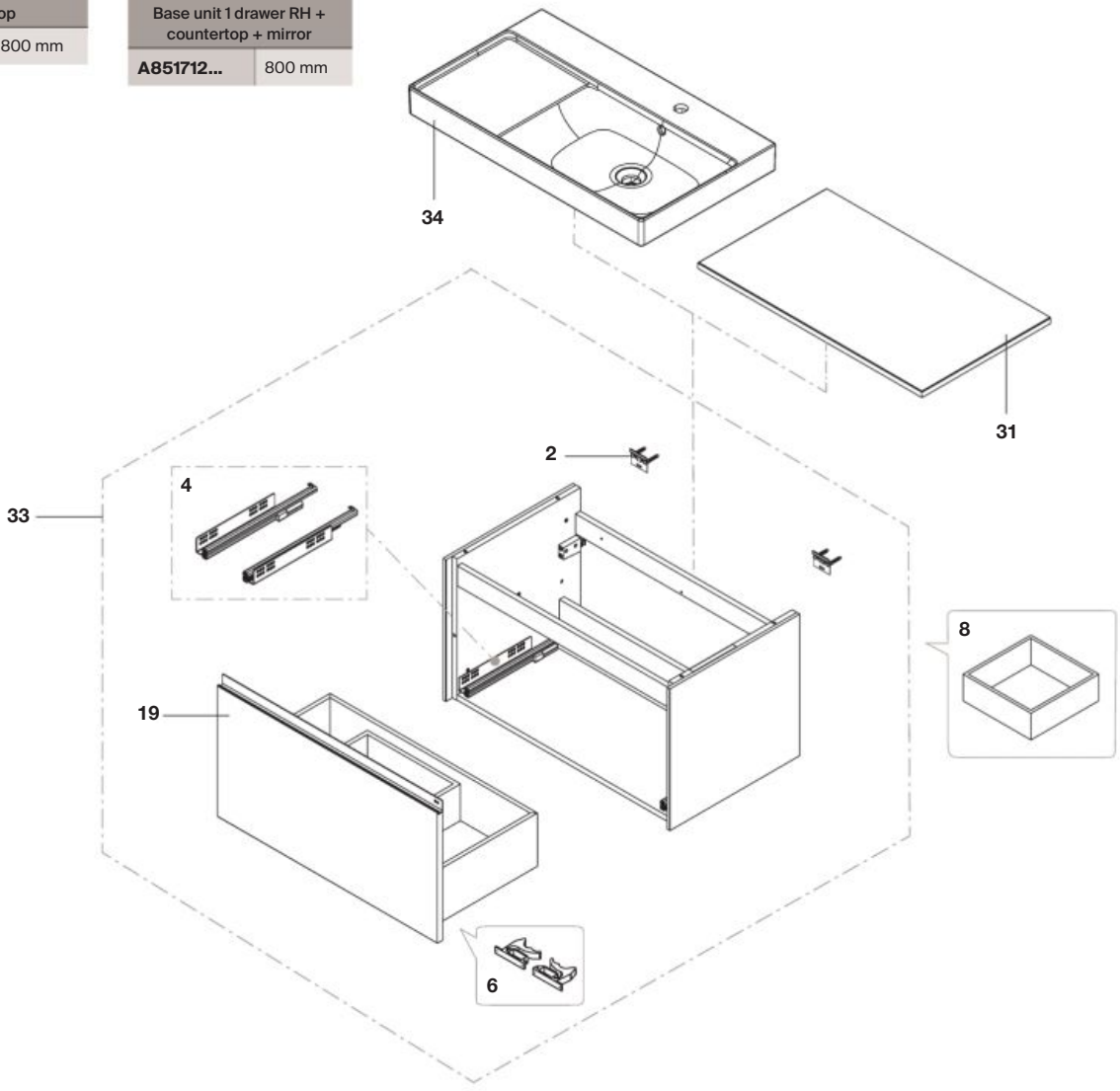

Las últimas posiciones de cada código indican el acabado (color):
The lasts positions indicates the finish (colour):

Producto Product	Recambio Spare Part	Acabado Finish
509	**MW**	Blanco mate / Matt White
510	**MG**	Gris arena / Sand Grey
511	**DE**	Olmo oscuro / Dark Elm
512	**LO**	Roble claro / Light Oak
513	**GR**	Verde mate / Matt Green

Acabados encimera (31):
Finishes countertop (31):

Producto Product	Recambio Spare Part	Acabado Finish
514	**PG**	Gris claro mate / Pebble Grey

			€
2	2 un	**AU0013300R**	15,80
4		**AU0089400R**	36,00
6		**AU0017300R**	4,68
8		**AU0088500R**	295,00

				€
19		**AU00881MWR**	800 mm	215,00
		AU00881MGR		217,00
		AU00881DER		210,00
		AU00881LOR		207,00
		AU00881GRR		220,00

Producto acabado compatible:
Finished product compatible:

			€
31	**A857618...**	800 mm	-
33	**A857607...**	800 mm	-
34	**A327688004**	800 mm	-

Ona

Mueble base de un cajón con lavabo izquierdo o encimera / One drawer vanity unit with left hand washbasin

UNIK ONA: MUEBLE BASE 1 CAJÓN IZD Base unit 1 drawer LH	
A851720...	800 mm

PACK ONA: UNIK ONA 1 CAJÓN IZD+ ESPEJO Unik 1 drawers LH + mirror	
A851722...	800 mm

PACK ONA OCT: MUEBLE BASE 1 CAJÓN IZD + ENCIMERA Base unit 1 drawer LH + countertop	
A851724...	800 mm

PACK ONA OCT: MUEBLE BASE 1 CAJÓN IZD + ENCIMERA + MIRROR Base unit 1 drawer LH + countertop + mirror	
A851712...	800 mm

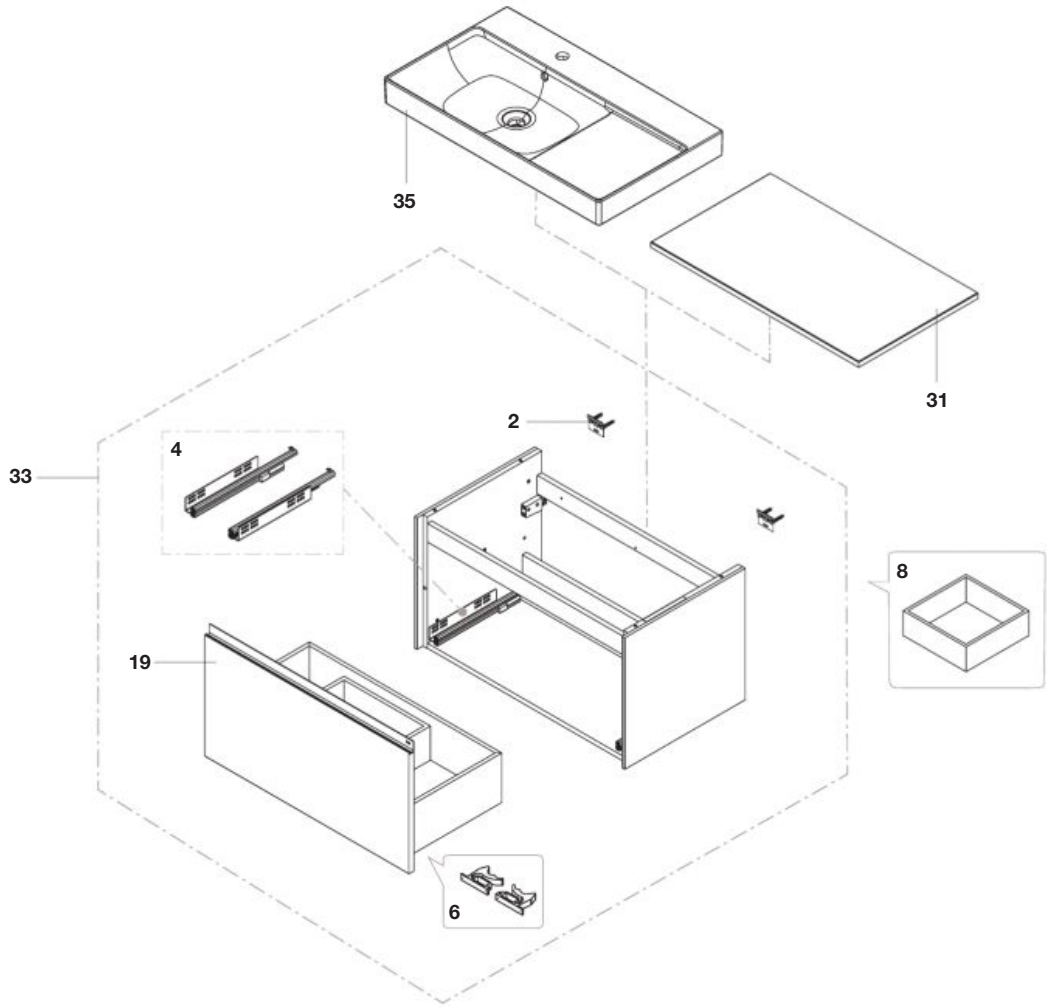

Las últimas posiciones de cada código indican el acabado (color):
The lasts positions indicates the finish (colour):

Producto Product	Recambio Spare Part	Acabado Finish
509	**MW**	Blanco mate / Matt White
510	**MG**	Gris arena / Sand Grey
511	**DE**	Olmo oscuro / Dark Elm
512	**LO**	Roble claro / Light Oak
513	**GR**	Verde mate / Matt Green

Acabados encimera (31):
Finishes countertop (31):

Producto Product	Recambio Spare Part	Acabado Finish
514	**PG**	Gris claro mate / Pebble Grey

			€
2	2 un	**AU0013300R**	15,80
4		**AU0089400R**	36,00
6		**AU0017300R**	4,68
8		**AU0088500R**	295,00

				€
19		**AU00881MWR**	800 mm	215,00
		AU00881MGR		217,00
		AU00881DER		210,00
		AU00881LOR		207,00
		AU00881GRR		220,00

Producto acabado compatible:
Finished product compatible:

			€
31	**A857618...**	800 mm	-
33	**A857607...**	800 mm	-
35	**A327689004**	800 mm	-

Ona

Mueble base de dos cajones con lavabo / Two drawers vanity unit with wasbasin

UNIK ONA: MUEBLE BASE 2 CAJONES Base unit 2 drawers	
A851687...	550 mm
A851688...	600 mm
A851689...	650 mm
A851691...	800 mm
A851693...	1000 mm

PACK ONA: UNIK 2 CAJONES + ESPEJO Unik 2 drawers + mirror	
A851703...	550 mm
A851704...	600 mm
A851705...	650 mm
A851707...	800 mm
A851709...	1000 mm

Pack ONA OCT: MUEBLE BASE 2 CAJONES + ENCIMERA Base unit 2 drawers + countertop	
A851728...	800 mm
A851730...	1000 mm

Pack ONA OCT: MUEBLE BASE 2 CAJONES + ENCIMERA + ESPEJO Base unit 2 drawers + countertop + mirror	
A851716...	800 mm
A851718...	1000 mm

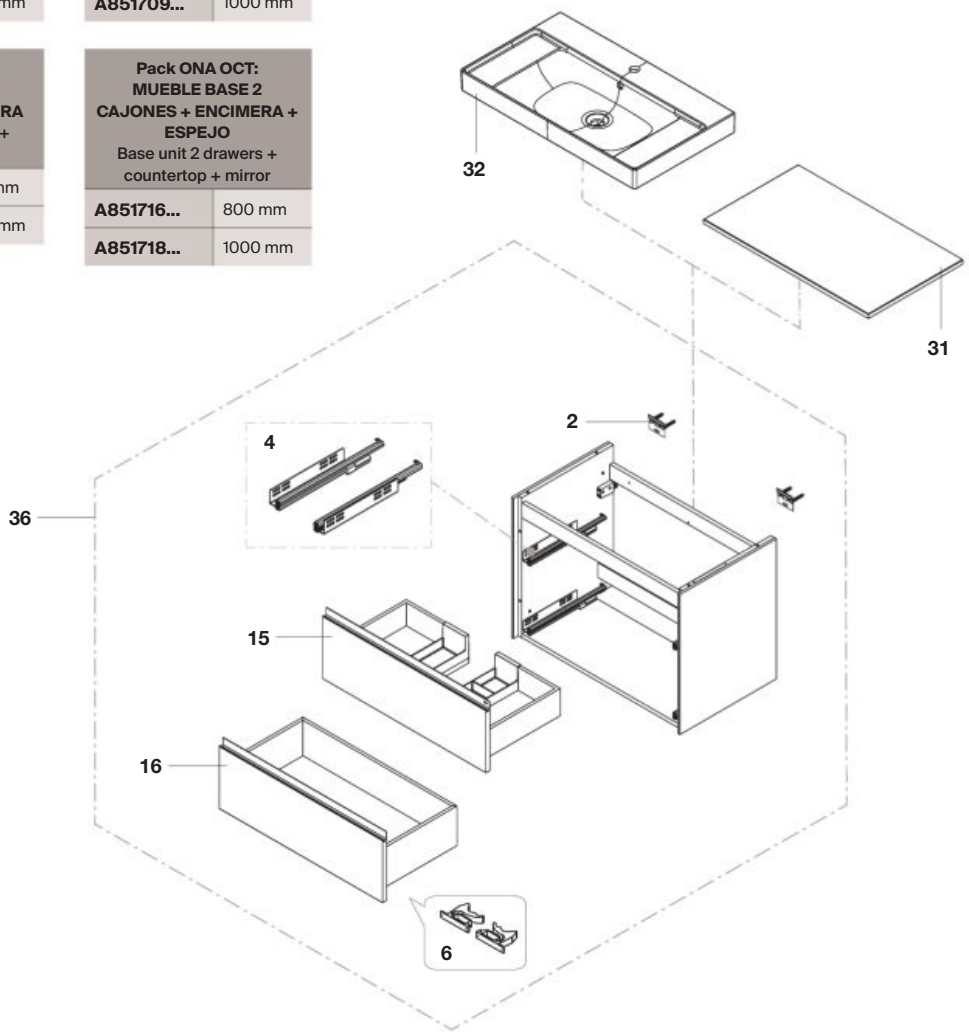

Las últimas posiciones de cada código indican el acabado (color):
The lasts positions indicates the finish (colour):

Producto Product	Recambio Spare Part	Acabado Finish
509	**MW**	Blanco mate / Matt White
510	**MG**	Gris arena / Sand Grey
511	**DE**	Olmo oscuro / Dark Elm
512	**LO**	Roble claro / Light Oak
513	**GR**	Verde mate / Matt Green

			€
2	2 un	**AU0013300R**	15,80
4	+	**AU0089400R**	36,00
6	+	**AU0017300R**	4,68
15	**AU00865..R**	550 mm	190,00
	AU00867..R	600 mm	195,00
	AU00869..R	650 mm	213,00
	AU00873..R	800 mm	223,00
	AU00875..R	1000 mm	258,00

Sólo se muestra el precio del acabado Blanco mate /
Only the price of the Matt White finish is shown

			€
16	**AU00866..R**	550 mm	152,00
	AU00868..R	600 mm	157,00
	AU00870..R	650 mm	175,00
	AU00872..R	800 mm	195,00
	AU00876..R	1000 mm	225,00

Producto acabado compatible:
Finished product compatible:

			€
31	**A857618...**	800 mm	-
	A857634...	1000 mm	-
32	**A327685004**	550 mm	-
	A327686004	600 mm	-
	A327687004	650 mm	-
	A32768H004	800 mm	-
	A32768A004	1000 mm	-
36	**A857612...**	550 mm	-
	A857613...	600 mm	-
	A857614...	650 mm	-
	A857630...	800 mm	-
	A857616...	1000 mm	-

Ona

Mueble base cuatro cajones con lavabo doble / Four drawers vanity unit with double wasbasin

UNIK ONA: MUEBLE BASE 4 CAJONES Base unit 4 drawers	
A851694...	1200 mm

PACK ONA: UNIK 4 CAJONES + ESPEJO Unik 4 drawers + mirror	
A851710...	1200 mm

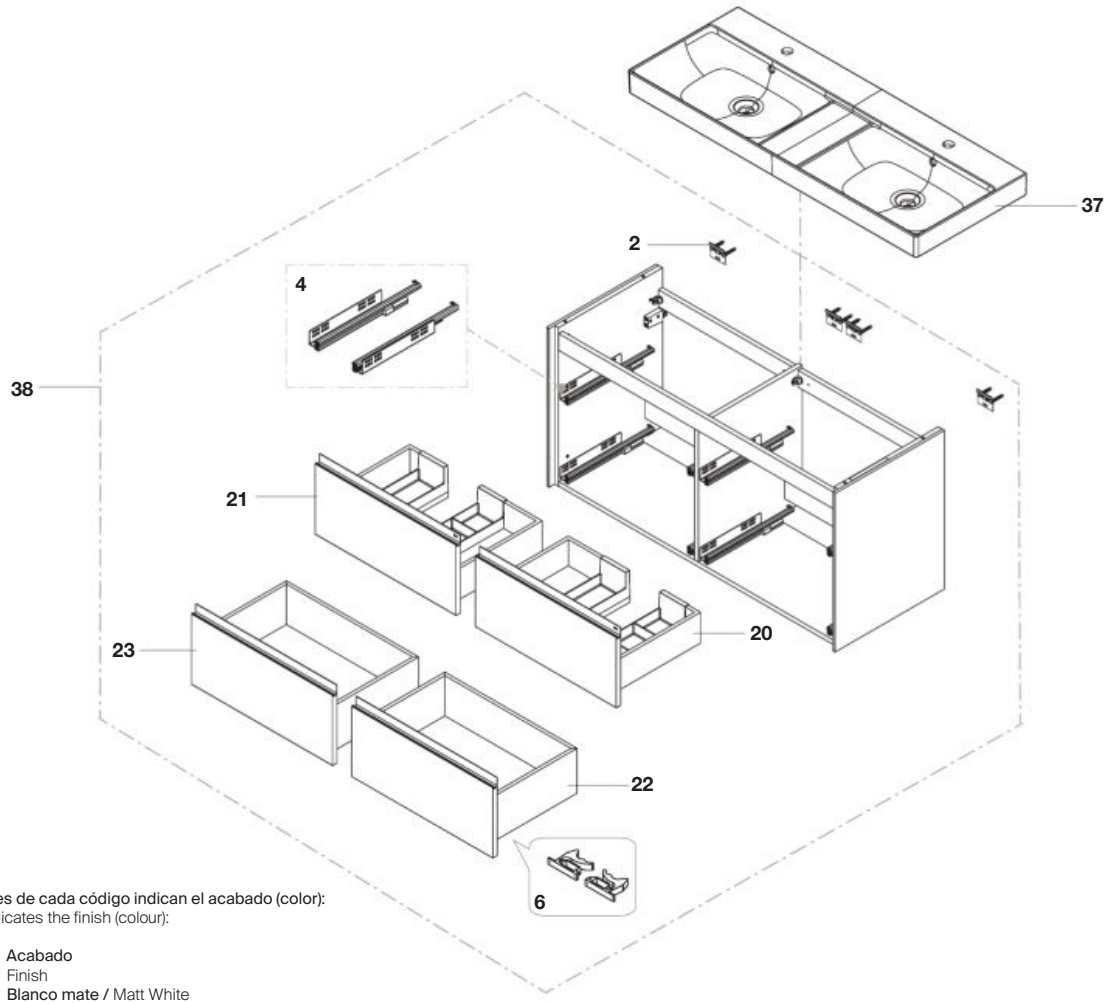

Las últimas posiciones de cada código indican el acabado (color):
The lasts positions indicates the finish (colour):

Producto Product	Recambio Spare Part	Acabado Finish
509	**MW**	Blanco mate / Matt White
510	**MG**	Gris arena / Sand Grey
511	**DE**	Olmo oscuro / Dark Elm
512	**LO**	Roble claro / Light Oak
513	**GR**	Verde mate / Matt Green

				€
2	2 un	**AU0013300R**		15,80
4	+	**AU0089400R**		36,00
6	+	**AU0017300R**		4,68
20		**AU00877MWR**	600 mm	193,00
		AU00877MGR		193,00
		AU00877DER		190,00
		AU00877LOR		190,00
		AU00877GRR		195,00
21		**AU00878MWR**	600 mm	195,00
		AU00878MGR		197,00
		AU00878DER		193,00
		AU00878LOR		192,00
		AU00878GRR		197,00

				€
22		**AU00879MWR**	600 mm	159,00
		AU00879MGR		160,00
		AU00879DER		156,00
		AU00879LOR		156,00
		AU00879GRR		161,00
23		**AU00880MWR**	600 mm	159,00
		AU00880MGR		160,00
		AU00880DER		156,00
		AU00880LOR		156,00
		AU00880GRR		160,00

Producto acabado compatible:
Finished product compatible:

			€
37	**A32768B004**	1200 mm	-
38	**A857617...**	1200 mm	-

Ona

Mueble base de dos cajones con lavabo derecho o encimera /
Two drawers vanity unit with right hand washbasin or countertop

UNIK ONA: MUEBLE BASE 2 CAJONES DCH Base unit 2 drawers RH	
A851690...	800 mm

PACK ONA: UNIK ONA 2 CAJONES DCH + ESPEJO Unik 2 drawers RH + mirror	
A851706...	800 mm

PACK ONA OCT: MUEBLE BASE 2 CAJÓNES DCH + ENCIMERA Base unit 2 drawers RH + countertop	
A851727...	800 mm

PACK ONA OCT: MUEBLE BASE 2 CAJÓNES DCH + ENCIMERA + ESPEJO Base unit 2 drawers RH + countertop + mirror	
A851715...	800 mm

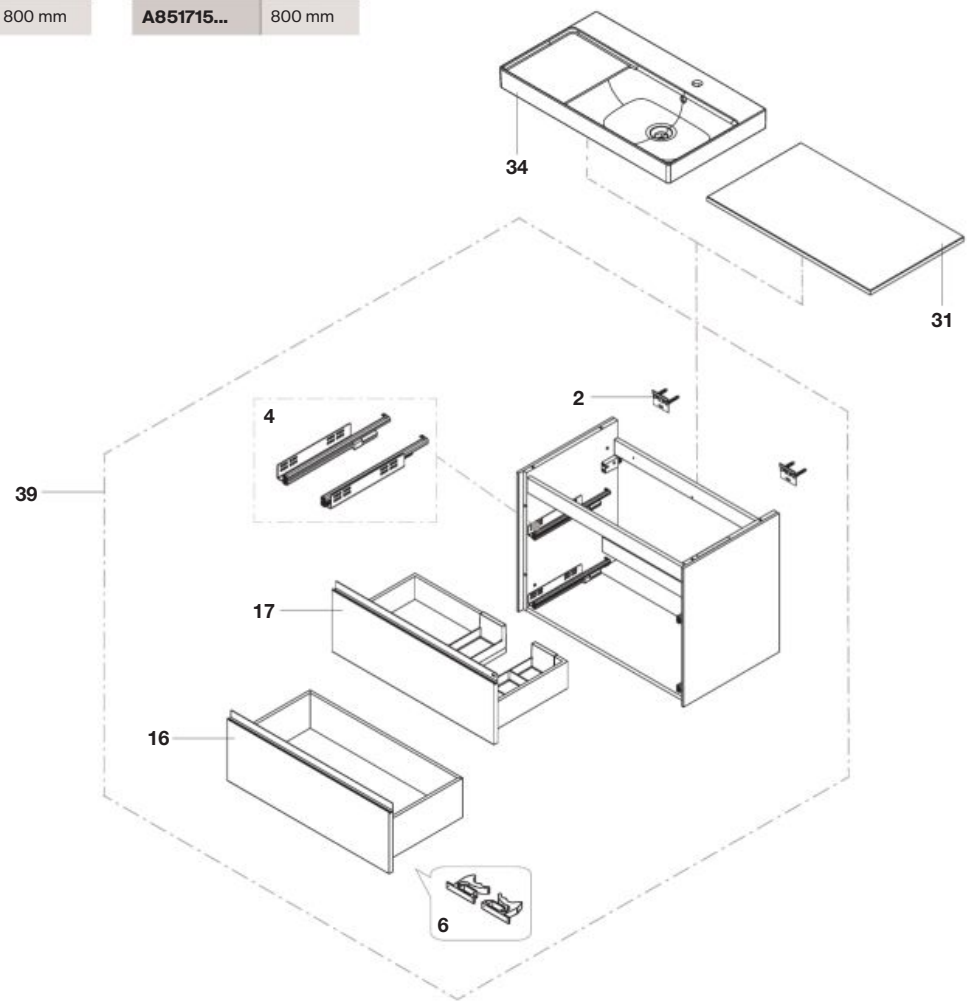

Las últimas posiciones de cada código indican el acabado (color):
The lasts positions indicates the finish (colour):

Producto Product	Recambio Spare Part	Acabado Finish
509	**MW**	Blanco mate / Matt White
510	**MG**	Gris arena / Sand Grey
511	**DE**	Olmo oscuro / Dark Elm
512	**LO**	Roble claro / Light Oak
513	**GR**	Verde mate / Matt Green

Acabados encimera (31):
Finishes countertop (31):

Producto Product	Recambio Spare Part	Acabado Finish
514	**PG**	Gris claro mate / Pebble Grey

				€
2	2 un	**AU0013300R**		15,80
4		**AU0089400R**		36,00
6		**AU0017300R**		4,68
16		**AU00872MWR**	800 mm	192,00
		AU00872MGR		195,00
		AU00872DER		188,00
		AU00872LOR		193,00
		AU00872GRR		187,00

				€
17		**AU00871MWR**	800 mm	222,00
		AU00871MGR		223,00
		AU00871DER		218,00
		AU00871LOR		222,00
		AU00871GRR		217,00

Producto acabado compatible:
Finished product compatible:

			€
31	**A857618...**	800 mm	-
34	**A327688004**	800 mm	-
39	**A857629...**	800 mm	-

Ona

Mueble base de dos cajones con lavabo izquierdo o encimera /
Two drawers vanity unit with left hand washbasin or countertop

UNIK ONA: MUEBLE BASE 2 CAJONES IZD Base unit 2 drawers left hand	
A851708...	800 mm

PACK ONA: UNIK ONA 2 CAJONES IZD + ESPEJO Unik 2 drawers LH + mirror	
A851708...	800 mm

PACK ONA OCT: MUEBLE BASE 2 CAJÓNES IZD + ENCIMERA Base unit 2 drawers LH + countertop	
A851729...	800 mm

PACK ONA OCT: MUEBLE BASE 2 CAJÓNES IZD + ENCIMERA + MIRROR Base unit 2 drawers LH + countertop + mirror	
A851717...	800 mm

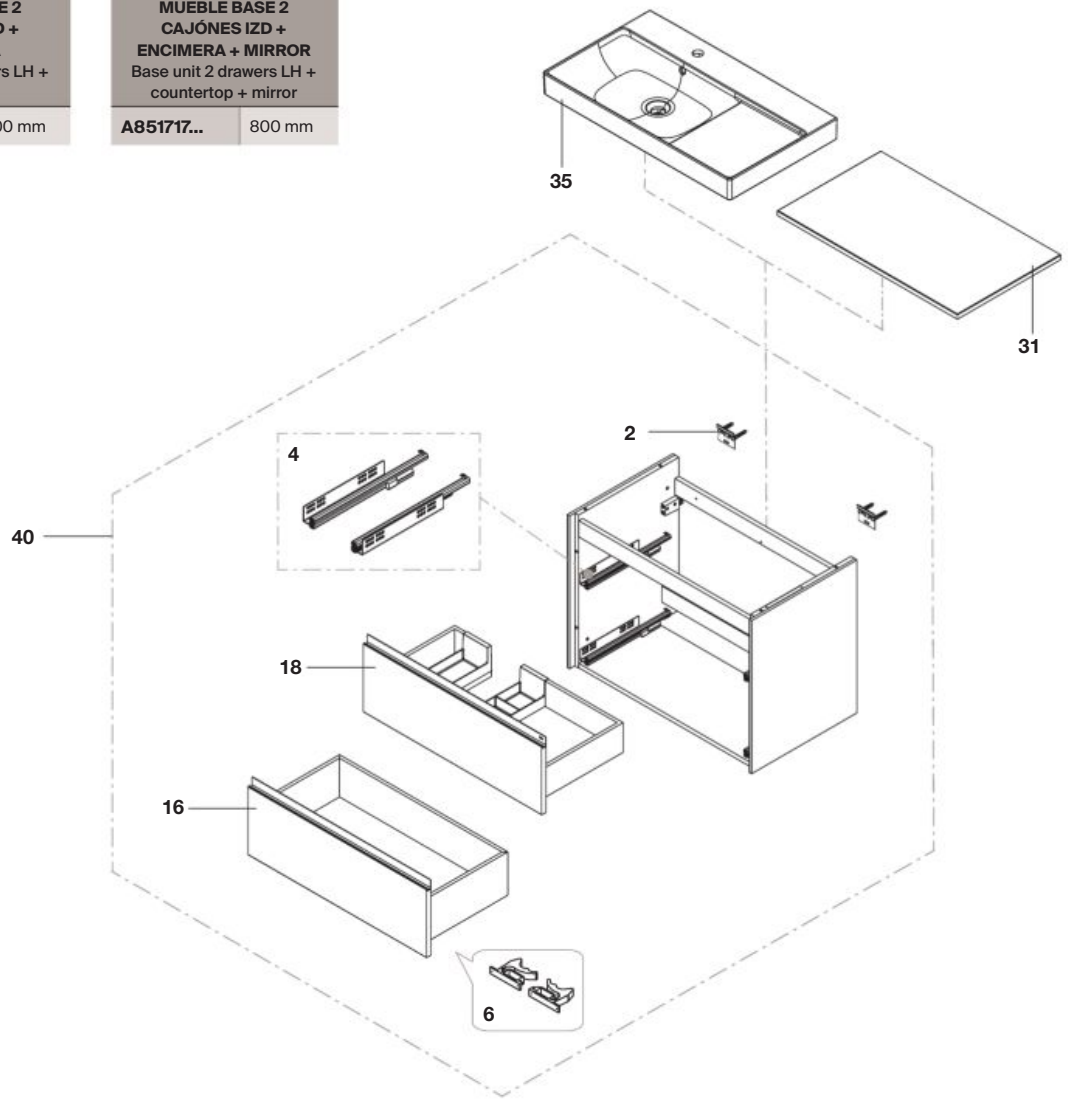

Las últimas posiciones de cada código indican el acabado (color):
The lasts positions indicates the finish (colour):

Producto Product	Recambio Spare Part	Acabado Finish
509	**MW**	Blanco mate / Matt White
510	**MG**	Gris arena / Sand Grey
511	**DE**	Olmo oscuro / Dark Elm
512	**LO**	Roble claro / Light Oak
513	**GR**	Verde mate / Matt Green

Acabados encimera (31):
Finishes countertop (31):

Producto Product	Recambio Spare Part	Acabado Finish
514	**PG**	Gris claro mate / Pebble Grey

				€
2	2 un	**AU0013300R**		15,80
4	+	**AU0089400R**		36,00
6	+	**AU0017300R**		4,68
16		**AU00872MWR**	800 mm	192,00
		AU00872MGR		195,00
		AU00872DER		188,00
		AU00872LOR		193,00
		AU00872GRR		187,00

			€
18	**AU00874MWR**	800 mm	222,00
	AU00874MGR		222,00
	AU00874DER		218,00
	AU00874LOR		217,00
	AU00874GRR		223,00

Producto acabado compatible:
Finished product compatible:

			€
31	**A857618...**	800 mm	-
35	**A327689004**	800 mm	-
40	**A857631...**	800 mm	-

Ona

Taza tanque bajo Rimless
Close-coupled WC pan Rimless

A342687..0

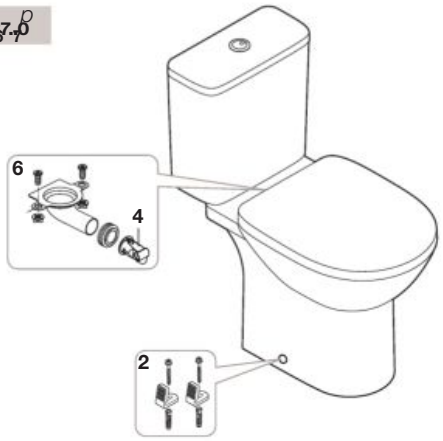

Admite (no incluido) / Admits (not included)

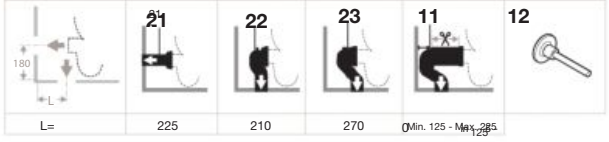

L=	225	210	270	Min. 125 - Max. 285	

Taza tanque bajo adosado a pared Rimless
Close-coupled back-to-wall WC pan Rimless

A342688..0	
A342688..R	AUS

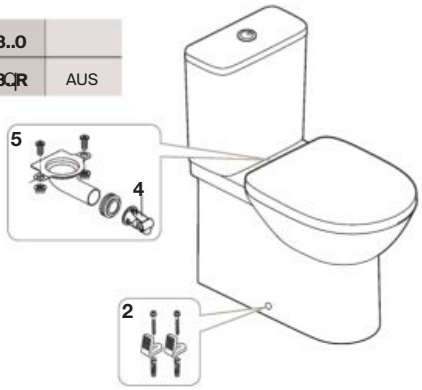

Admite (no incluido) / Admits (not included)

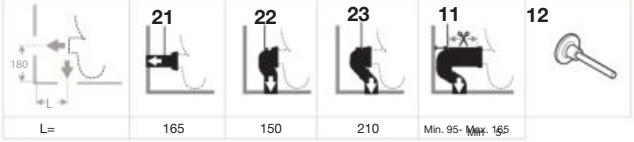

L=	165	150	210	Min. 95- Max. 165	

Taza tanque alto o empotrable Rimless
High or build-in cistern WC pan Rimless

A347687..0	
A346687..R	AUS



Admite (no incluido) / Admits (not included)

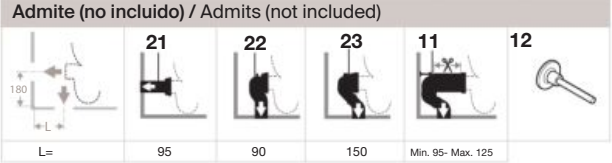

L=	95	90	150	Min. 95- Max. 125	

Taza suspendida Rimless /
Wall-hung WC pan Rimless

A346687..0	530 mm
A346688..0	480 mm
A346687..R	AUS 530 mm
A346688..R	AUS 480 mm

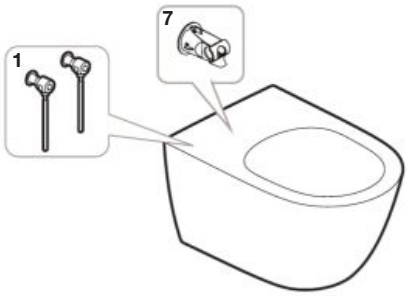

Admite / Admits



		€
1	**AV0058400R**	42,40
2	**AV0026800R**	9,95
4	**AV0059800R**	7,59
5	**AV0059900R**	15,90
6	**AV0060000R**	15,50
7	**AV0060400R**	7,59

		€
11	**AV0007600R**	46,10
12	**AV0035400R**	4,80
20	**AV0007800R**	8,11
21	**AV0009300R**	42,70
22	**AV0007900R**	14,60
23	**AV0007700R**	14,60

Ona

Tanque con doble descarga 4,5/3L
Cistern with dual flush 4,5/3 L

A341680..0	Lateral / Side
A341681..0	Inferior / Bottom
A34168C..F	UK Inferior / Bottom
A34168T..R	AUS Posterior / Rear
A34168W..R	AUS Inferior / Bottom

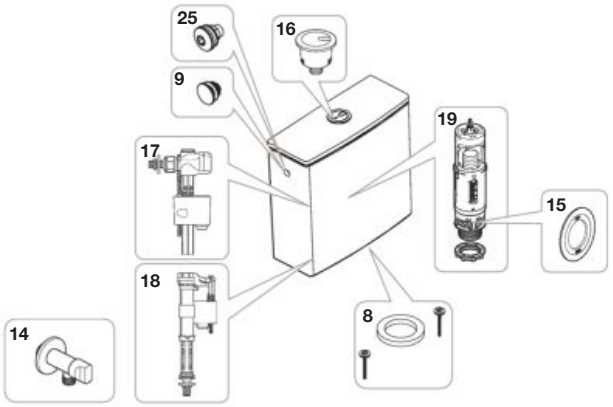

Bidé adosado a pared / Bidet back-to-wall

A357683..0	
A357687..R	AUS

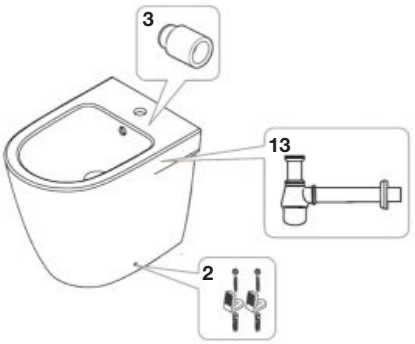

Bidé suspendido / Wall-hung Bidet

A357685..0	
A357685..R	AUS

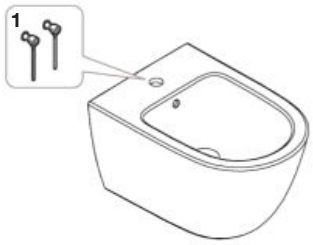

ADMITE / Admits

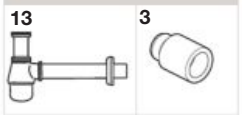

Lavabo suspendido / Wall-hung washbasin

A327681..0	450x260 mm
A327682..0	450x360 mm
A32768E..0	500x360 mm
A327683..0	550x360 mm
A327684..0	600x380 mm
A327685..0	550x460 mm
A327687..0	600x460 mm
A327686..0	650x460 mm
A32768X..0	900x460 mm
A327688..0	800x460 RH mm
A327689..0	800x460 LH mm
A32768A..0	1000x460 mm
A32768B..0	1200x460



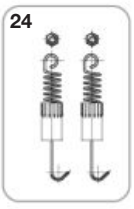

			€
1	**AV0058400R**		42,40
2	**AV0026800R**		9,95
3	**AV0013400R**		6,03
8	**AV0036000R**		10,20
9	**AV0012600R**		2,54
10	**AV0007500R**		5,51
13	**A5064015**		27,50
14	**AC0152200R**	AUS 1/2" - 1/2"	28,60
15	**AH0011400R**		6,42
16	**AH0011300R**		14,50
24	**AV0015900R**		8,02
25	**AV0037100R**	UK / AUS	2,80

Producto acabado compatible:
Finished product compatible:

			€
17	**A822504300**	Lateral / Side	-
	AH0019800R	AUS Lateral / Side	-
18	**A822504400**	Inferior / Bottom	-
	AH0019900R	AUS Inferior / Bottom	-
	A822505750	UK	-
19	**A822505500**		-
	AH0019700R	AUS	-
	A822505740	UK	-

Delta

Columna de dos puertas / Two doors column

COLUMNA 2 PUERTAS Column 2 doors	
A857635...	400 mm

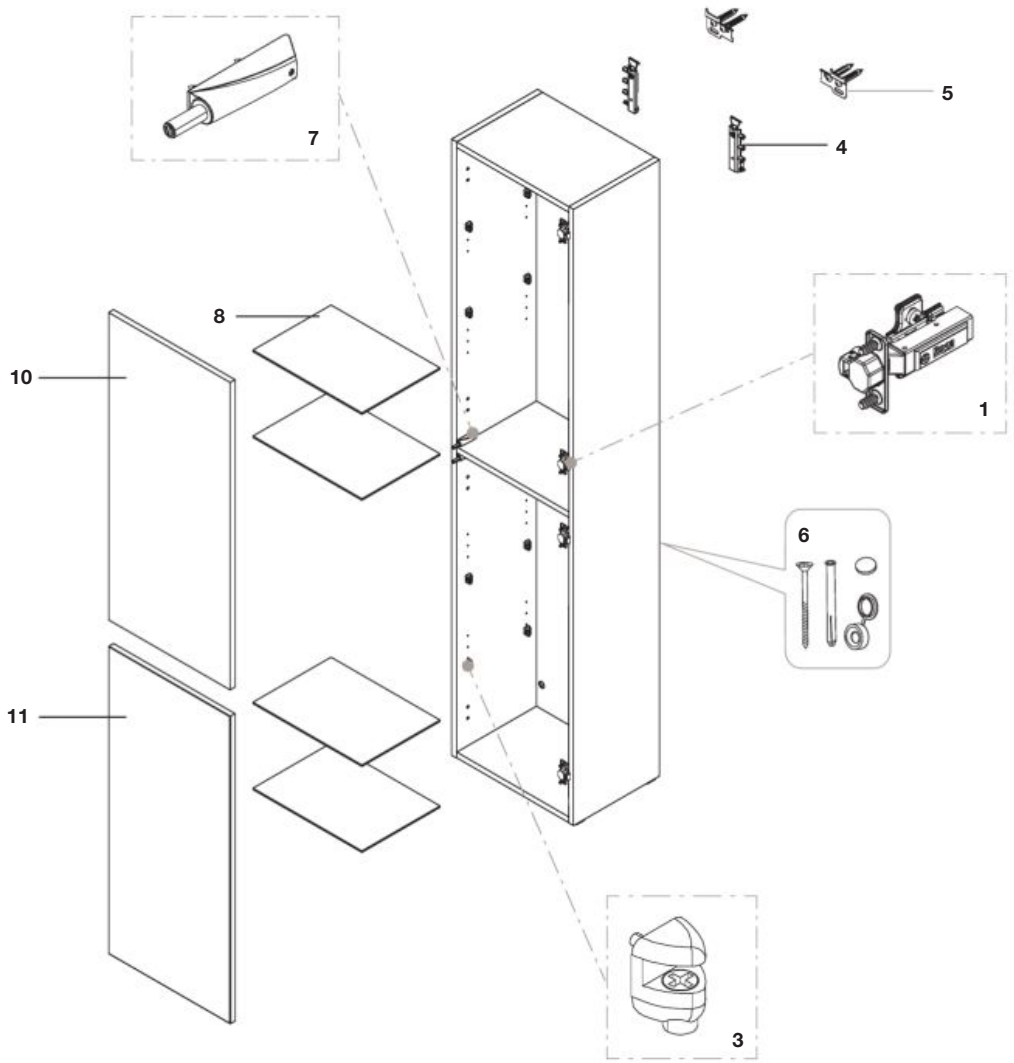

Las últimas posiciones de cada código indican el acabado (color):
The lasts positions indicates the finish (colour):

Producto Product	Recambio Spare Part	Acabado Finish
506	**MW**	**Blanco mate /** Matt White
510	**MG**	**Gris mate /** Matt Grey
511	**DE**	**Olmo oscuro /** Dark Elm
512	**LO**	**Roble claro /** Light Oak
513	**GR**	**Verde mate /** Matt Green

				€
1	2 un	**AU0089300R**		19,70
3	4 un	**AU0084600R**		1,65
4		**AU0091900R**		15,00
5		**AU0092200R**		10,70
6		**AU0004200R**		10,50
7	2 un	**AU0085000R**		39,30
8		**AU0088600R**	400 mm	24,70

			€
10	**AU00890MWR**	873 mm	126,00
	AU00890MGR		127,00
	AU00890DER		118,00
	AU00890LOR		114,00
	AU00890GRR		132,00
11	**AU00963MWR**	873 mm	126,00
	AU00963MGR		127,00
	AU00963DER		118,00
	AU00963LOR		114,00
	AU00963GRR		132,00

Delta

Columna de dos puertas con repisa abierta / Two doors column with open shelf

COLUMNA ABIERTA 2 PUERTAS Open column 2 doors	
A857636...	400 mm

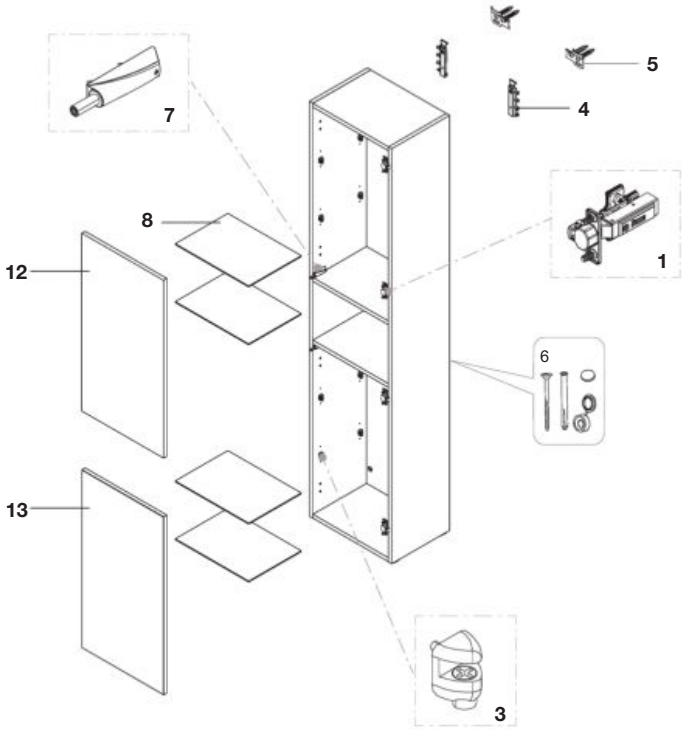

Columna alta de una puerta / One door top column

COLUMNA ALTA 1 PUERTA Top column 1 door	
A857637...	350 mm

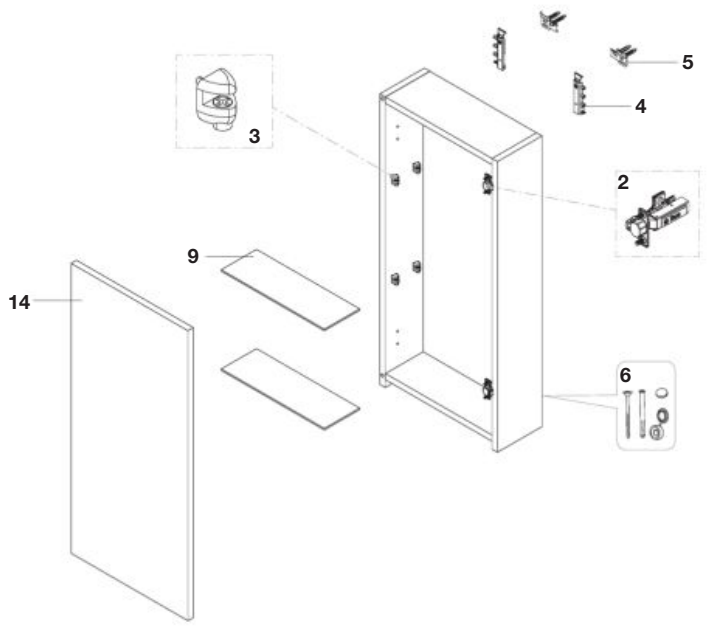

Las últimas posiciones de cada código indican el acabado (color):
The lasts positions indicates the finish (colour):

Producto Product	Recambio Spare Part	Acabado Finish
506	**MW**	**Blanco mate /** Matt White
510	**MG**	**Gris mate /** Matt Grey
511	**DE**	**Olmo oscuro /** Dark Elm
512	**LO**	**Roble claro /** Light Oak
513	**GR**	**Verde mate /** Matt Green
558	**OW**	**Blanco roto /** Off-White
559	**NG**	**Gris noble claro /** Light Noble Grey
560	**LT**	**Terracota claro /** Light Terracota
565	**LE**	**Olmo claro /** Light Elm

Sólo se muestra el precio del acabado Blanco mate /
Only the price of the Matt White finish is shown

			€
1	2 un	**AU0089300R**	19,70
2	2 un	**AU0089500R**	18,00
3	4 un	**AU0084600R**	1,65
4	+	**AU0091900R**	15,00

				€
5	+	**AU0092200R**		10,70
6		**AU0004200R**		10,50
7	2 un	**AU0085000R**		39,30
8		**AU0088600R**	400 mm	24,70

			€
9	**AU0088700R**	350 mm	15,20
12	**AU00888..R**	750 mm	96,80
13	**AU00964..R**	750 mm	96,80
14	**AU00892..R**	750 mm	87,00

The Gap

Mueble base dos cajones / Base unit two drawers

UNIK THE GAP STD: MUEBLE BASE 2 CAJONES CON LAVABO **Base unit 2 drawers with washbasin**	
A851622...	550 mm
A851476...	600 mm
A851477...	700 mm
A851478...	800 mm
A851852...	1000 mm
A851483...	1200 mm

UNIK THE GAP OCT: MUEBLE BASE 2 CAJONES CON ENCIMERA **Base unit 2 drawers with countertop**	
A851500...	600 mm
A851501...	800 mm
A851960...	1000 mm
A851961...	1400 mm
A851962...	1600 mm

UNIK THE GAP mural: MUEBLE BASE 2 CAJONES + LAVABO **Base unit 2 drawers + WB**	
A851963...	600 mm
A851964...	800 mm
A851965...	1000 mm

PACK THE GAP STD: UNIK THE GAP 2 CAJONES + ESPEJO **Unik The Gap 2 drawers + mirror**	
A851624...	550 mm
A851509...	600 mm
A851510...	700 mm
A851511...	800 mm
A851854...	1000 mm
A851516...	1200 mm

PACK THE GAP OCT: MUEBLE BASE 2 CAJONES + ESPEJO + EMCIMERA **Base unit 2 drawers + mirror + countertop**	
A851531...	600 mm
A851532...	800 mm
A851537...	1200 mm

PACK THE GAP mural: UNIK THE GAP 2 CAJONES + ESPEJO **Unik The Gap 2 drawers + mirror**	
A851974...	600 mm
A851975...	800 mm
A851976...	1000 mm

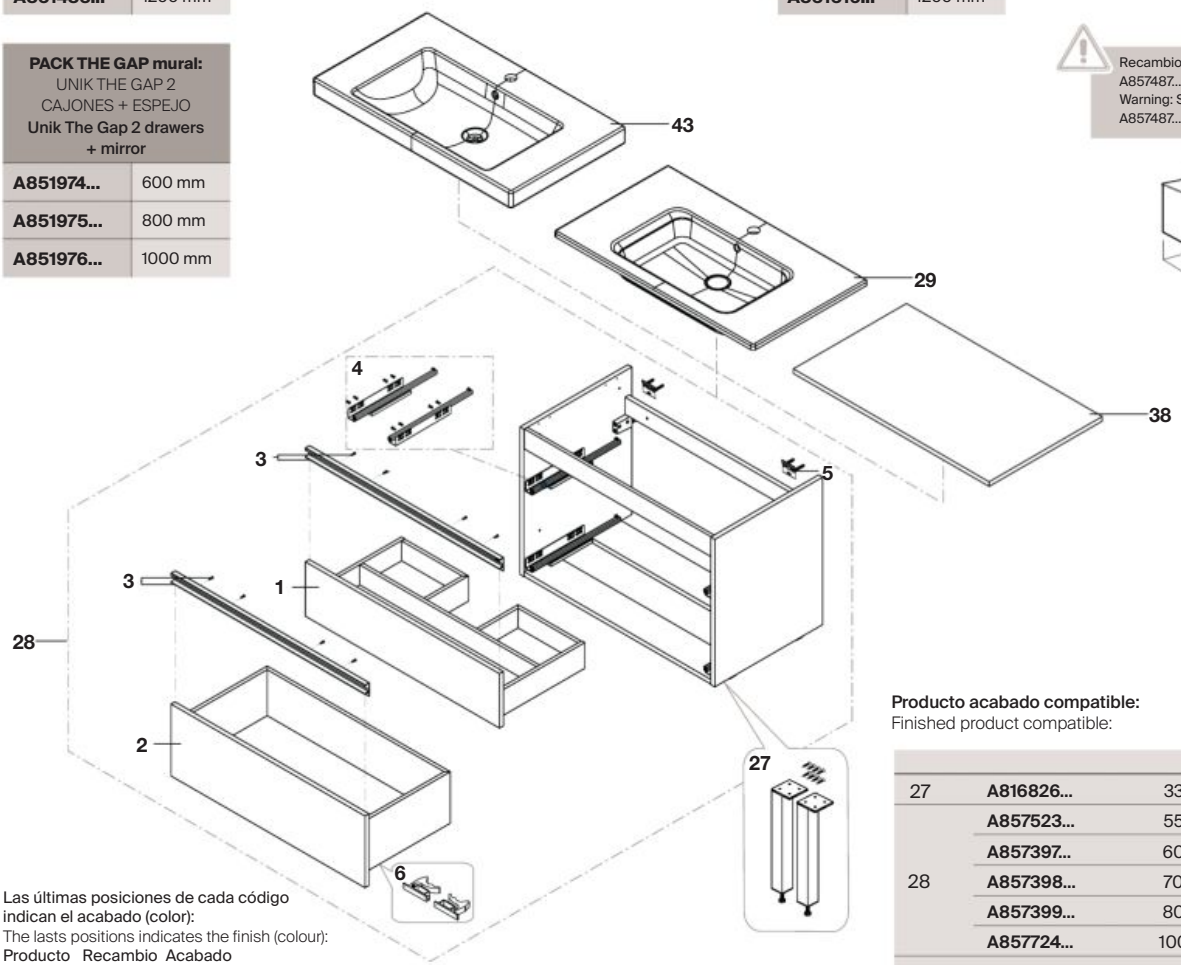

Recambios del módulo auxiliar A857487... se encuentra en pág. 215
Warning: Spare parts of auxiliar unit A857487... located in pag. 215



Las últimas posiciones de cada código indican el acabado (color):
The lasts positions indicates the finish (colour):

Producto Product	Recambio Spare Part	Acabado Finish
806	**WH**	**Blanco brillo /** Glossy White
434	**AS**	**Fresno Nordico /** Nordic ash
402	**OA**	**Roble City /** City Oak
153	**GA**	**Gris antracita /** Grey Anthracite
447	**GM**	**Gris Ártico /** Arctic grey
509	**MW**	**Blanco mate /** Matt White
548	**AM**	**Azul mate /** Matt Blue
517	**WL**	**Nogal /** Walnut
547	**GX**	**Gris mate /** Matt grey

Acabados kit tirador (3):
Finishes Kit handle (3):

Recambio Spare part	Acabado Finished
NI	**Níquel /** Nickel
WH	**Aluminio /** Aluminium
MB	**Negro mate /** Black Matt

Acabados set patas:
Finishes feet set

Recambio Spare part	Acabado Finished
339	**Aluminio /** Aluminium
458	**Níquel /** Nickel
485	**Negro mate /** Black matt

				€
1		**AU00896..R**	550 mm	166,00
		AU00701..R	600 mm	99,70
		AU00703..R	700 mm	101,00
		AU00705..R	800 mm	168,00
		AU01001..R	1000 mm	225,00
2		**AU00897..R**	550 mm	135,00
		AU00702..R	600 mm	91,30
		AU00704..R	700 mm	98,30
		AU00706..R	800 mm	106,00
		AU00709..R	1000 mm	149,00

				€
3	2 un	**AU00899..R**	550 mm	108,00
	2 un	**AU00727..R**	600 mm	76,20
	2 un	**AU00728..R**	700 mm	81,50
	2 un	**AU00729..R**	800 mm	88,80
	2 un	**AU00730..R**	1000 mm	100,00
4	+	**AU0038500R**		20,50
5	2 un	**AU0013300R**		15,80
6	+	**AU0017300R**		4,68

Sólo se muestra el precio del acabado Blanco /
Only the price of the White finish is shown

Producto acabado compatible:
Finished product compatible:

			€
27	**A816826...**	335 mm	-
28	**A857523...**	550 mm	-
	A857397...	600 mm	-
	A857398...	700 mm	-
	A857399...	800 mm	-
	A857724...	1000 mm	-
29	**A3279AJ000**	550 mm	-
	A3279A8000	600 mm	-
	A3279A7000	700 mm	-
	A3279A4000	800 mm	-
	A3279A1000	1000 mm	-
38	**A857418...**	600 mm	-
	A857419...	800 mm	-
	A857833...	900 mm	-
	A857834...	1000 mm	-
	A857835...	1100 mm	-
	A857424...	1200 mm	-
	A857836...	1400 mm	-
	A857837...	1600 mm	-
43	**A3270M1004**	600 mm	-
	A3270M0004	800 mm	-
	A3270MA004	1000 mm	-
	A3270MU000	1400 mm	-

The Gap

Mueble base dos cajones derecho / Base unit two drawers right

UNIK THE GAP STD: MUEBLE BASE 2 CAJONES DERECHO + LAVABO **Base unit 2 drawers + RH washbasin**	
A851480...	800 mm
A851482...	1000 mm

UNIK THE GAP OCT: MUEBLE BASE 2 CAJONES + UNIDAD AUXILIAR CON ESTANTE DERECHO + LAVABO DERECHO **Base unit 2 drawers, auxiliar unit with countertop + washbasin RH**	
A851502...	900 mm
A851504...	1100 mm

UNIK THE GAP mural: MUEBLE BASE 2 CAJONES DERECHO + LAVABO MURAL **Base unit 2 drawers + wall-hung basin RH**	
A851978...	1000 mm

PACK THE GAP OCT: MUEBLE BASE 2 CAJONES DERECHO + LAVABO **Base unit 2 drawers + washbasin RH**	
A851958...	1000 mm

PACK THE GAP STD: UNIK THE GAP 2 CAJONES DERECHO + ESPEJO **Unik The Gap 2 drawers RH + mirror**	
A851513...	800 mm
A851515...	1000 mm

PACK THE GAP OCT: UNIK THE GAP OCT + LAVABO DERECHO + ESPEJO + ENCIMERA **Unik The Gap OCT + washbasin + mirror + countertop**	
A851533...	900 mm
A851535...	1100 mm

PACK THE GAP mural: UNIK THE GAP 2 CAJONES DERECHO + ESPEJO **Unik The Gap 2 drawers RH + mirror**	
A851972...	1000 mm

PACK THE GAP mural: UNIK THE GAP 2 CAJONES DERECHO + ESPEJO **Base unit 2 drawers RH + mirror**	
A851978...	1000 mm

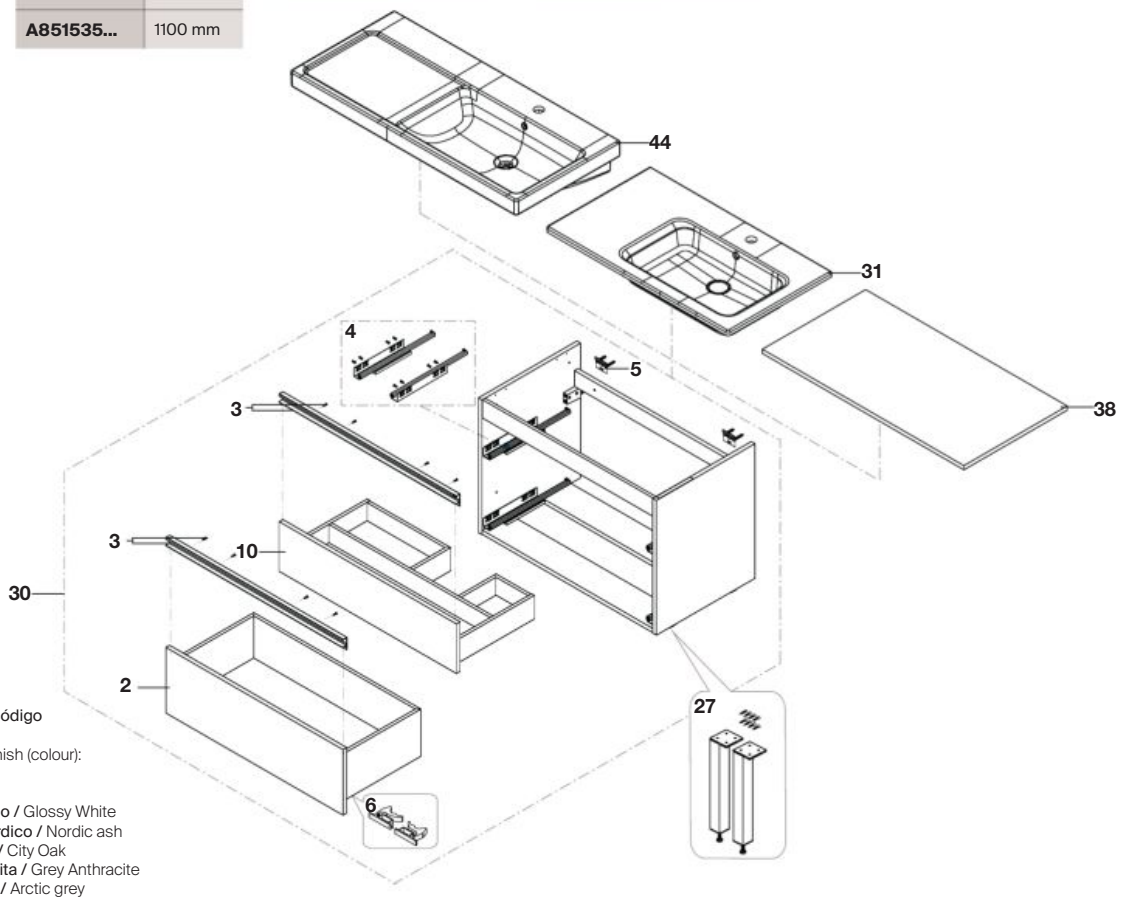

Las últimas posiciones de cada código indican el acabado (color):
The lasts positions indicates the finish (colour):

Producto Product	Recambio Spare Part	Acabado Finish
806	**WH**	**Blanco brillo /** Glossy White
434	**AS**	**Fresno Nordico /** Nordic ash
402	**OA**	**Roble City /** City Oak
153	**GA**	**Gris antracita /** Grey Anthracite
447	**GM**	**Gris Ártico /** Arctic grey
509	**MW**	**Blanco mate /** Matt White
548	**AM**	**Azul mate /** Matt Blue
517	**WL**	**Nogal /** Walnut
547	**GX**	**Gris mate /** Matt grey

				€
2		**AU00706..R**	800 mm	106,00
		AU00709..R	1000 mm	149,00
3	2 un	**AU00729..R**	800 mm	88,80
	2 un	**AU00730..R**	1000 mm	100,00
4	+	**AU0038500R**		20,50
5	2 un	**AU0013300R**		15,80
6	+	**AU0017300R**		4,68
10		**AU00710..R**	800 mm RH	130,00
		AU00711..R	1000 mm RH	173,00

Sólo se muestra el precio del acabado blanco.
It is shown only the white finished price.

Acabados set patas:
Finishes feet set

Recambio Spare part	Acabado Finished
339	**Aluminio /** Aluminium
458	**Níquel /** Nickel
485	**Negro mate /** Black matt

Acabados kit tirador (3):
Finishes Kit handle (3):

Recambio Spare part	Acabado Finished
NI	**Níquel /** Nickel
WH	**Aluminio /** Aluminium
MB	**Negro mate /** Black Matt

Producto acabado compatible:
Finished product compatible:

			€
27	**A816826...**	335 mm	-
30	**A857401...**	800 mm	-
	A857403...	1000 mm	-
31	**A3279A5000**	800 mm	-
	A3279A2000	1000 mm	-
38	**A857419...**	800 mm	-
	A857833...	900 mm	-
	A857834...	1000 mm	-
	A857835...	1100 mm	-
44	**A3270ME004**	1000 mm	-

The Gap

Mueble base dos cajones izquierdo / Base unit two drawers left

UNIK THE GAP STD: MUEBLE BASE 2 CAJONES IZQUIERDO + LAVABO **Base unit 2 drawers + left washbasin**	
A851479...	800 mm
A851481...	1000 mm

UNIK THE GAP OCT: MUEBLE BASE 2 CAJONES + UNIDAD AUXILIAR CON ESTANTE IZQUIERDO + LAVABO IZQUIERDO **Base unit 2 drawers, auxiliar unit with left countertop + washbasin left**	
A851503...	900 mm
A851505...	1100 mm

UNIK THE GAP mural: MUEBLE BASE 2 CAJONES IZQUIERDO + LAVABO **Base unit 2 drawers + wall-hung basin left**	
A851977...	1000 mm

PACK THE GAP OCT: MUEBLE BASE 2 CAJONES IZQUIERDO + LAVABO **Base unit 2 drawers + washbasin left**	
A851959...	1000 mm

PACK THE GAP STD: UNIK THE GAP 2 CAJONES IZQUIERDO + ESPEJO **Unik The Gap 2 drawers left + mirror**	
A851512...	800 mm
A851514...	1000 mm

PACK THE GAP OCT: UNIK THE GAP OCT + LAVABO IZQUIERDO + ESPEJO + ENCIMERA **Unik The Gap OCT + washbasin left + mirror + countertop**	
A851534...	900 mm
A851536...	1100 mm

PACK THE GAP mural: UNIK THE GAP 2 CAJONES IZQUIERDO + ESPEJO **Unik The Gap 2 drawers left + mirror**	
A851971...	1000 mm

PACK THE GAP mural: UNIK THE GAP 2 CAJONES IZQUIERDO + ESPEJO **Base unit 2 drawers left + mirror**	
A851977...	1000 mm

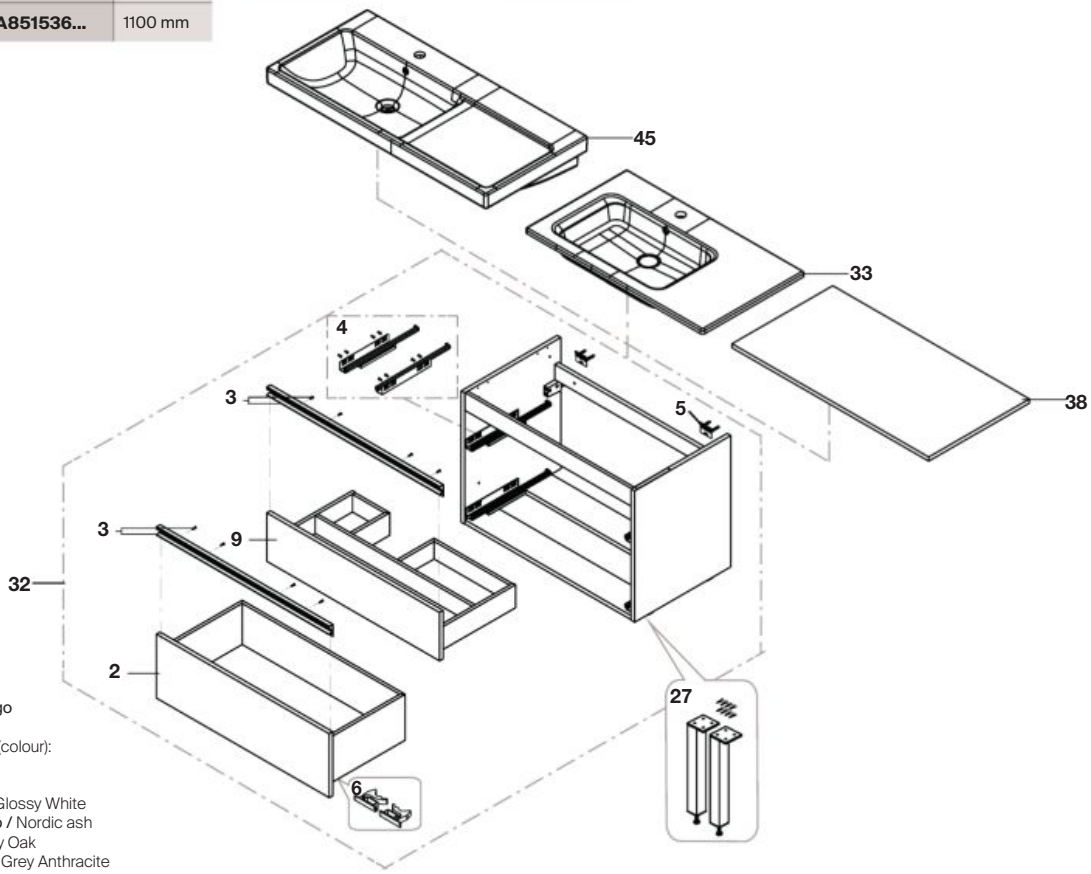

Las últimas posiciones de cada código indican el acabado (color):
The lasts positions indicates the finish (colour):

Producto Product	Recambio Spare Part	Acabado Finish
806	**WH**	**Blanco brillo /** Glossy White
434	**AS**	**Fresno Nordico /** Nordic ash
402	**OA**	**Roble City /** City Oak
153	**GA**	**Gris antracita /** Grey Anthracite
447	**GM**	**Gris Ártico /** Arctic grey
509	**MW**	**Blanco mate /** Matt White
548	**AM**	**Azul mate /** Matt Blue
517	**WL**	**Nogal /** Walnut
547	**GX**	**Gris mate /** Matt grey

				€
2		**AU00706..R**	800 mm	106,00
		AU00709..R	1000 mm	149,00
3	2 un	**AU00729..R**	800 mm	88,80
	2 un	**AU00730..R**	1000 mm	100,00
4	+	**AU0038500R**		20,50
5	2 un	**AU0013300R**		15,80
6	+	**AU0017300R**		4,68
9		**AU00707..R**	800 mm LH	111,00
		AU00708..R	1000 mm LH	170,00

Sólo se muestra el precio del acabado blanco.
It is shown only the white finished price.

Acabados set patas:
Finishes feet set

Recambio Spare part	Acabado Finished
339	**Aluminio /** Aluminium
458	**Níquel /** Nickel
485	**Negro mate /** Black matt

Acabados kit tirador (3):
Finishes Kit handle (3):

Recambio Spare part	Acabado Finished
NI	**Níquel /** Nickel
WH	**Aluminio /** Aluminium
MB	**Negro mate /** Black Matt

Producto acabado compatible:
Finished product compatible:

			€
27	**A816826...**	335 mm	-
32	**A857400...**	800 mm	-
	A857402...	1000 mm	-
33	**A3279A6000**	800 mm	-
	A3279A3000	1000 mm	-
38	**A857419...**	800 mm	-
	A857833...	900 mm	-
	A857834...	1000 mm	-
	A857835...	1100 mm	-
45	**A3270MB004**	1000 mm	-

The Gap

Mueble base tres cajones / Base unit three drawers

UNIK THE GAP MUEBLE BASE 3 CAJONES CON LAVABO **Base unit 3 drawers with washbasin**	
A851623...	550 mm
A851484...	600 mm
A851485...	700 mm
A851486...	800 mm
A851853...	1000 mm
A851493...	1200 mm

PACK THE GAP STD: UNIK THE GAP 3 CAJONES + ESPEJO **Unik The Gap 3 drawers + mirror**	
A851625...	550 mm
A851517...	600 mm
A851518...	700 mm
A851519...	800 mm
A851855...	1000 mm
A851524...	1200 mm

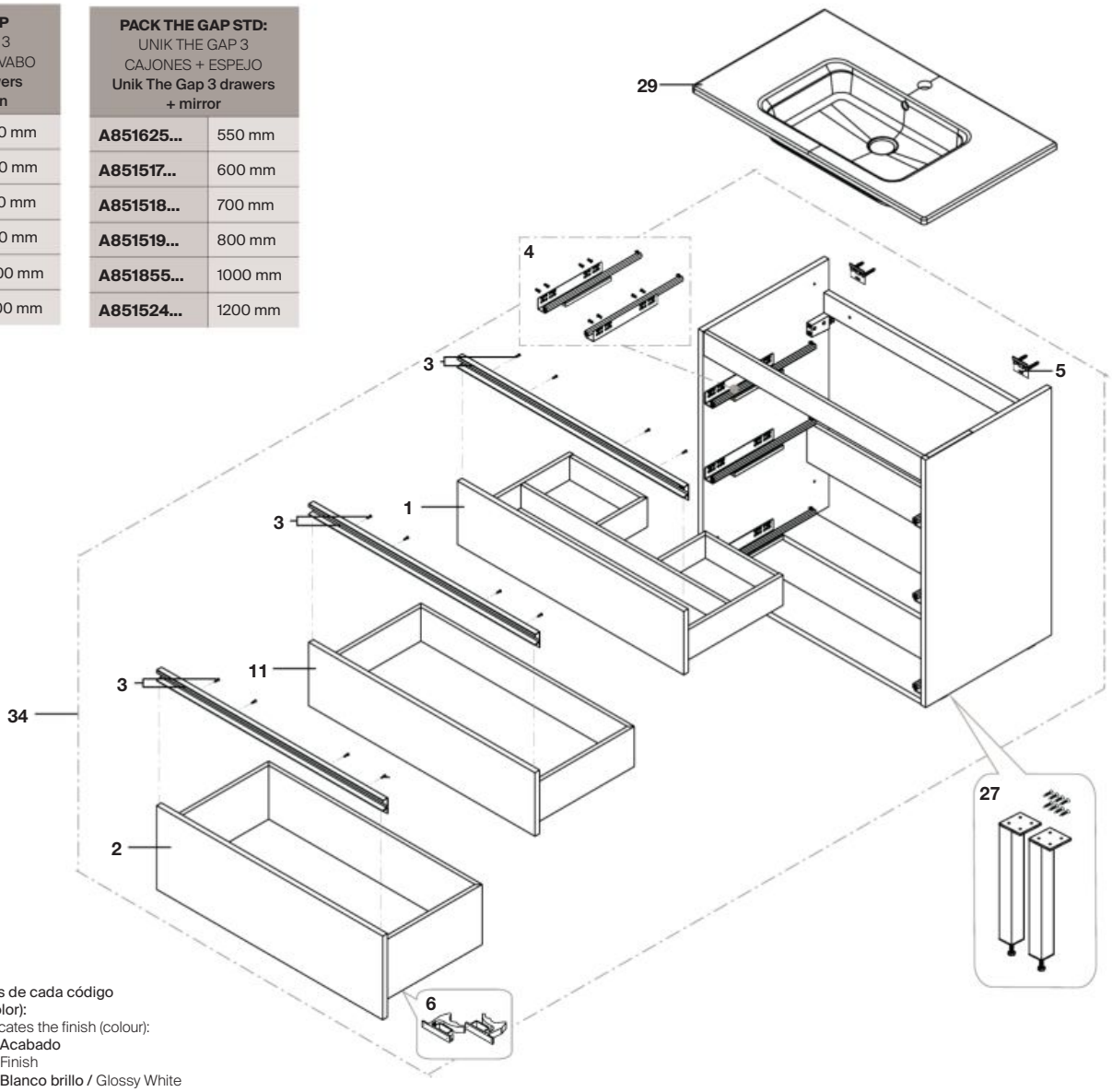

Las últimas posiciones de cada código indican el acabado (color):
The lasts positions indicates the finish (colour):

Producto Product	Recambio Spare Part	Acabado Finish
806	**WH**	**Blanco brillo /** Glossy White
434	**AS**	**Fresno Nordico /** Nordic ash
402	**OA**	**Roble City /** City Oak
153	**GA**	**Gris antracita /** Grey Anthracite
447	**GM**	**Gris Ártico /** Arctic grey
509	**MW**	**Blanco mate /** Matt White
548	**AM**	**Azul mate /** Matt Blue
517	**WL**	**Nogal /** Walnut
547	**GX**	**Gris mate /** Matt grey

Acabados kit tirador (3):
Finishes Kit handle (3):

Recambio Spare part	Acabado Finished
NI	**Níquel /** Nickel
WH	**Aluminio /** Aluminium
MB	**Negro mate /** Black Matt

Acabados set patas:
Finishes feet set

Recambio Spare part	Acabado Finished
339	**Aluminio /** Aluminium
458	**Níquel /** Nickel
485	**Negro mate /** Black matt

				€
1		**AU00896..R**	550 mm	166,00
		AU00701..R	600 mm	99,70
		AU00703..R	700 mm	101,00
		AU00705..R	800 mm	168,00
		AU01001..R	1000 mm	225,00
2		**AU00897..R**	550 mm	135,00
		AU00702..R	600 mm	91,30
		AU00704..R	700 mm	98,30
		AU00706..R	800 mm	106,00
		AU00709..R	1000 mm	149,00
3	2 un	**AU00899..R**	550 mm	108,00
	2 un	**AU00727..R**	600 mm	76,20
	2 un	**AU00728..R**	700 mm	81,50
	2 un	**AU00729..R**	800 mm	88,80
	2 un	**AU00730..R**	1000 mm	100,00

				€
4		**AU0038500R**		20,50
5	2 un	**AU0013300R**		15,80
6		**AU0017300R**		4,68
11		**AU00898..R**	550 mm	110,00
		AU00712..R	600 mm	76,30
		AU00713..R	700 mm	110,00
		AU00714..R	800 mm	98,80
		AU00715..R	1000 mm	116,00

Sólo se muestra el precio del acabado Blanco /
Only the price of the White finish is shown

Producto acabado compatible:
Finished product compatible:

			€
27	**A816827...**	110 mm	-
34	**A857524...**	550 mm	-
	A857404...	600 mm	-
	A857405...	700 mm	-
	A857406...	800 mm	-
	A857725	1000 mm	-
29	**A3279AJ000**	550 mm	-
	A3279A8000	600 mm	-
	A3279A7000	700 mm	-
	A3279A4000	800 mm	-
	A3279A1000	1000 mm	-

The Gap

Mueble base tres cajones derecho / Base unit three drawers right

UNIK THE GAP STD: MUEBLE BASE 3 CAJONES DERECHO **Base unit 3 drawers right**	
A851489...	800 mm
A851492...	1000 mm

PACK THE GAP STD: UNIK THE GAP 3 CAJONES DERECHO + ESPEJO **Unik The Gap 3 drawers right + mirror**	
A851521...	800 mm
A851523...	1000 mm

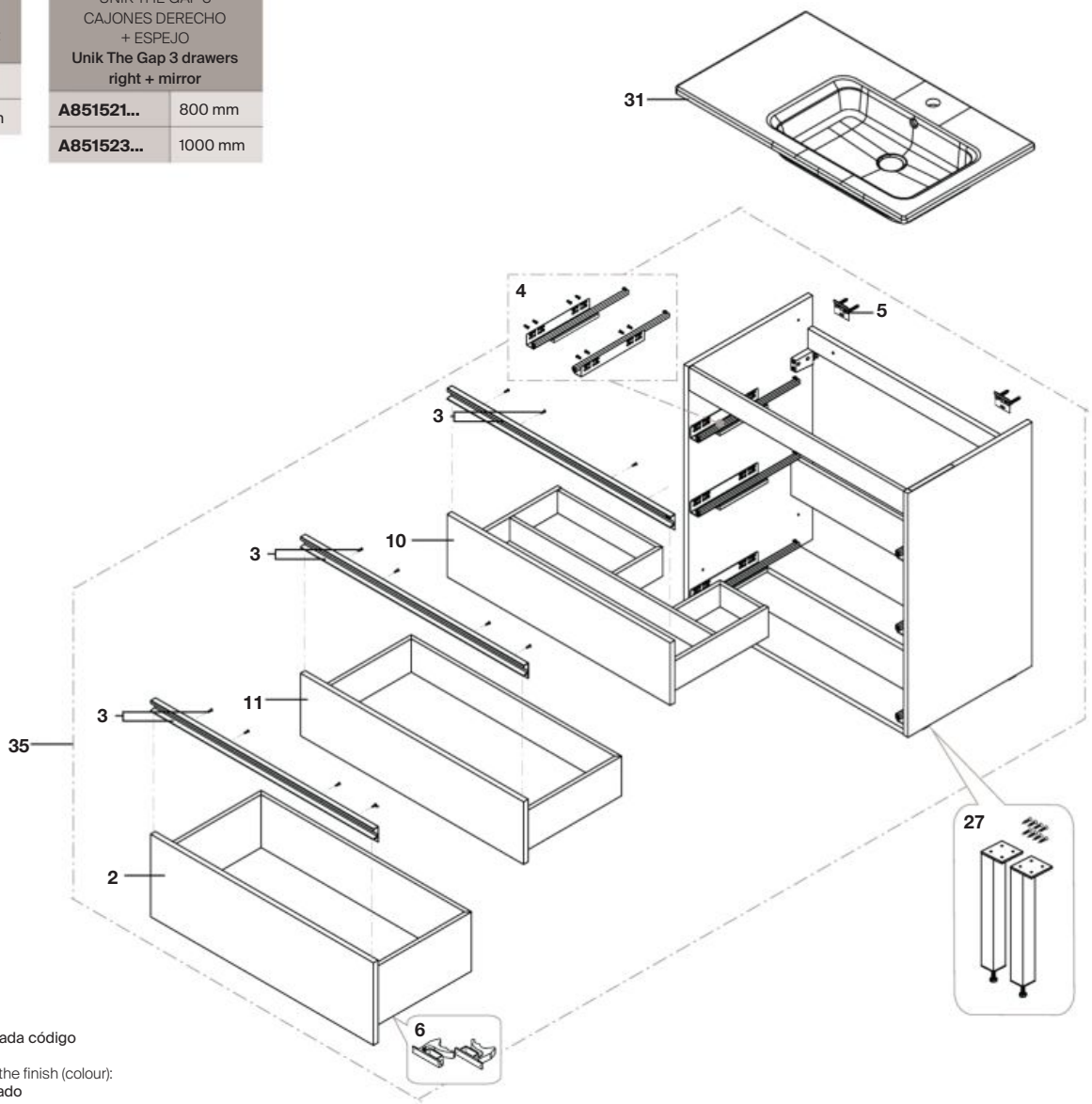

Las últimas posiciones de cada código indican el acabado (color):
The lasts positions indicates the finish (colour):

Producto Product	Recambio Spare Part	Acabado Finish
806	**WH**	**Blanco brillo /** Glossy White
434	**AS**	**Fresno Nordico /** Nordic ash
402	**OA**	**Roble City /** City Oak
153	**GA**	**Gris antracita /** Grey Anthracite
447	**GM**	**Gris Ártico /** Arctic grey
509	**MW**	**Blanco mate /** Matt White
548	**AM**	**Azul mate /** Matt Blue
517	**WL**	**Nogal /** Walnut
547	**GX**	**Gris mate /** Matt grey

				€
2		**AU00706..R**	800 mm	106,00
		AU00709..R	1000 mm	149,00
3	2 un	**AU00729..R**	800 mm	88,80
	2 un	**AU00730..R**	1000 mm	100,00
4	+	**AU0038500R**		20,50
5	2 un	**AU0013300R**		15,80
6	+	**AU0017300R**		4,68
10		**AU00710..R**	800 mm	130,00
		AU00711..R	1000 mm	173,00
11		**AU00714..R**	800 mm	98,80
		AU00715..R	1000 mm	116,00

Sólo se muestra el precio del acabado Blanco /
Only the price of the White finish is shown

Acabados kit tirador (3):
Finishes Kit handle (3):

Recambio Spare part	Acabado Finished
NI	**Níquel /** Nickel
WH	**Aluminio /** Aluminium
MB	**Negro mate /** Black Matt

Acabados set patas:
Finishes feet set

Recambio Spare part	Acabado Finished
339	**Aluminio /** Aluminium
458	**Níquel /** Nickel
485	**Negro mate /** Black matt

Producto acabado compatible:
Finished product compatible:

			€
27	**A816826...**	335 mm	-
35	**A857408...**	800 mm	-
	A857409...	1000 mm	-
31	**A3279A5000**	800 mm	-
	A3279A2000	1000 mm	-

The Gap

Mueble base tres cajones izquierdo / Base unit three drawers left

UNIK THE GAP STD: MUEBLE BASE 3 CAJONES IZQUIERDO **Base unit 3 drawers left**	
A851487...	800 mm
A851491...	1000 mm

PACK THE GAP STD: UNIK THE GAP 3 CAJONES IZQUIERDO + ESPEJO **Unik The Gap 3 drawers left + mirror**	
A851520...	800 mm
A851522...	1000 mm

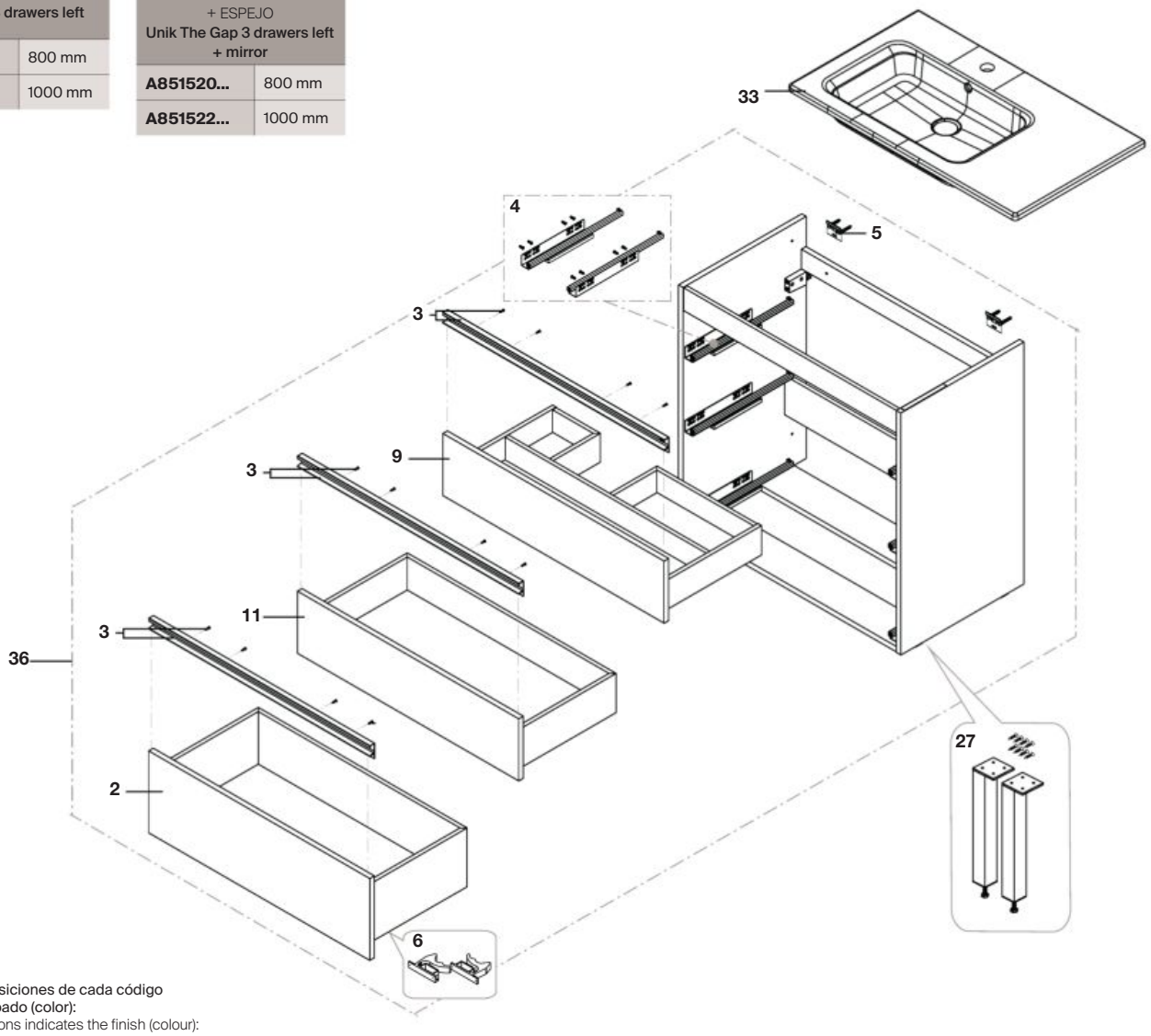

Las últimas posiciones de cada código indican el acabado (color):
The lasts positions indicates the finish (colour):

Producto Product	Recambio Spare Part	Acabado Finish
806	**WH**	**Blanco brillo /** Glossy White
434	**AS**	**Fresno Nordico /** Nordic ash
402	**OA**	**Roble City /** City Oak
153	**GA**	**Gris antracita /** Grey Anthracite
447	**GM**	**Gris Ártico /** Arctic grey
509	**MW**	**Blanco mate /** Matt White
548	**AM**	**Azul mate /** Matt Blue
517	**WL**	**Nogal /** Walnut
547	**GX**	**Gris mate /** Matt grey

				€
2		**AU00706..R**	800 mm	106,00
		AU00709..R	1000 mm	149,00
3	2 un	**AU00729..R**	800 mm	88,80
	2 un	**AU00730..R**	1000 mm	100,00
4	+	**AU0038500R**		20,50
5	2 un	**AU0013300R**		15,80
6	+	**AU0017300R**		4,68
9		**AU00707..R**	800 mm	111,00
		AU00708..R	1000 mm	170,00
11		**AU00714..R**	800 mm	98,80
		AU00715..R	1000 mm	116,00

Sólo se muestra el precio del acabado Blanco /
Only the price of the White finish is shown

Acabados kit tirador (3):
Finishes Kit handle (3):

Recambio Spare part	Acabado Finished
NI	**Níquel /** Nickel
WH	**Aluminio /** Aluminium
MB	**Negro mate /** Black Matt

Acabados set patas:
Finishes feet set

Recambio Spare part	Acabado Finished
339	**Aluminio /** Aluminium
458	**Níquel /** Nickel
485	**Negro mate /** Black matt

Producto acabado compatible:
Finished product compatible:

			€
27	**A816827...**	110 mm	-
36	**A857407...**	800 mm	-
	A857409...	1000 mm	-
33	**A3279A6000**	800 mm	-
	A3279A3000	1000 mm	-

The Gap

Mueble base dos cajones y una puerta con lavabo a derecha / Base unit two drawers & one door with right basin

UNIK THE GAP STD: MUEBLE BASE 2 CAJONES + 1 PUERTA + LAVABO DERECHO **Base unit 2 drawers + right washbasin**	
A851997...	1000 mm

PACK THE GAP OCT: UNIK THE GAP 2 CAJONES Y 1 PUERTA DERECHO + ENCIMERA **Unik the gap 2 drawers & 1 door right + countertop**	
A851956...	1000 mm

UNIK THE GAP mural: MUEBLE BASE 2 CAJONES + 1 PUERTA + LAVABO DERECHO **Base unit 2 drawers + 1 door + washbasin right**	
A851969...	1000 mm

PACK THE GAP STD: UNIK THE GAP 2 CAJONES Y 1 PUERTA DERECHO + ESPEJO **Unik The Gap 2 drawers & 1 door right + mirror**	
A851999...	1000 mm

PACK THE GAP OCT: UNIK THE GAP 2 CAJONES Y 1 PUERTA DERECHO + ESPEJO + ENCIMERA **Unik The Gap 2 drawers & 1 door right + mirror + countertop**	
A852001...	1000 mm

PACK THE GAP mural: UNIK THE GAP 2 CAJONES Y 1 PUERTA DERECHO + ESPEJO **Base unit 2 drawers & 1 door right + mirror**	
A851980...	1000 mm

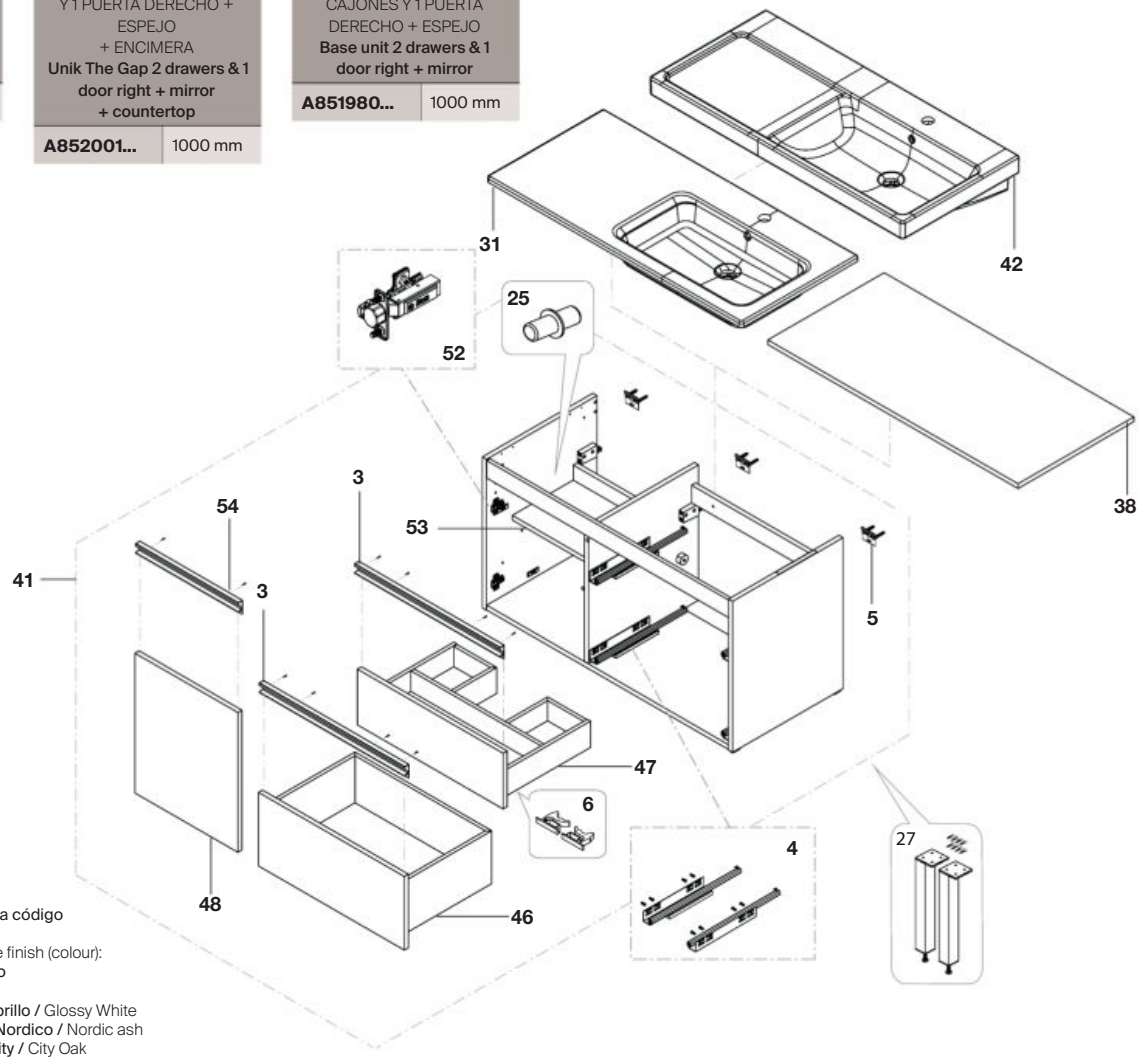

Las últimas posiciones de cada código indican el acabado (color):
The lasts positions indicates the finish (colour):

Producto Product	Recambio Spare Part	Acabado Finish
806	**WH**	**Blanco brillo /** Glossy White
434	**AS**	**Fresno Nordico /** Nordic ash
402	**OA**	**Roble City /** City Oak
509	**MW**	**Blanco mate /** Matt White
548	**AM**	**Azul mate /** Matt Blue
517	**WL**	**Nogal /** Walnut
547	**GX**	**Gris mate /** Matt grey

				€
3	2 un	**AU00767..R**	572 mm	122,00
4	+	**AU0038500R**		20,50
5	2 un	**AU0013300R**		15,80
6	+	**AU0017300R**		4,68
25	4 un	**AU0013900R**		8,63
46		**AU00766..R**	600 mm	148,00
47		**AU00758..R**	600 mm	121,00
48		**AU01053..R**	400 mm	72,20
52	2 un	**AU0089500R**		18,00
53		**AU00765..R**		7,90
54	1 un	**AU00768..R**	400 mm	50,70

Sólo se muestra el precio del acabado Blanco /
Only the price of the White finish is shown

Acabados set patas:
Finishes feet set

Recambio Spare part	Acabado Finished
339	**Aluminio /** Aluminium
458	**Níquel /** Nickel
485	**Negro mate /** Black matt

Acabados kit tirador (3):
Finishes Kit handle (3):

Recambio Spare part	Acabado Finished
NI	**Níquel /** Nickel
WH	**Aluminio /** Aluminium
MB	**Negro mate /** Black Matt

Producto acabado compatible:
Finished product compatible:

			€
27	**A816826...**	335 mm	-
31	**A3279A2000**	1000 mm	-
38	**A857834...**	1000 mm	-
41	**A857832...**	1000 mm	-
42	**A3270ME000**	1000 mm	-

The Gap

Mueble base dos cajones y una puerta con lavabo a izquierda /
Base unit two drawers & one door with left basin

UNIK THE GAP STD: MUEBLE BASE 2 CAJONES + 1 PUERTA + LAVABO IZQUIERDO **Base unit 2 drawers + left washbasin**	
A851996...	1000 mm

PacK THE GAP OCT: UNIK THE GAP 2 CAJONES Y 1 PUERTA IZQUIERDO + ENCIMERA **Unik the gap 2 drawers & 1 door left + countertop**	
A851957...	1000 mm

UNIK THE GAP mural: MUEBLE BASE 2 CAJONES + 1 PUERTA + LAVABO IZQUIERDO **Base unit 2 drawers + 1 door + washbasin left**	
A851969...	1000 mm

PACK THE GAP STD: UNIK THE GAP 2 CAJONES Y 1 PUERTA IZQUIERDO + ESPEJO **Unik The Gap 2 drawers & 1 door left + mirror**	
A851998...	1000 mm

PACK THE GAP OCT: UNIK THE GAP 2 CAJONES Y 1 PUERTA IZQUIERDO + ESPEJO + ENCIMERA **Unik The Gap 2 drawers & 1 door left + mirror + countertop**	
A852000...	1000 mm

PACK THE GAP mural: UNIK THE GAP 2 CAJONES Y 1 PUERTA IZQUIERDO + ESPEJO **Base unit 2 drawers & 1 door left + mirror**	
A851979...	1000 mm

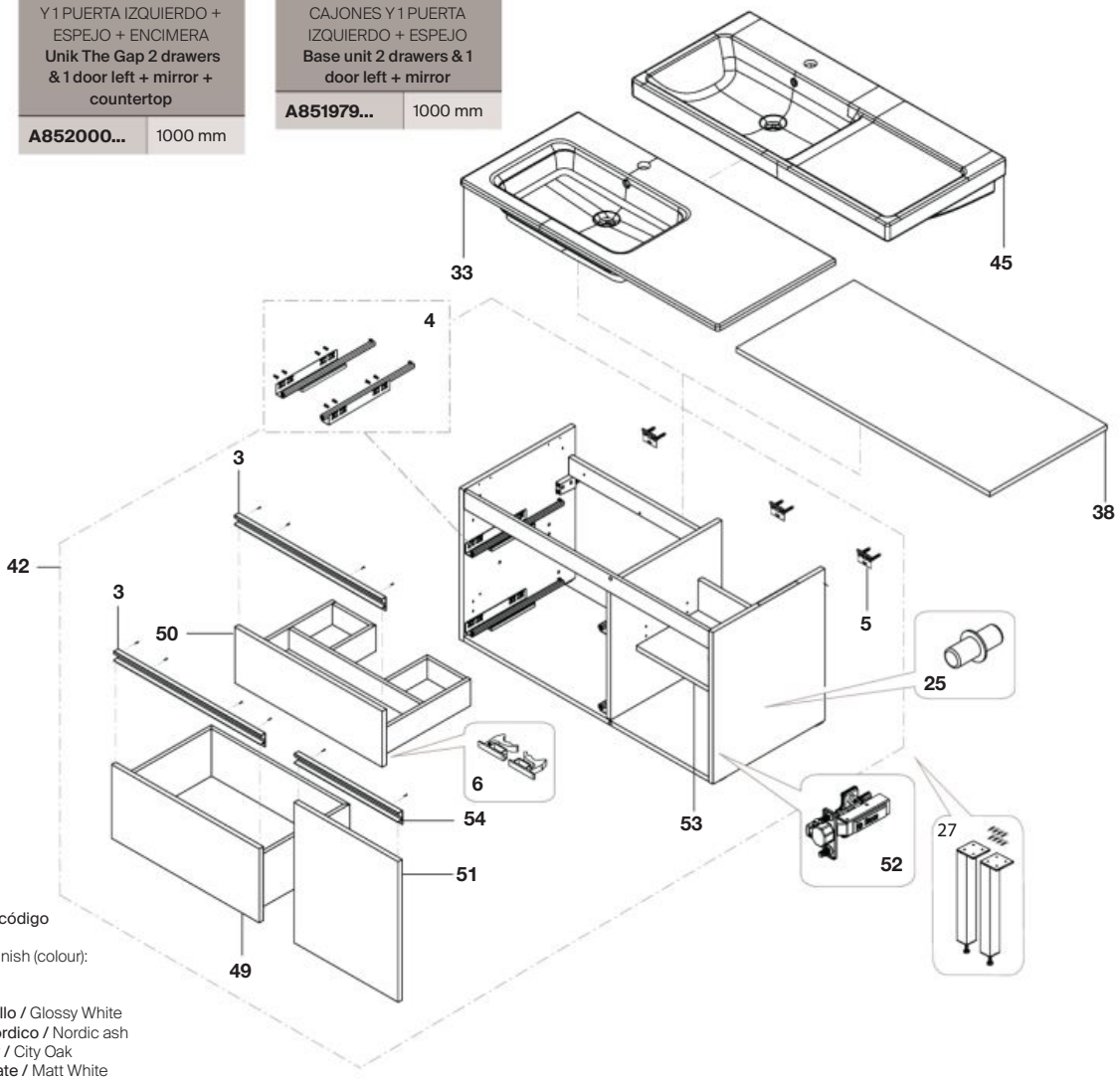

Las últimas posiciones de cada código indican el acabado (color):
The lasts positions indicates the finish (colour):

Producto Product	Recambio Spare Part	Acabado Finish
806	**WH**	**Blanco brillo /** Glossy White
434	**AS**	**Fresno Nordico /** Nordic ash
402	**OA**	**Roble City /** City Oak
509	**MW**	**Blanco mate /** Matt White
548	**AM**	**Azul mate /** Matt Blue
517	**WL**	**Nogal /** Walnut
547	**GX**	**Gris mate /** Matt grey

				€/
3	2 un	**AU00767..R**	572 mm	122,00
4	+	**AU0038500R**		20,50
5	2 un	**AU0013300R**		15,80
6	+	**AU0017300R**		4,68
25	4 un	**AU0013900R**		8,63
49		**AU00770..R**	600 mm	121,00
50		**AU00769..R**	600 mm	148,00
51		**AU01056..R**	400 mm	72,20
52	2 un	**AU0089500R**		18,00
53		**AU00765..R**		7,90
54	1 un	**AU00768..R**	400 mm	50,70

Sólo se muestra el precio del acabado Blanco /
Only the price of the White finish is shown

Acabados set patas:
Finishes feet set

Recambio Spare part	Acabado Finished
339	**Aluminio /** Aluminium
458	**Níquel /** Nickel
485	**Negro mate /** Black matt

Acabados kit tirador (3):
Finishes Kit handle (3):

Recambio Spare part	Acabado Finished
NI	**Níquel /** Nickel
WH	**Aluminio /** Aluminium
MB	**Negro mate /** Black Matt

Producto acabado compatible:
Finished product compatible:

			€/
27	**A816826...**	335 mm	-
33	**A3279A3000**	1000 mm	-
38	**A857834...**	1000 mm	-
42	**A857831...**	1000 mm	-
45	**A3270MB004**	1000 mm	-

The Gap

Mueble auxiliar de una puerta / Auxiliar unit one door

MUEBLE AUXILIAR 1 PUERTA Auxiliar unit 1 door	
A857417...	300 mm

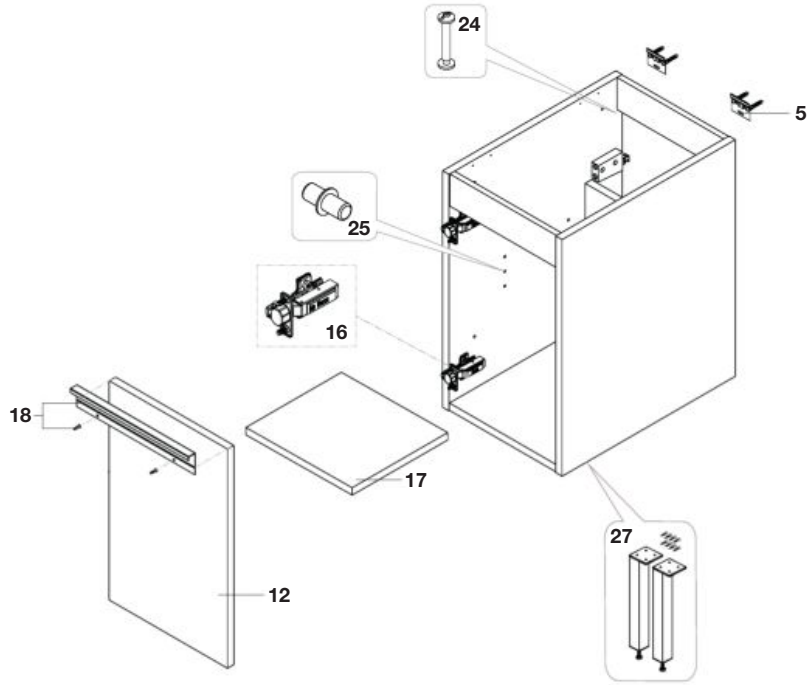

Las últimas posiciones de cada código indican el acabado (color):
The lasts positions indicates the finish (colour):

Producto Product	Recambio Spare Part	Acabado Finish
806	**WH**	**Blanco brillo /** Glossy White
434	**AS**	**Fresno Nordico /** Nordic ash
402	**OA**	**Roble City /** City Oak
153	**GA**	**Gris antracita /** Grey Anthracite
447	**GM**	**Gris Ártico /** Arctic grey
509	**MW**	**Blanco mate /** Matt White
548	**AM**	**Azul mate /** Matt Blue
517	**WL**	**Nogal /** Walnut
547	**GX**	**Gris mate /** Matt grey

			€
5	2 un	**AU0013300R**	15,80
12		**AU00689..R**	70,80
16*	2 un	**AU0067200R**	43,30
	2 un	**AU0089500R**	18,00
17**		**AU0068800R**	10,70
18		**AU00741..R**	38,80
24	5 un	**AU0020900R**	14,80
25	4 un	**AU0013900R**	8,63

Sólo se muestra el precio del acabado Blanco /
Only the price of the White finish is shown

* AU0067200R para los siguientes acabados /
for the following finishes: 806, 434, 402, 153.
AU0089500R para los siguientes acabados /
for the following finishes: 509, 548, 517, 547.
** Todos los estantes 17 tienen el mismo acabado:
418 Tortora /
All shelves 17 have the same finishes: 418/Tortora

Acabados kit tirador (3):
Finishes Kit handle (3):

Recambio Spare part	Acabado Finished
NI	**Níquel /** Nickel
WH	**Aluminio /** Aluminium
MB	**Negro mate /** Black Matt

Acabados set patas (27):
Finishes feet set (27)

Recambio Spare part	Acabado Finished
339	**Plata /** Silver
458	**Níquel /** Nickel
485	**Negro mate /** Matt Black

Producto acabado compatible:
Finished product compatible:

			€
27	**A816826...**	335 mm	-
	A816829...	275 mm	-
	A816827...	110 mm	-

The Gap

Columna de dos puertas / Two doors column

columna 2 PUERTAs Column 2 doors	
A857427...	1500 mm

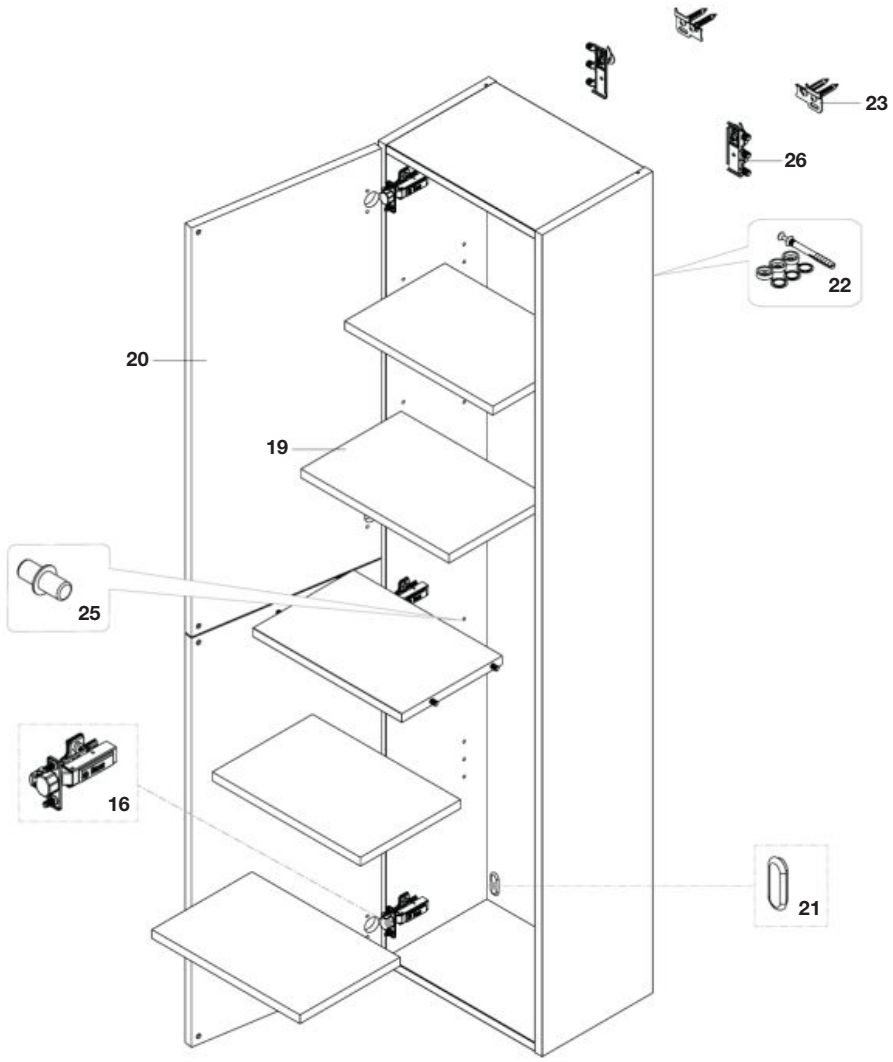

Las últimas posiciones de cada código indican el acabado (color):
The lasts positions indicates the finish (colour):

Producto Product	Recambio Spare part	Acabado Finished
806	**WH**	**Blanco brillo /** White Lacquered
434	**AS**	**Fresno /** Nordic ash
155	**OA**	**Roble /** Urban oak
153	**GA**	**Gris antracita /** Grey Anthracite
447	**GM**	**Gris mate /** Matt grey

			€
16	2 un	**AU0067200R**	43,30
19		**AU00699WHR**	34,50
		AU00699ASR	39,50
		AU00699OAR	38,80
		AU00699GAR	36,00
		AU00699GMR	38,50

			€
20		**AU00698WHR**	65,80
		AU00698ASR	63,70
		AU00698OAR	66,50
		AU00698GAR	60,30
		AU00698GMR	64,30
21	4 un	**AU0013700R**	16,30

			€
21	4 un	**AU0013700R**	16,30
26	+		
22	1 un	**AU0013800R**	12,10
23	+		
25	4 un	**AU0013900R**	8,63

The Gap

Mueble base compacto dos cajones + lavabo CPT / Base unit compact two drawers + washbasin CPT

UNIK THE GAP: MUEBLE BASE CPT 2 CAJONES CON LAVABO **Base unit cpt 2 drawers with washbasin**	
A851494...	500 mm
A851495...	600 mm
A851496...	700 mm
A851497...	800 mm

PACK THE GAP: UNIK THE GAP CPT 2 CAJONES + ESPEJO **Unik The Gap cpt 2 drawers + mirror**	
A851525...	500 mm
A851526...	600 mm
A851527...	700 mm
A851528...	800 mm

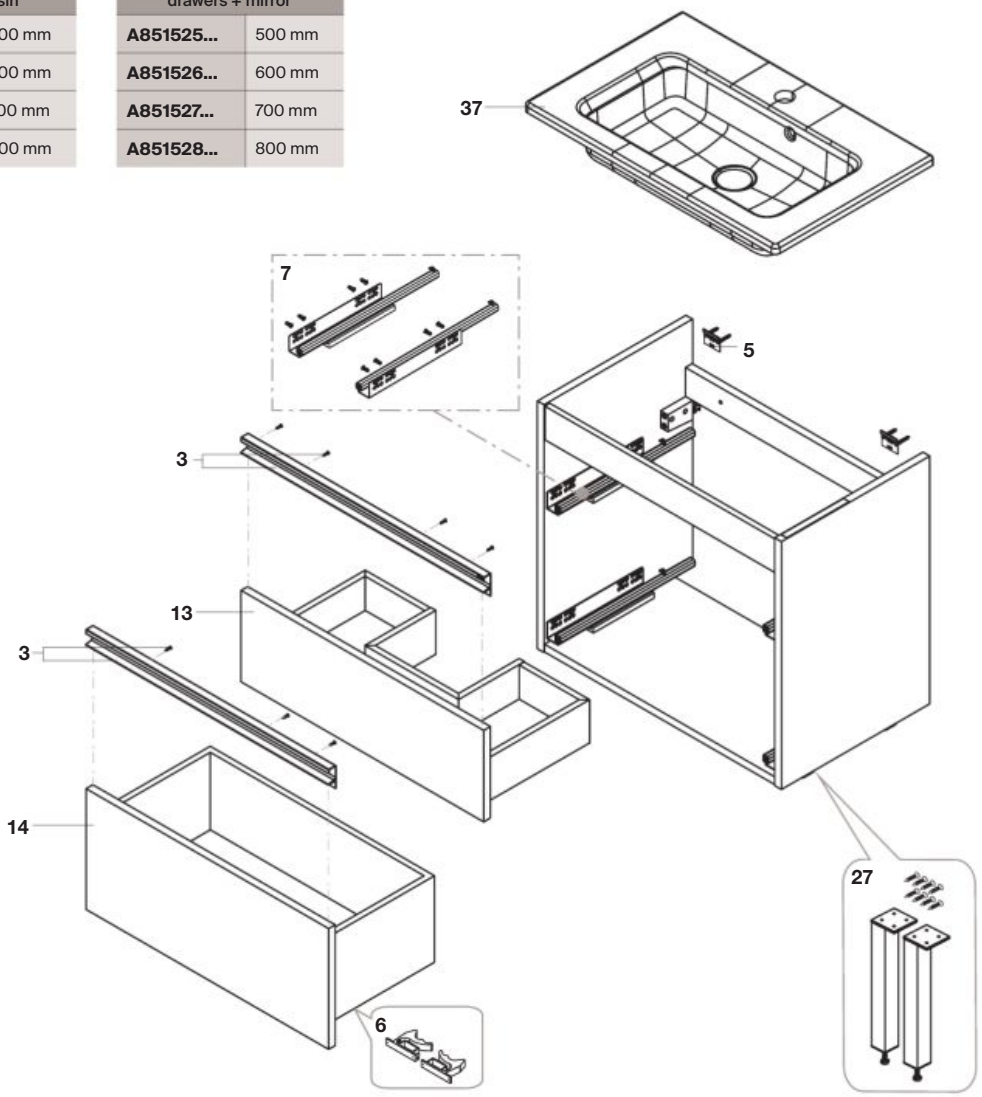

Las últimas posiciones de cada código indican el acabado (color):
The lasts positions indicates the finish (colour):

Producto Product	Recambio Spare Part	Acabado Finish
806	**WH**	**Blanco brillo /** Glossy White
434	**AS**	**Fresno Nordico /** Nordic ash
402	**OA**	**Roble City /** City Oak
153	**GA**	**Gris antracita /** Grey Anthracite
447	**GM**	**Gris Ártico /** Arctic grey
509	**MW**	**Blanco mate /** Matt White
548	**AM**	**Azul mate /** Matt Blue
517	**WL**	**Nogal /** Walnut
547	**GX**	**Gris mate /** Matt grey

Sólo se muestra el precio del acabado blanco.
It is shown only the white finished price.

Acabados kit tirador (3):
Finishes Kit handle (3):

Recambio Spare part	Acabado Finished
NI	**Níquel /** Nickel
WH	**Aluminio /** Aluminium
MB	**Negro mate /** Black Matt

Acabados set patas:
Finishes feet set

Recambio Spare part	Acabado Finished
339	**Aluminio /** Aluminium
458	**Níquel /** Nickel
485	**Negro mate /** Black matt

				€
3	2 un	**AU00726..R**	500 mm	68,00
	2 un	**AU00727..R**	600 mm	76,20
	2 un	**AU00728..R**	700 mm	81,50
	2 un	**AU00729..R**	800 mm	88,80
5	2 un	**AU0013300R**		15,80
6	+	**AU0017300R**		4,68
7	+	**AU0030000R**		29,70

			€
13	**AU00731..R**	500 mm	87,20
	AU00732..R	600 mm	95,80
	AU00733..R	700 mm	100,00
	AU00734..R	800 mm	108,00
14	**AU00735..R**	500 mm	81,00
	AU00736..R	600 mm	90,30
	AU00737..R	700 mm	96,30
	AU00738..R	800 mm	104,00

Producto acabado compatible:
Finished product compatible:

			€
27	**A816826...**	335 mm	-
37	**A3279AD000**	500 mm	-
	A3279AC000	600 mm	-
	A3279AB000	700 mm	-
	A3279AA000	800 mm	-

The Gap

Mueble base compacto tres cajones + lavabo CPT / Base unit compact three drawers + washbasin CPT

UNIK THE GAP MUEBLE BASE CPT 3 CAJONES CON LAVABO **Base unit cpt 3 drawers with washbasin**	
A851498...	600 mm
A851499...	800 mm

PACK THE GAP UNIK THE GAP CP 3 CAJONES + ESPEJO **Unik The Gap cpt 3 drawers + mirror**	
A851529...	600 mm
A851530...	800 mm

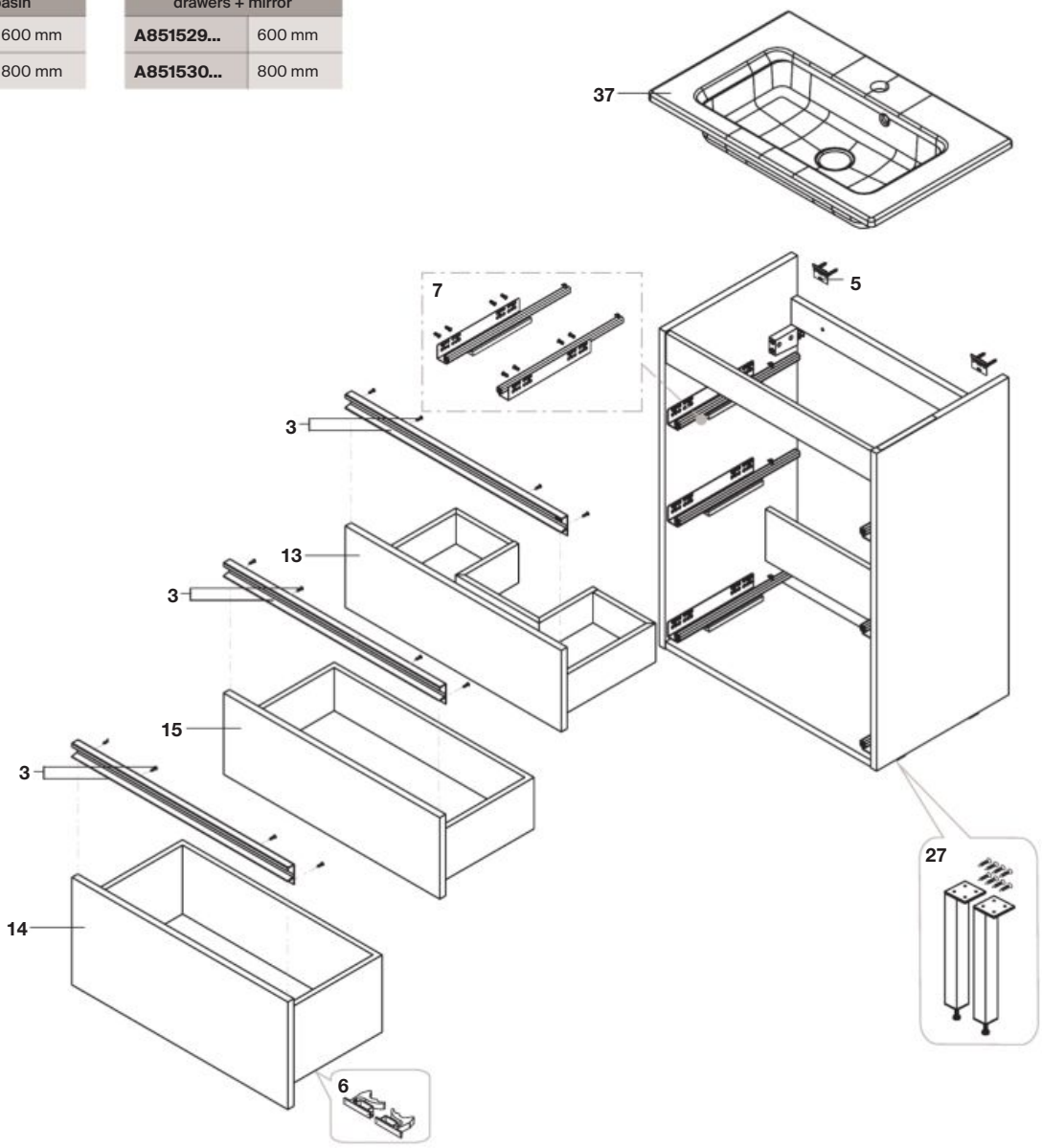

Las últimas posiciones de cada código indican el acabado (color):
The lasts positions indicates the finish (colour):

Producto Product	**Recambio Spare Part**	**Acabado Finish**
806	WH	Blanco brillo / Glossy White
434	AS	Fresno Nordico / Nordic ash
402	OA	Roble City / City Oak
153	GA	Gris antracita / Grey Anthracite
447	GM	Gris Ártico / Arctic grey
509	MW	Blanco mate / Matt White
548	AM	Azul mate / Matt Blue
517	WL	Nogal / Walnut
547	GX	Gris mate / Matt grey

Sólo se muestra el precio del acabado Blanco /
Only the price of the White finish is shown

Acabados kit tirador (3):
Finishes Kit handle (3):

Recambio Spare part	Acabado Finished
NI	Níquel / Nickel
WH	Aluminio / Aluminium
MB	Negro mate / Black Matt

Acabados set patas:
Finishes feet set

Recambio Spare part	Acabado Finished
339	Aluminio / Aluminium
458	Níquel / Nickel
485	Negro mate / Black matt

				€
3	2 un	**AU00727..R**	600 mm	76,20
	2 un	**AU00729..R**	800 mm	88,80
5	2 un	**AU0013300R**		15,80
6	+	**AU0017300R**		4,68
7	+	**AU0030000R**		29,70

			€
13	**AU00732..R**	600 mm	95,80
	AU00734..R	800 mm	108,00
14	**AU00736..R**	600 mm	90,30
	AU00738..R	800 mm	104,00
15	**AU00739..R**	600 mm	84,80
	AU00740..R	800 mm	97,30

Producto acabado compatible:
Finished product compatible:

			€
27	**A816827...**	110 mm	-
37	**A3279AC000**	600 mm	-
	A3279AA000	800 mm	-

The Gap Original

RECAMBIOS PARA NUEVAS REFERENCIAS THE GAP POSTERIORES A 2015. MUEBLES CON EL INTERIOR EN ACABADO GRIS TEXTURIZADO (IMAGEN A). PARA LAS REFERENCIAS ANTERIORES A 2015 CON EL INTERIOR DE LOS CAJONES EN ACABADO METÁLICO (A855712..., A855711..., A855710..., A855860..., A855862..., A855861...) (IMAGEN B) VER EN LAS PÁGINAS DE LA 191 A LA 194.

SPARE PARTS FOR THE NEW REFERENCES AFTER 2015. FURNITURES WITH THE INSIDE IN GREY TEXTURED FINISHED.(IMAGE A). FOR THE REFERENCES BEFORE 2015 WITH THE INSIDE OF THE DRAWERS IN METALLIC FINISHED (A855712..., A855711..., A855710..., A855860..., A855862..., A855861...) (IMAGE B) SEE IN PAGES 191 TO 194.

A

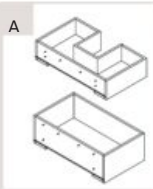

B

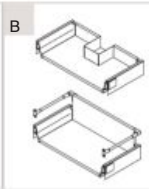

Mueble base de dos cajones con lavabo
Two drawers vanity unit with washbasin

PACK THE GAP	
1000	**A851060...**
800	**A851059...**
600	**A851058...**

UNIK THE GAP	
1000	**A855999...**
800	**A855998...**
600	**A855997...**

A

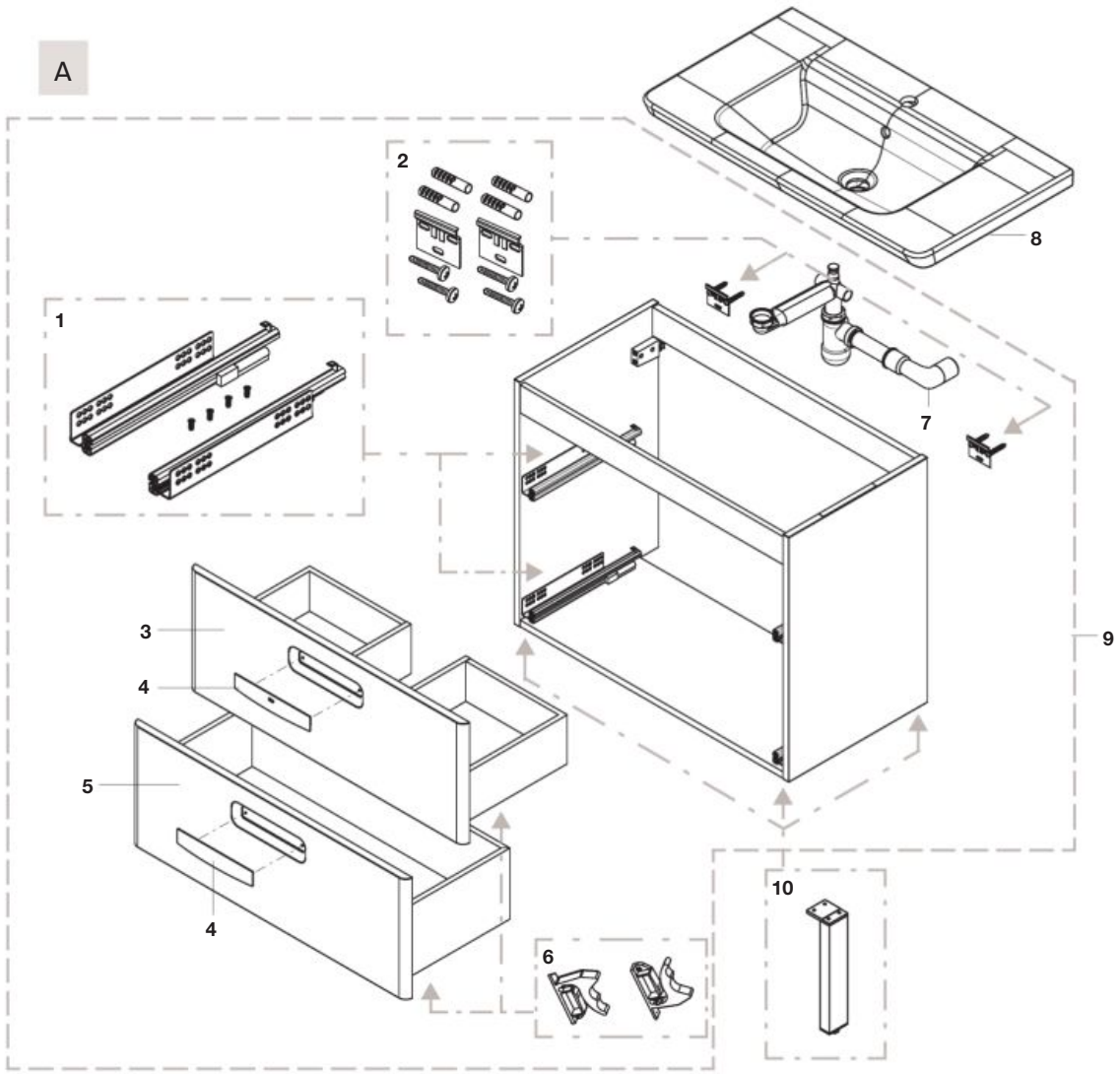

Las últimas posiciones de cada código indican el acabado (color):
The last positions indicates the finish (colour):

Producto Product	Recambio Spare part	Acabado Finished
806	**WH**	**Blanco brillo /** White Lacquered
385	**70**	**Uva mate /** Grape
150	**TK**	**Teka texturizado /** Mood Teka

				€
1		**AU0030100R**		49,00
2		**AU0013300R**		15,80
3		**AU0030370R**		N.D.
		AU00303TKR	600mm	103,00
		AU00303WHR		116,00
		AU0030570R		N.D.
		AU00305TKR	800mm	97,70
		AU00305WHR		146,00
		AU0028470R		N.D.
		AU00284TKR	1000mm	137,00
		AU00284WHR		N.D.
4	2 un	**AU00302C0R**		44,50

				€
5		**AU0030470R**		103,00
		AU00304TKR	600mm	103,00
		AU00304WHR		114,00
		AU0030670R		95,20
		AU00306TKR	800mm	76,30
		AU00306WHR		134,00
		AU0028570R		N.D.
		AU00285TKR	1000mm	127,00
		AU00285WHR		146,00
6		**AU0017300R**		4,68
7		**AU0014100R**		44,90

Producto acabado compatible:
Finished product compatible:

				€
8	**A327470000**	800mm		-
	A327472000	600mm		-
	A32747T000	1000mm		-
9	**A856962806**			N.D.
	A856962385	600mm		-
	A856962150			-
	A856963806			-
	A856963385	800mm		-
	A856963150			-
	A856964806			-
	A856964385	1000mm		-
	A856964150			-
10	**A816809339**	220mm		-

The Gap Original

Columna de una puerta / One door column

A856969...	1200 mm

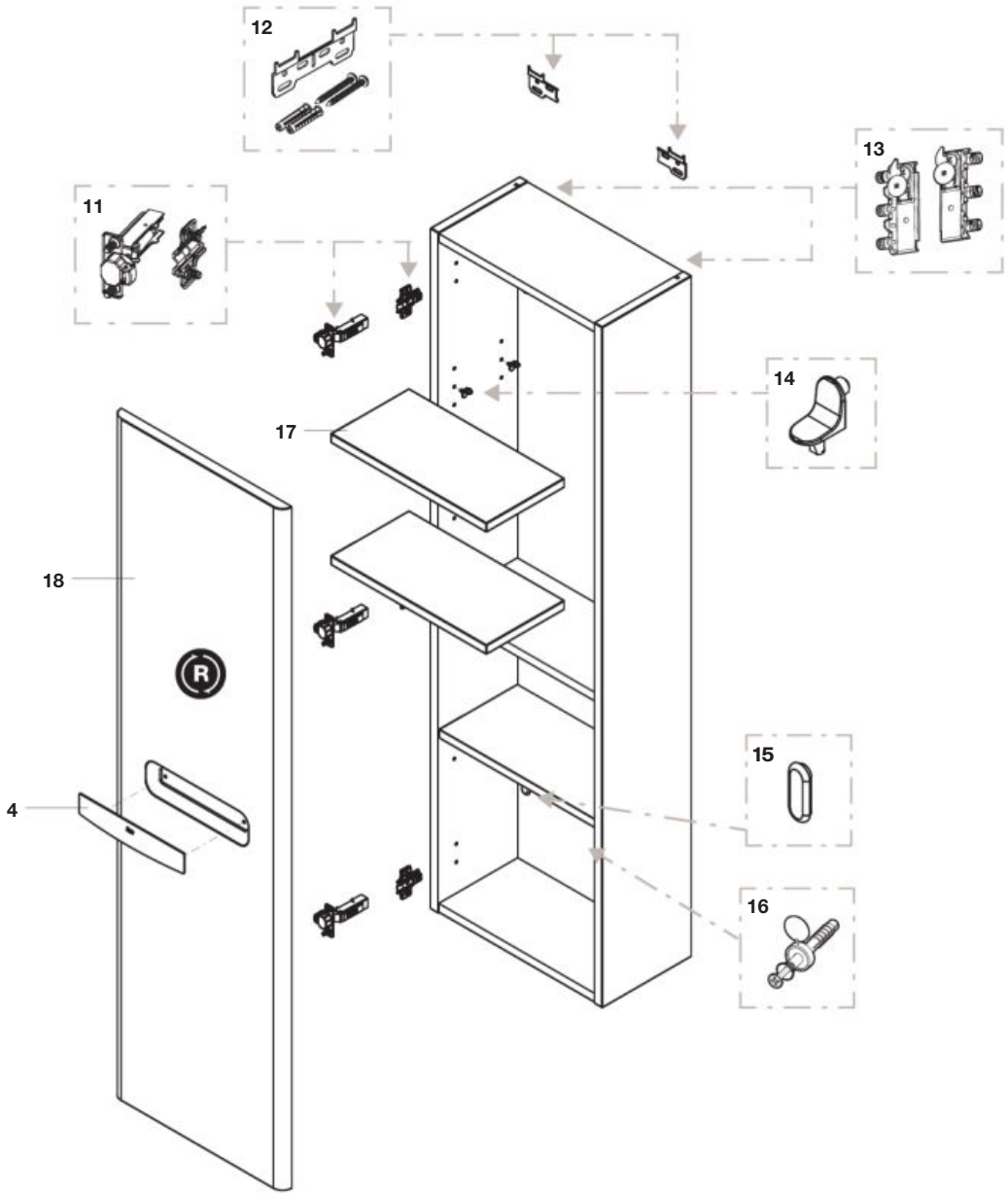

Las últimas posiciones de cada código indican el acabado (color):
The last positions indicates the finish (colour):

Producto Product	Recambio Spare part	Acabado Finished
806	**WH**	**Blanco brillo /** White Lacquered
385	**70**	**Uva mate /** Grape
150	**TK**	**Teka texturizado /** Mood Teka
153	**GA**	**Gris antracita /** Grey Anthracite

			€
4	2 un	**AU00302C0R**	44,50
11	2 un	**AU0089500R**	18,00
12 16		**AU0013800R**	12,10
13 15	+ 4 un	**AU0013700R**	16,30
14	8 un	**AU0020000R**	15,00
15	4 un	**AU0013700R**	16,30
17		**AU00308GMR**	18,80
18		**AU0030770R**	N.D.
		AU00307TKR	N.D.
		AU00307WHR	74,20

The Gap Original

RECAMBIOS PARA REFERENCIAS ANTERIORES A 2015 CON EL INTERIOR DE LOS CAJONES EN ACABADO METÁLICO (IMAGEN B).

PARA LAS NUEVAS REFERENCIAS THE GAP POSTERIORES A 2015 CON EL INTERIOR EN ACABADO GRIS TEXTURIZADO (IMAGEN A) VER EN LA PÁGINA 189.

SPARE PARTS FOR REFERENCES BEFORE 2015 WITH THE INSIDE IN METALLIC FINISHED (IMAGE B).

FOR REFERENCES AFTER 2015 WITH THE INSIDE OF THE DRAWERS WITH THE INSIDE IN GREY TEXTURED FINISHED (IMAGE A) SEE IN PAGE 189.

A

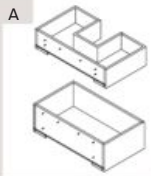

B

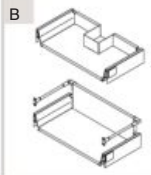

Mueble base de dos cajones
One door column

A855712...	Unik	800 mm
A856422...	Vanity Unit	800 mm

B

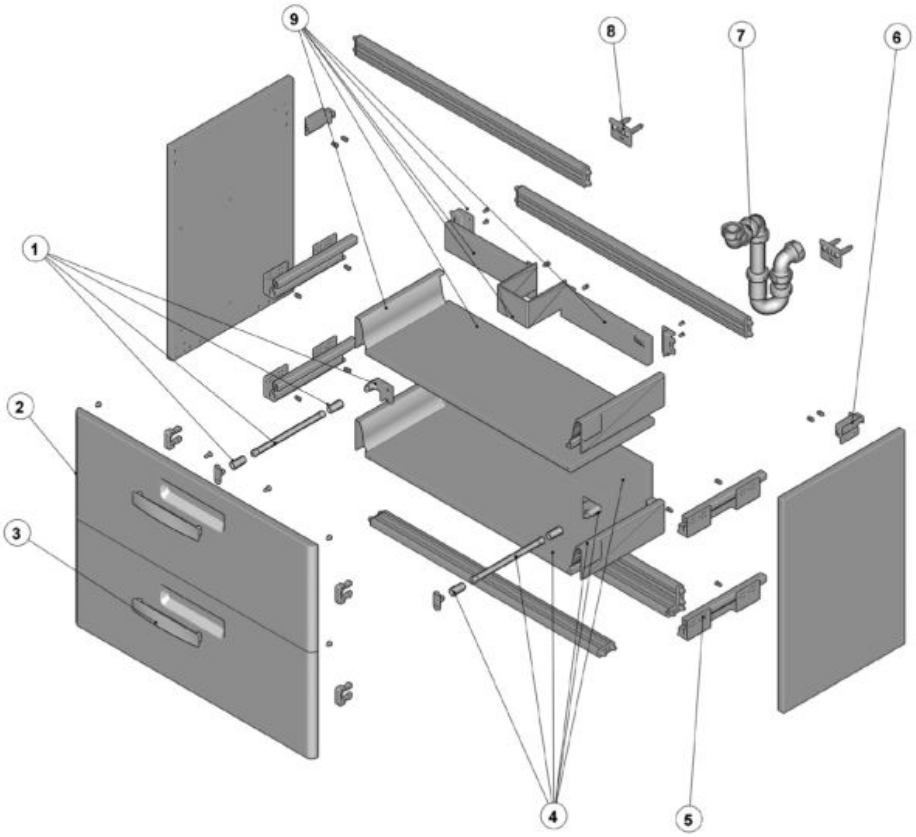

Las últimas posiciones de cada código indican el acabado (color):
The last positions indicates the finish (colour):
575 Beige
576 Blanco / White
577 Uva / Grape

			€
1		**A858C28000**	52,30
2		**A858C31575**	N.D.
		A858C31576	N.D.
		A858C31577	N.D.
3		**A858C25000**	N.D.
4		**A858C37000**	N.D.
5		**A858C27000**	78,80
6		**A858B64000**	52,30
7		**A858B48000**	52,30
8	2 un	**A858A25000**	28,30
9		**A858C34000**	N.D.

Mueble base de dos cajones / Two drawers vanity unit

A855711...	Unik	700 mm
A856421...	Vanity Unit	700 mm

B

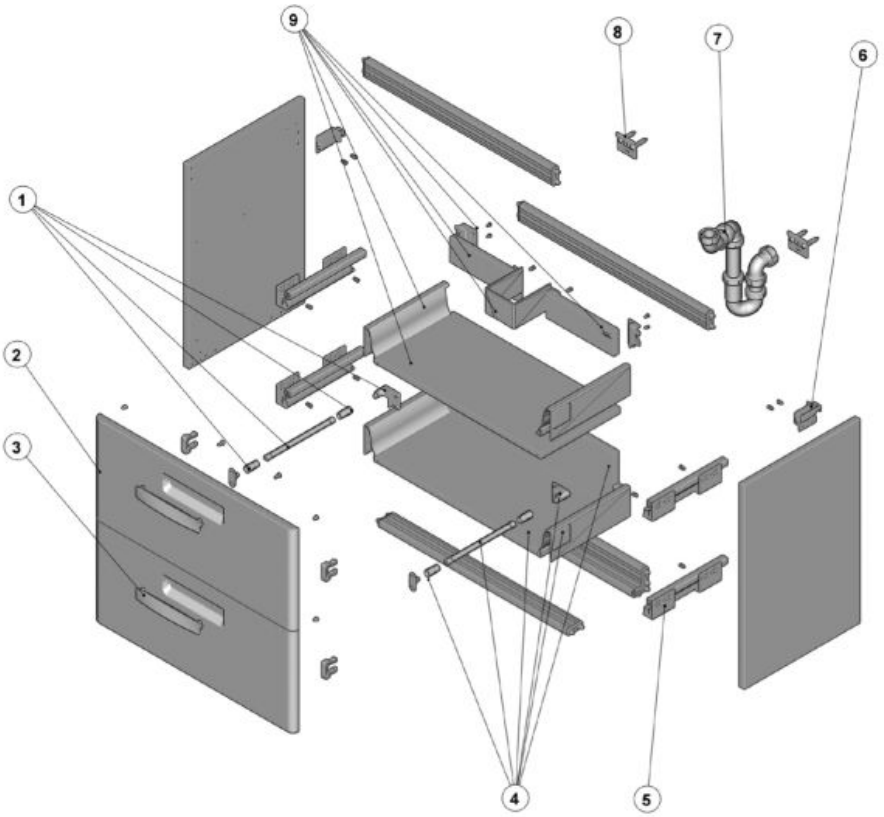

Las últimas posiciones de cada código indican el acabado (color):
The last positions indicates the finish (colour):
575 Beige
576 Blanco / White
577 Uva / Grape

			€
1		**A858C28000**	52,30
2		**A858C30575**	N.D.
		A858C30576	N.D.
		A858C30577	N.D.
3		**A858C25000**	N.D.
4		**A858C36000**	N.D.
5		**A858C27000**	78,80
6		**A858B64000**	52,30
7		**A858B48000**	52,30
8	2 un	**A858A25000**	28,30
9		**A858C33000**	N.D.

The Gap Original

RECAMBIOS PARA REFERENCIAS ANTERIORES A 2015 CON EL INTERIOR DE LOS CAJONES EN ACABADO METÁLICO (IMAGEN B).

PARA LAS NUEVAS REFERENCIAS THE GAP POSTERIORES A 2015 CON EL INTERIOR EN ACABADO GRIS TEXTURIZADO (IMAGEN A) VER EN LA PÁGINA 61.

SPARE PARTS FOR REFERENCES BEFORE 2015 WITH THE INSIDE IN METALLIC FINISHED (IMAGE B).

FOR REFERENCES AFTER 2015 WITH THE INSIDE OF THE DRAWERS WITH THE INSIDE IN GREY TEXTURED FINISHED (IMAGE A) SEE IN PAGE 61.

A

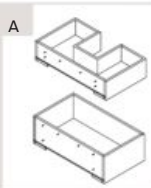

B

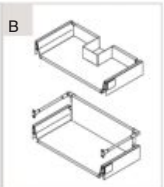

Mueble base de dos cajones
Two drawers vanity unit

A855710...	Unik	600 mm
A856420...	Vanity Unit	600 mm

B

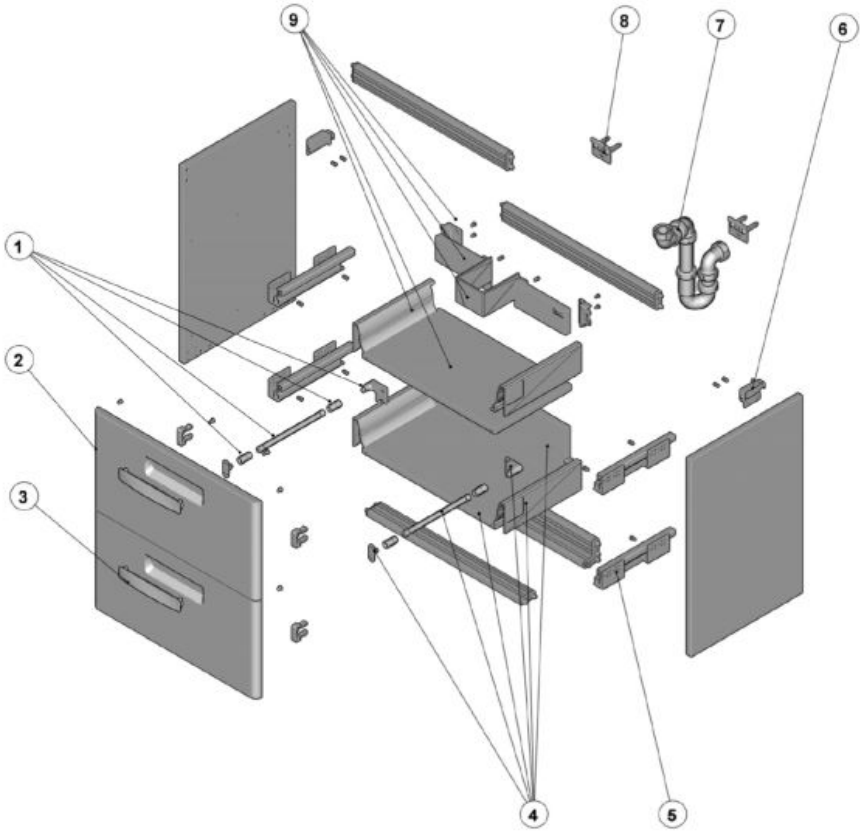

Las últimas posiciones de cada código indican el acabado (color):
The last positions indicates the finish (colour):
575 Beige
576 Blanco / White
577 Uva / Grape

			€
1		**A858C28000**	52,30
2		**A858C29575**	N.D.
		A858C29576	N.D.
		A858C29577	N.D.
3		**A858C25000**	N.D.
4		**A858C35000**	290,00
5		**A858C27000**	78,80
6		**A858B64000**	52,30
7		**A858B48000**	52,30
8	2 un	**A858A25000**	28,30
9		**A858C32000**	290,00

Mueble base de dos cajones / Two drawers vanity unit

A856526...	Unik	650 mm

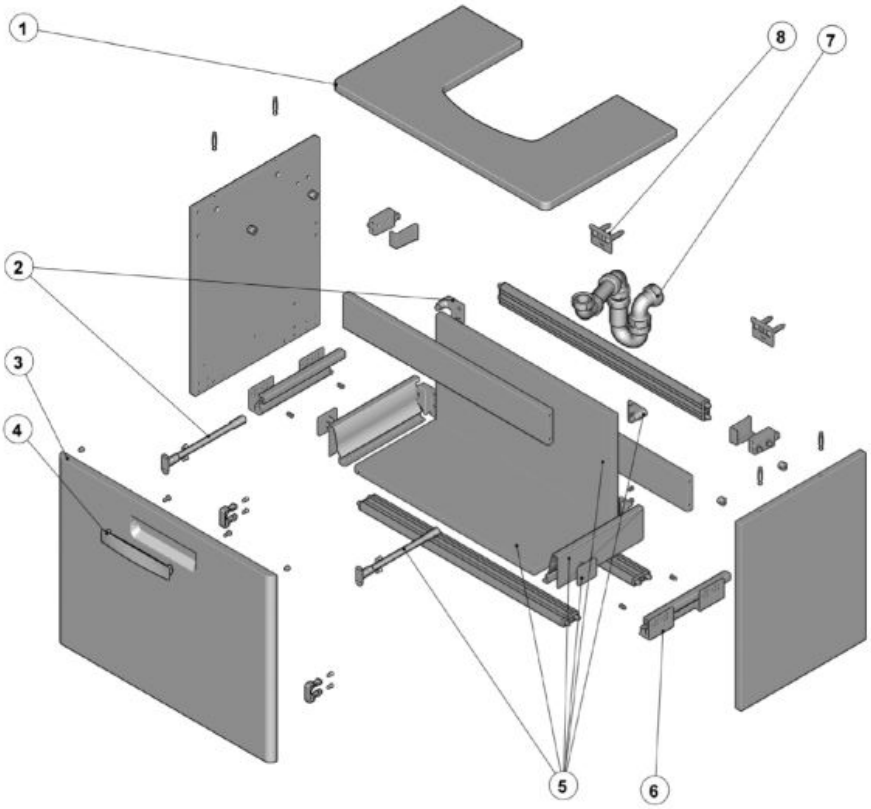

Las últimas posiciones de cada código indican el acabado (color):
The last positions indicates the finish (colour):
575 Beige
576 Blanco / White
577 Uva / Grape

			€
1		**A858C64575**	N.D.
		A858C64576	N.D.
		A858C64577	N.D.
2		**A858C28000**	52,30
3		**A858C42575**	N.D.
		A858C42576	N.D.
		A858C42577	N.D.
4		**A858C25000**	N.D.
5		**A858C47000**	N.D.
6		**A858C27000**	78,80
7		**A858B48000**	52,30
8	2 un	**A858A25000**	28,30

The Gap Original

Mueble base de un cajon / One drawer vanity unit

A856525...	Unik	600 mm

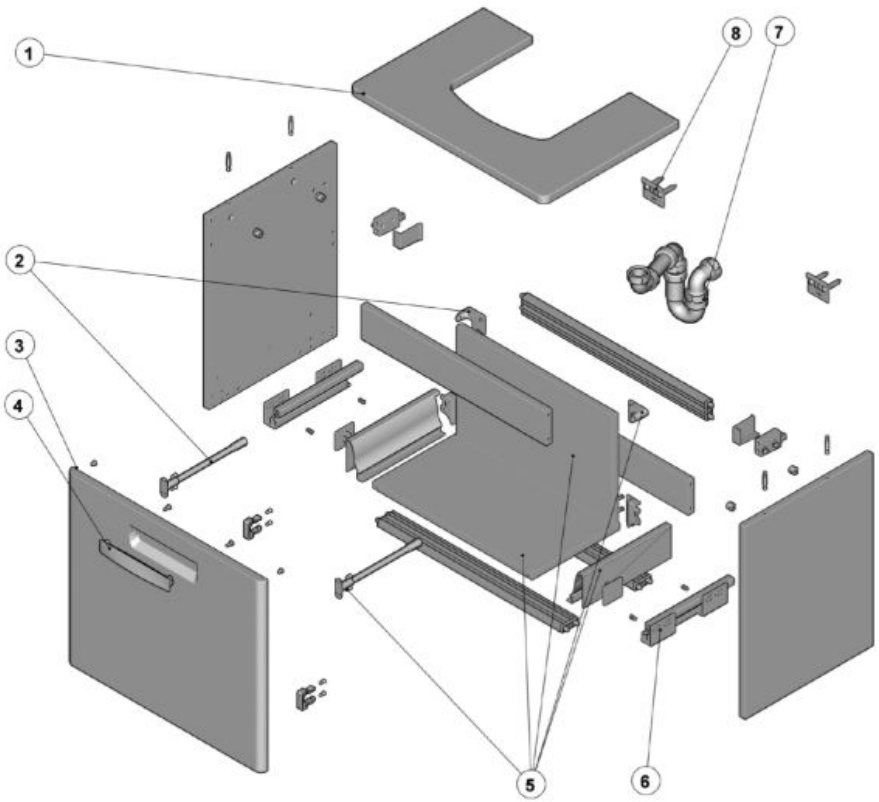

Las últimas posiciones de cada código indican el acabado (color):
The last positions indicates the finish (colour):
575 Beige
576 Blanco / White
577 Uva / Grape

			€
1		**A858C63575**	N.D.
		A858C63576	N.D.
		A858C63577	N.D.
2		**A858C28000**	52,30
3		**A858C41575**	N.D.
		A858C41576	N.D.
		A858C41577	N.D.
4		**A858C25000**	N.D.
5		**A858C46000**	N.D.
6		**A858C27000**	78,80
7		**A858B48000**	52,30
8	2 un	**A858A25000**	28,30

Mueble base de un cajon / One drawer vanity unit

A856524...	Unik	550 mm

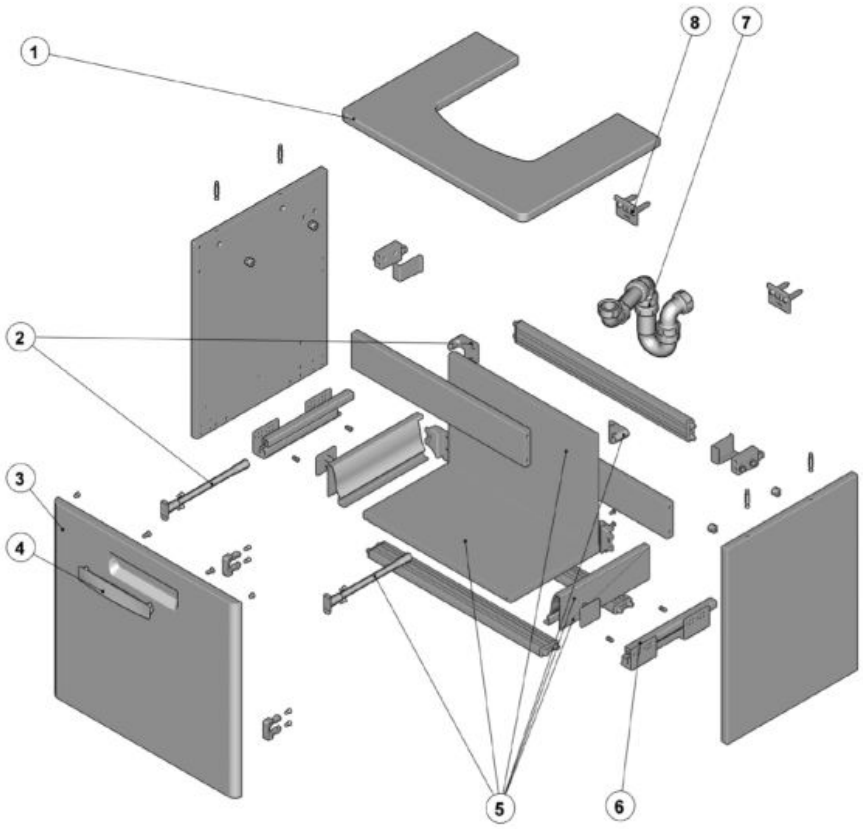

Las últimas posiciones de cada código indican el acabado (color):
The last positions indicates the finish (colour):
575 Beige
576 Blanco / White
577 Uva / Grape

			€
1		**A858C62575**	N.D.
		A858C62576	N.D.
		A858C62577	N.D.
2		**A858A28000**	N.D.
3		**A858C40575**	N.D.
		A858C40576	N.D.
		A858C40577	N.D.
4		**A858C25000**	N.D.
5		**A858C45000**	N.D.
6		**A858C27000**	78,80
7		**A858B48000**	52,30
8	2 un	**A858A25000**	28,30

The Gap

Lavabos mural / Wall-hung washbasin

A3270MA000

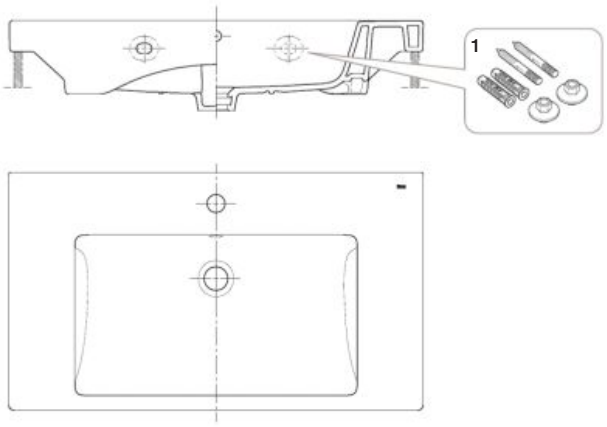

A3270ME000
A3270MB000
A3270MU000

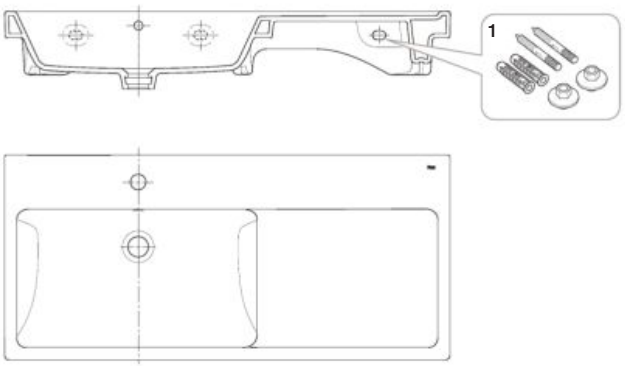

A3270M0000
A3270M1000

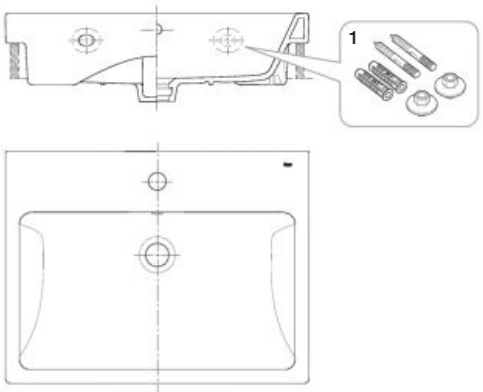

		€
1	**AV0007500R**	5,51

The Gap

Taza tanque bajo Rimless y salida dual
Close-coupled WC pan rimless and dual outlet

A3420N8..0	Round
A342479..0	Square

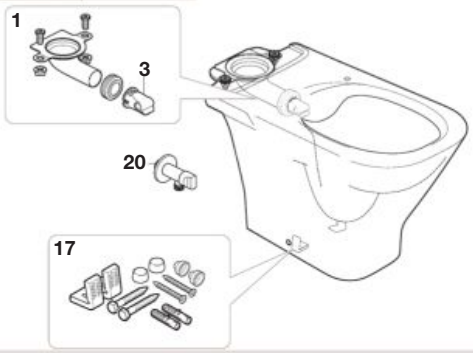

Admite / Admits

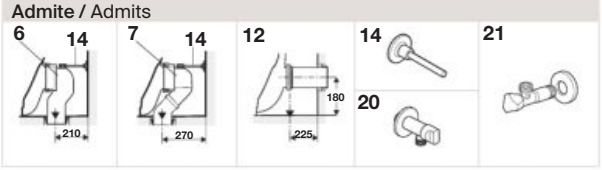

Taza tanque bajo salida horizontal/vertical
Close-couple WC pan Horizontal/Vertical outlet

A342477..0	Square
A342478..0	Square

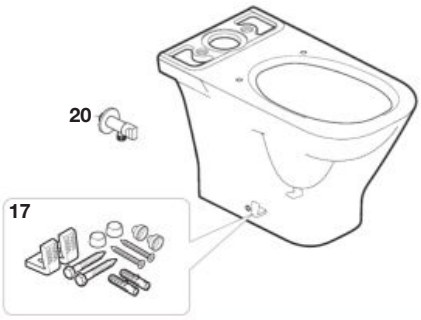

Admite / Admits

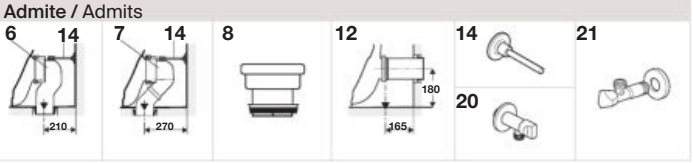

Taza tanque bajo compacto, rimless y salida dual
Close-coupled back-to-wall WC pan, rimless and dual outlet

A3420N7..0	Round
A342737..H	Square

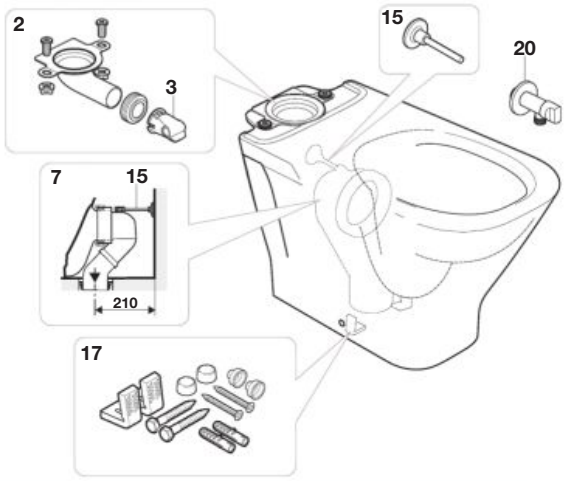

Admite / Admits

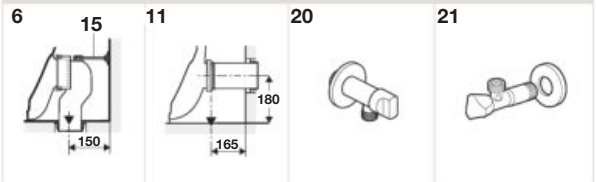

Taza tanque bajo compacto con salida dual
Close-coupled back-to-wall WC pan with dual outlet

A342472..0	Square

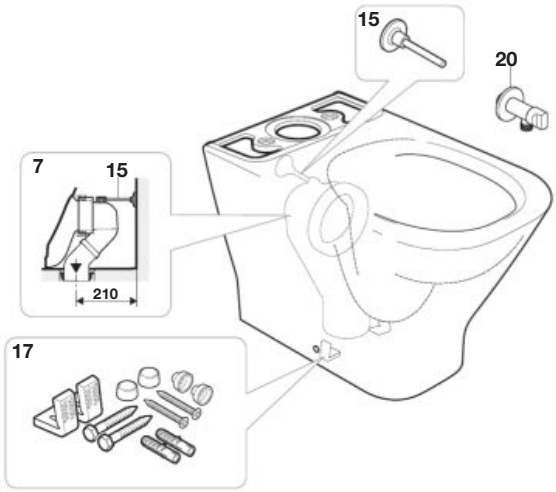

Admite / Admits

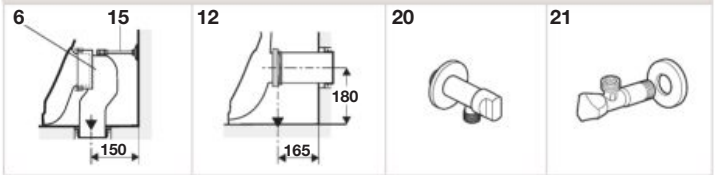

		€
1	**AV0037000R**	15,80
2	**AV0037500R**	15,60
3	**AV0027000R**	3,77
7	**AV0007700R**	14,60
15	**AV0013100R**	3,46
17	**AV0009400R**	6,16

Admite (no incluido)
Admits (not included)

			€
6	**AV0007900R**		14,60
7	**AV0007700R**		14,60
8	**AV0007800R**		8,11
11	**AV0012400R**		34,80
12	**A890805400**		33,70
14	**AV0035400R**		4,80
20	**AG0141300R**	Cerámico / Ceramic	12,00
21	**AG0078200R**	Latón / Brass	30,90

The Gap

Taza confort tanque bajo, compacto salida dual
Comfort height close-coupled WC pan, compact dual outlet

A34247C..U	Square

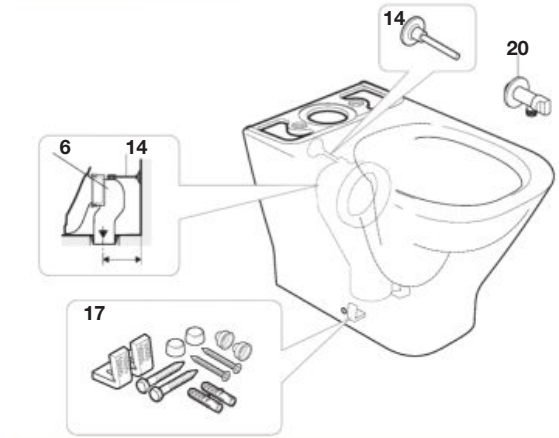

Admite (no incluido) / Admits (not included)

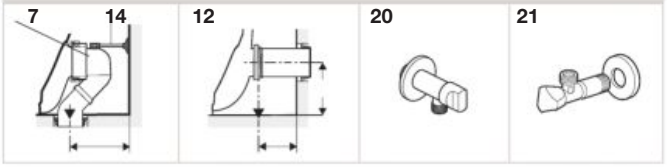

Taza suspendida rimless fijaciones ocultas
Rimless Wall-hung WC pan hidden fixation

A3460NL..0	Round
A34647L..0	Square

A3460NB..0	Round Compact
A34647A..0	Square Compact

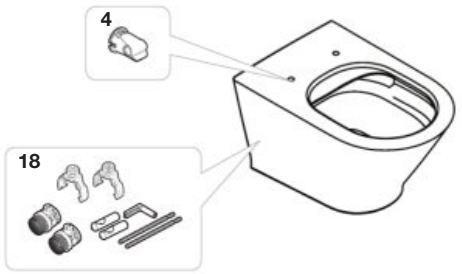

Admite (no incluido) /
Admits (not included)

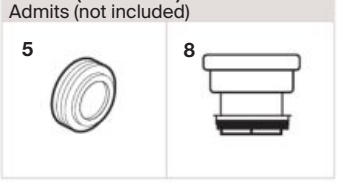

Taza suspendida Wall-hung WC pan

A346477..0	Square

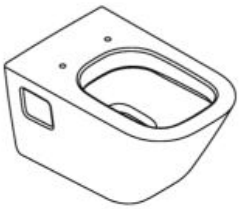

Admite (no incluido) /
Admits (not included)

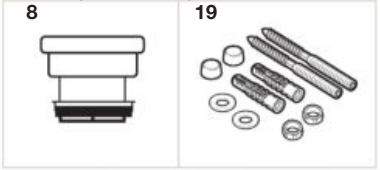

Taza tanque alto compacto, rimless y salida dual
High cistern back-to-wall WC pan, rimless and dual outlet

A3470N7..0	Round
A347737..0	Square

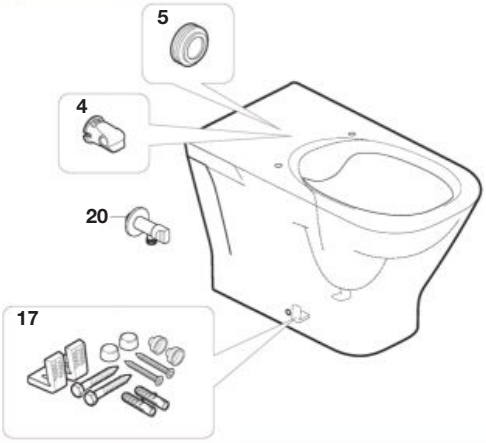

Admite (no incluido) / Admits (not included)

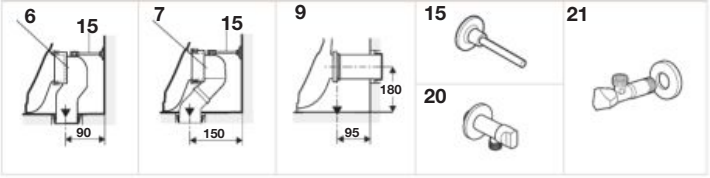

		€
4	**AV0034100R**	3,58
5	**AV0016200R**	2,63
6	**AV0007900R**	14,60
14	**AV0035400R**	4,80
17	**AV0009400R**	6,16
18	**AV0044000R**	41,70

Admite (no incluido)
Admits (not included)

		€
5	**AV0016200R**	2,63
6	**AV0007900R**	14,60
7	**AV0007700R**	14,60
8	**AV0007800R**	8,11
9	**AV0009300R**	42,70

Admite (no incluido)
Admits (not included)

			€
12	**A890805400**		33,70
15	**AV0013100R**		3,46
19	**AV0013500R**		14,40
20	**AG0141300R**	Cerámico / Ceramic	12,00
21	**AG0078200R**	Latón / Brass	30,90

The Gap

Taza tanque alto comfort
High cistern WC pan Comfort

A347479..0	Square
A3470N8..0	Round

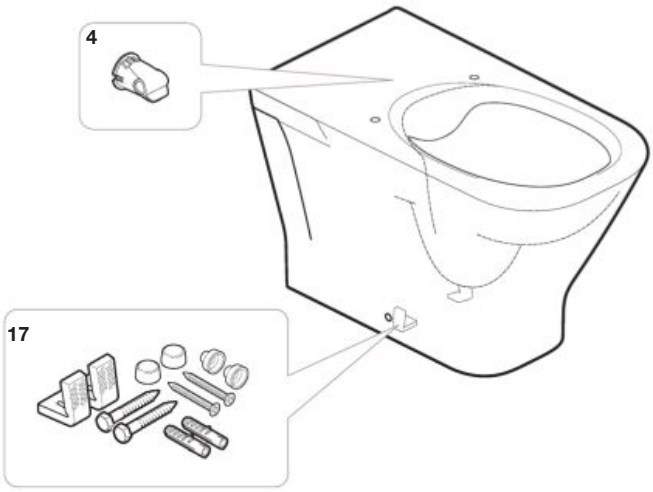

			€
4	**AV0034100R**		3,58
6	**AV0007900R**		14,60
7	**AV0007700R**		14,60
9	**AV0009300R**		42,70
15	**AV0013100R**		3,46
17	**AV0009400R**		6,16
20	**AG0141300R**	Cerámico/ Ceramic	12,00
21	**AG0078200R**	Pomo latón/ Brass knob	30,90

ADMITE / *Admits*

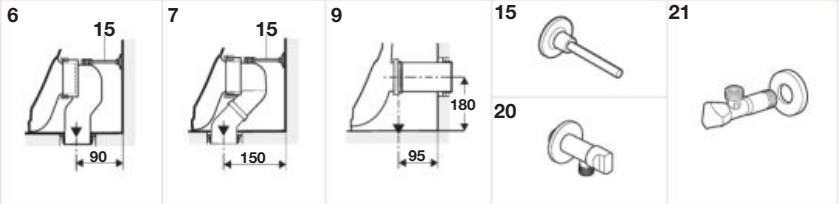

Taza tanque bajo compacto rimless
Close-coupled back-to-wall WC pan rimless

A34273A..0	Square

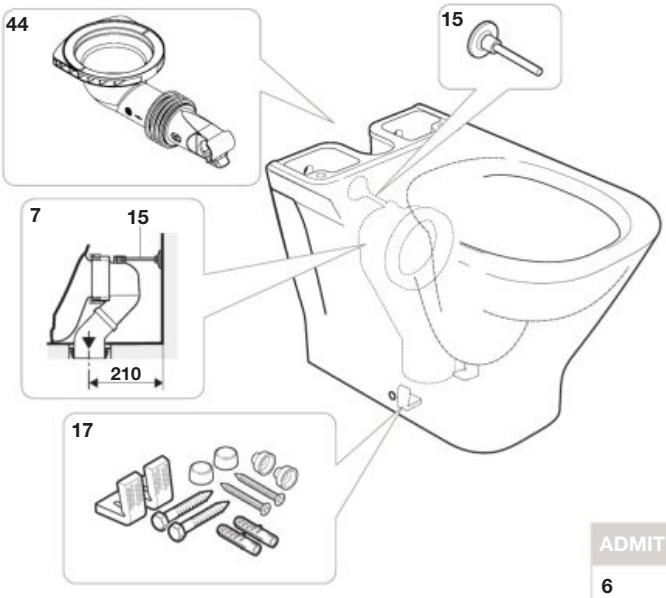

		€
6	**AV0007900R**	14,60
7	**AV0007700R**	14,60
11	**AV0012400R**	34,80
15	**AV0013100R**	3,46
17	**AV0009400R**	6,16
44	**AV0065600R**	7,35

ADMITE / *Admits*

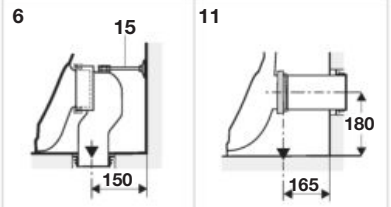

The Gap

Taza tanque alto compacto salida dual
High cistern back-to-wall WC pan Dual outlet

A347477..0	Square

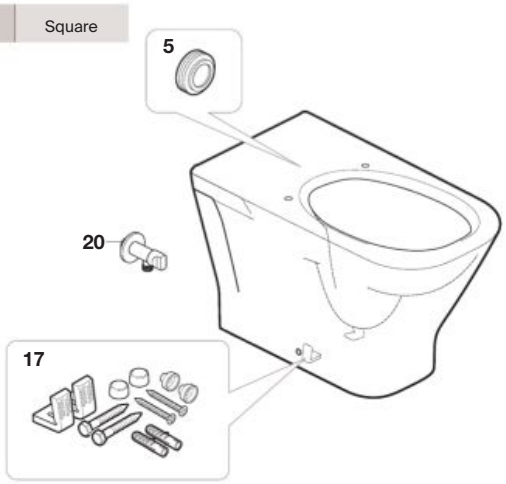

Admite (no incluido) / Admits (not included)

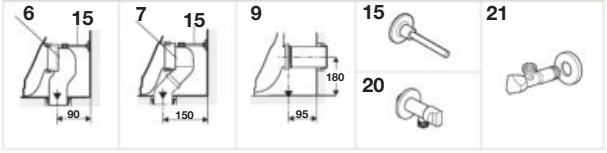

Bidé con fijaciones
Bidet with Fixing Kit

A357474..0	Square

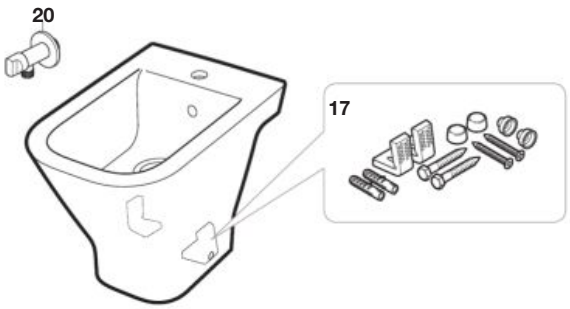

Admite (no incluido) / Admits (not included)

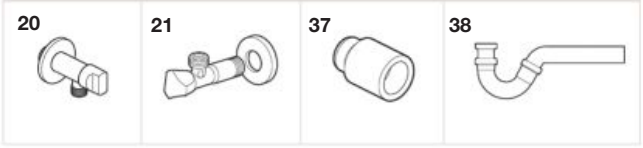

Bidé adosado a pared con fijaciones
Back-to-wall Bidet with Fixing Kit

A3570N7..0	Round
A357477..0	Square
A35747C..0	Square Confort

A3570N9..0	Round

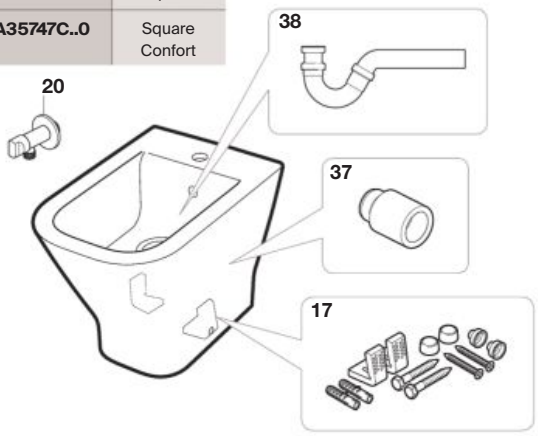

Admite (no incluido) / Admits (not included)



Bidé suspendido con fijaciones ocultas
Wall-hung Bidet with hidden Fixing Kit

A357476..0	Square
A3570N6..0	Round

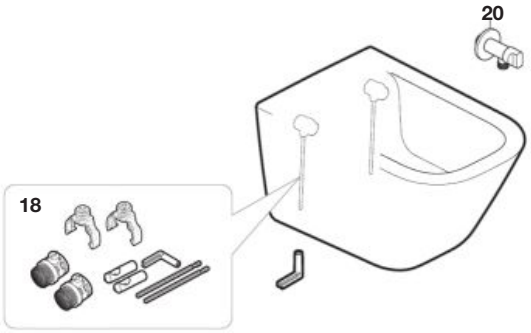

Admite (no incluido) / Admits (not included)

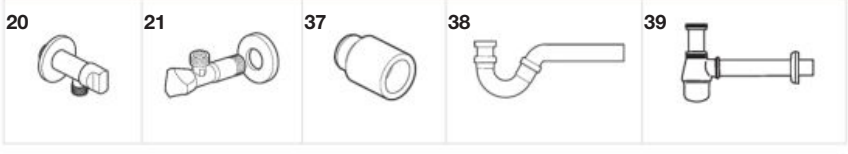

		€
5	**AV0016200R**	2,63
17	**AV0009400R**	6,16
18	**AV0034800R**	70,80
37	**AV0013400R**	6,03
38	**AV0051800R**	37,10

Admite (no incluido)
Admits (not included)

			€
6	**AV0007900R**		14,60
7	**AV0007700R**		14,60
9	**AV0009300R**		42,70
15	**AV0013100R**		3,46
20	**AG0141300R**	Cerámico / Ceramic	12,00
21	**AG0078200R**	Latón / Brass	30,90

Admite (no incluido)
Admits (not included)

		€
37	**AV0013400R**	
38	**AV0051800R**	37,10
39	**A506401814**	27,50

The Gap

Bidé con fijaciones
Bidet with Fixing Kit

A3570N4..0 Round

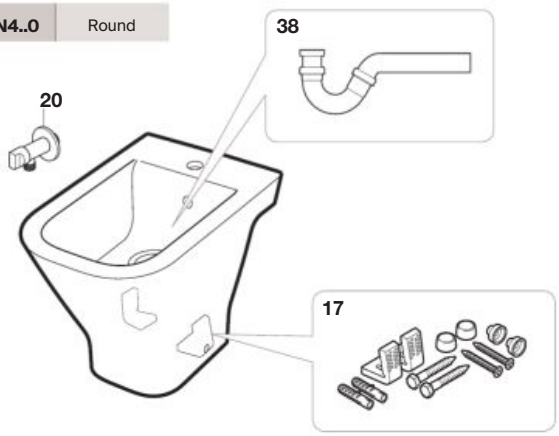

Admite (no incluido) / Admits (not included)

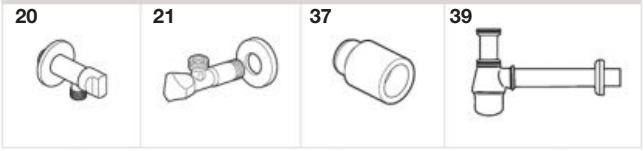

Tanque alimentación lateral
Cistern side inlet

A341471..0 Square

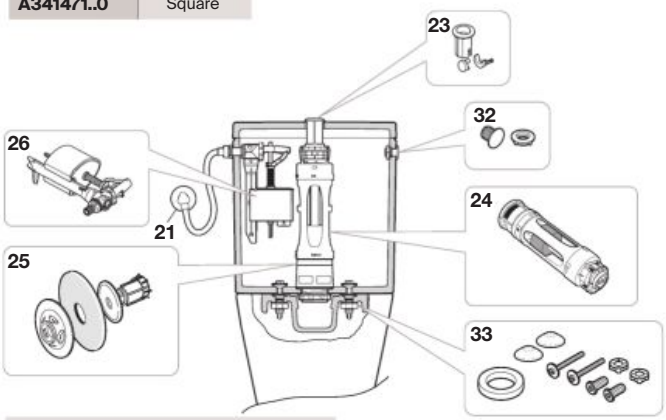

Admite (no incluido) /
Admits (not included)

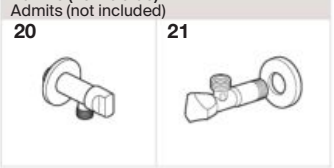

Tanque rimless alimentación lateral/inferior
Rimless Cistern side/bottom inlet

A341731..0 Square

A341730..0 Square inferior

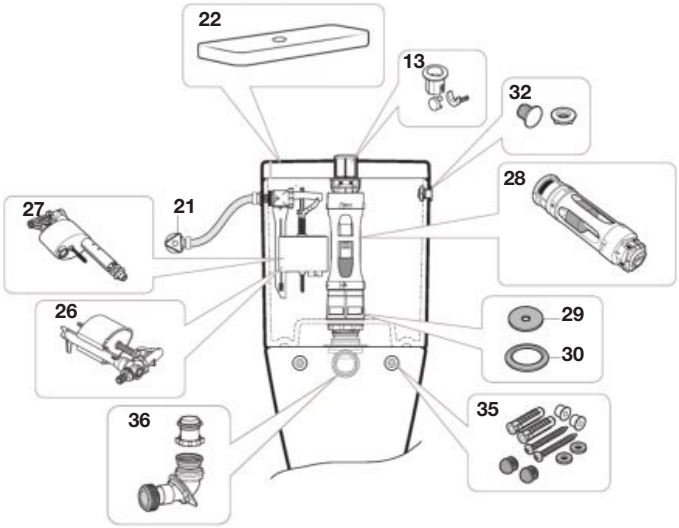

Admite (no incluido) /
Admits (not included)



		€
13	**AH0001800R**	13,30
17	**AV0009400R**	6,16
22	**AV0015300R**	22,70
23	**AH0001700R**	14,00
24	**AH0000100R**	35,10
25	**AH0007100R**	2,74
28	**AH0003000R**	19,60
29	**AH0007100R**	2,74

			€
30	**AH0007200R**		1,72
32	**AV0012600R**	Lateral	2,54
33	**AV0028800R**		17,30
35	**AV0014700R**		8,61
36	**AV0014900R**		49,10
38	**AV0051800R**		37,10
40	**AV0036000R**	Round	10,20

Tanque alimentación lateral/inferior
Cistern side/bottom inlet

A3410N1..0 Round

A341470..0 Square

A3410N0..0 Round Inferior

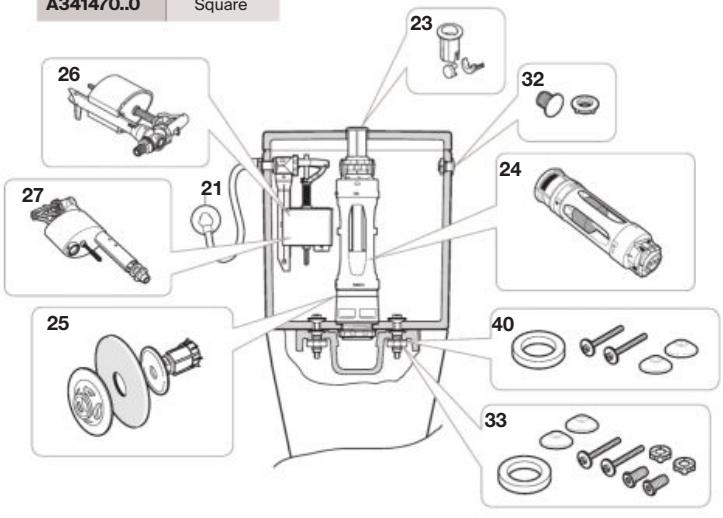

Admite (no incluido) /
Admits (not included)



Admite (no incluido)
Admits (not included)

			€
20	**AG0141300R**	Cerámico / Ceramic	12,00
21	**AG0078200R**	Latón / Brass	30,90
37	**AV0013400R**		6,03
39	**A506401814**		27,50

Producto acabado compatible:
Finish product compatible:

			€
26	**A822508800**	Lateral	-
27	**A822508900**	Inferior	-

The Gap

Tanque bajo adosado doble descarga 4,5/3L
Back-to-wall Low Cistern dual flush 4,5/3L

A341471..0	Square

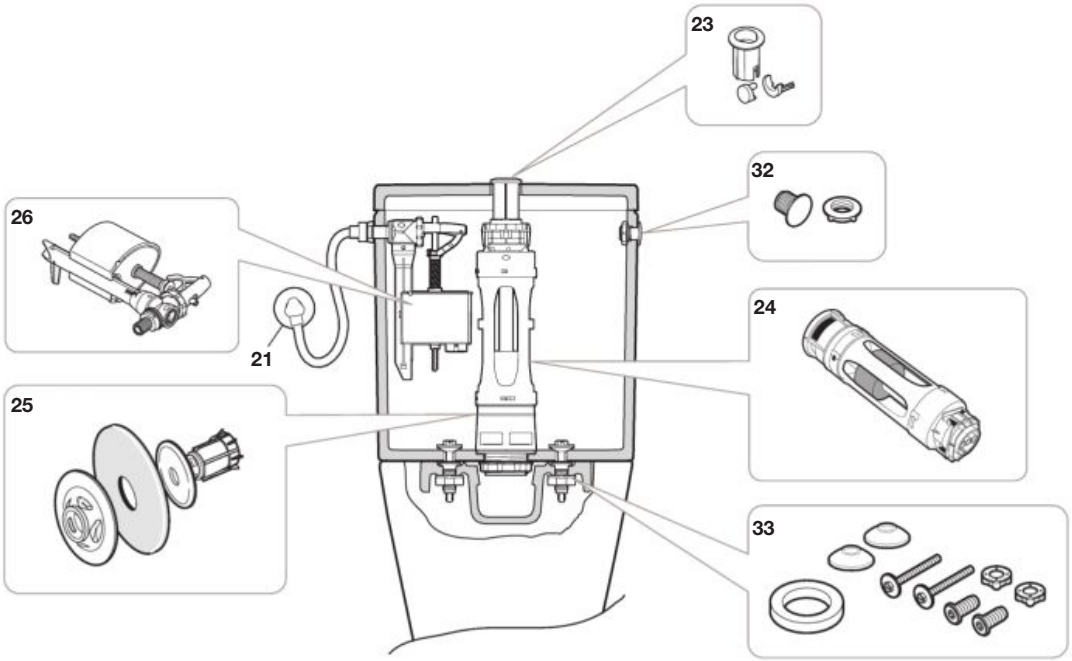

Admite / Admits

20



21

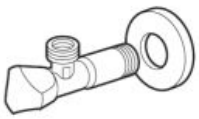

			€
20	**AG0141300R**	Cerámico / Ceramic	12,00
21	**AG0078200R**	Pomo latón / Brass knob	30,90
25	**AH0007100R**		2,74
23	**AH0001700R**		14,00
24	**AH0000100R**		35,10
32	**AV0012600R**		2,54
33	**AV0028800R**		17,30

Producto acabado compatible:
Finish product compatible:

		€
26	**A822508800**	-

The Gap

Porcelana The Gap D-Trit / WC The Gap D-Trit

PACK THE GAP D-TRIT The Gap D-Trit pack
A34T0N2000

PORCELANA THE GAP D-TRIT: The Gap D-Trit WC	
A3410NG000	Cisterna / Cistern
A3420N9000	Taza / Bowl

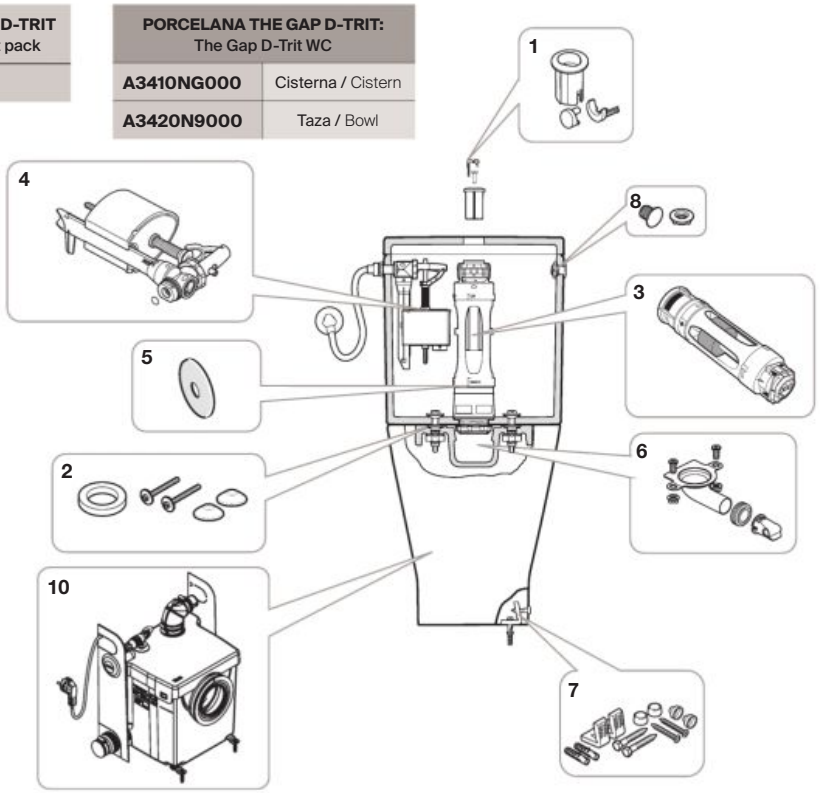

D-Trit

PACK THE GAP D-TRIT The Gap D-Trit pack
A34T0N2000

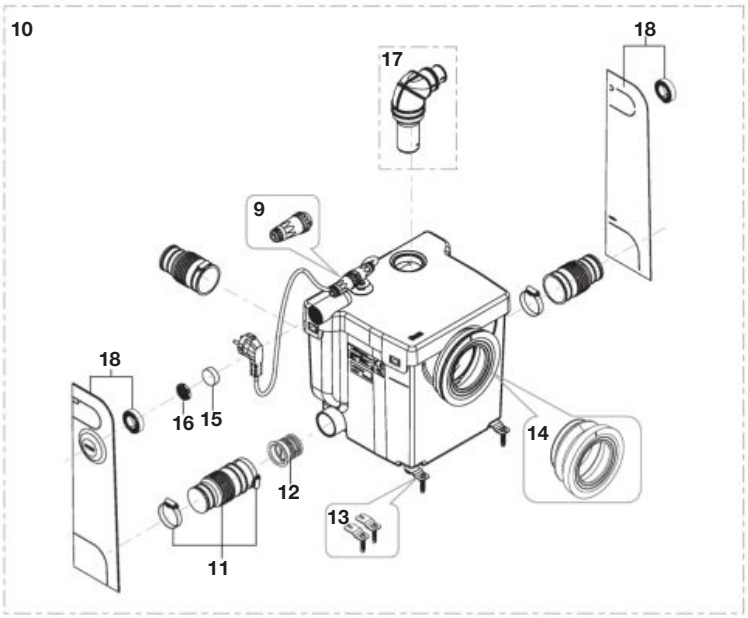

		€
1	**AH0001700R**	14,00
2	**AV0036000R**	10,20
5	**AH0007100R**	2,74
6	**AV0037000R**	15,80
7	**AV0009400R**	6,16
8	**AV0012600R**	2,54
9	**AT0018800R**	6,63
11	**AV0058500R**	20,30

		€
12	**AV0058600R**	6,76
13	**AV0058700R**	3,33
14	**AV0058800R**	20,30
15	**AV0058900R**	3,33
16	**AV0059000R**	3,33
17	**AV0059100R**	20,30
18	**AV0059200R**	33,60

Producto acabado compatible:
Finish product compatible:

		€
3	**A822024000**	-
4	**A822508800**	-
10	**A818006000**	-

Debba

Mueble base de dos puertas con lavabo / Two doors vanity unit with washbasin

UNIK DEBBA STANDARD: CONJUNTO MUEBLE DE 2 PUERTAS Y LAVABO **Vanity unit 2 doors + basin**	
A855964...	1000 mm
A855962...	800 mm
A855961...	700 mm
A855960...	600 mm

PACK DEBBA STANDARD: UNIK + ESPEJO+ APLIQUE LED **Unik +mirror + LED light**	
A855982...	1000 mm
A855980...	800 mm
A855979...	700 mm
A855978...	600 mm

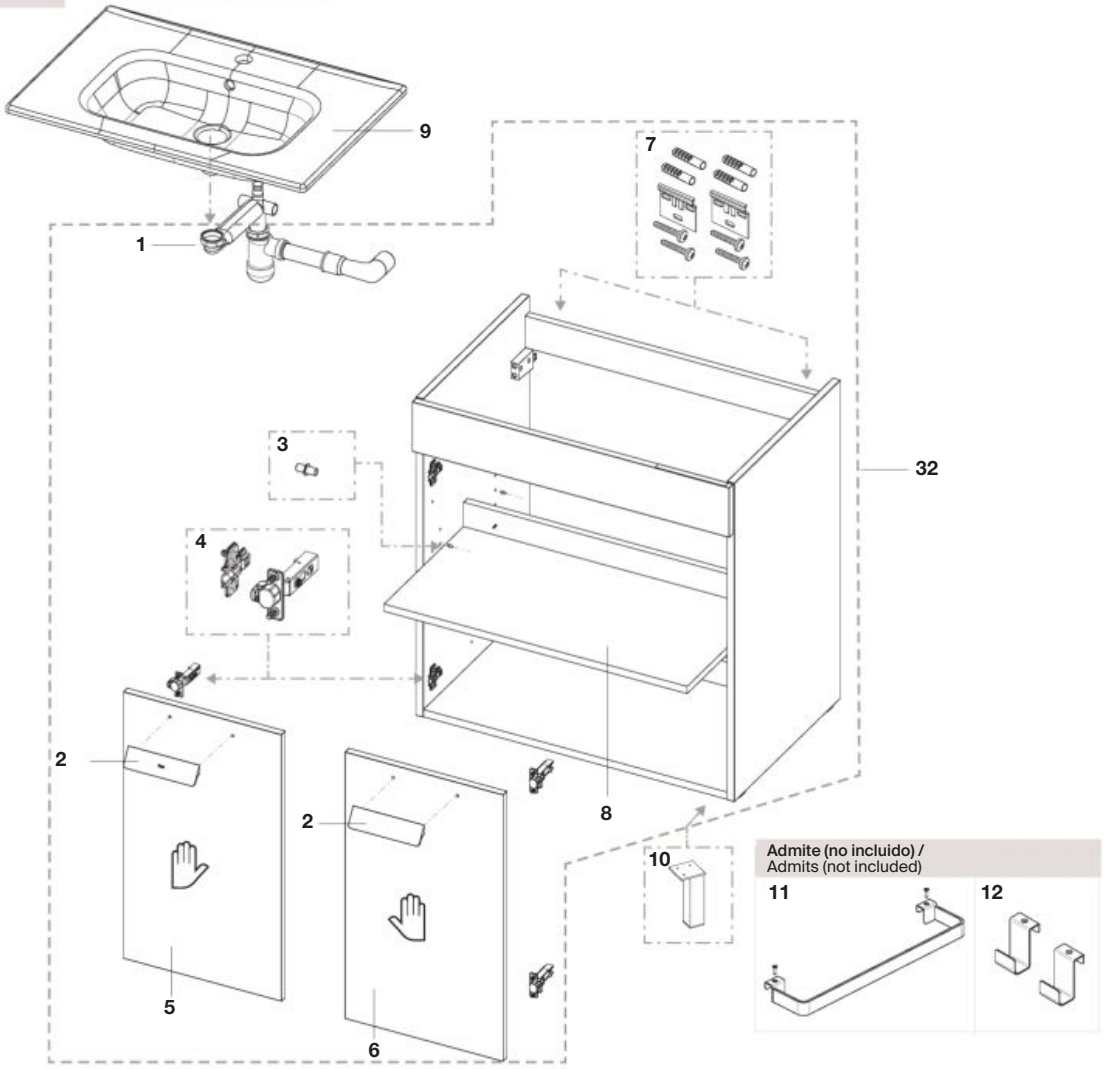

Las últimas posiciones de cada código indican el acabado (color):
The last positions indicates the finish (colour):

Producto Product	Recambio Spare part	Acabado Finished
806	**WH**	Blanco brillo / White Lacquered
154	**WE**	Wengé
155	**OA**	Roble / Urban Oak
153	**GA**	Gris antracita / Grey Anthracite

Sólo se muestra el precio del acabado Blanco /
Only the price of the White finish is shown

				€
1		**AU0014100R**		44,90
2		**AU00140C0R**	150 mm	45,80
		AU0023000R	210 mm	29,20
3	4 un	**AU0013900R**		8,63
4	2 un	**AU0089500R**		18,00
5		**AU00145..R**	600 mm	42,50
		AU00148..R	700 mm	51,30
		AU00151..R	800 mm	N.D.
		AU00206..R	1000 mm	N.D.

			€
6	**AU00146..R**	600 mm	42,50
	AU00149..R	700 mm	N.D.
	AU00152..R	800 mm	56,70
	AU00207..R	1000 mm	N.D.
7	**AU0013300R**		15,80
8	**AU00202..R**	600 mm	N.D.
	AU00203..R	700 mm	N.D.
	AU00204..R	800 mm	N.D.
	AU00205..R	1000 mm	N.D.

Producto acabado compatible:
Finish product compatible:

			€
9	**A32799E000**	600 mm	-
	A32799D000	700 mm	-
	A32799C000	800 mm	-
	A32799B000	1000 mm	-
10	**A816757339**		-
11	**A816760001**		-
12	**A816761001**		-
32	**A856820...**	600 mm	-
	A856821...	700 mm	-
	A856822...	800 mm	-
	A856824...	1000 mm	-

Debba

Mueble base de cuatro puertas con lavabo doble / Four doors vanity unit with double washbasin

UNIK DEBBA STANDARD: CONJUNTO 2 MUEBLES DE 2 PUERTAS Y LAVABO Vanity unit 2 doors + basin	
A855965...	1200 mm

PACK DEBBA STANDARD: UNIK + ESPEJO+ APLIQUE LED Unik +mirror + LED light	
A855983...	1200 mm

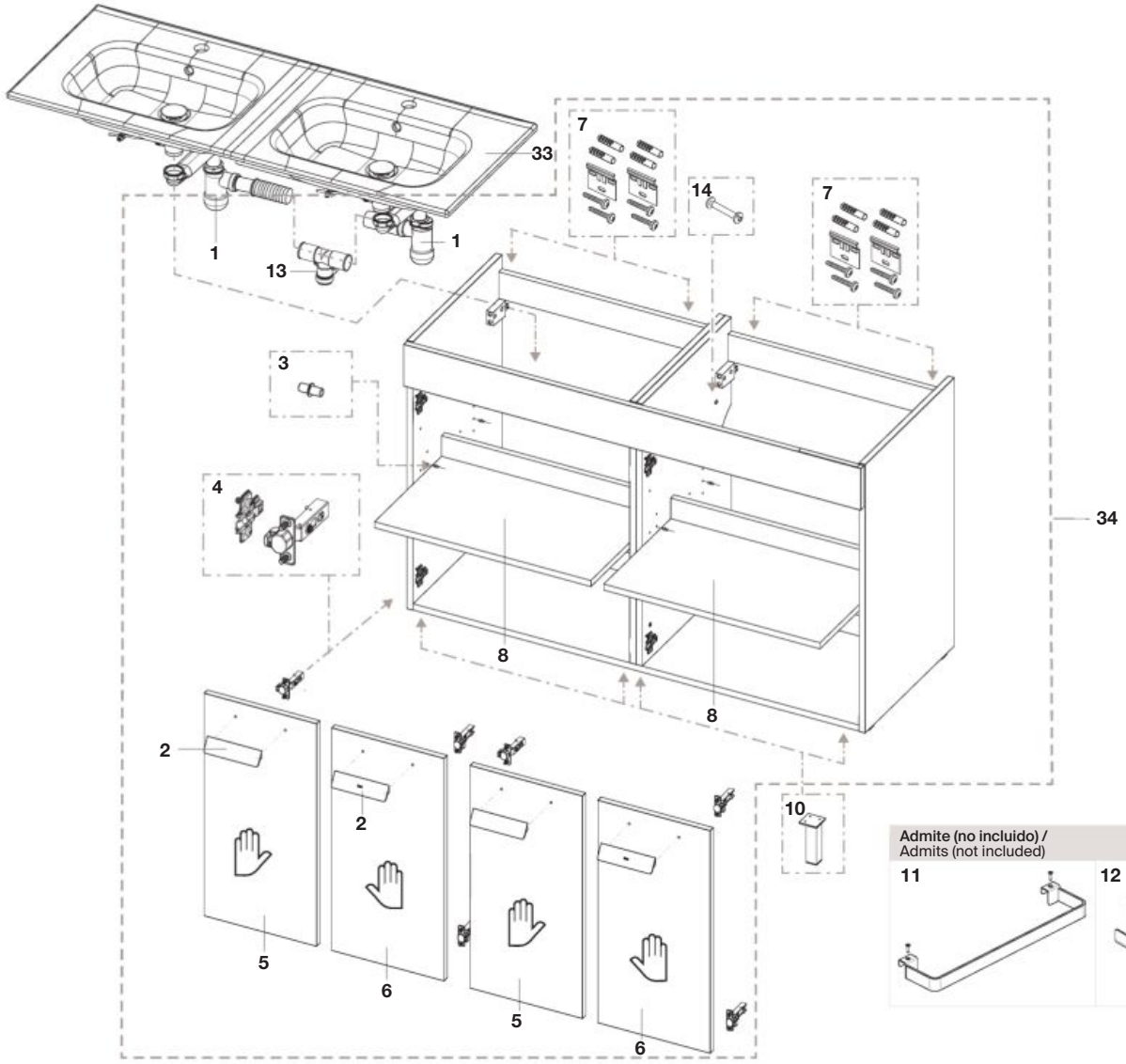

Admite (no incluido) /
Admits (not included)

Las últimas posiciones de cada código indican el acabado (color):
The last positions indicates the finish (colour):

Producto Product	Recambio Spare part	Acabado Finished
806	**WH**	**Blanco brillo /** White Lacquered
154	**WE**	**Wengé**
155	**OA**	**Roble /** Urban Oak
153	**GA**	**Gris antracita /** Grey Anthracite

				€
1		**AU0014100R**		44,90
2		**AU00140C0R**	150 mm	45,80
3	4 un	**AU0013900R**		8,63
4	2 un	**AU0089500R**		18,00
5		**AU00145WHR**		42,50
		AU00145WER		N.D.
		AU00145OAR		N.D.
		AU00145GAR		42,50

				€
6		**AU00146WHR**		42,50
		AU00146WER		N.D.
		AU00146OAR		N.D.
		AU00146GAR		N.D.
7		**AU0013300R**		15,80
8		**AU00202WHR**		N.D.
		AU00202WER		N.D.
		AU00202OAR		N.D.
		AU00202GAR		N.D.
13		**AU0020800R**		7,68
14	5 un	**AU0020900R**		14,80

Producto acabado compatible:
Finished product compatible:

				€
10	2 un	**A816757339**		-
11		**A816760001**		-
12		**A816761001**		-
33		**A32799A000**	1200 mm	-
34		**A856825...**	1200 mm	-
1	2 un			-

Debba

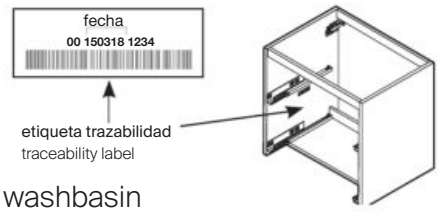

Mueble base de dos cajones con lavabo / Two drawers vanity unit with washbasin

UNIK DEBBA STANDARD: CONJUNTO MUEBLE DE 2 CAJONES Y LAVABO Kit two drawers unit and basin	
A855970...	1000 mm
A855968...	800 mm
A855967...	700 mm
A855966...	600 mm

PACK DEBBA STANDARD: UNIK + ESPEJO+ APLIQUE LED Unik + mirror + led light	
A855988...	1000 mm
A855986...	800 mm
A855985...	700 mm
A855984...	600 mm

Atención: Para sustituir los cajones antiguos (versión A) por uno nuevo (versión B), será necesario cambiar también las guías (15B) y los enganches (19B) del cajón.
Warning: To replace the old drawers (version A) with a new one (version B), you must change the guides (15) and drawer catches (19).

Versión A	antes fecha de trazabilidad 150318 / traceability date before 150318
Versión B	después fecha de trazabilidad 150318 / traceability date after 150318

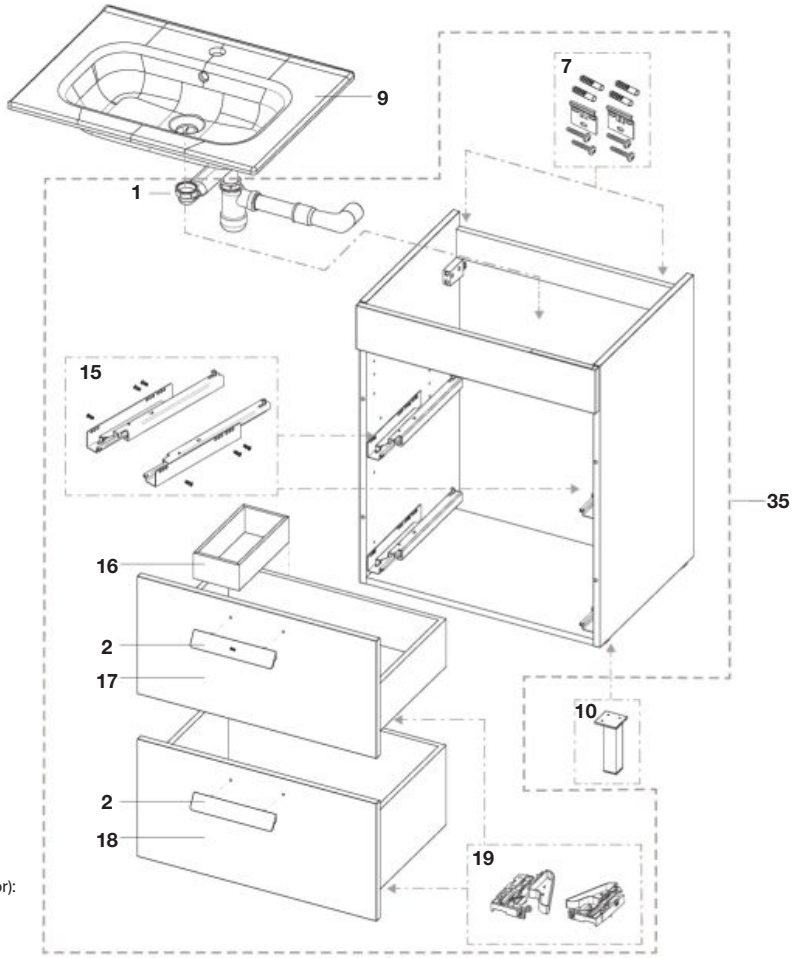

Admite (no incluido) /
Admits (not included)

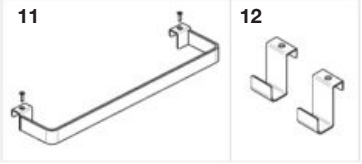

* Hasta fin de existencias
* Until end of stock

Las últimas posiciones de cada código indican el acabado (color):
The last positions indicates the finish (colour):

Producto Product	Recambio Spare part	Acabado Finished
806	**WH**	Blanco brillo / White Lacquered
154	**WE**	Wengé
155	**OA**	Roble / Urban Oak
153	**GA**	Gris antracita / Grey Anthracite

				€
1		**AU0014100R**		44,90
2	2 un	**AU0023000R**	210 mm	29,20
7		**AU0013300R**		15,80
15		**AU0021300R**	Versión A*	48,50
		AU0017600R	Versión B	54,30
16		**AU0021200R**		22,80
17		**AU00210..R**	600 mm A*	54,30
		AU00215..R	700 mm A*	59,70
		AU00217..R	800 mm A*	66,30
		AU00219..R	1000 mm A*	75,80
		AU00742..R	600 mm B	57,50
		AU00743..R	700 mm B	65,80
		AU00744..R	800 mm B	66,00
		AU00745..R	1000 mm B	75,30

			€
18	**AU00211..R**	600 mm A*	48,30
	AU00216..R	700 mm A*	67,70
	AU00218..R	800 mm A*	74,20
	AU00220..R	1000 mm A*	84,00
	AU00746..R	600 mm B	60,00
	AU00747..R	700 mm B	65,80
	AU00748..R	800 mm B	68,00
	AU00749..R	1000 mm B	77,30
19	**AU0017300R**	Versión A*	4,68
	AU0017300R	Versión B	4,68

Sólo se muestra el precio del acabado Blanco /
Only the price of the White finish is shown

Producto acabado compatible:
Finished product compatible:

			€
9	**A32799E000**	600 mm	-
	A32799D000	700 mm	-
	A32799C000	800 mm	-
	A32799B000	1000 mm	-
10 2 un	**A816757339**		-
11	**A816760001**		-
12	**A816761001**		-
35	**A856826...**	600 mm	-
	A856827...	700 mm	-
	A856828...	800 mm	-
	A856830...	1000 mm	-

Debba

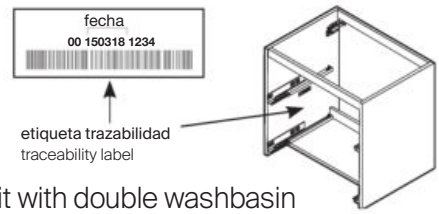

Mueble base de cuatro cajones con lavabo doble / Four drawers vanity unit with double washbasin

UNIK DEBBA STANDARD: CONJUNTO 2 MUEBLES DE 2 CAJONES Y LAVABO Vanity unit 2 drawers + basin	
A855971...	1200 mm

PACK DEBBA STANDARD: UNIK + ESPEJO+ APLIQUE LED Unik +mirror + LED light	
A855989...	1200 mm

Atención: Para sustituir los cajones antiguos (versión A) por uno nuevo (versión B), será necesario cambiar también las guías (15B) y los enganches (19B) del cajón.
Warning: To replace the old drawers (version A) with a new one (version B), you must change the guides (15) and drawer catches (19).

Versión A	antes fecha de trazabilidad 150318 / traceability date before 150318
Versión B	después fecha de trazabilidad 150318 / traceability date after 150318

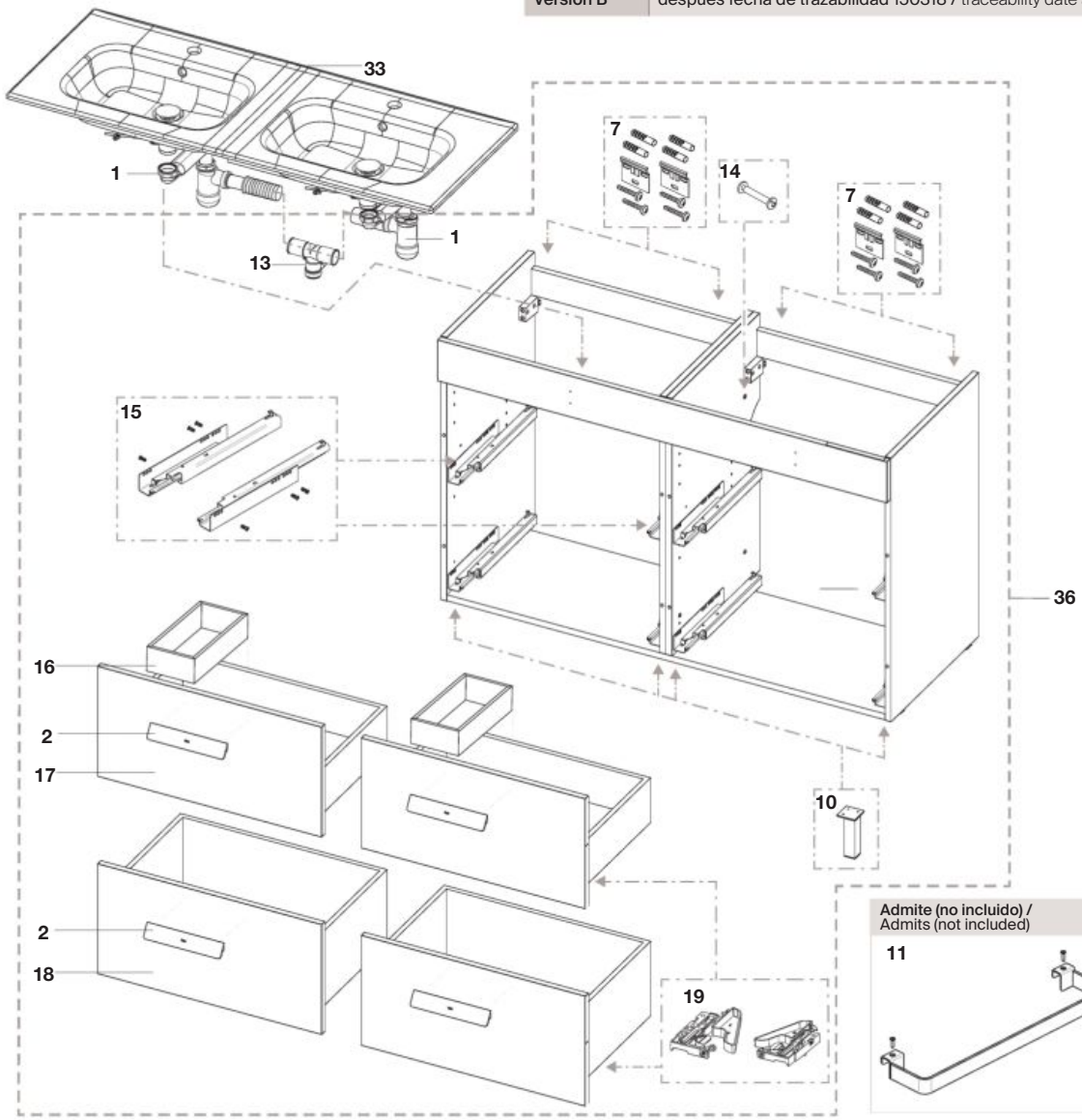

Admite (no incluido) /
Admits (not included)

* Hasta fin de existencias
* Until end of stock

Las últimas posiciones de cada código indican el acabado (color):
The last positions indicates the finish (colour):

Producto Product	Recambio Spare part	Acabado Finished
806	**WH**	**Blanco brillo /** White Lacquered
154	**WE**	Wengé
155	**OA**	Roble / Urban Oak
153	**GA**	**Gris antracita /** Grey Anthracite

Sólo se muestra el precio del acabado Blanco /
Only the price of the White finish is shown

				€
1		**AU0014100R**		44,90
2	2 un	**AU0023000R**	210 mm	29,20
7		**AU0013300R**		15,80
13		**AU0020800R**		7,68
14	5 un	**AU0020900R**		14,80
15		**AU0021300R**	Versión A*	48,50
		AU0017600R	Versión B	54,30

				€
16		**AU0021200R**		22,80
17		**AU00210..R**	600 mm A*	54,30
		AU00742..R	600 mm B	57,50
18		**AU00211..R**	600 mm A*	48,30
		AU00746..R	600 mm B	60,00
19		**AU0017300R**	Versión A*	4,68
		AU0017300R	Versión B	4,68

Producto acabado compatible:
Finished product compatible:

				€
10	2 un	**A816757339**		-
11		**A816760001**		-
12		**A816761001**		-
33		**A32799A000**	1200 mm	-
36 1	2 un	**A856831...**	1200 mm	-

Debba

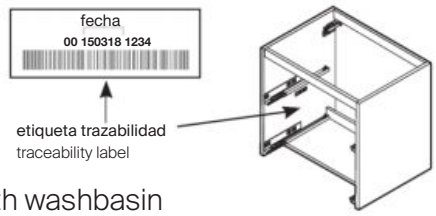

Mueble base de tres cajones con lavabo / Three drawers vanity unit with washbasin

UNIK Debba standard: CONJUNTO MUEBLE DE 3 CAJONES Y LAVABO **Vanity unit 3 drawers + basin**	
A855976...	1000 mm
A855974...	800 mm
A855973...	700 mm
A855972...	600 mm

PACK Debba standard: UNIK + ESPEJO+ APLIQUE LED **Unik +mirror + LED light**	
A855994...	1000 mm
A855992...	800 mm
A855991...	700 mm
A855990...	600 mm

Atención: Para sustituir los cajones antiguos (versión A) por uno nuevo (versión B), será necesario cambiar también las guías (15B) y los enganches (19B) del cajón.
Warning: To replace the old drawers (version A) with a new one (version B), you must change the guides (15) and drawer catches (19).

Versión A	antes fecha de trazabilidad 150318 / traceability date before 150318
Versión B	después fecha de trazabilidad 150318 / traceability date after 150318

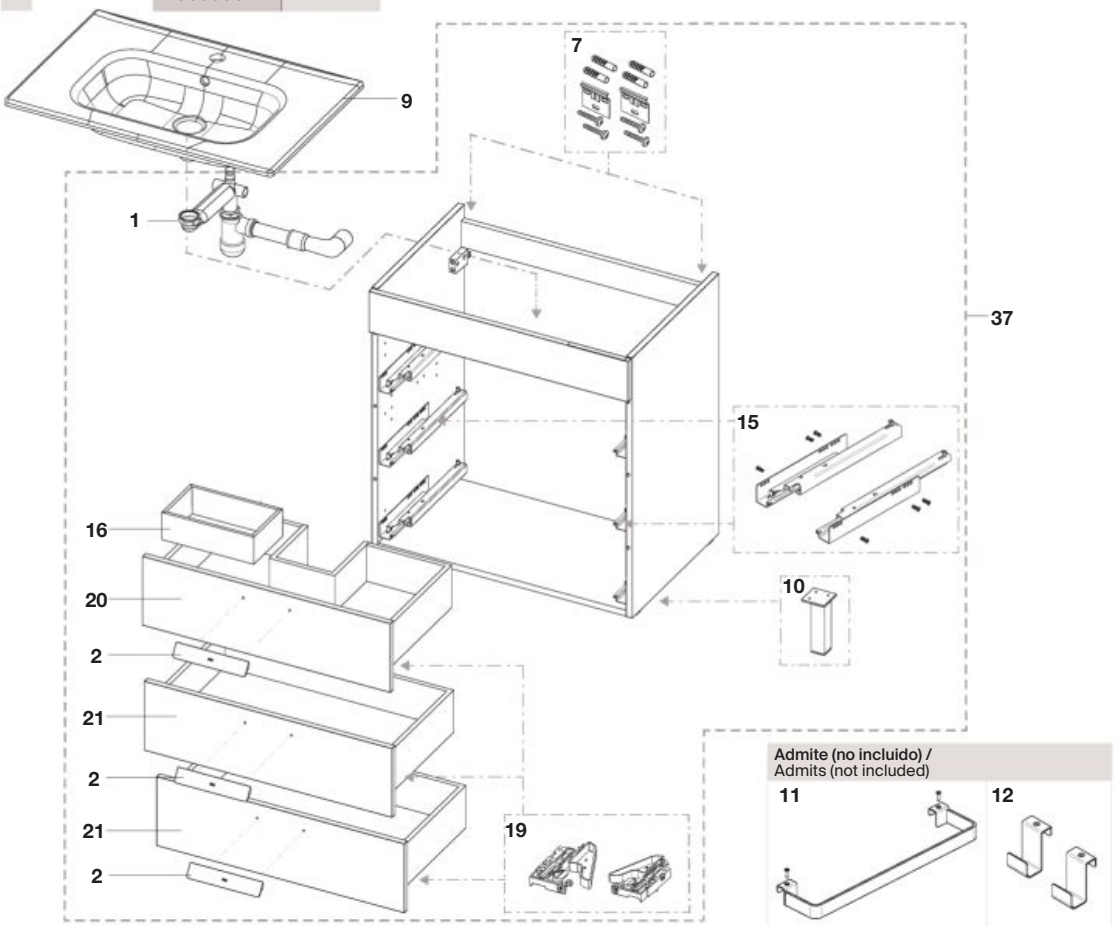

Admite (no incluido) /
Admits (not included)

* Hasta fin de existencias
* Until end of stock

Las últimas posiciones de cada código indican el acabado (color): The last positions indicates the finish (colour):

Producto Product	Recambio Spare part	Acabado Finished
806	**WH**	**Blanco brillo /** White Lacquered
154	**WE**	**Wengé**
155	**OA**	**Roble /** Urban Oak
153	**GA**	**Gris antracita /** Grey Anthracite

				€
1		**AU0014100R**		44,90
2	2 un	**AU0023000R**	210 mm	29,20
7		**AU0013300R**		15,80
15		**AU0021300R**	Versión A*	48,50
		AU0017600R	Versión B	54,30
16		**AU0021200R**		22,80
19		**AU0017300R**	Versión A*	4,68
		AU0017300R	Versión B	4,68
20		**AU00221..R**	600 mm A*	57,80
		AU00223..R	700 mm A*	65,70
		AU00225..R	800 mm A*	66,80
		AU00227..R	1000 mm A*	76,30
		AU00750..R	600 mm B	61,50
		AU00751..R	700 mm B	66,00
		AU00752..R	800 mm B	67,50
		AU00753..R	1000 mm B	75,80

			€
21	**AU00222..R**	600 mm A*	56,80
	AU00224..R	700 mm A*	53,50
	AU00226..R	800 mm A*	61,20
	AU00228..R	1000 mm A*	68,30
	AU00754..R	600 mm B	56,20
	AU00755..R	700 mm B	60,80
	AU00756..R	800 mm B	63,50
	AU00757..R	1000 mm B	70,30

Sólo se muestra el precio del acabado Blanco /
Only the price of the White finish is shown

Producto acabado compatible:
Finished product compatible:

				€
9		**A32799E000**	600 mm	-
		A32799D000	700 mm	-
		A32799C000	800 mm	-
		A32799B000	1000 mm	-
10	2 un	**A816757339**		-
11		**A816760001**		-
12		**A816761001**		-
37		**A856832...**	600 mm	-
		A856833...	700 mm	-
		A856834...	800 mm	-
		A856836...	1000 mm	-

Debba

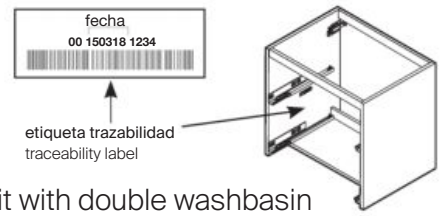

Mueble base de seis cajones con lavabo doble / Six drawers vanity unit with double washbasin

UNIK DEBBA STANDARD: CONJUNTO 2 MUEBLES DE 3 CAJONES Y LAVABO Vanity unit 3 drawers + basin	
A855977...	1200 mm

PACK DEBBA STANDARD: UNIK + ESPEJO+ APLIQUE LED Unik +mirror + LED light	
A855995...	1200 mm

Atención: Para sustituir los cajones antiguos (versión A) por uno nuevo (versión B), será necesario cambiar también las guías (15B) y los enganches (19B) del cajón.
Warning: To replace the old drawers (version A) with a new one (version B), you must change the guides (15) and drawer catches (19).

Versión A	antes fecha de trazabilidad 150318 / traceability date before 150318
Versión B	después fecha de trazabilidad 150318 / traceability date after 150318

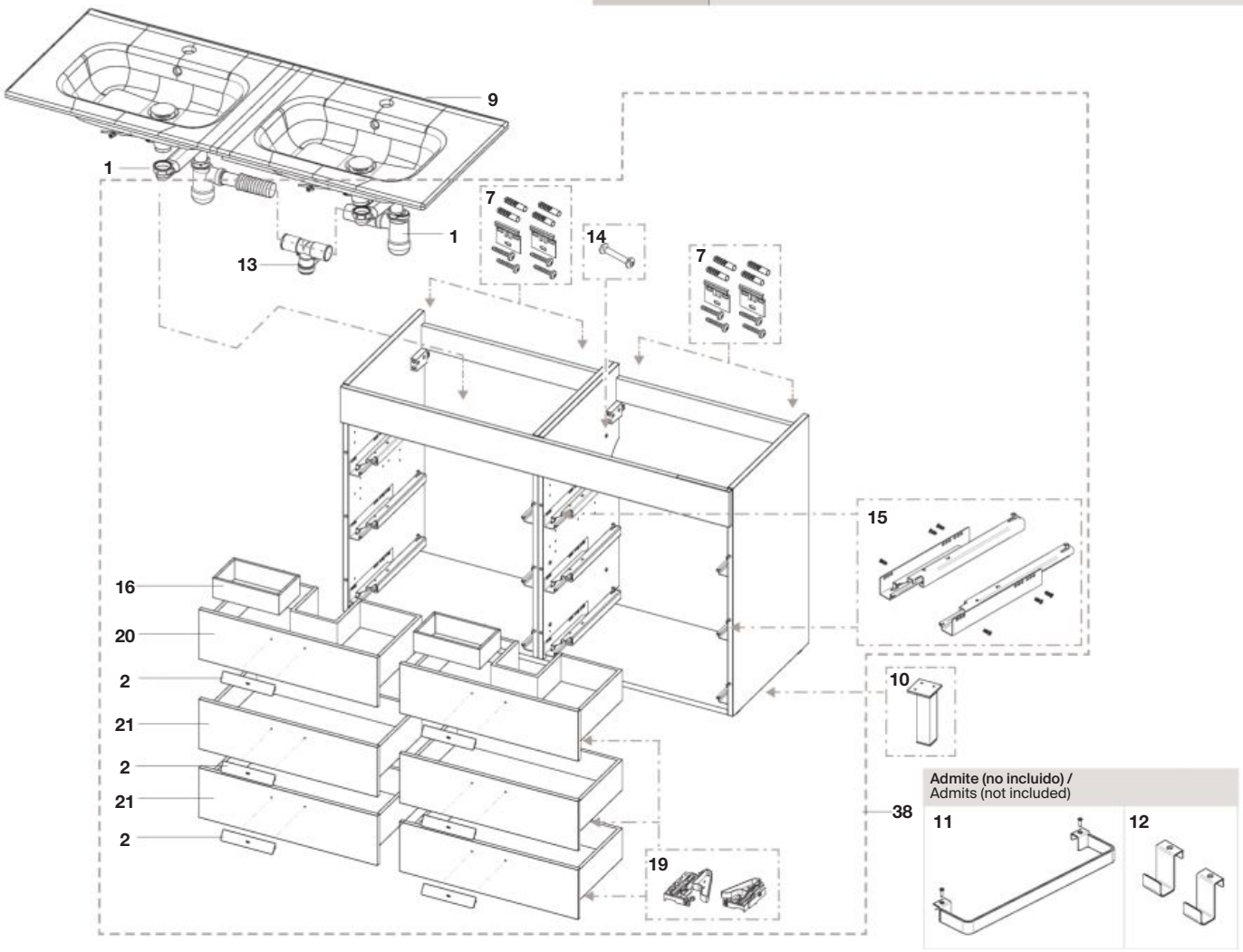

* Hasta fin de existencias
* Until end of stock

Las últimas posiciones de cada código indican el acabado (color):
The last positions indicates the finish (colour):

Producto Product	Recambio Spare part	Acabado Finished
806	**WH**	**Blanco brillo /** White Lacquered
154	**WE**	**Wengé**
155	**OA**	**Roble /** Urban Oak
153	**GA**	**Gris antracita /** Grey Anthracite

Sólo se muestra el precio del acabado Blanco /
Only the price of the White finish is shown

				€
1		**AU0014100R**		44,90
2	2 un	**AU0023000R**	210 mm	29,20
7		**AU0013300R**		15,80
13		**AU0020800R**		7,68
14	5 un	**AU0020900R**		14,80
15		**AU0021300R**	Versión A*	48,50
		AU0017600R	Versión B	54,30

				€
16		**AU0021200R**		22,80
19		**AU0017300R**	Versión A*	4,68
		AU0017300R	Versión B	4,68
20		**AU00221..R**	600 mm A*	57,80
		AU00750..R	600 mm B	61,50
21		**AU00222..R**	600 mm A*	56,80
		AU00754..R	600 mm B	56,20

Producto acabado compatible:
Finished product compatible:

				€
9		**A32799B000**	1200 mm	-
10	2 ud	**A816757339**		-
11		**A816760001**		-
12		**A816761001**		-
38		**A856837..**	1200 mm	-
1			2 un	-

Debba

Lavabos / Washbasins

A325993000
A325994000
A325996000
A325998000

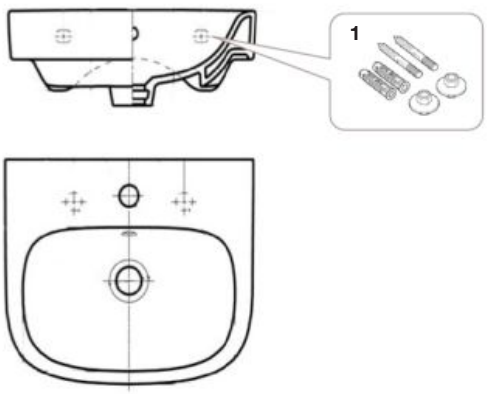

COMPATIBILIDAD PEDESTAL / SEMIPEDESTAL Compatibility pedestal / semipedestal	10	11
A325993...	•	•
A325994...	•	•
A325996...	•	•
A325998...	-	-

ADMITE (no incluido) / ADMITS (not included)

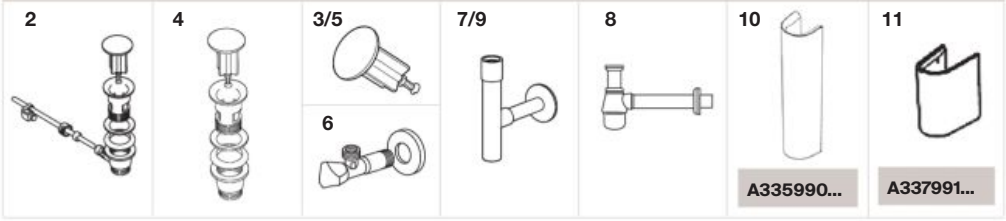

		€
1	**AV0007500R**	5,51

Admite (no incluido)
Admits (not included)

			€
2	**A525021200**		31,20
3	**AG0055800R**		14,40
4	**A505400000**	Novatic	38,40
5	**AG0077100R**	Novatic	40,60

			€
6	**AG0078200R**	1/2"-3/8"	30,90
7	**A506403110**	Totem	-
8	**A506401614**	Botella	30,30
9	**A506403810**	Minimal	111,00

Semipedestales / Semipedestals

A337991000

COMPATIBILIDAD PEDESTAL / SEMIPEDESTAL Compatibility pedestal / semipedestal	**A335990..0 A335990..U** (10)	A337991..0 (11)
A325993...	•	•
A325994...	•	•
A325996...	•	•
A325998...	-	-

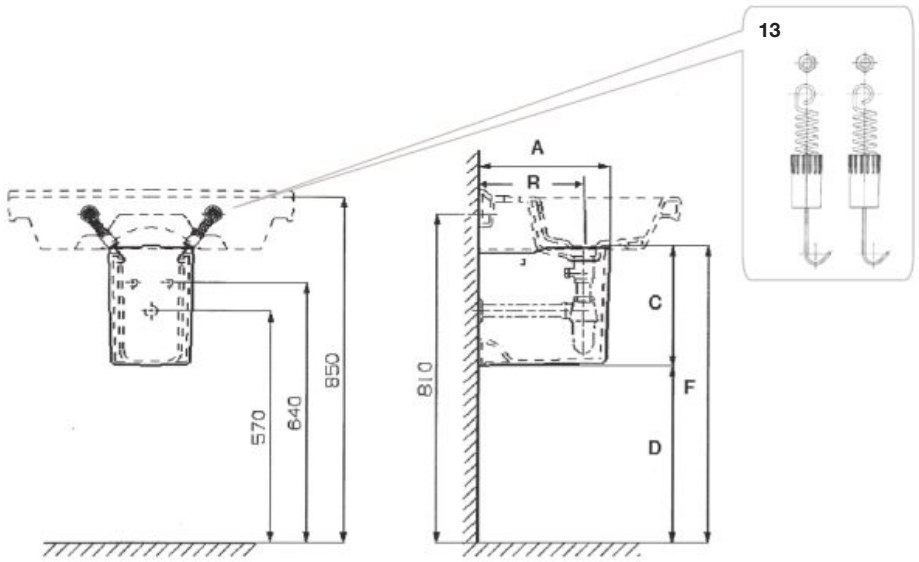

		€
13	**AV0015900R**	8,02

Debba

Taza tanque bajo salida horizontal / Close-coupled horizontal outlet bowl

A342997000	Square
A34299J000	Round

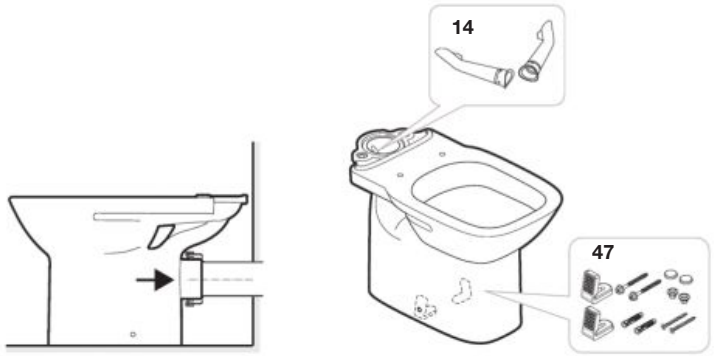

ADMITE (no incluido) / ADMITS (not included)

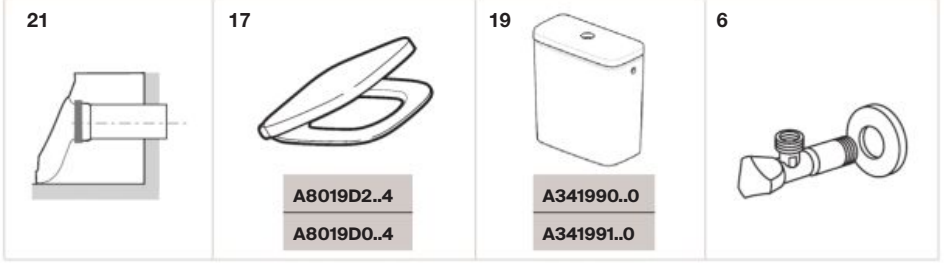

		€
14	**AV0020600R**	3,33
47	**AV0009400R**	6,16

Admite (no incluido)
Admits (not included)

			€
6	**AG0078200R**	1/2”-3/8”	30,90
21	**AV0012400R**		34,80

Taza tanque bajo salida vertical / Close-coupled vertical outlet bowl

A342998000	Square
A34299K000	Round

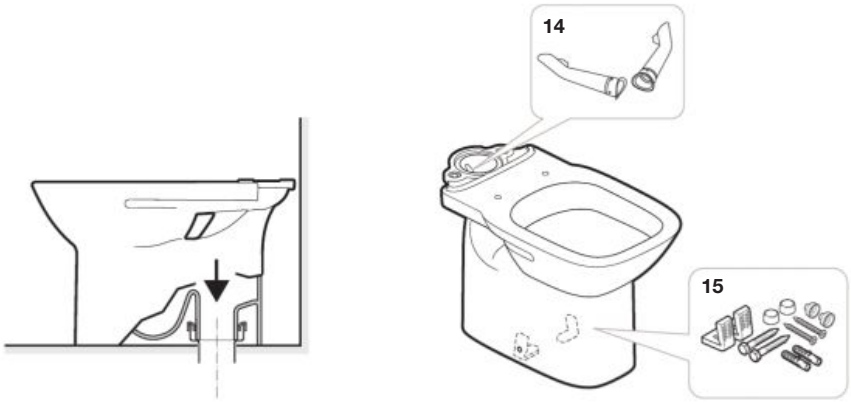

ADMITE (no incluido) / ADMITS (not included)

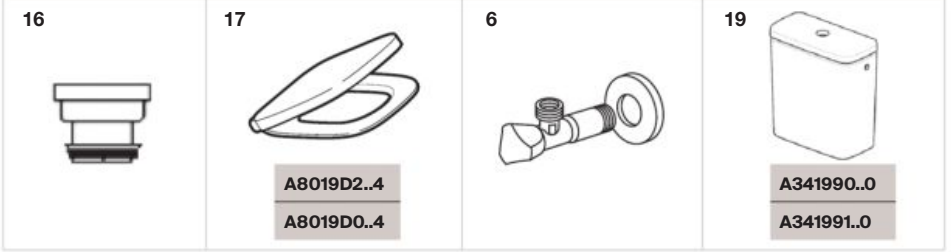

		€
14	**AV0020600R**	3,33
15	**AV0009400R**	6,16

Admite (no incluido)
Admits (not included)

			€
6	**AG0078200R**	1/2”-3/8”	30,90
16	**AV0007800R**		8,11

Debba

Taza suspendida / Wall-hung bowl

A346997000	Square

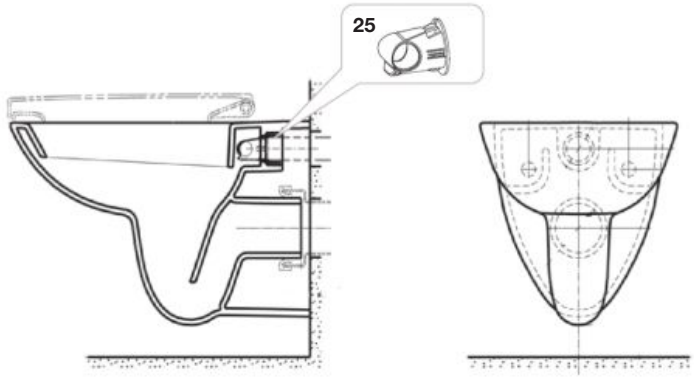

ADMITE (no incluido) / ADMITS (not included)



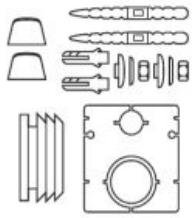







A8019D2..4
A8019D0..4

		€
25	**AV0012300R**	3,35

Admite (no incluido) /
Admits (not included)

			€
16	**AV0007800R**		8,11
20	**AV0016200R**		2,63
21	**AV0012400R**		34,80
26	**AV0013600R**		14,40
27	**AV0002900R**	Ø40	24,70

Debba

Tanque entrada lateral con mec. doble pulsador 4,5/3L / Side inlet cistern with dual flush 4,5/3L

A341990000

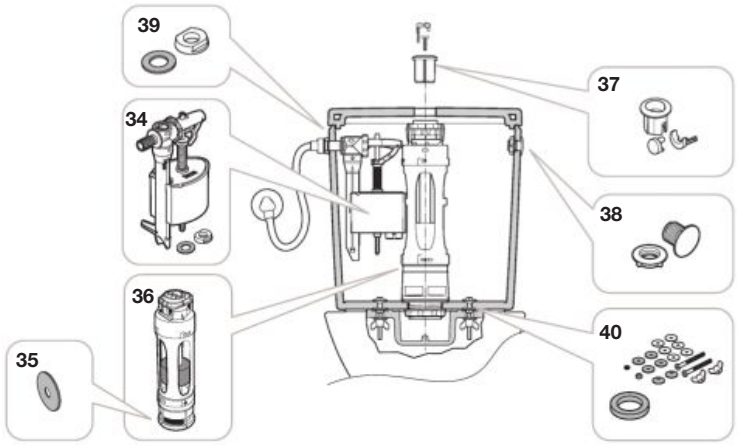

G: Kit genérico, 4 juntas de diferentes series
G: Generic kit, 4 different series joints

			€
34	**A822508800**		16,90
	A822504300	Tuerca metal	19,20
35	**AH0007100R**		2,74
	AH0001400R	"G"	8,28
36	**AH0000100R**		35,10
37	**AH0001800R**		13,30
38	**AV0012600R**		2,54
38 39	**AV0020900R**		2,64
40	**AV0021700R**		11,50

ADMITE (no incluido) / ADMITS (not included)

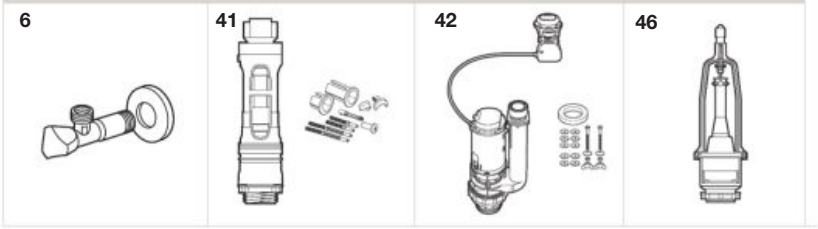

Admite (no incluido)
Admits (not included)

			€
6	**AG0078200R**	1/2"-3/8"	30,90
41	**A822502100**	Doble	N.D.
42	**A822502800**	Cable	N.D.
46	**A822502200**	Simple	32,60

Tanque entrada inferior con mec. doble pulsador 4,5/3L / Bottom inlet cistern with dual flush 4,5/3L

A341991000

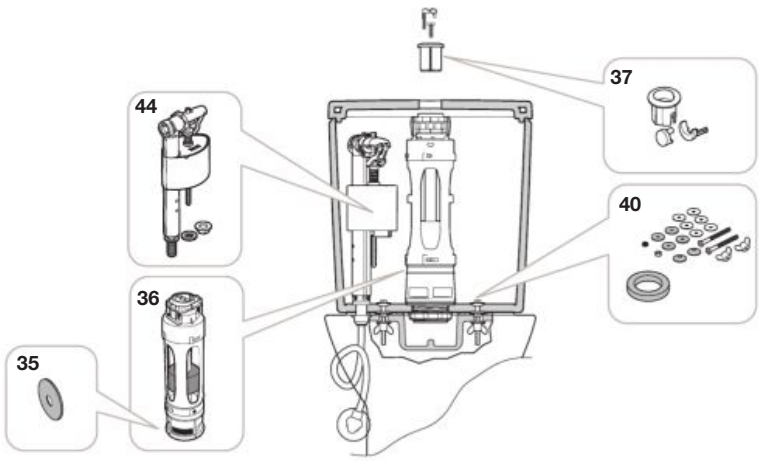

			€
35	**AH0007100R**		2,74
35	**AH0001400R**	"G"	8,28
36	**AH0000100R**		35,10
37	**AH0001800R**		13,30
40	**AV0021700R**		11,50
44	**A822508900**		-
	A822504400	tuerca metal	23,20

ADMITE (no incluido) / ADMITS (not included)

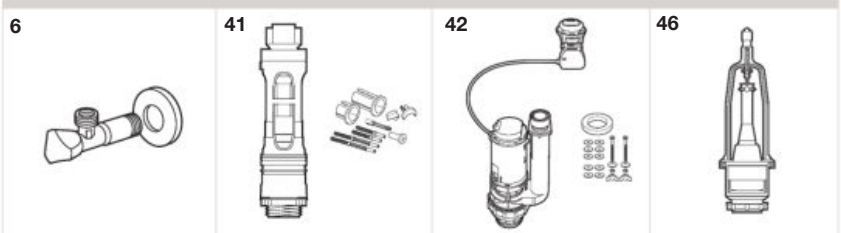

Admite (no incluido)
Admits (not included)

			€
6	**AG0078200R**	1/2"-3/8"	30,90
41	**A822502100**	Doble	N.D.
42	**A822502800**	Cable	N.D.
46	**A822502200**	Simple	32,60

Debba

Bidé / Bidet

A355994000	Square
A355998000	Round

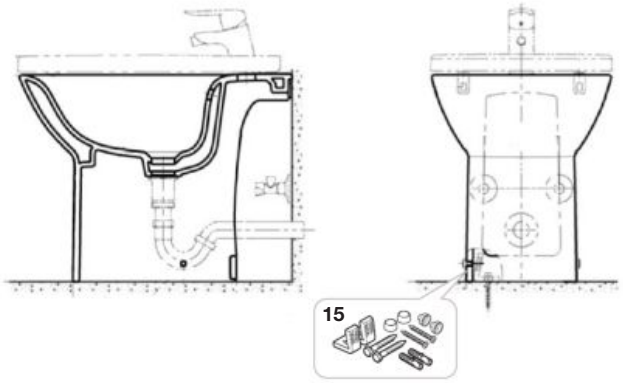

			€
15	**AV0009400R**		6,16

Admite (no incluido)
Admits (not included)

			€
2	**A525021200**		31,20
3	**AG0055800R**		14,40
6	**AG0078200R**	1/2"-3/8"	30,90
29	**A506402210**		33,60

ADMITE (no incluido) / ADMITS (not included)

2



3



6



29



18



A8069D2..4
A8069D0..4

Bidé suspendido / Wall-hung bidet

A355995000	Square
A357999000	Round

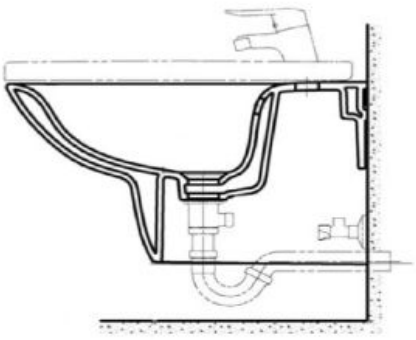

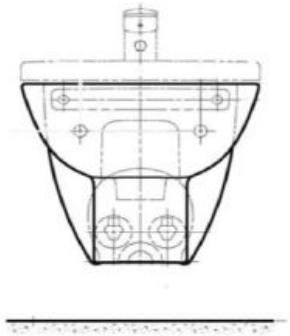

ADMITE (no incluido) / ADMITS (not included)

18



A8069D2..4
A8069D0..4

2

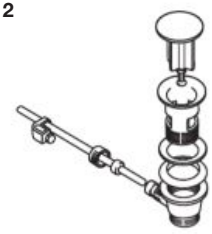

6

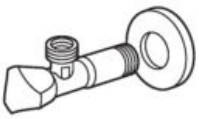

29



31

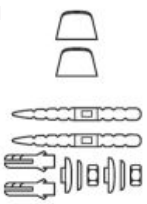

3



30

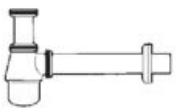

Admite (no incluido)
Admits (not included)

			€
2	**A525021200**		31,20
3	**AG0055800R**		14,40
6	**AG0078200R**	1/2"-3/8"	30,90
29	**A506402210**		33,60
30	**A506401814**		27,50
31	**AV0013500R**		14,40

Debba Compact

Mueble base de dos cajones con lavabo / Two drawers vanity unit with washbasin

UNIK BASE 2 CAJONES + LAVABO **Vanity unit 2 Drawers + basin**	
500	**A855904...**
600	**A855905...**
700	**A855906...**
800	**A855907...**

PACK UNIK + ESPEJO + APLIQUE **Unik + mirror + light**	
500	**A855912...**
600	**A855913...**
700	**A855914...**
800	**A855915...**

PACK UNIK + ARMARIO-ESPEJO + ARMARIO-ESTANTE **Unik + Cabinet Mirror + Cabinet shelf**	
600	**A855923...**
700	**A855925...**
800	**A855927...**

PACK UNIK + ARMARIO-ESPEJO **Unik + Cabinet Mirror**	
500	**A855922...**

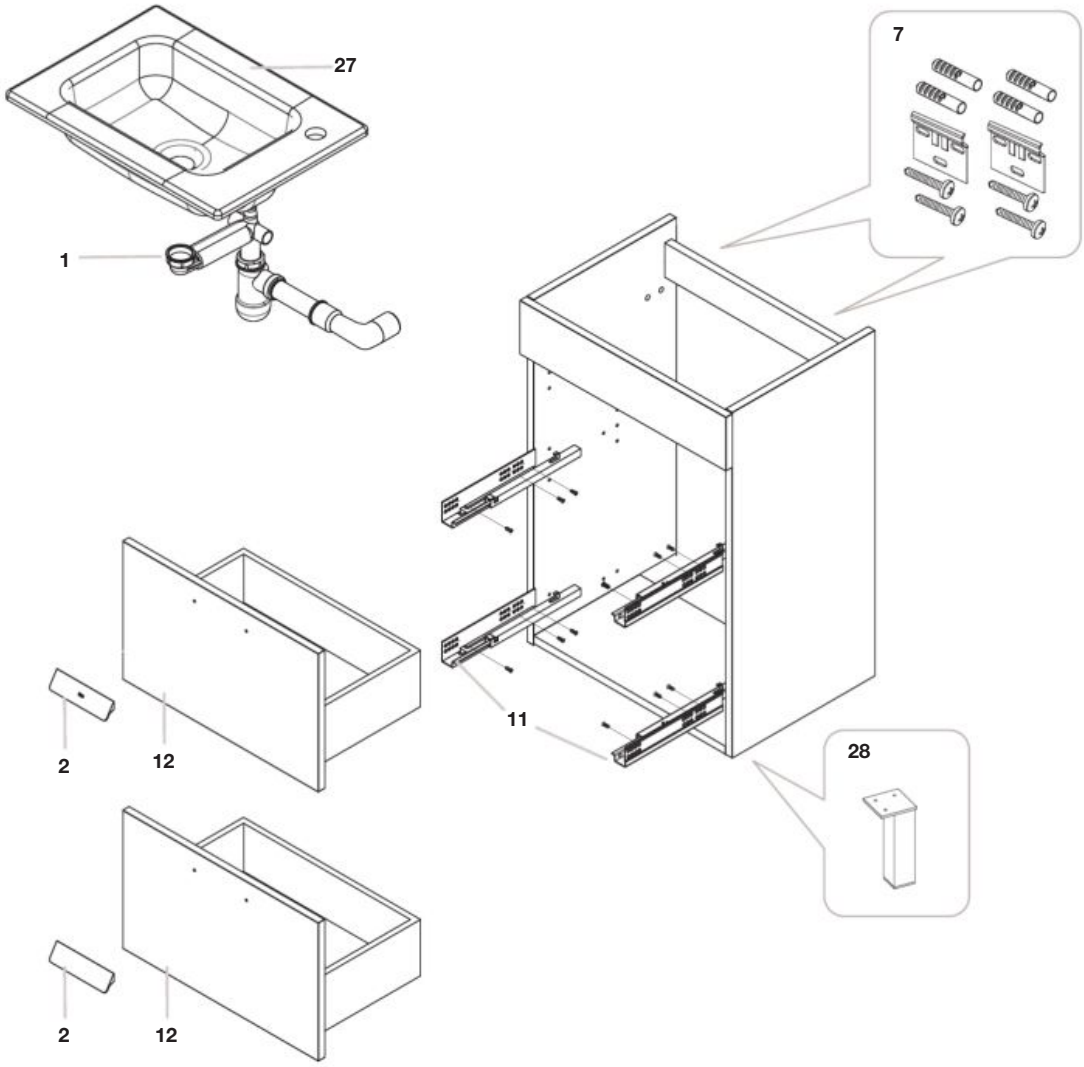

Las últimas posiciones de cada código indican el acabado (color):
The last positions indicates the finish (colour):

Producto Product	Recambio Spare part	Acabado Finished
806	**WH**	**Blanco brillo /** White Lacquered
154	**WE**	Wengé
155	**OA**	Roble / Urban Oak
153	**GA**	Gris antracita / Grey Anthracite

				€
1		**AU0014100R**		44,90
2	2 un	**AU00140C0R**	140 mm	45,80
7		**AU0013300R**		15,80
11		**AU0015400R**		44,30

			€
12	**AU00155WHR**	500 mm	81,20
	AU00155WER		N.D.
	AU00155OAR		N.D.
	AU00155GAR		81,20
	AU00156GAR	600 mm	94,70
	AU00156OAR		N.D.
	AU00156WER		N.D.
	AU00156WHR		92,00
	AU00157WHR	700 mm	101,00
	AU00157WER		N.D.
	AU00157OAR		101,00
	AU00157GAR		101,00
	AU00158GAR	800 mm	112,00
	AU00158OAR		117,00
	AU00158WER		N.D.
	AU00158WHR		110,00

Producto acabado compatible:
Finished product compatible:

				€
27		**A32799J000**	500 mm	-
		A32799H000	600 mm	-
		A32799G000	700 mm	-
		A32799F000	800 mm	-
28	2 un	**A816757339**		-

Debba Compact

Columna una puerta / One door column

A856838...

Las últimas posiciones de cada código indican el acabado (color):
The last positions indicates the finish (colour):

Producto Product	Recambio Spare part	Acabado Finished
806	**WH**	Blanco brillo / White Lacquered
154	**WE**	Wengé
155	**OA**	Roble / Urban Oak
153	**GA**	Gris antracita / Grey Anthracite

			€
5	4 un	**AU0013900R**	8,63
10	2 un	**AU0089500R**	18,00
13	2 un	**AU0023000R**	29,20
14		**AU00160WHR**	N.D.
		AU00160WER	N.D.
		AU00160OAR	13,20
		AU00160GAR	13,20
15		**AU00161WHR**	53,00
		AU00161WER	53,00
		AU00161OAR	53,00
		AU00161GAR	53,00
16		**AU0013700R**	16,30
17	4 un		
17	4 un	**AU0013700R**	16,30
18		**AU0013800R**	12,10
19			

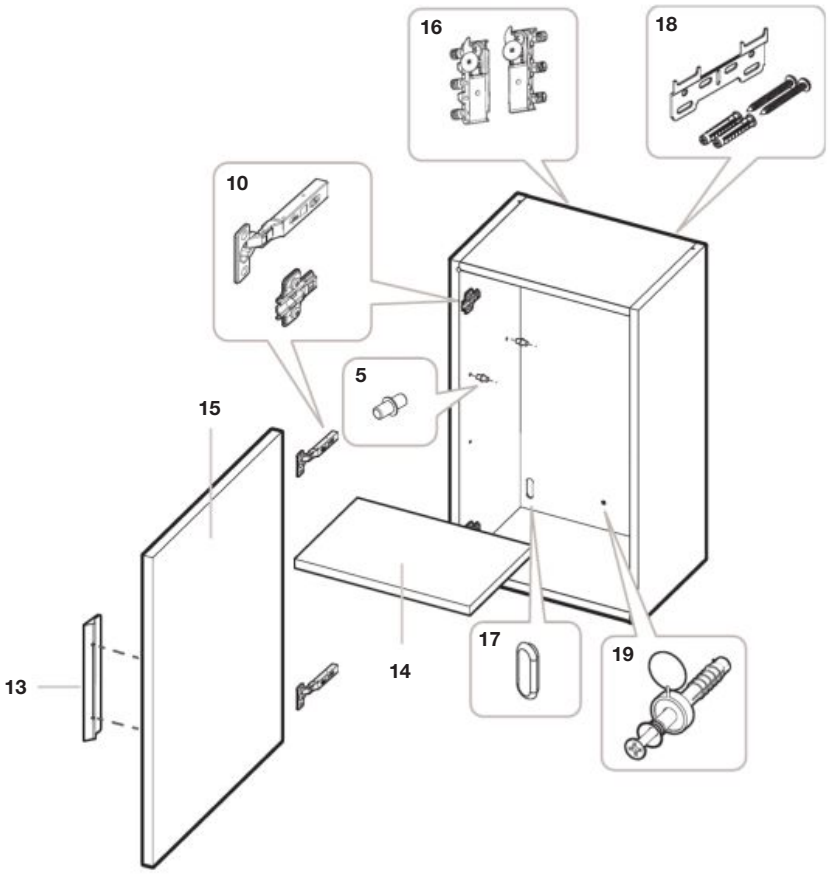

Camerino espejo de una puerta / One door cabinet mirror

A856840...	500 mm
A856839...	400 mm

Las últimas posiciones de cada código indican el acabado (color):
The last positions indicates the finish (colour):

Producto Product	Recambio Spare part	Acabado Finished
806	**WH**	Blanco brillo / White Lacquered
155	**OA**	Roble / Urban Oak
154	**WT**	Wengé texturizado / Textureted wenge
153	**GA**	Gris antracita / Grey Anthracite
222	**WA**	Nogal / Wallnut
201	**WE**	Wengé

				€
10	2 un	**AU0089500R**		18,00
17	4 un	**AU0013700R**		16,30
16				
17	4 un	**AU0013700R**		16,30
18		**AU0013800R**		12,10
19				
20	4 un	**AU0013500R**		5,63
21	4 un	**AU0016500R**		5,47
22		**AU0016400R**	400 mm	12,40
		AU0016700R	500 mm	15,10
23		**AU00162GAR**	400 mm	81,80
		AU00162OTR		N.D.
		AU00162WAR		N.D.
		AU00162WER		N.D.
		AU00162WHR		79,50
		AU00162WTR		N.D.
		AU00166..R	500 mm	92,00
24		**AU00163C0R**		8,92

Sólo se muestra el precio del acabado Blanco /
Only the price of the White finish is shown

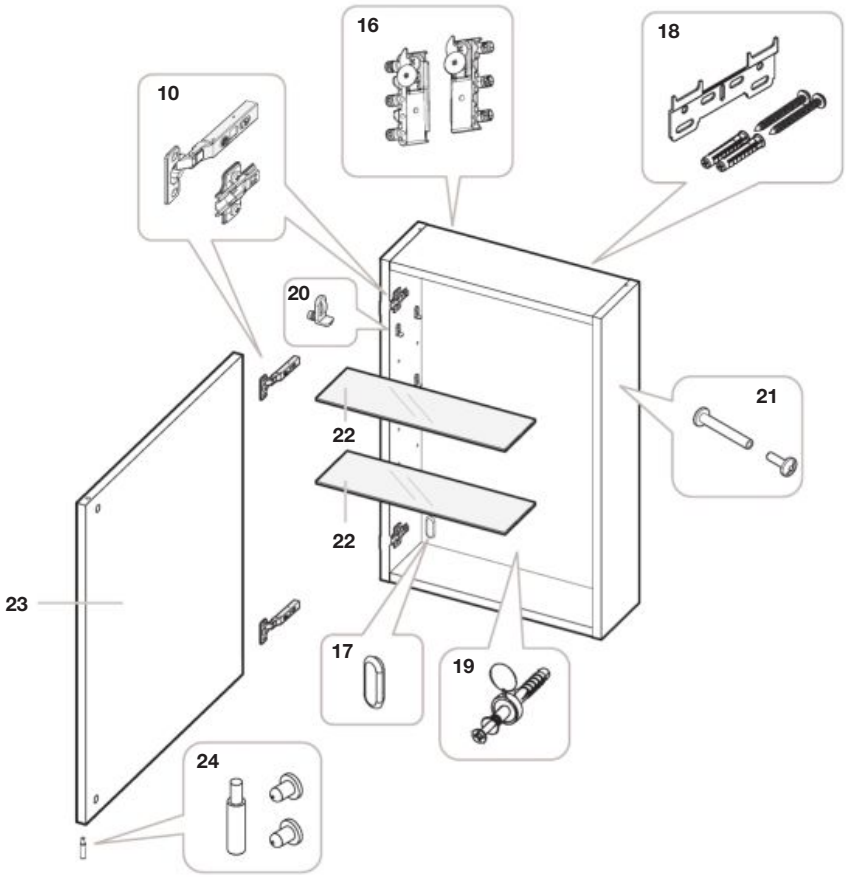

Debba Compact

Columna dos puertas / Two doors column

A856844...	1500 mm

Las últimas posiciones de cada código indican el acabado (color):
The last positions indicates the finish (colour):

Producto	Recambio	Acabado
Product	Spare part	Finished
806	**WH**	**Blanco brillo /** White Lacquered
154	**WE**	Wengé
155	**OA**	Roble / Urban Oak
153	**GA**	Gris antracita / Grey Anthracite

				€
2	2 un	**AU0023000R**	200 mm	29,20
3	4 un	**AU0013900R**		8,63
4	2 un	**AU0089500R**		18,00
22 25		**AU0013800R**		12,10
23		**AU0013700R**		16,30
24	4 un			
24	4 un	**AU0013700R**		16,30
26		**AU00160WHR**		N.D.
		AU00160WER		N.D.
		AU00160OAR		13,20
		AU00160GAR		13,20
27		**AU00229WHR**		42,30
		AU00229WER		34,70
		AU00229OAR		36,30
		AU00229GAR		50,30

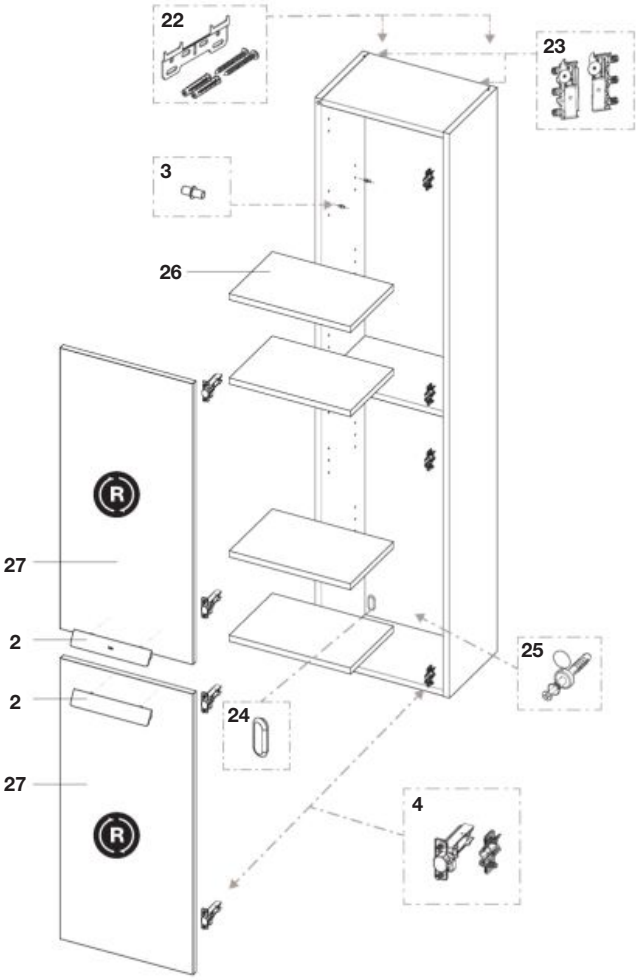

Espejo y aplique LED / Mirror & LED spotlight

A856663...	1200 x 700 mm
A856664...	1000 x 700 mm
A856659...	900 x 700 mm
A856665...	800 x 700 mm
A856666...	700 x 700 mm
A856667...	600 x 700 mm

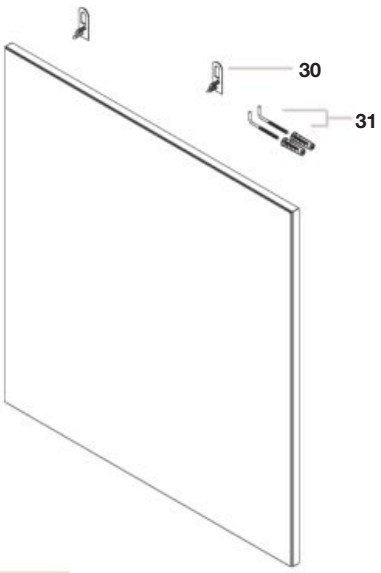

A813067000	600 mm
A813068000	400 mm
A813069000	250 mm

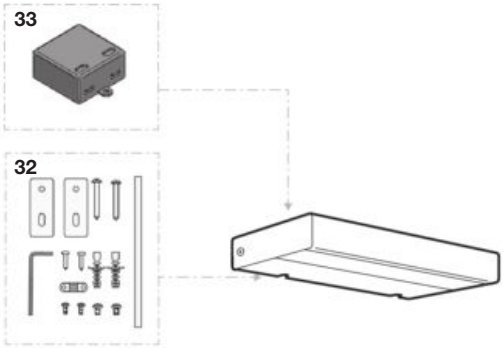

Las últimas posiciones de cada código indican el acabado (color):
The last positions indicates the finish (colour):
806 Blanco / White Lacquered
155 Roble texturizado / Oak
154 Wenge texturizado / Textureted wenge
153 Gris antracita / Grey Anthracite

			€
30	2 un	**AU0004500R**	5,23
31	2 un	**AU0005200R**	5,23

		€
32	**AU0023100R**	2,47
33	**AU0023200R**	21,20

Victoria-N

Mueble base de dos cajones / Two drawers vanity unit

UNIK VICTORIA-N: MUEBLE BASE 2 CAJONES CON LAVABO Base unit 2 drawers with washbasin	
A852468...	550 mm
A852095...	600 mm
A852096...	700 mm
A852097...	800 mm
A852098...	1000 mm

PACK VICTORIA-N: UNIK 2 CAJONES + ESPEJO + LUMINARIA 2 drawers unik + mirror + lighting	
A852105...	600 mm
A852106...	700 mm
A852107...	800 mm
A852108...	1000 mm

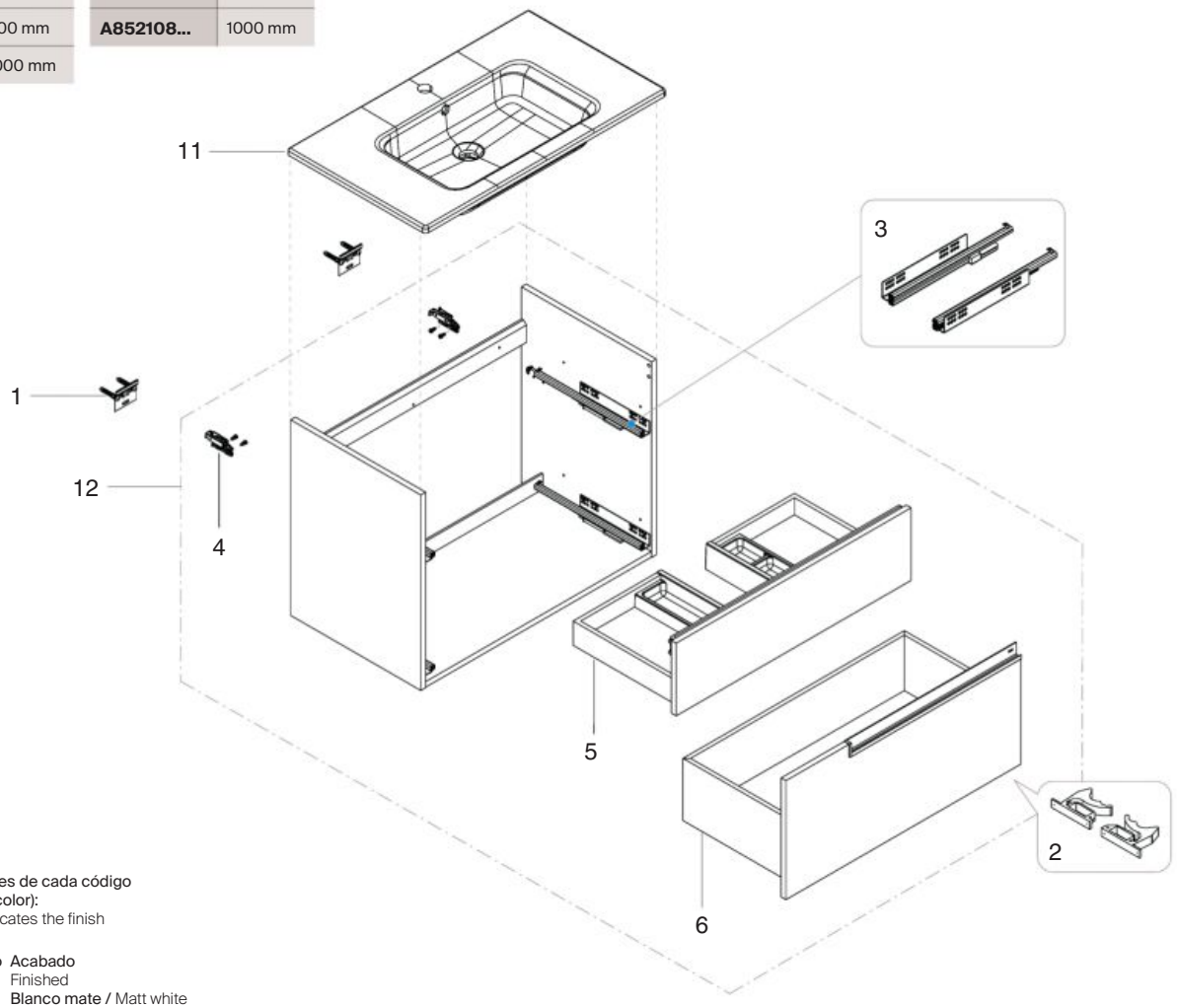

Las últimas posiciones de cada código indican el acabado (color):
The last positions indicates the finish (colour):

Producto / Product	Recambio / Spare part	Acabado / Finished
509	**MW**	**Blanco mate /** Matt white
531	**OX**	**Onix /** Onyx
564	**SV**	**Verde salvia /** Sage green
541	**LA**	**Fresno claro /** Light ash
517	**WL**	**Nogal /** Walnut

				€
1	2 un	**AU0013300R**		15,80
2		**AU0017300R**		4,68
3		**AU0038500R**		20,50
4		**AU0114400R**		9,60
5		**AU01162..R**	550 mm	138,00
		AU01126..R	600 mm	150,00
		AU01129..R	700 mm	156,00
		AU01131..R	800 mm	164,00
		AU01133..R	1000 mm	183,00
6		**AU01163..R**	550 mm	134,00
		AU01127..R	600 mm	129,00
		AU01130..R	700 mm	142,00
		AU01132..R	800 mm	154,00
		AU01134..R	1000 mm	180,00

Sólo se muestra el precio del acabado Blanco /
Only the price of the White finish is shown

Producto acabado compatible:
Finished product compatible:

			€
11	**A3279A8000**	600mm	-
	A3279A7000	700mm	-
	A3279A4000	800mm	-
	A3279A1000	1000mm	-
12	**A857919...**	600mm	-
	A857921...	700mm	-
	A857922..	800mm	-
	A857923..	1000mm	-

Victoria-N

Mueble base de dos cajones / Two drawers vanity unit

UNIK VICTORIA-N: MUEBLE BASE 2 CAJONES CON LAVABO Base unit 2 drawers with washbasin	
A852099...	1200 mm

PACK VICTORIA-N: UNIK 2 CAJONES + ESPEJO + LUMINARIA 2 drawers unik + mirror + lighting	
A852109...	1200 mm

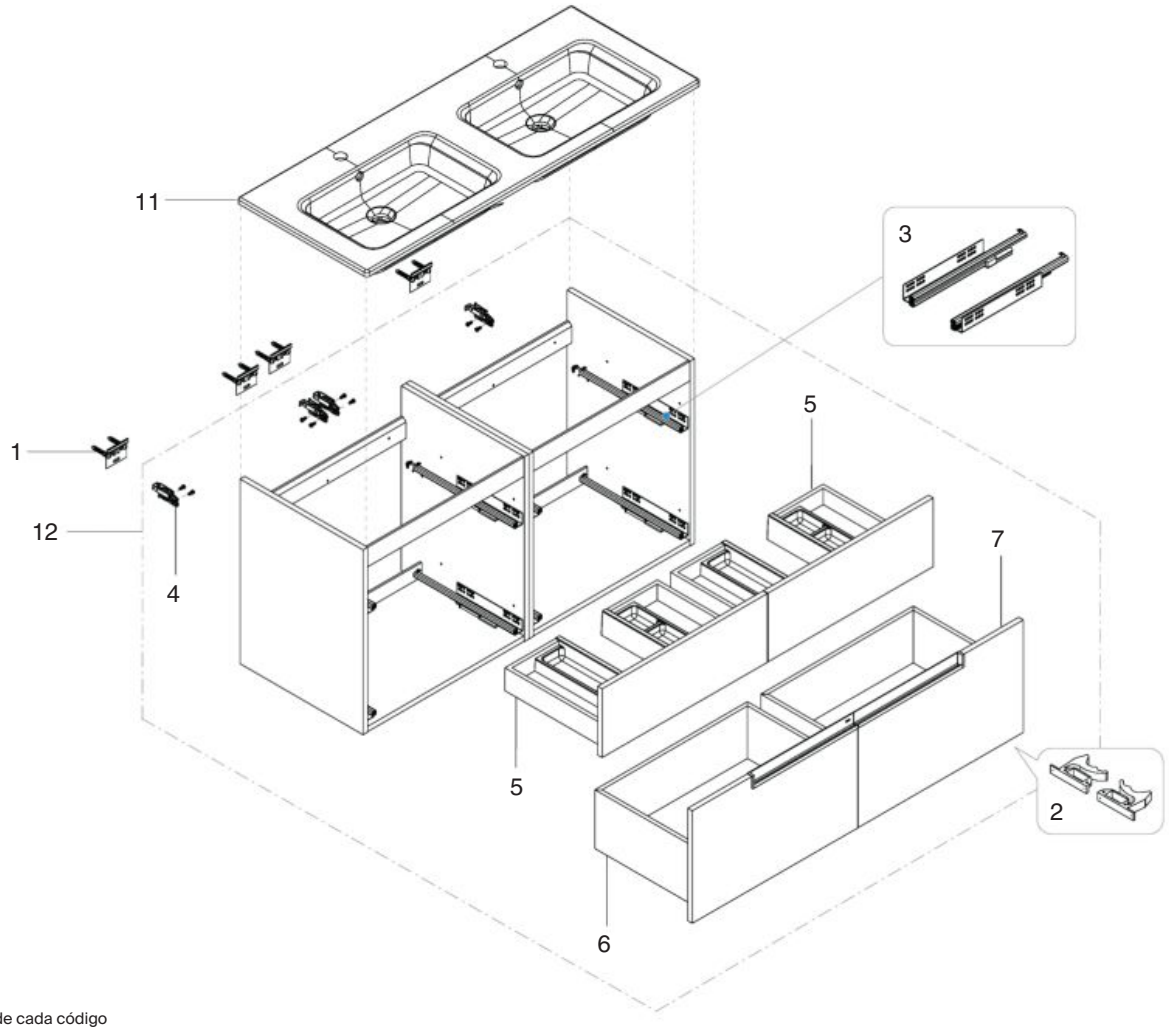

Las últimas posiciones de cada código indican el acabado (color):
The last positions indicates the finish (colour):

Producto Product	Recambio Spare part	Acabado Finished
509	**MW**	**Blanco mate /** Matt white
531	**OX**	**Onix /** Onyx
564	**SV**	**Verde salvia /** Sage green
541	**LA**	**Fresno claro /** Light ash
517	**WL**	**Nogal /** Walnut

				€
1	2 un	**AU0013300R**		15,80
2		**AU0017300R**		4,68
3		**AU0038500R**		20,50
4		**AU0114400R**		9,60
5		**AU01126MWR**	600 mm	150,00
		AU01126OXR		150,00
		AU01126SVR		143,00
		AU01126LAR		144,00
		AU01126WLR		144,00

				€
6		**AU01127MWR**	600 mm	128,00
		AU01127OXR		129,00
		AU01127SVR		120,00
		AU01127LAR		121,00
		AU01127WLR		121,00
7		**AU01128MWR**	600 mm	125,00
		AU01128OXR		125,00
		AU01128SVR		117,00
		AU01128LAR		118,00
		AU01128WLR		118,00

Producto acabado compatible:
Finished product compatible:

			€
11	**A3279A0000**	1200mm	-
12	**A857919...**	600mm DCH/RH	-
	A857920...	600mm IZQ/LH	-

Victoria-N

Mueble base de tres cajones / Three drawers vanity unit

UNIK VICTORIA-N: MUEBLE BASE 3 CAJONES CON LAVABO Base unit 3 drawers with washbasin	
A852469...	550 mm
A852100...	600 mm
A852101...	700 mm
A852102...	800 mm
A852103...	1000 mm

PACK VICTORIA-N: UNIK 3 CAJONES + ESPEJO + LUMINARIA 3 drawers unik + mirror + lighting	
A852110...	600 mm
A852111...	700 mm
A852112...	800 mm
A852113...	1000 mm

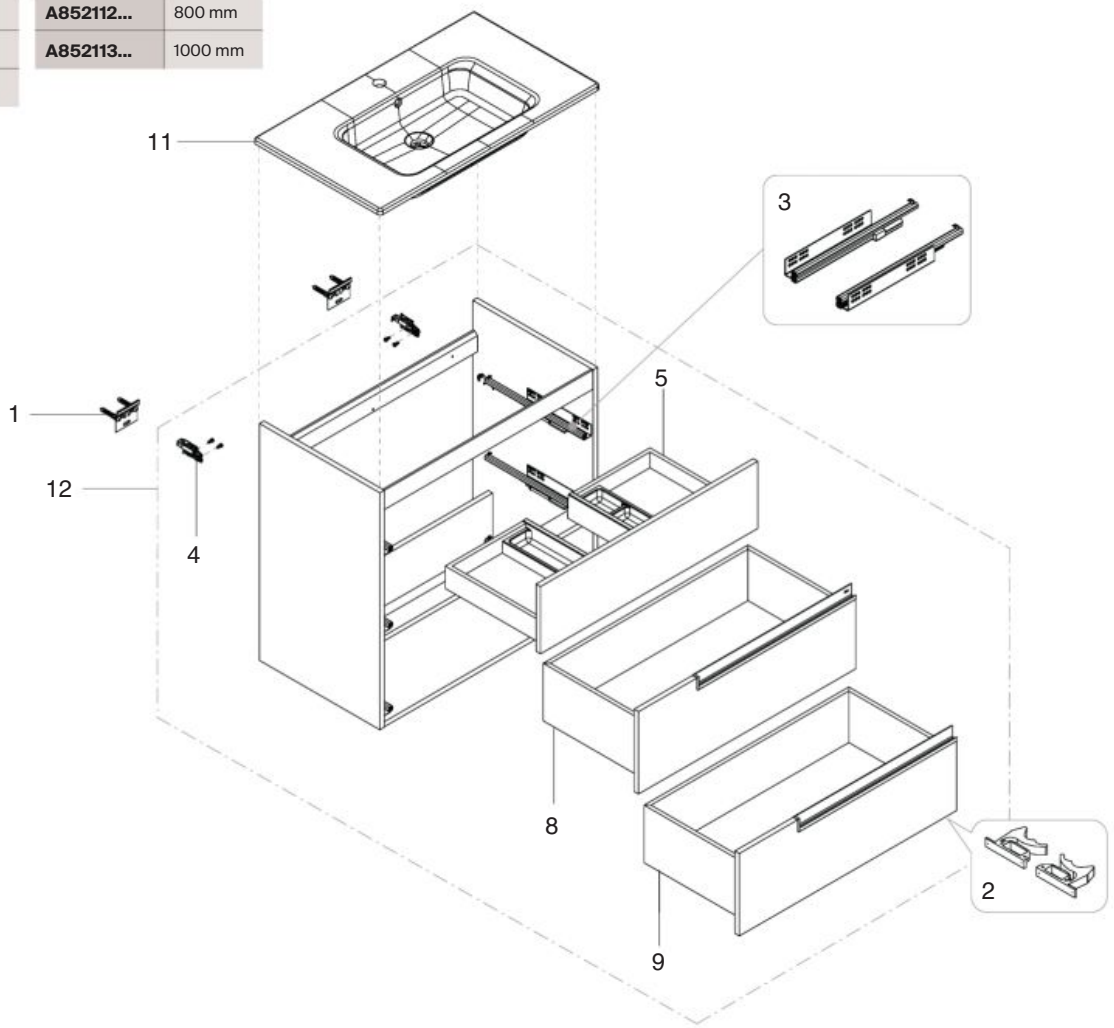

Las últimas posiciones de cada código indican el acabado (color):
The last positions indicates the finish (colour):

Producto / Product	Recambio / Spare part	Acabado / Finished
509	**MW**	**Blanco mate /** Matt white
531	**OX**	**Onix /** Onyx
564	**SV**	**Verde salvia /** Sage green
541	**LA**	**Fresno claro /** Light ash
517	**WL**	**Nogal /** Walnut

Sólo se muestra el precio del acabado Blanco /
Only the price of the White finish is shown

				€
1	2 un	**AU0013300R**		15,80
2		**AU0017300R**		4,68
3		**AU0038500R**		20,50
4		**AU0114400R**		9,60
5		**AU01162..R**	550 mm	138,00
		AU01126..R	600 mm	150,00
		AU01129..R	700 mm	156,00
		AU01131..R	800 mm	164,00
		AU01133..R	1000 mm	183,00

				€
8		**AU01164..R**	550 mm	129,00
		AU01135..R	600 mm RH	124,00
		AU01138..R	700 mm	137,00
		AU01140..R	800 mm	148,00
		AU01142..R	1000 mm	173,00
9		**AU01165..R**	550 mm	127,00
		AU01136..R	600 mm RH	121,00
		AU01139..R	700 mm	133,00
		AU01141..R	800 mm	145,00
		AU01143..R	1000 mm	170,00

Producto acabado compatible:
Finished product compatible:

			€
7	**A3279A8000**	600mm	-
	A3279A7000	700mm	-
	A3279A4000	800mm	-
	A3279A1000	1000mm	-
8	**A857924...**	600mm	-
	A857937...	700mm	-
	A857938...	800mm	-
	A857939...	1000mm	-

Victoria-N

Mueble base de tres cajones / Three drawers vanity unit

UNIK VICTORIA-N: MUEBLE BASE 3 CAJONES CON LAVABO Base unit 3 drawers with washbasin	
A852104...	1200 mm

PACK VICTORIA-N: UNIK 3 CAJONES + ESPEJO + LUMINARIA 3 drawers unik + mirror + lighting	
A852114...	1200 mm

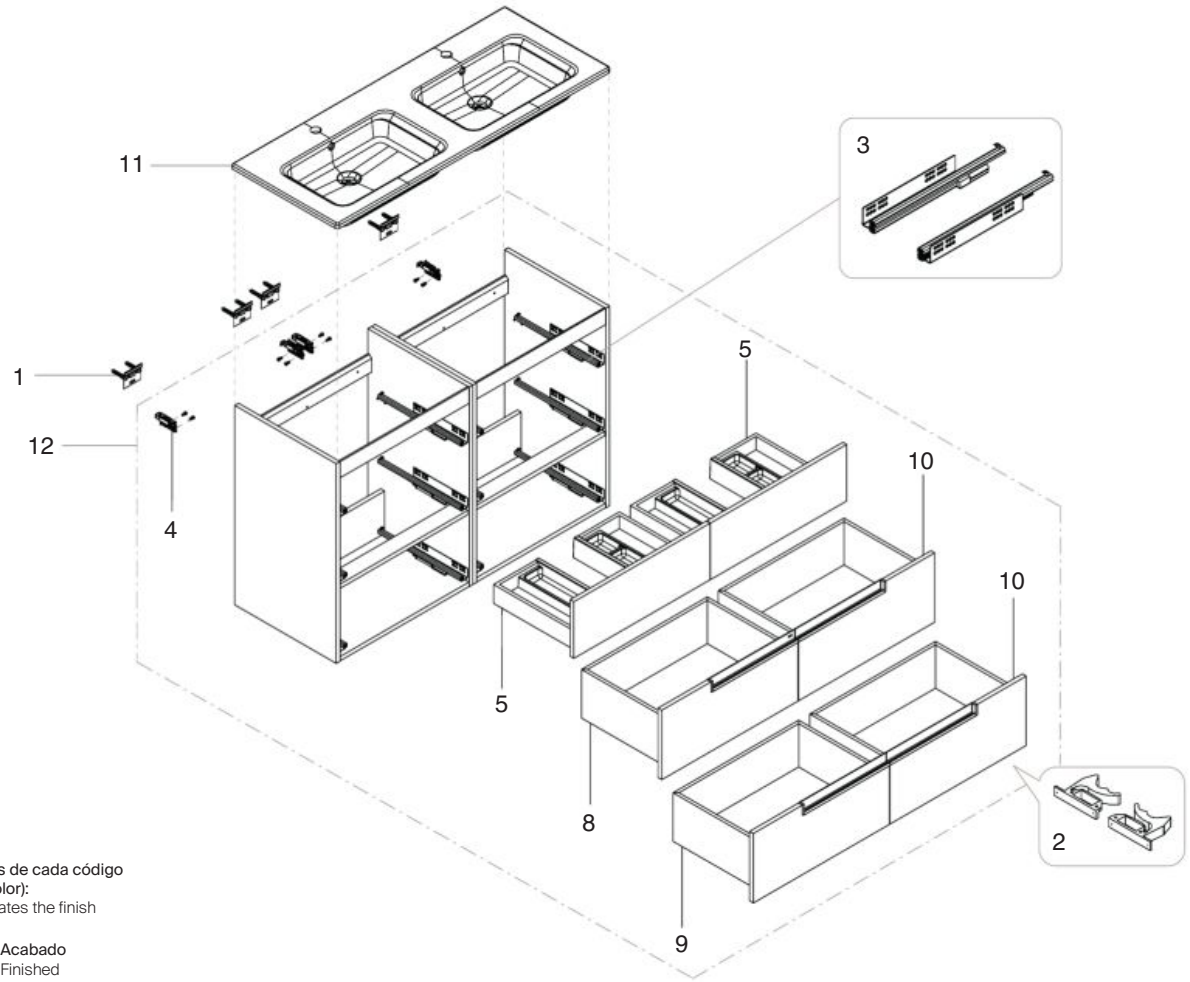

Las últimas posiciones de cada código indican el acabado (color):
The last positions indicates the finish (colour):

Producto Product	Recambio Spare part	Acabado Finished
AD		
509	**MW**	**Blanco mate /** Matt white
531	**OX**	**Onix /** Onyx
564	**SV**	**Verde salvia /** Sage green
541	**LA**	**Fresno claro /** Light ash
517	**WL**	**Nogal /** Walnut

				€
1	2 un	**AU0013300R**		15,80
2		**AU0017300R**		4,68
3		**AU0038500R**		20,50
4		**AU0114400R**		9,60
5		**AU01126MWR**	600 mm	150,00
		AU01126OXR		150,00
		AU01126SVR		143,00
		AU01126LAR		144,00
		AU01126WLR		144,00
8		**AU01135MWR**	600 mm	124,00
		AU01135OXR		124,00
		AU01135SVR		117,00
		AU01135LAR		118,00
		AU01135WLR		117,00

				€
9		**AU01136MWR**	600 mm	121,00
		AU01136OXR		121,00
		AU01136SVR		113,00
		AU01136LAR		115,00
		AU01136WLR		114,00
10		**AU01137MWR**	600 mm	121,00
		AU01137OXR		121,00
		AU01137SVR		113,00
		AU01137LAR		115,00
		AU01137WLR		114,00

Producto acabado compatible:
Finished product compatible:

			€
11	**A3279A0000**	1200mm	-
12	**A857924...**	600mm DCH/RH	-
	A857925...	600mm IZQ/LH	-

Victoria (Old)

Atención: Para sustituir los cajones antiguos (versiones A/B) por uno nuevo (versión C), será necesario cambiar también las guías y los enganches del cajón. Ver recambios marcados con (*), consultar la trazabilidad en la tabla de recambios.

Warning: To replace the old drawers (B version) with a new one (C version),you must also change the guides and drawer catches. See spare parts with (*), check traceability in spare parts table.

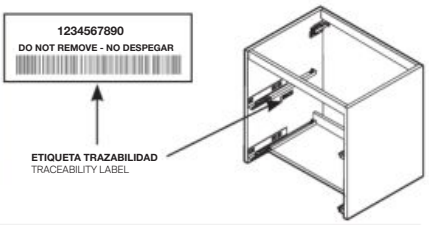

Mueble base de dos cajones / Two drawers vanity unit

A855844...	Pack	600 mm
A855834...	Unik	
A856672...	Vanity Unit	
A855843...	Pack	700 mm
A855833...	Unik	
A856671...	Vanity Unit	
A855842...	Pack	800 mm
A855832...	Unik	
A856670...	Vanity Unit	
A855828...	Pack	900 mm
A855826...	Unik	
A856678...	Vanity Unit	
A855841...	Pack	1000 mm
A855831...	Unik	
A856669...	Vanity Unit	
A855840...	Pack	1200 mm
A855830...	Unik	
A856668...	Vanity Unit	

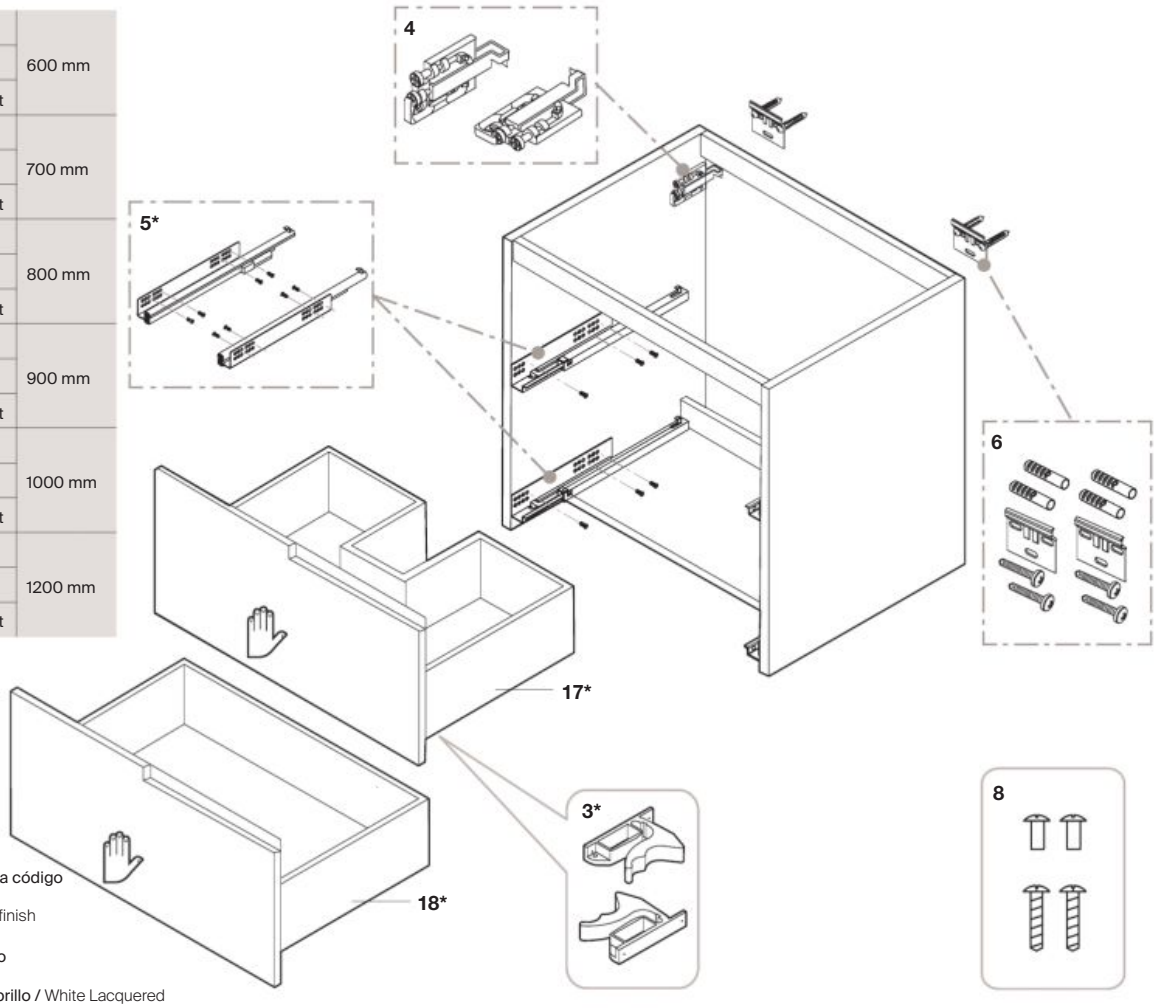

Las últimas posiciones de cada código indican el acabado (color):
The last positions indicates the finish (colour):

Producto / Product	Recambio / Spare part	Acabado / Finished
806	**WH**	**Blanco brillo /** White Lacquered
154	**WE**	**Wengé**
155	**OA**	**Roble /** Urban Oak
153	**GA**	**Gris antracita /** Grey Anthracite

				€
17*	**AU00360WHR**	600mm	C	121,00
	AU00360WER			99,70
	AU00360OAR			110,00
	AU00360GAR			128,00
	AU00387WHR	600mm	C	113,00
	AU00387WER			93,00
	AU00387OAR			107,00
	AU00387GAR			118,00
	AU00362WHR	700mm	C	123,00
	AU00362WER			99,70
	AU00362OAR			116,00
	AU00362GAR			128,00
	AU00364WHR	800mm	C	134,00
	AU00364WER			106,00
	AU00364OAR			137,00
	AU00364GAR			138,00
	AU00366WHR	900mm	C	183,00
	AU00366WER			190,00
	AU00366OAR			190,00
	AU00366GAR			190,00
	AU00368WHR	1000mm	C	146,00
	AU00368WER			113,00
	AU00368OAR			129,00
	AU00368GAR			153,00

				€
18*	**AU00361WHR**	600mm	C	104,00
	AU00361WER			83,00
	AU00361OAR			97,70
	AU00361GAR			109,00
	AU00386WHR	600mm	C	97,70
	AU00386WER			80,30
	AU00386OAR			94,50
	AU00386GAR			105,00
	AU00363WHR	700mm	C	110,00
	AU00363WER			131,00
	AU00363OAR			103,00
	AU00363GAR			115,00
	AU00365WHR	800mm	C	123,00
	AU00365WER			96,80
	AU00365OAR			116,00
	AU00365GAR			129,00
	AU00367WHR	900mm	C	170,00
	AU00367WER			178,00
	AU00367OAR			177,00
	AU00367GAR			177,00
	AU00369WHR	1000mm	C	134,00
	AU00369WER			101,00
	AU00369OAR			124,00
	AU00369GAR			140,00

			€
3*+	**AU0017300R**	C	4,68
4+	**AU0004900R**	A/B/C	10,50
5*+	**AU0038500R**	C	20,50
6	**AU0013300R**	A/B/C	15,80
8	**AU0010100R**	A/B/C	5,20

Victoria (Old)

Atención: Para sustituir los cajones antiguos (versiones A/B) por uno nuevo (versión C), será necesario cambiar también las guías y los enganches del cajón. Ver recambios marcados con (*), consultar la trazabilidad en la tabla de recambios.

Warning: To replace the old drawers (B version) with a new one (C version), you must also change the guides and drawer catches. See spare parts with (*), check traceability in spare parts table.

Mueble base de dos cajones / Two drawers vanity unit

MODELO	TRAZABILIDAD Traceability		5*	3*	17 *	18 *
600	B	**ANTERIOR A before 2219674000**	**AU0005000R**	**AU0004800R**	**AU00360..R + AU0038500R + AU0017300R**	**AU00361..R + AU0038500R + AU0017300R**
	C	**POSTERIOR A after 2219674000**	**AU0038500R**	**AU0017300R**	**AU00360WHR / AU00360WER / AU00360GAR / AU00360OAR**	**AU00361WHR / AU00361WER / AU00361GAR / AU00361OAR**
600	B	**ANTERIOR A before 2219674000**	**AU0005000R**	**AU0004800R**	**AU00387..R + AU0038500R + AU0017300R**	**AU00386..R + AU0038500R + AU0017300R**
	C	**POSTERIOR A after 2219674000**	**AU0038500R**	**AU0017300R**	**AU00387WHR / AU00387WER / AU00387GAR / AU00387OAR**	**AU00386WHR / AU00386WER / AU00386GAR / AU00386OAR**
700	B	**ANTERIOR A before 2219726000**	**AU0005000R**	**AU0004800R**	**AU00362..R + AU0038500R + AU0017300R**	**AU00363..R + AU0038500R + AU0017300R**
	C	**POSTERIOR A after 2219726000**	**AU0038500R**	**AU0017300R**	**AU00362WHR / AU00362WER / AU00362GAR / AU00362OAR**	**AU00363WHR / AU00363WER / AU00363GAR / AU00363OAR**
800	B	**ANTERIOR A before 2219669000**	**AU0005000R**	**AU0004800R**	**AU00364..R + AU0038500R + AU0017300R**	**AU00365..R + AU0038500R + AU0017300R**
	C	**POSTERIOR A after 2219669000**	**AU0038500R**	**AU0017300R**	**AU00364WHR / AU00364WER / AU00364GAR / AU00364OAR**	**AU00365WHR / AU00365WER / AU00365GAR / AU00365OAR**
900	B	**ANTERIOR A before 2220001000**	**AU0005000R**	**AU0004800R**	**AU00366..R + AU0038500R + AU0017300R**	**AU00367..R + AU0038500R + AU0017300R**
	C	**POSTERIOR A after 2220001000**	**AU0038500R**	**AU0017300R**	**AU00366WHR / AU00366WER / AU00366GAR / AU00366OAR**	**AU00367WHR / AU00367WER / AU00367GAR / AU00367OAR**
1000	B	**ANTERIOR A before 2216704000**	**AU0005000R**	**AU0004800R**	**AU00368..R + AU0038500R + AU0017300R**	**AU00369..R + AU0038500R + AU0017300R**
	C	**POSTERIOR A after 2216704000**	**AU0038500R**	**AU0017300R**	**AU00368WHR / AU00368WER / AU00368GAR / AU00368OAR**	**AU00369WHR / AU00369WER / AU00369GAR / AU00369OAR**

Victoria (Old)

Atención: Para sustituir los cajones antiguos (versiones A/B) por uno nuevo (versión C), será necesario cambiar también las guías y los enganches del cajón. Ver recambios marcados con (*), consultar la trazabilidad en la tabla de recambios.

Warning: To replace the old drawers (B version) with a new one (C version),you must also change the guides and drawer catches. See spare parts with (*), check traceability in spare parts table.



Mueble base de tres cajones / Three drawers vanity unit

A855849...	Pack	600 mm
A855839...	Unik	
A856677...	Vanity Unit	
A855848...	Pack	700 mm
A855838...	Unik	
A856676...	Vanity Unit	
A855847...	Pack	800 mm
A855837...	Unik	
A856675...	Vanity Unit	
A855829...	Pack	900 mm
A855827...	Unik	
A856679...	Vanity Unit	
A855846...	Pack	1000 mm
A855836...	Unik	
A856674...	Vanity Unit	
A855845...	Pack	1200 mm
A855835...	Unik	
A856673...	Vanity Unit	

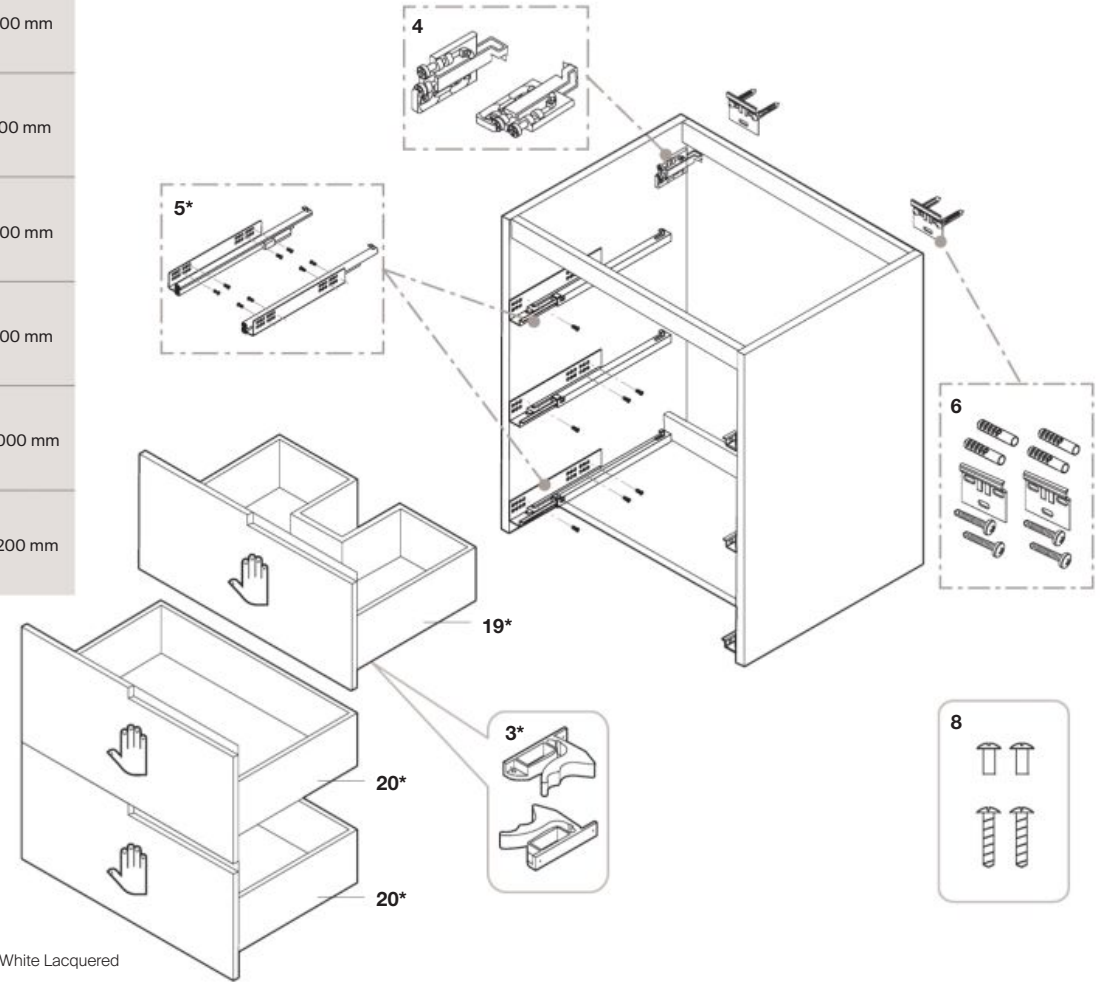

Las últimas posiciones de cada código indican el acabado (color):
The last positions indicates the finish (colour):

Producto Product	Recambio Spare part	Acabado Finished
806	**WH**	**Blanco brillo /** White Lacquered
154	**WE**	**Wengé**
155	**OA**	**Roble /** Urban Oak
153	**GA**	**Gris antracita /** Grey Anthracite

					€
19*	**AU00370WHR**	600mm	C		115,00
	AU00370WER				N.D.
	AU00370OAR				122,00
	AU00370GAR				122,00
	AU00388WHR	600mm	C		115,00
	AU00388WER				95,20
	AU00388OAR				108,00
	AU00388GAR				118,00
	AU00355WHR	700mm	C		121,00
	AU00355WER				98,80
	AU00355OAR				114,00
	AU00355GAR				125,00
	AU00357WHR	800mm	C		131,00
	AU00357WER				106,00
	AU00357OAR				124,00
	AU00357GAR				136,00
	AU00399WHR	900mm	C		182,00
	AU00399WER				187,00
	AU00399OAR				187,00
	AU00399GAR				188,00
	AU00401WHR	1000mm	C		143,00
	AU00401WER				118,00
	AU00401OAR				135,00
	AU00401GAR				143,00

					€
20*	**AU00371WHR**	600mm	C		102,00
	AU00371WER				82,70
	AU00371OAR				95,30
	AU00371GAR				106,00
	AU00356WHR	600mm	C		102,00
	AU00356WER				82,70
	AU00356OAR				95,30
	AU00356GAR				106,00
	AU00358WHR	700mm	C		107,00
	AU00358WER				86,00
	AU00358OAR				101,00
	AU00358GAR				112,00
	AU00398WHR	800mm	C		122,00
	AU00398WER				96,80
	AU00398OAR				114,00
	AU00398GAR				127,00
	AU00400WHR	900mm	C		165,00
	AU00400WER				173,00
	AU00400OAR				172,00
	AU00400GAR				173,00
	AU00402WHR	1000mm	C		131,00
	AU00402WER				100,00
	AU00402OAR				122,00
	AU00402GAR				137,00

				€
3*	+	**AU0017300R**	C	4,68
4	+	**AU0004900R**	A/B/C	10,50
5*	+	**AU0038500R**	C	20,50
6		**AU0013300R**	A/B/C	15,80
8		**AU0010100R**	A/B/C	5,20

Victoria (Old)

Atención: Para sustituir los cajones antiguos (versiones A/B) por uno nuevo (versión C), será necesario cambiar también las guías y los enganches del cajón. Ver recambios marcados con (*), consultar la trazabilidad en la tabla de recambios.

Warning: To replace the old drawers (B version) with a new one (C version),you must also change the guides and drawer catches. See spare parts with (*), check traceability in spare parts table.

Mueble base de tres cajones / Three drawers vanity unit

MODELO	TRAZABILIDAD Traceability		5*	3*	19 *	20 *
600	B	ANTERIOR A before 2219674000	AU0005000R	AU0004800R	AU00370..R + AU0038500R + AU0017300R	AU00371..R + AU0038500R + AU0017300R
	C	POSTERIOR A after 2219674000	AU0038500R	AU0017300R	AU00370WHR / AU00370WER / AU00370GAR / AU00370OAR	AU00371WHR / AU00371WER / AU00371GAR / AU00371OAR
600	B	ANTERIOR A before 2219674000	AU0005000R	AU0004800R	AU00388..R + AU0038500R + AU0017300R	AU00356..R + AU0038500R + AU0017300R
	C	POSTERIOR A after 2219674000	AU0038500R	AU0017300R	AU00388WHR / AU00388WER / AU00388GAR / AU00388OAR	AU00356WHR / AU00356WER / AU00356GAR / AU00356OAR
700	B	ANTERIOR A before 2219726000	AU0005000R	AU0004800R	AU00355..R + AU0038500R + AU0017300R	AU00358..R + AU0038500R + AU0017300R
	C	POSTERIOR A after 2219726000	AU0038500R	AU0017300R	AU00355WHR / AU00355WER / AU00355GAR / AU00355OAR	AU00358WHR / AU00358WER / AU00358GAR / AU00358OAR
800	B	ANTERIOR A before 2219669000	AU0005000R	AU0004800R	AU00357..R + AU0038500R + AU0017300R	AU00398..R + AU0038500R + AU0017300R
	C	POSTERIOR A after 2219669000	AU0038500R	AU0017300R	AU00357WHR AU00357WER / AU00357GAR / AU00357OAR	AU00398WHR / AU00398WER / AU00398GAR / AU00398OAR
900	B	ANTERIOR A before 2220001000	AU0005000R	AU0004800R	AU00399..R + AU0038500R + AU0017300R	AU00400..R + AU0038500R + AU0017300R
	C	POSTERIOR A after 2220001000	AU0038500R	AU0017300R	AU00399WHR / AU00399WER / AU00399GAR / AU00399OAR	AU00400WHR / AU00400WER / AU00400GAR / AU00400OAR
1000	B	ANTERIOR A before 2216704000	AU0005000R	AU0004800R	AU00401..R + AU0038500R + AU0017300R	AU00402..R + AU0038500R + AU0017300R
	C	POSTERIOR A after 2216704000	AU0038500R	AU0017300R	AU00401WHR / AU00401WER / AU00401GAR / AU00401OAR	AU00402WHR / AU00402WER / AU00402GAR / AU00402OAR

Victoria (Old)

Columnas / Columns

A856660...		1500 mm
A856661...		1100 mm
A856662...		1100 mm

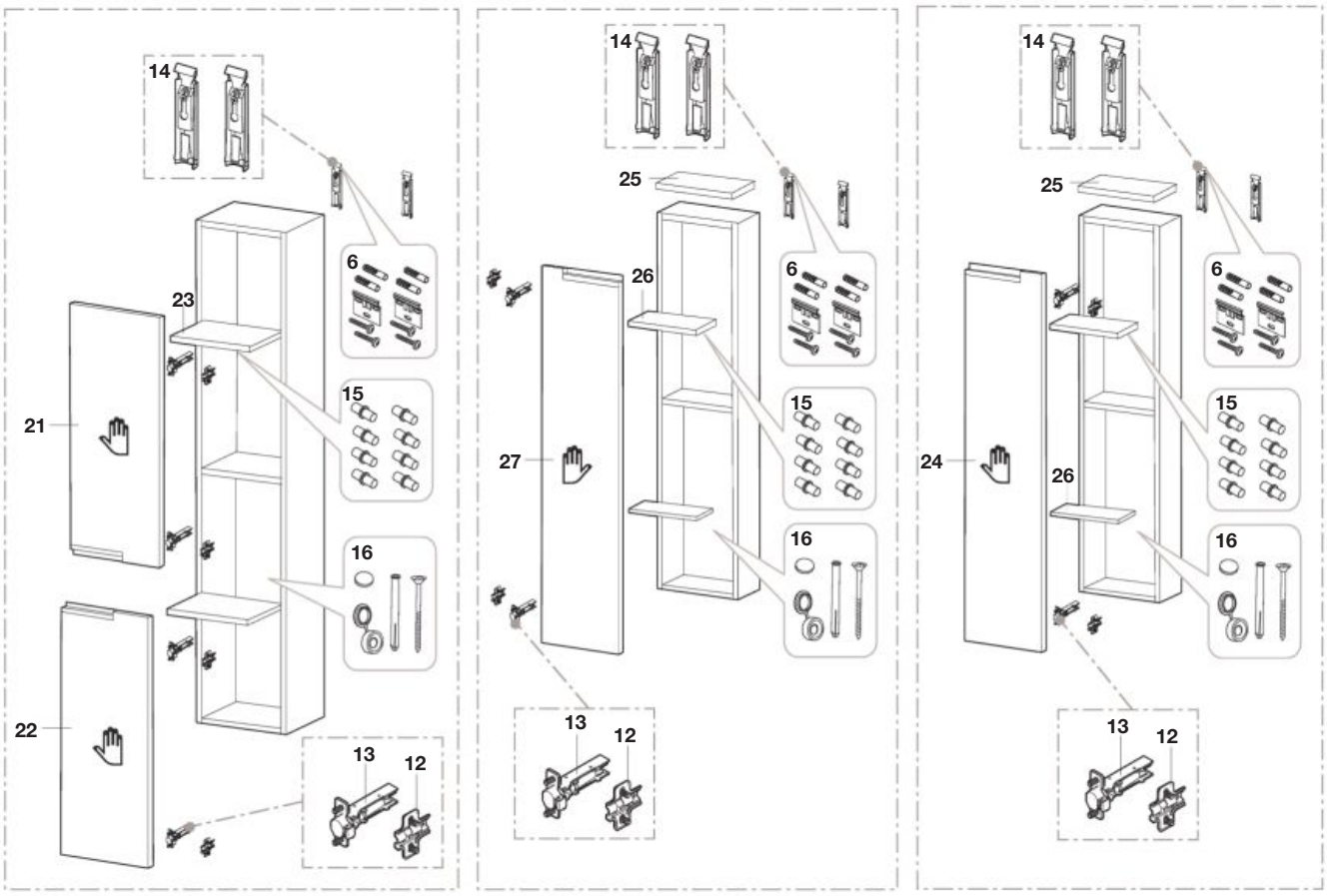

Las últimas posiciones de cada código indican el acabado (color):
The last positions indicates the finish (colour):

Producto	Recambio	Acabado
Product	Spare part	Finished
806	**WH**	**Blanco brillo /** White Lacquered
154	**WE**	Wengé
155	**OA**	Roble / Urban Oak
153	**GA**	Gris antracita / Grey Anthracite

				€
6		**AU0013300R**		15,80
12		**AU0011800R**		6,98
13		**AU0011900R**		14,30
14		**AU0004000R**		10,50
15		**AU0004100R**		5,23
16	4 un	**AU0004200R**		10,50
21		**AU0009406R**		N.D.
		AU0009454R	1500mm	38,80
		AU0009455R		N.D.
		AU0009453R		N.D.
22		**AU0009506R**		N.D.
		AU0009554R	1500mm	N.D.
		AU0009555R		N.D.
		AU0009553R		N.D.
23		**AU00037WHR**		15,00
		AU0009654R		N.D.
		AU0009655R	1500mm	15,70
		AU0009653R		15,70

			€
24	**AU0009006R**		65,80
	AU0009054R	1100mm	N.D.
	AU0009055R		N.D.
	AU0009053R		73,20
25	**AU0009106R**		13,00
	AU0009154R	1100mm	13,00
	AU0009155R		N.D.
	AU0009153R		N.D.
26	**AU0009206R**		N.D.
	AU0009254R	1100mm	N.D.
	AU0009255R		N.D.
	AU0009253R		N.D.
27	**AU0009306R**		N.D.
	AU0009354R	1100mm	N.D.
	AU0009355R		N.D.
	AU0009353R		N.D.

Victoria

Mueble base de dos cajones con lavabo / Two drawers vanity unit with washbasin

UNIK VICTORIA: MUEBLE BASE 2 CAJONES CON LAVABO Base unit 2 drawers with washbasin	
A851592...	600 mm
A851593...	700 mm
A851594...	800 mm
A851595...	1000 mm
A851599...	1200 mm

PACK VICTORIA: UNIK VICTORIA 2 CAJONES + ESPEJO Unik Victoria 2 drawers + mirror	
A851602...	600 mm
A851603...	700 mm
A851604...	800 mm
A851605...	1000 mm
A851606...	1200 mm

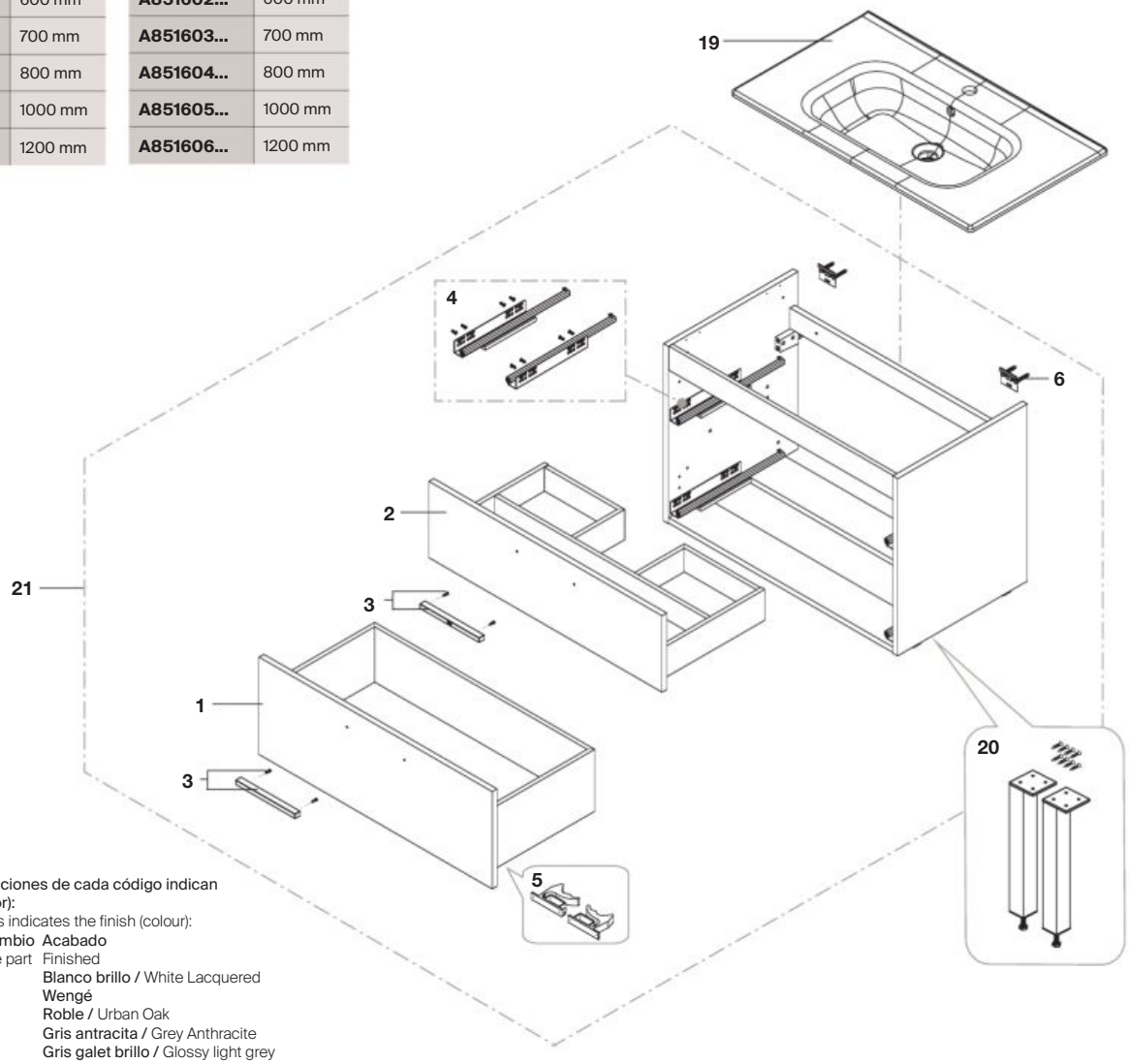

Las últimas posiciones de cada código indican el acabado (color):
The last positions indicates the finish (colour):

Producto Product	Recambio Spare part	Acabado Finished
806	**WH**	**Blanco brillo /** White Lacquered
154	**WE**	**Wengé**
155	**OA**	**Roble /** Urban Oak
153	**GA**	**Gris antracita /** Grey Anthracite
516	**GLR**	**Gris galet brillo /** Glossy light grey
517	**WLR**	**Nogal /** Walnut

				€
1		**AU00780WHR**	600mm	62,20
		AU00780ASR	600mm	66,80
		AU00780OAR	600mm	66,50
		AU00780GAR	600mm	65,70
		AU00781WHR	700mm	66,70
		AU00781ASR	700mm	72,50
		AU00781OAR	700mm	71,80
		AU00781GAR	700mm	70,30
		AU00782WHR	800mm	78,30
		AU00782ASR	800mm	77,50
		AU00782OAR	800mm	77,20
		AU00782GAR	800mm	75,50
		AU00783WHR	1000mm	91,50
		AU00783ASR	1000mm	102,00
		AU00783OAR	1000mm	87,70
		AU00783GAR	1000mm	85,70

				€
2		**AU00779WHR**	600mm	69,00
		AU00779ASR	600mm	71,80
		AU00779OAR	600mm	71,70
		AU00779GAR	600mm	71,80
		AU00785WHR	700mm	73,70
		AU00785ASR	700mm	76,80
		AU00785OAR	700mm	76,30
		AU00785GAR	700mm	76,80
		AU00786WHR	800mm	78,50
		AU00786ASR	800mm	82,70
		AU00786OAR	800mm	82,30
		AU00786GAR	800mm	82,30
		AU00787WHR	1000mm	83,70
		AU00787ASR	1000mm	89,70
		AU00787OAR	1000mm	89,20
		AU00787GAR	1000mm	88,30
3	2 un	**AU0078800R**		54,70

			€
4		**AU0038500R**	20,50
5		**AU0017300R**	4,68
6	2 un	**AU0013300R**	15,80

Producto acabado compatible:
Finished product compatible:

			€
19	**A32799E000**	600mm	-
	A32799D000	700mm	-
	A32799C000	800mm	-
	A32799B000	1000mm	-
	A32799A000	1200mm	-
20	**A816826339**		-
21	**A857468...**	600mm	-
	A857469...	700mm	-
	A857470..	800mm	-
	A857471..	1000mm	-

Victoria

Mueble base de tres cajones con lavabo / Three drawers vanity unit with washbasin

UNIK VICTORIA: MUEBLE BASE 3 CAJONES CON LAVABO Base unit 3 drawers with washbasin	
A851596...	600 mm
A851597...	800 mm
A851601...	1200 mm

PACK VICTORIA: UNIK VICTORIA 3 CAJONES + ESPEJO Unik Victoria 3 drawers + mirror	
A851607...	600 mm
A851608...	800 mm
A851609...	1200 mm

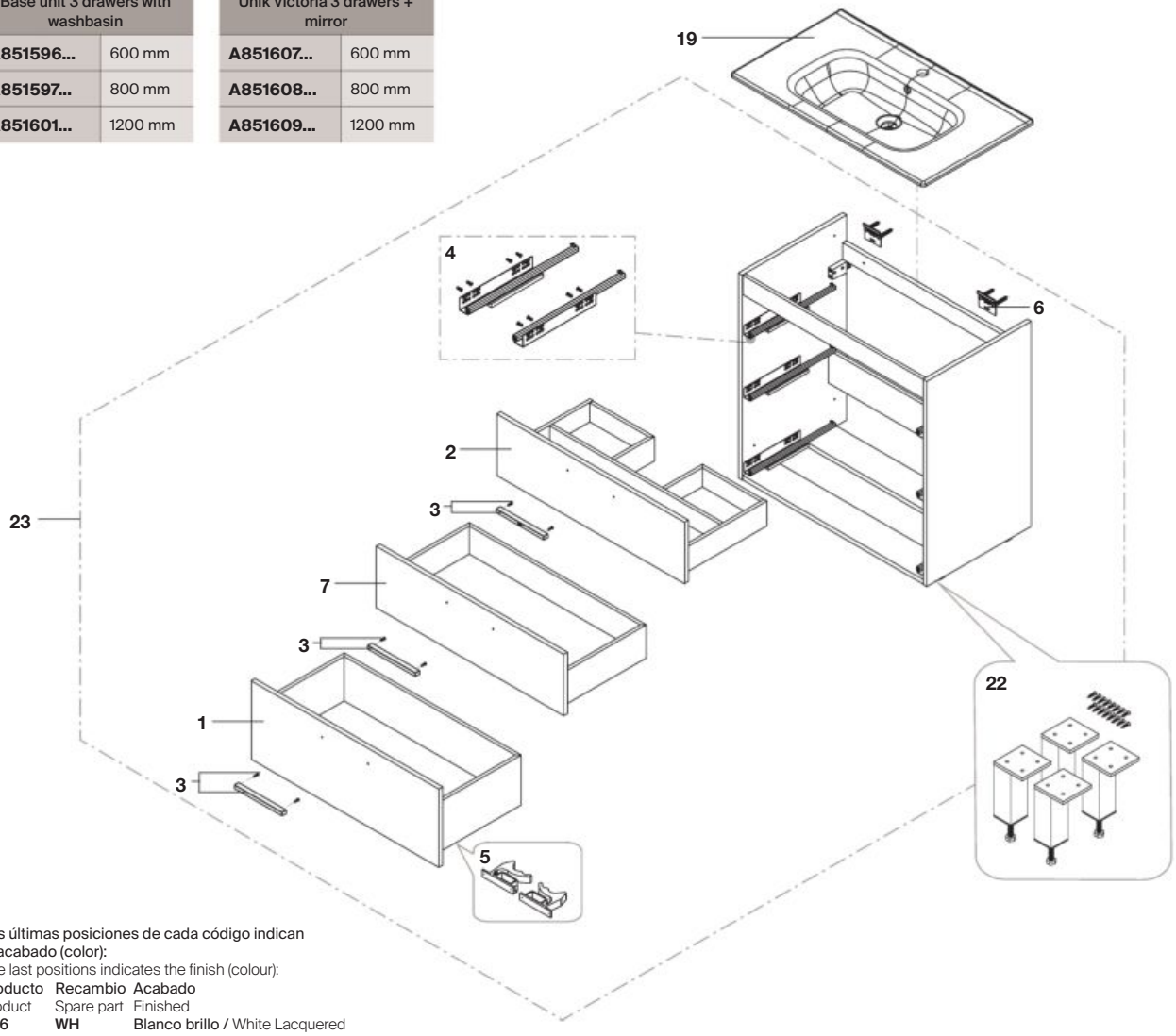

Las últimas posiciones de cada código indican el acabado (color):
The last positions indicates the finish (colour):

Producto Product	Recambio Spare part	Acabado Finished
806	**WH**	**Blanco brillo /** White Lacquered
154	**WE**	**Wengé**
155	**OA**	**Roble /** Urban Oak
153	**GA**	**Gris antracita /** Grey Anthracite
516	**GLR**	**Gris galet brillo /** Glossy light grey
517	**WLR**	**Nogal /** Walnut

			€
1	**AU00780WHR**	600mm	62,20
	AU00780ASR	600mm	66,80
	AU00780OAR	600mm	66,50
	AU00780GAR	600mm	65,70
	AU00782WHR	800mm	78,30
	AU00782ASR	800mm	77,50
	AU00782OAR	800mm	77,20
	AU00782GAR	800mm	75,50
2	**AU00779WHR**	600mm	69,00
	AU00779ASR	600mm	71,80
	AU00779OAR	600mm	71,70
	AU00779GAR	600mm	71,80
	AU00786WHR	800mm	78,50
	AU00786ASR	800mm	82,70
	AU00786OAR	800mm	82,30
	AU00786GAR	800mm	82,30

			€
3 2 un	**AU0078800R**		54,70
4	**AU0038500R**		20,50
5	**AU0017300R**		4,68
6 2 un	**AU0013300R**		15,80
7	**AU00789WHR**	600mm	57,50
	AU00789ASR	600mm	60,30
	AU00789OAR	600mm	60,20
	AU00789GAR	600mm	60,30
	AU00790WHR	800mm	65,00
	AU00790ASR	800mm	69,50
	AU00790OAR	800mm	68,80
	AU00790GAR	800mm	69,00

Producto acabado compatible:
Finished product compatible:

			€
19	**A32799E000**	600mm	-
	A32799C000	800mm	-
	A32799A000	1200mm	-
22	**A816827339**		-
23	**A857472...**	600mm	-
	A857473...	800mm	-

Victoria

Mueble base de dos puertas con lavabo / Two doors vanity unit with washbasin

UNIK VICTORIA: MUEBLE BASE 2 PUERTAS CON LAVABO Base unit 2 doors with washbasin	
A851650..	600 mm
A851654...	800 mm

PACK VICTORIA: UNIK VICTORIA 2 PUERTAS + ESPEJO Unik Victoria 2 doors + mirror	
A851658...	600 mm
A851662..	800 mm

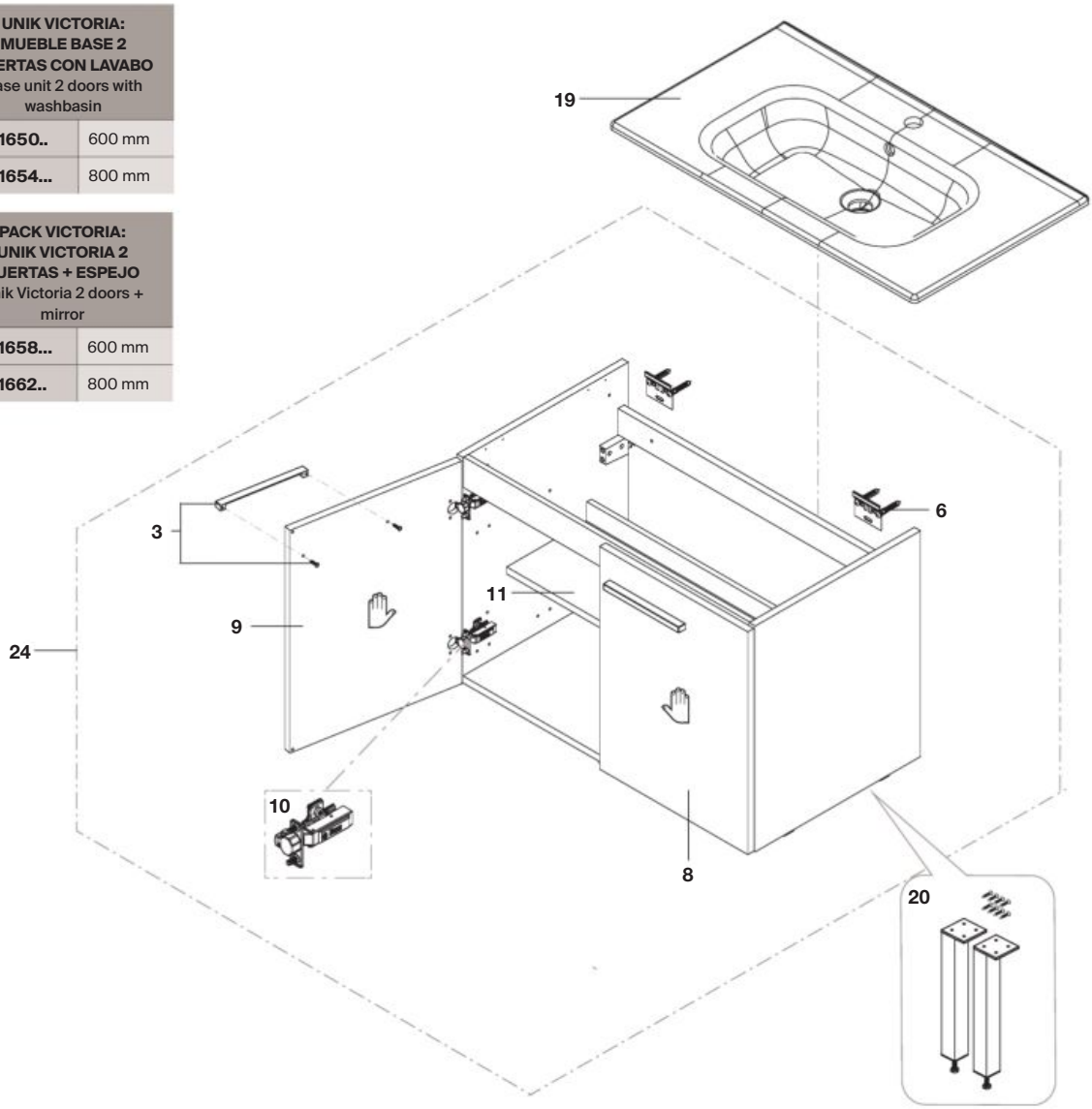

				€
3	2 un	**AU0078800R**		54,70
6	2 un	**AU0013300R**		15,80
8		**AU00791WHR**	600mm	31,20
		AU00791ASR	600mm	31,50
		AU00791OAR	600mm	31,30
		AU00791GAR	600mm	34,80
		AU00792WHR	800mm	36,00
		AU00792ASR	800mm	36,20
		AU00792OAR	800mm	35,70
		AU00792GAR	800mm	40,70
9		**AU00793WHR**	600mm	31,20
		AU00793ASR	600mm	31,50
		AU00793OAR	600mm	29,50
		AU00793GAR	600mm	34,80
		AU00794WHR	800mm	36,00
		AU00794ASR	800mm	36,20
		AU00794OAR	800mm	35,70
		AU00794GAR	800mm	40,70

				€
10	2 un	**AU0089500R**		18,00
11		**AU00795WHR**	600mm	6,18
		AU00795ASR	600mm	6,18
		AU00795OAR	600mm	6,18
		AU00795GAR	600mm	6,18
		AU00796WHR	800mm	6,18
		AU00796ASR	800mm	5,98
		AU00796OAR	800mm	6,18
		AU00796GAR	800mm	6,18

Las últimas posiciones de cada código indican el acabado (color):
The last positions indicates the finish (colour):

Producto Product	Recambio Spare part	Acabado Finished
806	**WH**	**Blanco brillo /** White Lacquered
154	**WE**	Wengé
155	**OA**	**Roble /** Urban Oak
153	**GA**	**Gris antracita /** Grey Anthracite
516	**GLR**	**Gris galet brillo /** Glossy light grey
517	**WLR**	**Nogal /** Walnut

Producto acabado compatible:
Finished product compatible:

			€
19	**A32799E000**	600mm	-
	A32799C000	800mm	-
20	**A816826339**		-
24	**A857556...**	600mm	-
	A857560...	800mm	-

Victoria

Espejo / Mirror

ESPEJO VICTORIA: Mirror victoria	
A812331406	600 mm
A812332406	700 mm
A812333406	800 mm
A812334406	900 mm
A812335406	1000 mm
A812336406	1200 mm

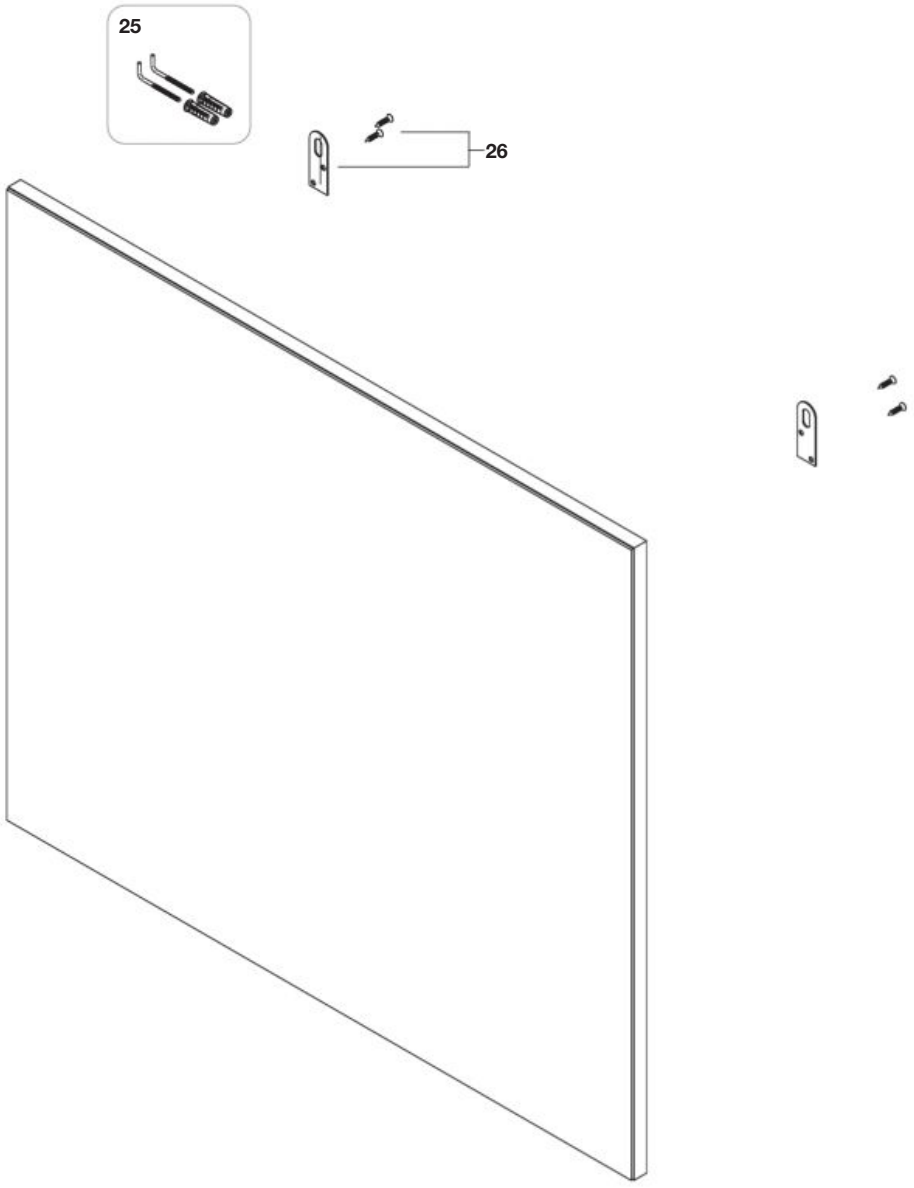

			€
25		**AU0005200R**	5,23
26	2 un	**AU0004500R**	5,23

Victoria

Taza compacta para tanque bajo rimless salida dual /
Close-coupled back-to-wall WC pan rimless with dual outlet

A34DV09000	Pack Inferior / Bottom pack
A34DV08000	Pack Lateral / Side pack
A342V05000	Taza / Bowl

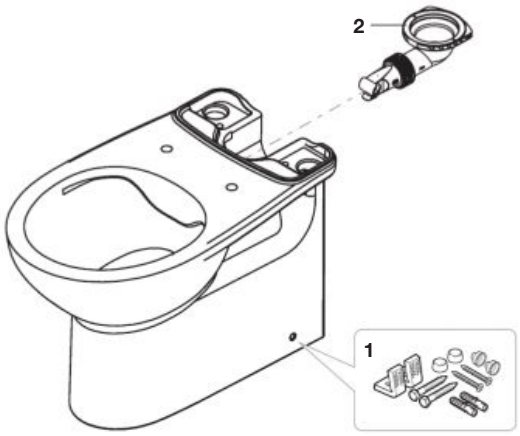

		€
1	**AV0009400R**	6,16
2	**AV0063700R**	4,05
4	**AV0007700R**	14,60
5	**AV0009300R**	42,70
6	**AV0007900R**	14,60
7	**AV0035400R**	4,80

ADMITE / Admits

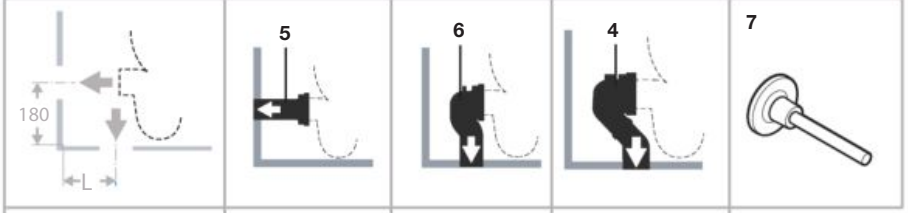

L=	165	150	210

Tanque doble descarga / Cistern dual flush

A341V01000	Inferior / Bottom
A341V00000	Lateral / Side
A341V04000	Lateral / Side
A34DV08000	Lateral / Side
A34DV09000	Inferior / Bottom
A34PV04000	Lateral / Side
A34PV06000	Lateral / Side

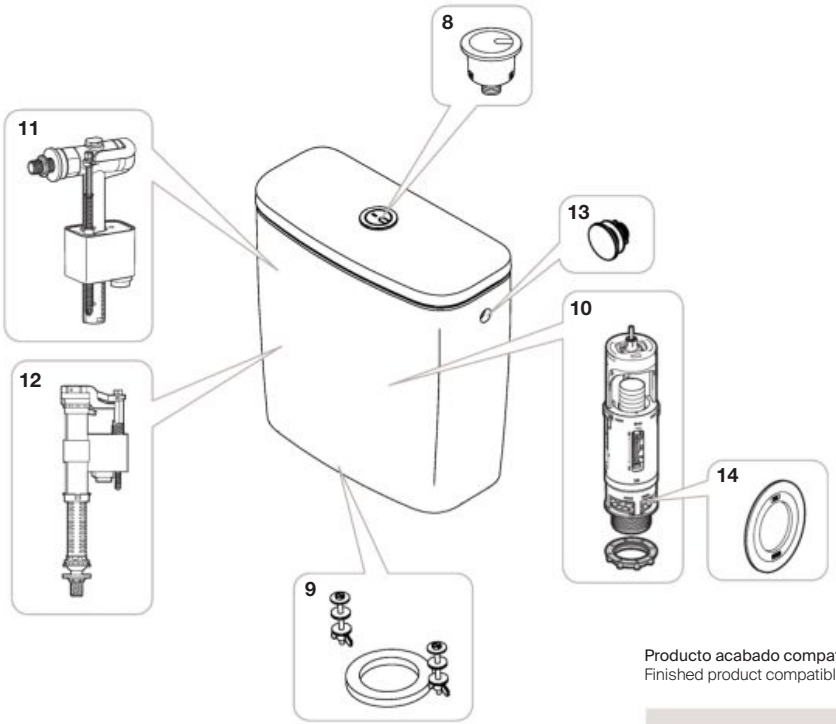

		€
8	**AH0011200R**	14,50
9	**AV0021700R**	11,50
13	**AV0012600R**	2,54
14	**AH0011400R**	6,42

Producto acabado compatible:
Finished product compatible:

		€
10	**A822505500**	-
11	**A822508800**	-
12	**A822508900**	-

Victoria

Bidé con fijaciones / Bidet with Fixings

A355V04000



		€
1	**AV0009400R**	6,16
15	**AV00518[illegible]0R**	37 10

ADMITE / Admits

15

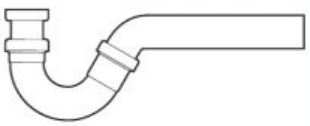

Taza suspendia rimless / Wall-hung bowl rimless

A346V03000	
A34HV00000	Pack

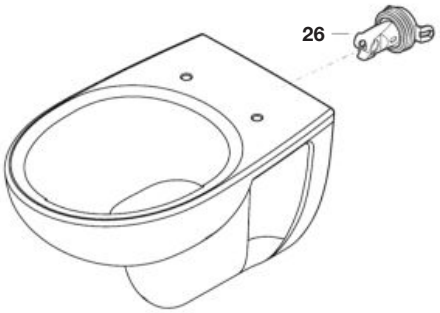

		€
20	**AV0007800R**	8,11
26	**AV0066800R**	2,35

ADMITE / Admits

20

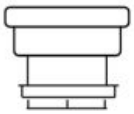

Taza tanque bajo rimless salida horizontal / Close-coupled rimless WC horizontal outlet

A342V03000	Taza salida horizontal / Horizontal outlet bowl
A34PV04000	Pack Horizontal / Horizontal Pack
A34PV06000	Pack Horizontal / Horizontal Pack



		€
1	**AV0009400R**	6,16
6	**AV0007900R**	14,60
7	**AV0035400R**	4,80
25	**AV0069100R**	17,10
30	**A890805400**	33,70
31	**AV0007000R**	46,10
20	**AV0007800R**	8,11

ADMITE / Admits

	30	6	31	7
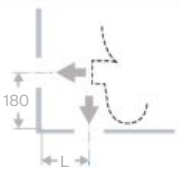	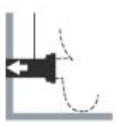	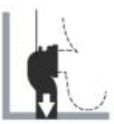		
L=	140	130	Min. 95 - Max. 135	

Victoria

Taza tanque bajo rimless salida vertical / Close-coupled rimless WC vertical outlet

A342V04000

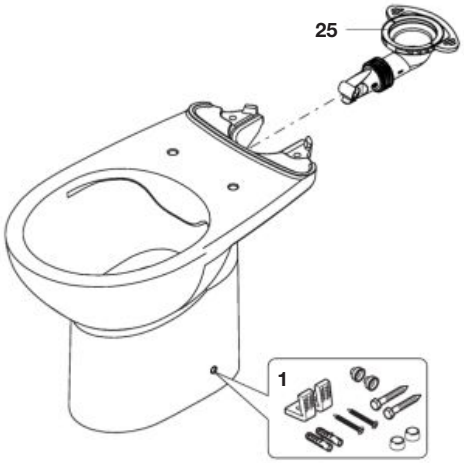

ADMITE / Admits



L= 210

		€
1	**AV0009400R**	6,16
6	**AV0007900R**	14,60
7	**AV0035400R**	4,80
25	**AV0069100R**	17,10
30	**A890805400**	33,70
31	**AV0007000R**	46,10
20	**AV0007800R**	8,11

Taza compacta para tanque bajo Rimless / Close-coupled back-to-wall WC pan rimless

A344V03000	Salida horizontal / Horizontal outlet
A344V04000	Salida vertical / Vertical outlet

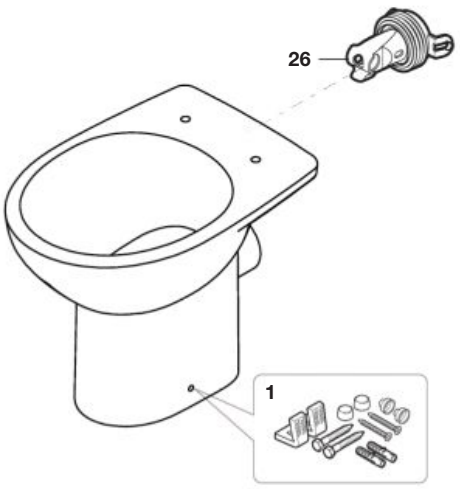

ADMITE / Admits

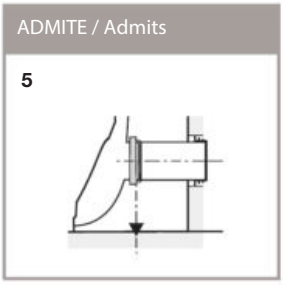

		€
1	**AV0009400R**	6,16
5	**AV0009300R**	42,70
26	**AV0066800R**	2,35

Victoria Original

Atención: Para sustituir los cajones antiguos (versiones A/B) por uno nuevo (versión C), será necesario cambiar también las guías y los enganches del cajón. Ver recambios marcados con (*), consultar la trazabilidad en la tabla de recambios.

Warning: To replace the old drawers (version B) with a new one (C/D versions), you must also change the guides and drawer catches. Check traceability in spare parts table.

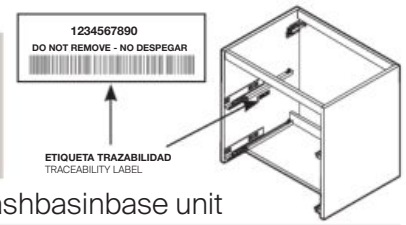

Mueble base de dos cajones con lavabo / Two drawers vanity unit with washbasinbase unit

A855747...	Pack	600 mm
A855749...	Unik	
A856575...	Vanity Unit	
A855748...	Pack	800 mm
A855750...	Unik	
A856576...	Vanity Unit	

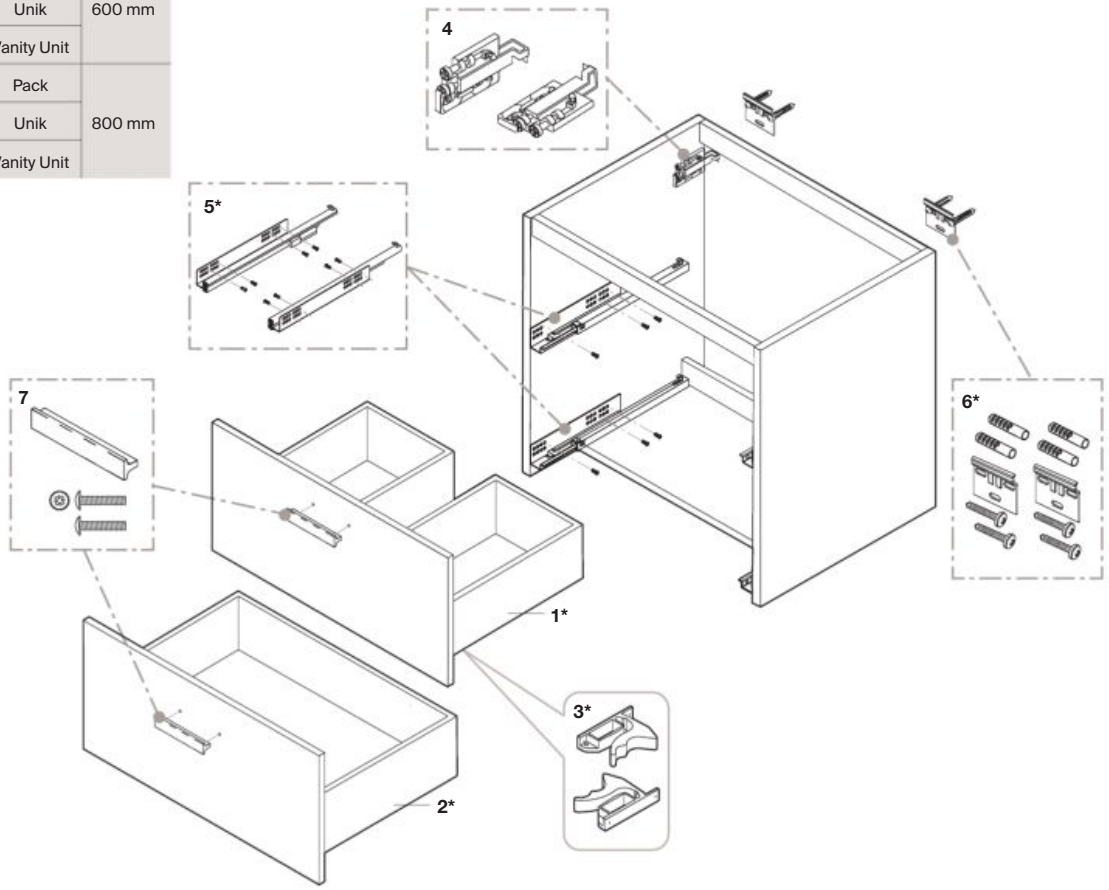

MODELO	TRAZABILIDAD Traceability		5*	3*	1*	2 *
600	A	**ANTERIOR A before 0021493739**	**AU0012100R**	**AU0012000R**	**AU00372..R + AU0038500R + AU0017300R**	**AU00373..R + AU0038500R + AU0017300R**
	B	**ANTERIOR A before 2219674000**	**AU0005000R**	**AU0004800R**		
	C	**POSTERIOR A after 2219674000**	**AU0038500R**	**AU0017300R**	**AU00372WHR / AU00372WAR / AU00372WER**	**AU00373WHR / AU00373WAR / AU00373WER**
800	A	**ANTERIOR A before 0021493739**	**AU0012100R**	**AU0012000R**	**AU00376..R + AU0038500R + AU0017300R**	**AU00377..R + AU0038500R + AU0017300R**
	B	**ANTERIOR A before 2219669000**	**AU0005000R**	**AU0004800R**		
	C	**POSTERIOR A after 2219669000**	**AU0038500R**	**AU0017300R**	**AU00376WHR / AU00376WAR / AU00376WER**	**AU00377WHR / AU00377WAR / AU00377WER**

Las últimas posiciones de cada código indican el acabado (color):
The last positions indicates the finish (colour):

Producto Product	Recambio Spare part	Acabado Finished
806	**WH**	Blanco / White Lacquered
222	**WA**	Nogal / Walnut
221	**WE**	Wengé

					€
1*	**AU00372WHR**	600 mm	C		78,80
	AU00372WAR				75,70
	AU00372WER				N.D.
	AU00376WHR	800 mm	C		92,50
	AU00376WAR				80,20
	AU00376WER				N.D.

					€
2*	**AU00373WHR**	600 mm	C		70,50
	AU00373WAR				66,00
	AU00373WER				N.D.
	AU00377WHR	800 mm	C		85,30
	AU00377WAR				75,70
	AU00377WER				75,70

				€
3*	**AU0017300R**	C		4,68
4	**AU0004900R**	A/B/C		10,50
5*	**AU0038500R**	C		20,50
6	**AU0013300R**	A/B/C		15,80
7	**AU0005100R**	A/B/C		13,90

Victoria Basic

Atención: Para sustituir los cajones antiguos (versiones A/B) por uno nuevo (versión C), será necesario cambiar también las guías y los enganches del cajón. Ver recambios marcados con (*), consultar la trazabilidad en la tabla de recambios.
Warning: To replace the old drawers (version B) with a new one (C/D versions), you must also change the guides and drawer catches. Check traceability in spare parts table.

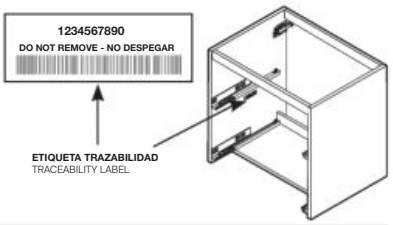

Mueble base de dos cajones / Two drawers vanity unit

A855859...	Pack	600 mm
A855854...	Unik	
A856575...	Vanity Unit	
A855858...	Pack	700 mm
A855853...	Unik	
A856682...	Vanity Unit	
A855857...	Pack	800 mm
A855852...	Unik	
A856576...	Vanity Unit	
A855856...	Pack	1000 mm
A855851...	Unik	
A856681...	Vanity Unit	

Las últimas posiciones de cada código indican el acabado (color):
The last positions indicates the finish (colour):

Producto Product	Recambio Spare part	Acabado Finished
806	WH	Blanco / White
222	WA	Nogal / Walnut
221	WE	Wengé
423	423	Cedro / Cedar
422	422	Abedul / Birch
153	153	Gris antracita / Grey anthracite

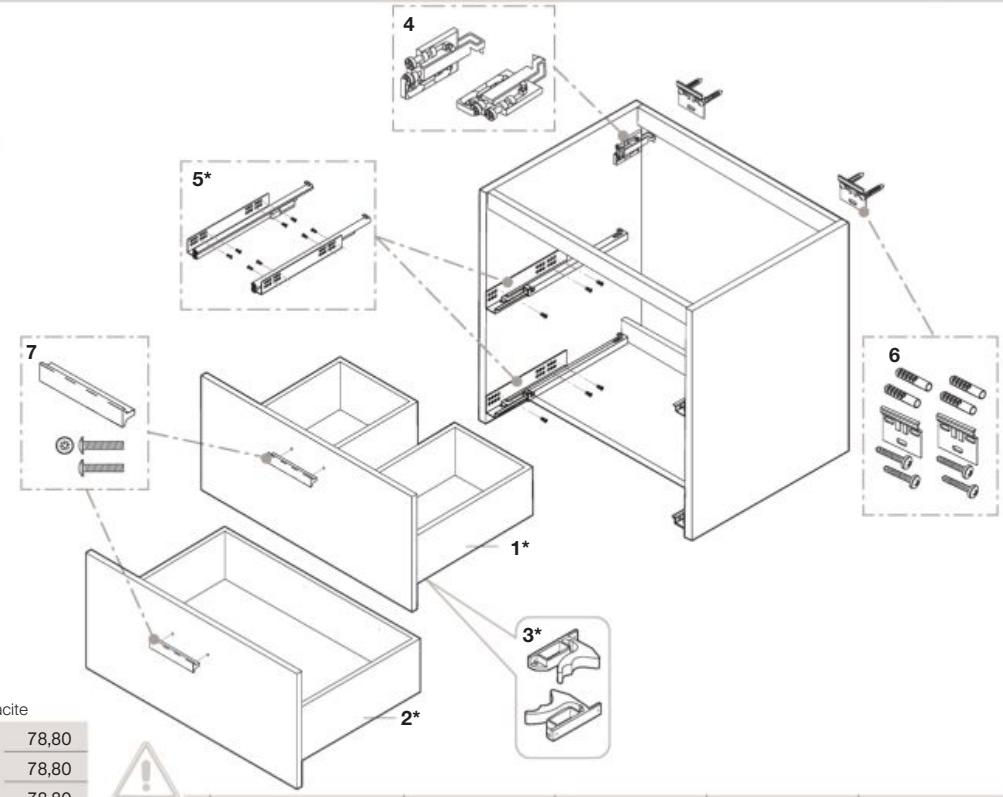

1*	**AU00451806**	600 mm	D	78,80
	AU00451423			78,80
	AU00451422			78,80
	AU00451153			83,50
	AU00453806	700 mm	D	89,20
	AU00453423			89,20
	AU00453422			89,20
	AU00453153			89,00
	AU00455806	800 mm	D	88,30
	AU00455423			88,30
	AU00455422			88,30
	AU00455153			93,70
	AU00457806	1000 mm	D	109,00
	AU00457423			109,00
	AU00457422			109,00
	AU00457153			116,00
2*	**AU00373WHR**	600 mm	D	70,50
	AU00452423			65,00
	AU00452422			65,00
	AU00452153			73,70
	AU00375WHR	700 mm	D	78,00
	AU00454423			68,50
	AU00454422			68,50
	AU00454153			81,80
	AU00377WHR	800 mm	D	85,30
	AU00456423			74,20
	AU00456422			77,30
	AU00456153			88,70
	AU00381WHR	1000 mm	D	98,80
	AU00458423			86,20
	AU00458422			86,20
	AU00458153			103,00
3*	**AU0017300R**	D		4,68
4	**AU0004900R**	B/C/D		10,50
5*	**AU0038500R**	D		20,50
6	**AU0013300R**	B/C/D		15,80
7	**AU0005100R**	B/C/D		13,90

MODELO	TRAZABILIDAD Traceability		1*	2*	3*	5*
600	B	**ANTERIOR A before 2219674000**	**AU00372..R + AU0038500R + AU0017300R**	**AU00373..R + AU0038500R + AU0017300R**	**AU0004800R**	**AU0005000R**
	C	**ENTRE / between 2219674000 Y 2456437001**	**AU00372WHR AU00372WAR AU00372WER**	**AU00373WHR AU00373WAR AU00373WER**	**AU0017300R**	**AU0038500R**
	D	**POSTERIOR A after 2456437001**	**AU00451806 AU00451423 AU00451422 AU00451153**	**AU00373WHR AU00452423 AU00452422 AU00452153**	**AU0017300R**	**AU0038500R**
700	B	**ANTERIOR before A2219726000**	**AU00374..R + AU0038500R + AU0017300R**	**AU00375..R + AU0038500R + AU0017300R**	**AU0004800R**	**AU0005000R**
	C	**ENTRE / between 2219726000 Y 2456456001**	**AU00374WHR AU00374WAR AU00374WER**	**AU00375WHR AU00375WAR AU00375WER**	**AU0017300R**	**AU0038500R**
	D	**POSTERIOR A after 2456456001**	**AU00453806 AU00453423 AU00453422 AU00453153**	**AU00375WHR AU00454423 AU00454422 AU00454153**	**AU0017300R**	**AU0038500R**
800	B	**ANTERIOR A before 2219669000**	**AU00376..R + AU0038500R + AU0017300R**	**AU00377..R + AU0038500R + AU0017300R**	**AU0004800R**	**AU0005000R**
	C	**ENTRE / between 2219674000 Y 2456444001**	**AU00376WHR AU00376WAR AU00376WER**	**AU00377WHR AU00377WAR AU00377WER**	**AU0017300R**	**AU0038500R**
	D	**POSTERIOR A after 2456444001**	**AU00455806 AU00455423 AU00455422 AU00455153**	**AU00377WHR AU00456423 AU00456422 AU00456153**	**AU0017300R**	**AU0038500R**
1000	B	**ANTERIOR A before 2216704000**	**AU00380..R + AU0038500R + AU0017300R**	**AU00381..R + AU0038500R + AU0017300R**	**AU0004800R**	**AU0005000R**
	C	**ENTRE / between 2219674000 Y 2456448001**	**AU00380WHR AU00380WAR AU00380WER**	**AU00381WHR AU00381WAR AU00381WER**	**AU0017300R**	**AU0038500R**
	D	**POSTERIOR A after 2456448001**	**AU00457806 AU00457423 AU00457422 AU00457153**	**AU00381WHR AU00458423 AU00458422 AU00458153**	**AU0017300R**	**AU0038500R**

Cajones en versión "C" hasta fin de existencias / Version "C" drawers until end of stock

Victoria Basic

Atención: Para sustituir los cajones antiguos (versiones A/B) por uno nuevo (versión C), será necesario cambiar también las guías y los enganches del cajón. Ver recambios marcados con (*), consultar la trazabilidad en la tabla de recambios.
Warning: To replace the old drawers (version B) with a new one (C/D versions), you must also change the guides and drawer catches. Check traceability in spare parts table.

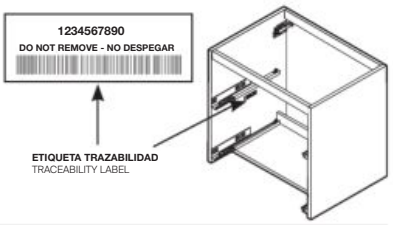

Mueble base de cuatro cajones / Four drawers vanity unit

A855855...	Pack	1200 mm
A855850...	Unik	
A856575...	Vanity Unit	600 mm

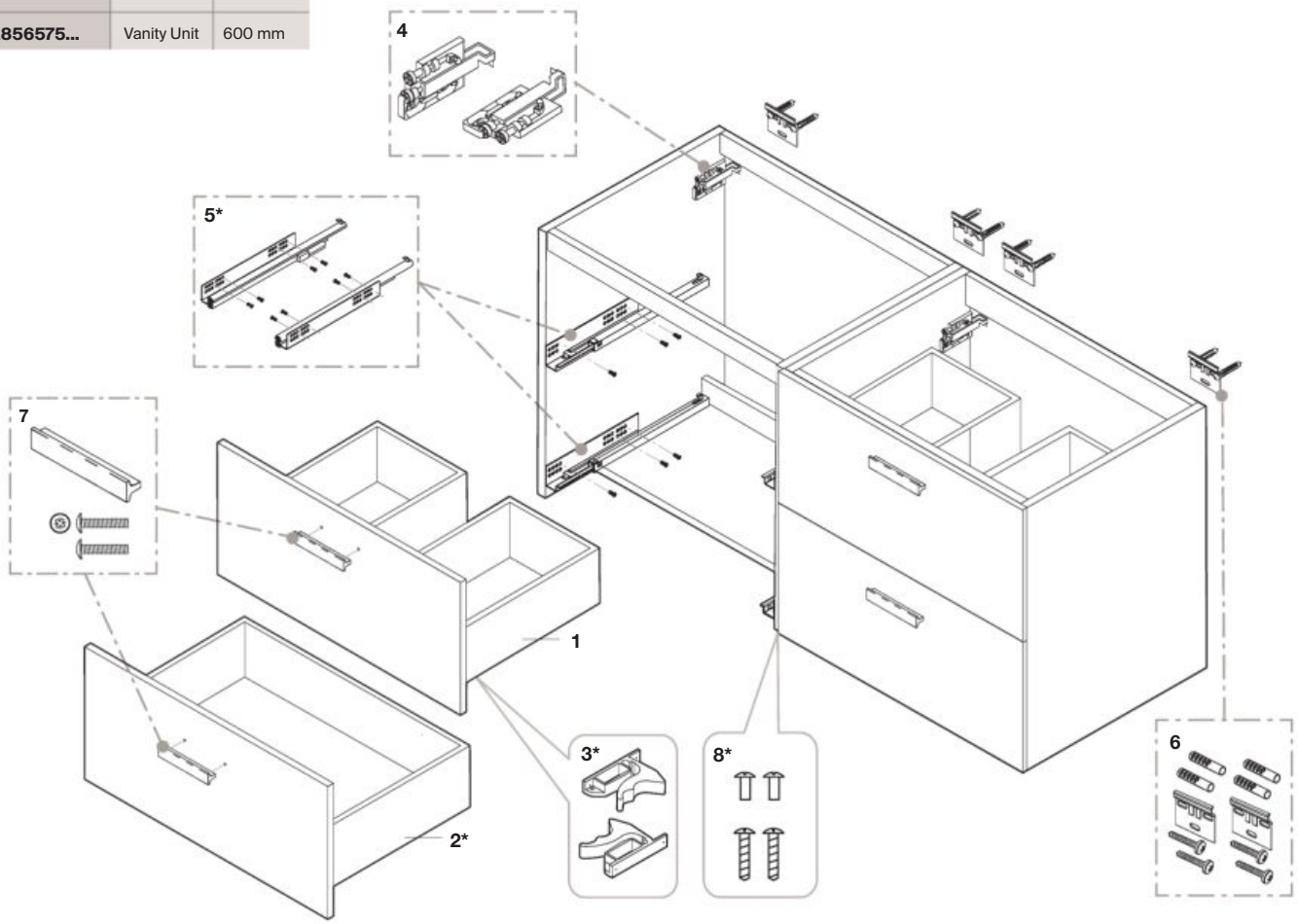

Las últimas posiciones de cada código indican el acabado (color):
The last positions indicates the finish (colour):

Producto Product	Recambio Spare part	Acabado Finished
806	**WH**	**Blanco /** White
222	**WA**	**Nogal /** Walnut
221	**WE**	**Wengé**
423	**423**	**Cedro /** Cedar
422	**422**	**Abedul /** Birch
153	**153**	**Gris antracita /** Grey anthracite

					€
1*		**AU00451806**	600 mm	D	78,80
		AU00451423			78,80
		AU00451422			78,80
		AU00451153			83,50
2*		**AU00373WHR**	600 mm	D	70,50
		AU00452423			65,00
		AU00452422			65,00
		AU00452153			73,70
3*	+	**AU0017300R**	D		4,68
4	+	**AU0004900R**	B/C/D		10,50
5*	+	**AU0038500R**	D		20,50
6		**AU0013300R**	B/C/D		15,80
7		**AU0005100R**	B/C/D		13,90
8		**AU0010100R**	1200 mm	B/C/D	5,20

MODELO	TRAZABILIDAD		1*	2*	3*	5*
600	B	**ANTERIOR A before 2219674000**	**AU00372..R + AU0038500R + AU0017300R**	**AU00373..R + AU0038500R + AU0017300R**	**AU0004800R**	**AU0005000R**
	C	**ENTRE / between 2219674000 Y 2456437001**	**AU00372WHR AU00372WAR AU00372WER**	**AU00373WHR AU00373WAR AU00373WER**	**AU0017300R**	**AU0038500R**
	D	**POSTERIOR A after 2456437001**	**AU00451806 AU00451423 AU00451422 AU00451153**	**AU00373WHR AU00452423 AU00452422 AU00452153**	**AU0017300R**	**AU0038500R**

Cajones en versión "C" hasta fin de existencias / Version "C" drawers until end of stock

Victoria Basic

Columna de una puerta / One door column

A856577...	1500 mm

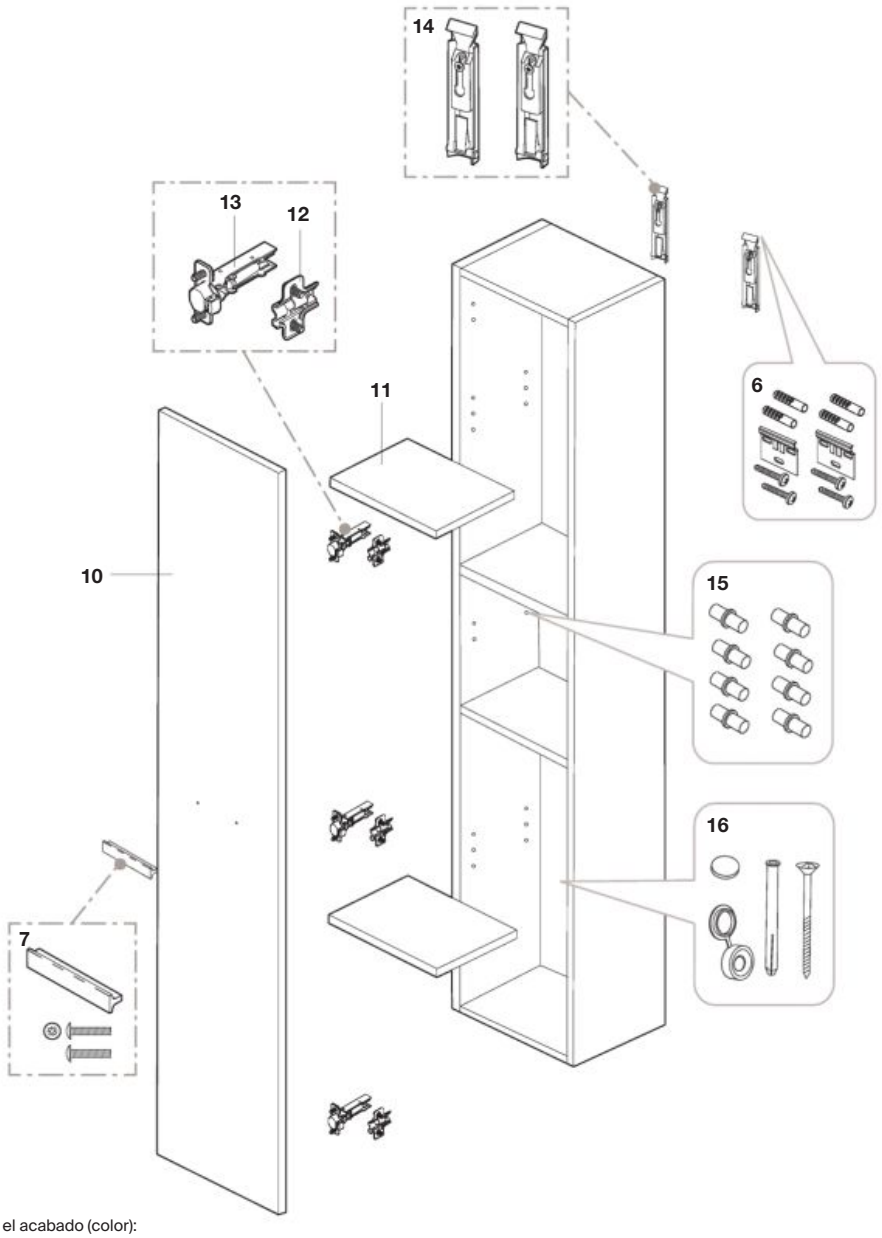

Las últimas posiciones de cada código indican el acabado (color):
The last positions indicates the finish (colour):

Producto Product	Recambio Spare part	Acabado Finished
806	**WH**	**Blanco /** White Lacquered
222	**WA**	**Nogal /** Walnut
221	**WE**	**Wengé**

			€
6		**AU0013300R**	15,80
7		**AU0005100R**	13,90
10		**AU00055WHR**	106,00
		AU00055WAR	65,80
		AU00055WER	N.D.
11		**AU00037WHR**	15,00
		AU00037WAR	13,50
		AU00037WER	N.D.
12		**AU0011800R**	6,98
13	2 un	**AU0011900R**	14,30
14	2 un	**AU0004000R**	10,50
15		**AU0004100R**	5,23
16	4 un	**AU0004200R**	10,50

Victoria Basic

Espejos / Mirrors

ESPEJO VICTORIA / VICTORIA BASIC Victoria / Victoria Basic mirror	
A856683...	1200 x 600 mm
A856684...	1000 x 600 mm
A812229...	800 x 600 mm
A856685...	700 x 600 mm
A812228...	600 x 600 mm

ESPEJO VICTORIA-N / VICTORIA -N FAMILY Victoria-N / Victoria-N Family mirror	
A856663...	1200 x 700 mm
A856664...	1000 x 700 mm
A856659...	900 x 700 mm
A856665...	800 x 700 mm
A856666...	700 x 700 mm
A856667...	600 x 700 mm

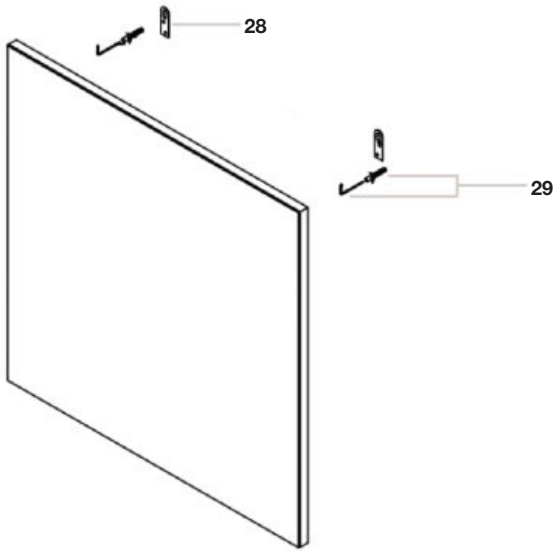

28	2 un	**AU0004500R**	5,23
29	2 un	**AU0005200R**	5,23

Apliques y patas / Wall lights and legs

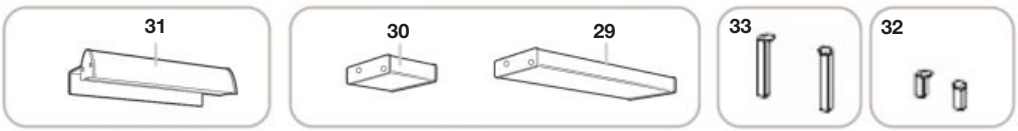

Producto acabado compatible:
Finished product compatible:

				€
29		**A813050001**	V-N / Family	-
30		**A813051001**	V-N / Family	-
31		**A813049001**	V / Basic	-
32	2 un	**A816555001**	V-N Family	-
33	2 un	**A816413001**	V-N / V / V Basic	-

Tura

Mueble base una puerta CPT / Base unit one door CPT

UNIK: MUEBLE BASE 1 PUERTA CPT + LAVABO Base unit 1 door CPT + WB	
A852022...	550 mm

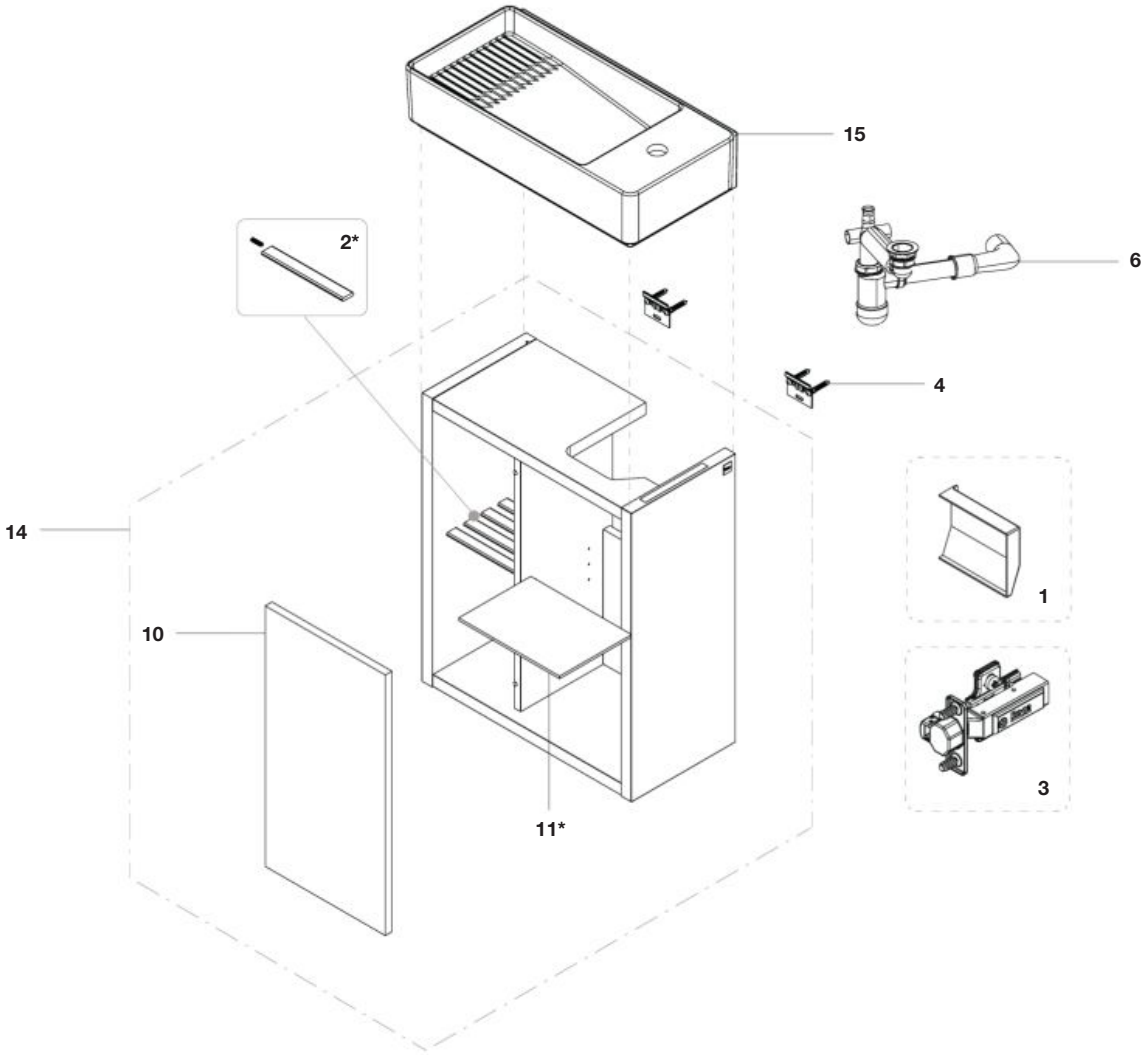

Las últimas posiciones de cada código indican el acabado (color):
The last positions indicates the finish (colour):

Producto Product	Recambio Spare part	Acabado Finished
558	**OW**	**Blanco roto /** Off-White
559	**NG**	**Gris Noble Claro /** Light Noble Grey
560	**LT**	**Terracota claro /** Light Terracota
565	**LE**	**Olmo claro /** Light Elm

			€
1	2 un	**AU0110000R**	0,88
2	8 un	**AU0110100R**	57,20
3	2 un	**AU0099900R**	17,20
4	2 un	**AU0013300R**	15,80
6		**AU0110200R**	49,80

			€
10	**AU01111OWR**	550 mm	98,80
	AU01111NGR		88,30
	AU01111LTR		107,00
	AU01111LER		58,00
11	**AU0110500R**	550 mm	15,10

*Para el acabado OLMO CLARO (565):
For finish Light Elm (565):

		€
2	**AU01101LE0R**	-
11	**AU01105LER**	40,30

Producto acabado compatible:
Finished product compatible:

			€
14	**A857876...**	550 mm	-
15	**A327692000**	550 mm	-

Tura

Mueble base un cajón + un estante inferior / Base unit one drawer + one bottom shelf

UNIK: MUEBLE BASE 1 CAJÓN + 1 ESTANTE INFERIOR + LAVABO Base unit 1 drawer + 1 bottom shelf + WB	
A852023...	450 mm
A852024...	550 mm
A852025...	600 mm
A852030...	800 mm
A852037...	1000 mm

UNIK: MUEBLE BASE 1 CAJÓN + 1 ESTANTE INFERIOR + LAVABO (2 GRIFOS) Base unit 1 drawer + 1 bottom shelf + WB (2 taps)	
A852038...	1000 mm

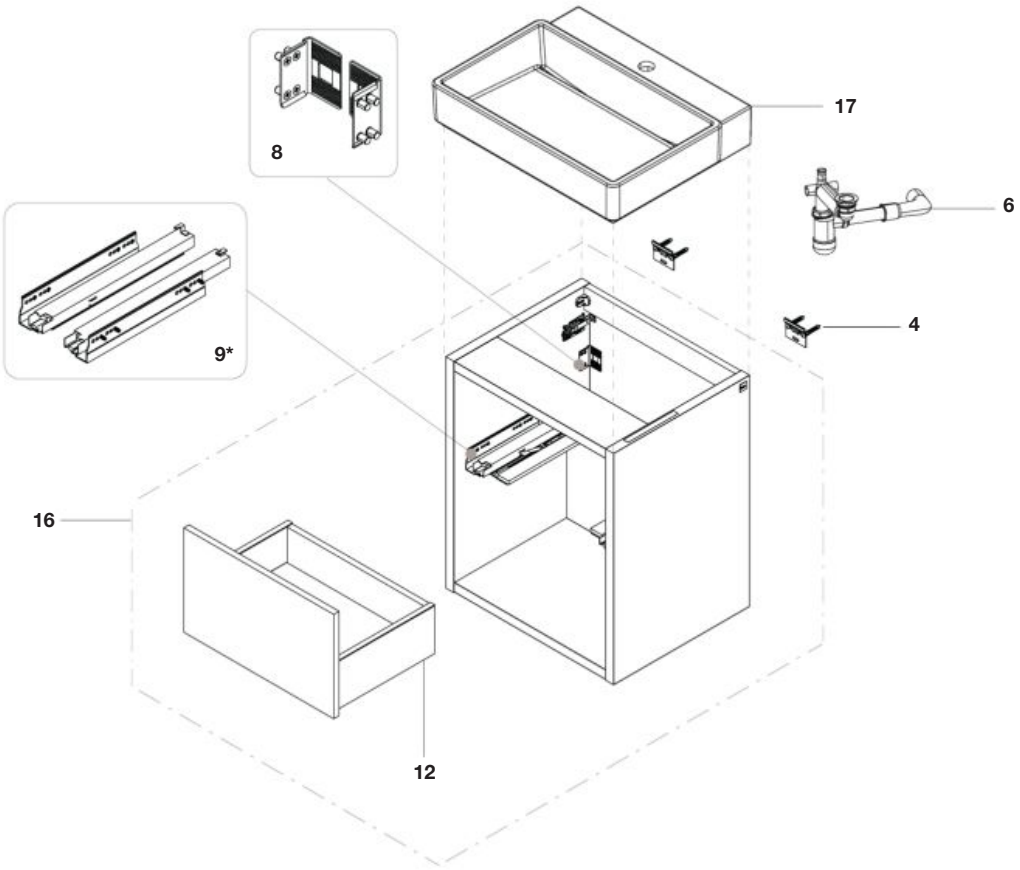

Las últimas posiciones de cada código indican el acabado (color):
The last positions indicates the finish (colour):

Producto Product	Recambio Spare part	Acabado Finished
558	**OW**	Blanco roto / Off-White
559	**NG**	Gris Noble Claro / Light Noble Grey
560	**LT**	Terracota claro / Light Terracota
565	**LE**	Olmo claro / Light Elm

				€
4	2 un	**AU0013300R**		15,80
6		**AU0110200R**		49,80
8	2 un	**AU0106400R**		16,20
9		**AU0110300R**	400 mm	-
		AU0114100R	450 mm	197,00
		AU0114200R	550 mm	187,00
		AU0110400R	600 mm	187,00
		AU0114300R	800 mm	188,00
		AU0114600R	1000 mm	190,00

				€
12		**AU01112OWR**	450 mm	223,00
		AU01112NGR		223,00
		AU01112LTR		228,00
		AU01112LER		187,00
		AU01113OWR	550 mm	233,00
		AU01113NGR		232,00
		AU01113LTR		240,00
		AU01113LER		202,00
		AU01114OWR	600 mm	237,00
		AU01114NGR		235,00
		AU01114LTR		243,00
		AU01114LER		208,00
		AU01115OWR	800 mm	265,00
		AU01115NGR		262,00
		AU01115LTR		270,00
		AU01115LER		232,00
		AU01116OWR	1000 mm	285,00
		AU01116NGR		283,00
		AU01116LTR		290,00
		AU01116LER		252,00

Producto acabado compatible:
Finished product compatible:

			€
16	**A857877...**	450 mm	-
	A857878...	550 mm	-
	A857879...	600 mm	-
	A857884...	800 mm	-
	A857890...	1000 mm	-
17	**A327690000**	450 mm	-
	A327693000	550 mm	-
	A327694000	600 mm	-
	A327695000	800 mm	-
	A327698000	1000 mm	-
	A327699000	1000 mm (2 tap holes)	-

Tura

Mueble base dos cajones / Base unit two drawers

UNIK: MUEBLE BASE 2 CAJONES + LAVABO Base unit 2 drawers + WB	
A852026...	600 mm
A852033...	800 mm
A852035...	1000 mm

UNIK: MUEBLE BASE 2 CAJONES + LAVABO (2 GRIFOS) Base unit 2 drawers + WB (2 faucets)	
A852036...	1000 mm

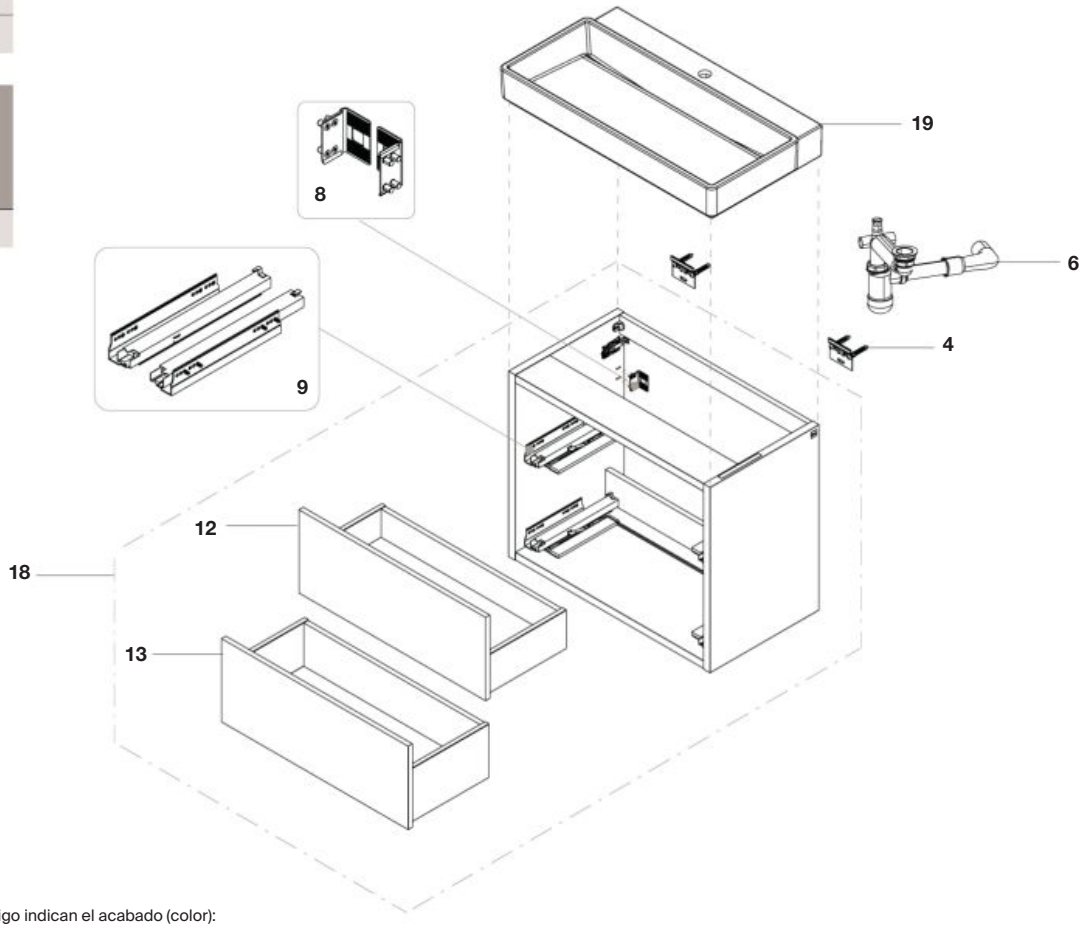

Las últimas posiciones de cada código indican el acabado (color):
The last positions indicates the finish (colour):

Producto Product	Recambio Spare part	Acabado Finished
558	**OW**	**Blanco roto /** Off-White
559	**NG**	**Gris Noble Claro /** Light Noble Grey
560	**LT**	**Terracota claro /** Light Terracota
565	**LE**	**Olmo claro /** Light Elm

				€
4	2 un	**AU0013300R**		15,80
6		**AU0110200R**		49,80
8	2 un	**AU0106400R**		16,20
9		**AU0110400R**	600 mm	187,00
		AU0114300R	800 mm	188,00
		AU0114600R	1000 mm	190,00
12		**AU01114OWR**	600 mm	237,00
		AU01114NGR		235,00
		AU01114LTR		243,00
		AU01114LER		208,00
		AU01115OWR	800 mm	265,00
		AU01115NGR		262,00
		AU01115LTR		270,00
		AU01115LER		232,00
		AU01116OWR	1000 mm	285,00
		AU01116NGR		283,00
		AU01116LTR		290,00
		AU01116LER		252,00

			€
13	**AU01118OWR**	600 mm	297,00
	AU01118NGR		295,00
	AU01118LTR		300,00
	AU01118LER		255,00
	AU01117OWR	800 mm	272,00
	AU01117NGR		270,00
	AU01117LTR		275,00
	AU01117LER		230,00
	AU01119OWR	1000 mm	318,00
	AU01119NGR		317,00
	AU01119LTR		322,00
	AU01119LER		277,00

Producto acabado compatible:
Finished product compatible:

			€
18	**A857880...**	600 mm	-
	A857887...	800 mm	-
	A857889...	1000 mm	-
19	**A327694000**	600 mm	-
	A327695000	800 mm	-
	A327698000	1000 mm	-
	A327699000	1000 mm (2 tap holes)	-

Tura

Mueble base dos cajones con estante lateral derecho / Base unit two drawers with right side shelf

UNIK: **MUEBLE BASE 2 CAJONES** **+ ESTANTE LATERAL DCH + WB** Base unit 2 drawers + right side shelf + WB	
A852027...	800 mm

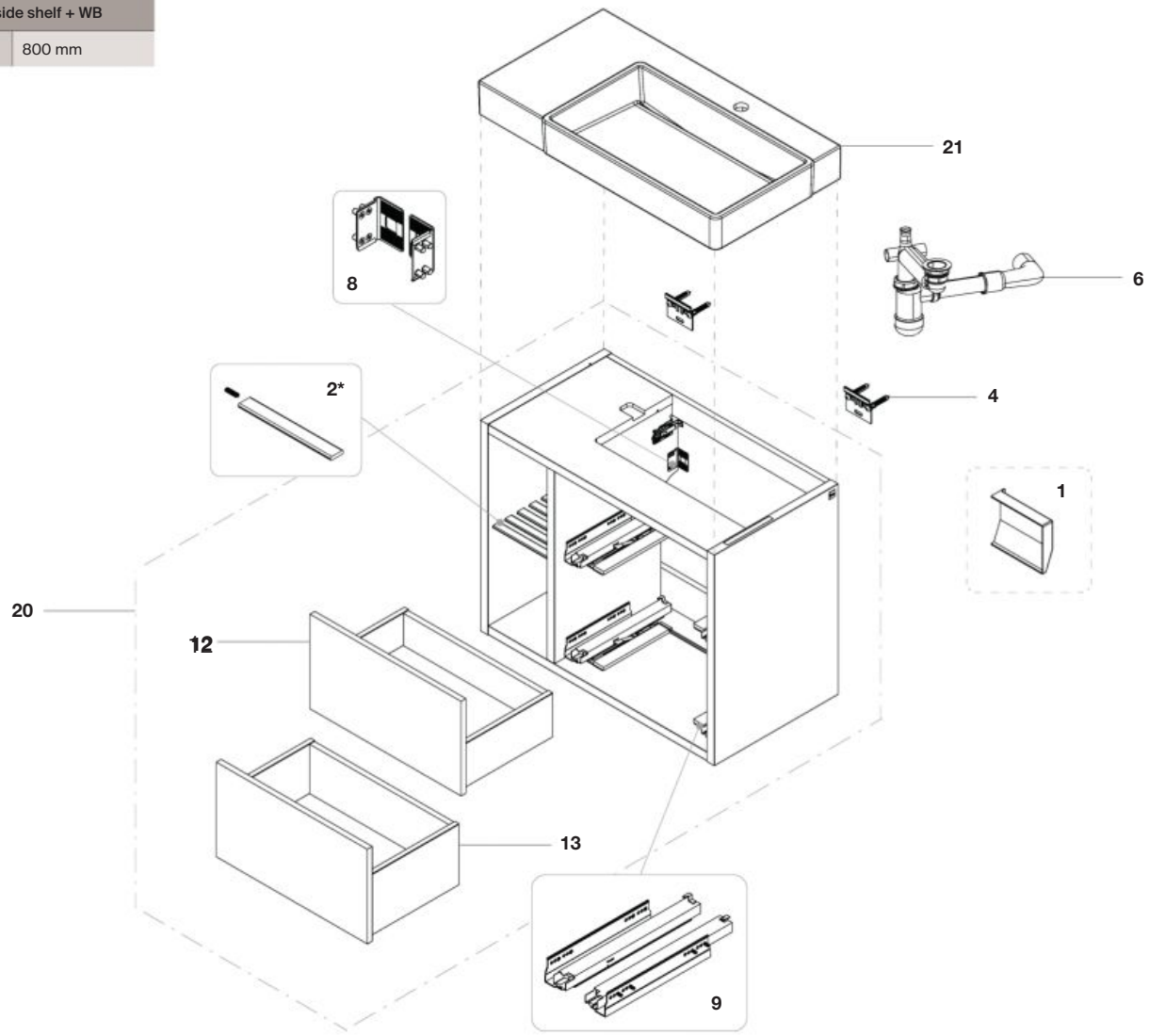

Las últimas posiciones de cada código indican el acabado (color):
The last positions indicates the finish (colour):

Producto Product	Recambio Spare part	Acabado Finished
558	**OW**	Blanco roto / Off-White
559	**NG**	Gris Noble Claro / Light Noble Grey
560	**LT**	Terracota claro / Light Terracota
565	**LE**	Olmo claro / Light Elm

			€
1	2 un	**AU0110000R**	0,88
2*	8 un	**AU0114500R**	84,80
4	2 un	**AU0013300R**	15,80
6		**AU0110200R**	49,80
8	2 un	**AU0106400R**	16,20
9	+	**AU0110400R**	187,00

			€
12	**AU01114OWR**	800 mm	237,00
	AU01114NGR		235,00
	AU01114LTR		243,00
	AU01114LER		208,00
13	**AU01117OWR**	800 mm	272,00
	AU01117NGR		270,00
	AU01117LTR		275,00
	AU01117LER		230,00

***Para el acabado OLMO CLARO (565):**
For finish Light Elm (565):

		€
2	**AU01145LER**	42,70

Producto acabado compatible:
Finished product compatible:

			€
20	**A857881...**	800 mm	-
21	**A327696000**	800 mm	-

Tura

Mueble base dos cajones con estante lateral izquierdo / Base unit two drawers with left side shelf

UNIK: **MUEBLE BASE 2 CAJONES** **+ ESTANTE LATERAL IZQ + WB** Base unit 2 drawers + left side shelf + WB	
A852028...	800 mm

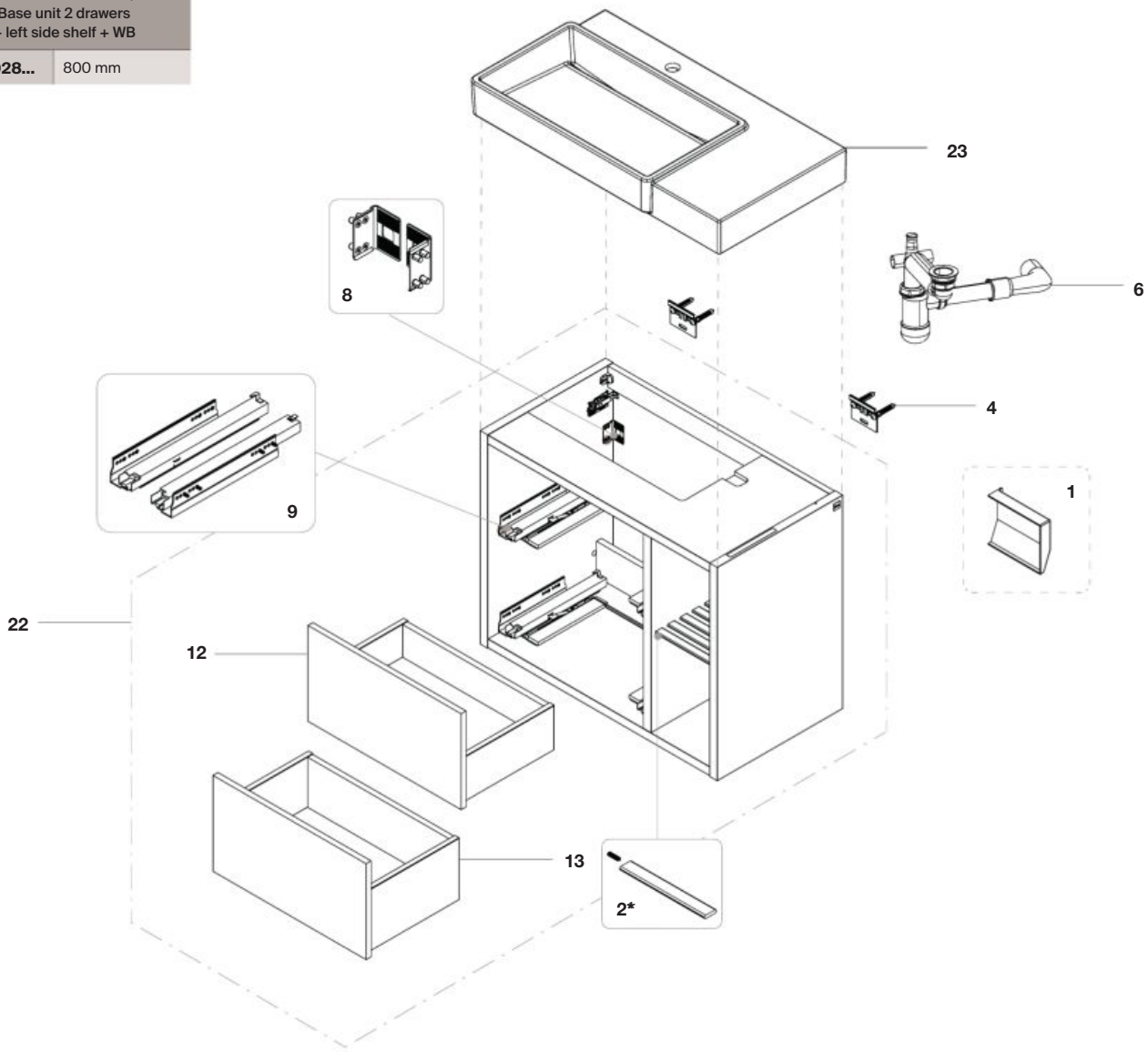

Las últimas posiciones de cada código indican el acabado (color):
The last positions indicates the finish (colour):

Producto Product	Recambio Spare part	Acabado Finished
558	**OW**	Blanco roto / Off-White
559	**NG**	Gris Noble Claro / Light Noble Grey
560	**LT**	Terracota claro / Light Terracota
565	**LE**	Olmo claro / Light Elm

			€
1	2 un	**AU0110000R**	0,88
2*	8 un	**AU0114500R**	84,80
4	2 un	**AU0013300R**	15,80
6		**AU0110200R**	49,80
8	2 un	**AU0106400R**	16,20
9	+	**AU0110400R**	187,00

			€
12	**AU01114OWR**	800 mm	237,00
	AU01114NGR		235,00
	AU01114LTR		243,00
	AU01114LER		208,00
13	**AU01117OWR**	800 mm	272,00
	AU01117NGR		270,00
	AU01117LTR		275,00
	AU01117LER		230,00

***Para el acabado OLMO CLARO (565):**
For finish Light Elm (565):

		€
2	**AU01145LER**	42,70

Producto acabado compatible:
Finished product compatible:

			€
22	**A857882...**	800 mm	-
23	**A327697000**	800 mm	-

Tura

Taza tanque bajo adosado a pared rimless / Close-coupled back-to-wall WC pan rimless

TAZA TANQUE BAJO ADOSADO A PARED RIMLESS
Close-coupled back-to-wall WC pan, rimless Tura
A342697000

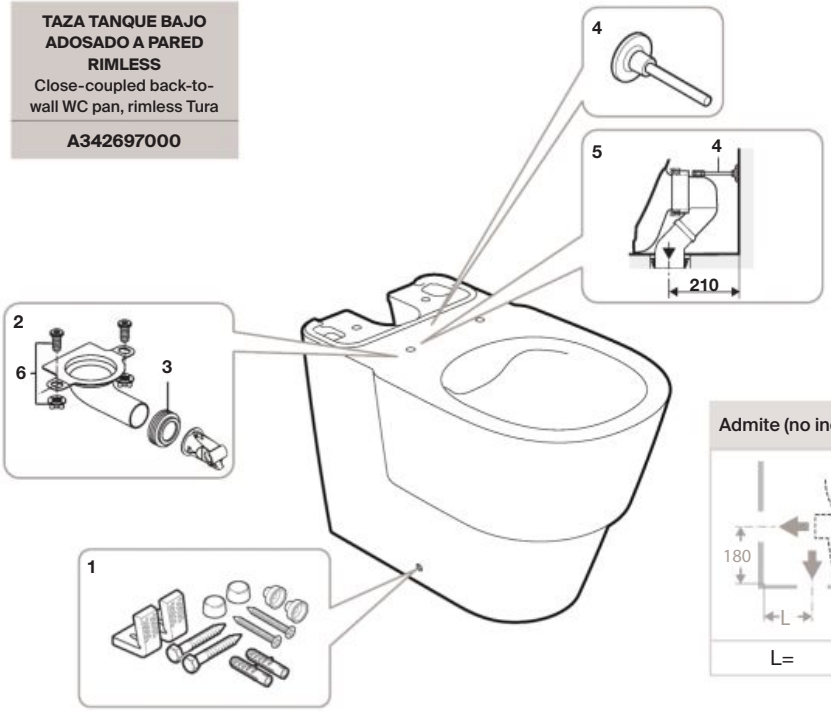

Admite (no incluido) / Admits (not included)

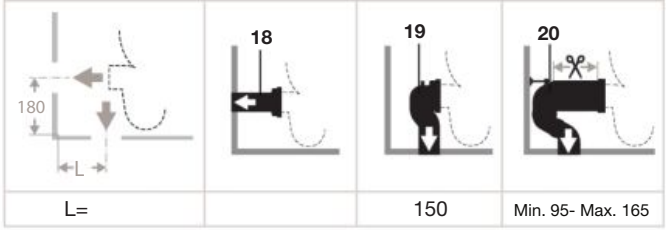

L=		150	Min. 95- Max. 165

		€
1	**AV0009400R**	6,16
2	**AV0062900R**	21,30
3	**AV0037400R**	15,90
4	**AV0013100R**	3,46
5	**AV0007700R**	14,60
6	**AV0037200R**	15,90
18	**AV0009300R**	42,70
19	**AV0007900R**	14,60
20	**AV0007000R**	46,10

Taza adosada a pared rimless / Floor standing back-to-wall WC pan rimless

TAZA ADOSADA A PARED RIMLESS
Floor standing back-to-wall WC pan rimless Tura
A347697000

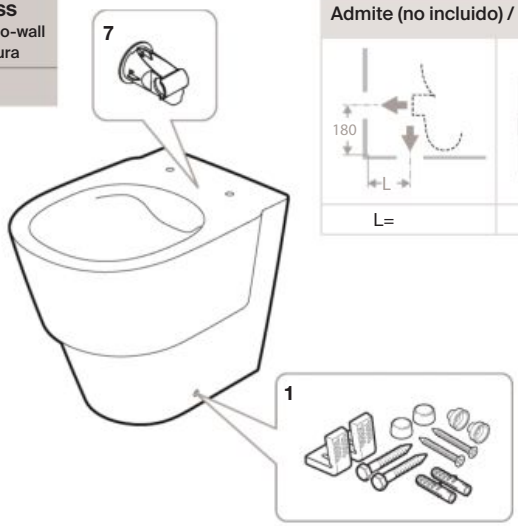

Admite (no incluido) / Admits (not included)

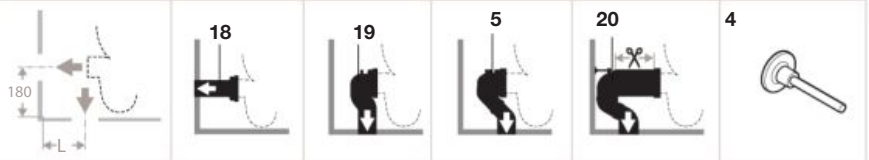

L=		90	150	Min. 95- Max. 125	

		€
1	**AV0009400R**	6,16
4	**AV0013100R**	3,46
5	**AV0007700R**	14,60
7	**AV0060400R**	7,59
18	**AV0009300R**	42,70
19	**AV0007900R**	14,60
20	**AV0007000R**	46,10

Tura

Taza suspendida rimless / Wall-hung WC pan rimless

TAZA SUSPENDIDA RIMLESS Wall-hung WC pan rimless Tura
A346697000

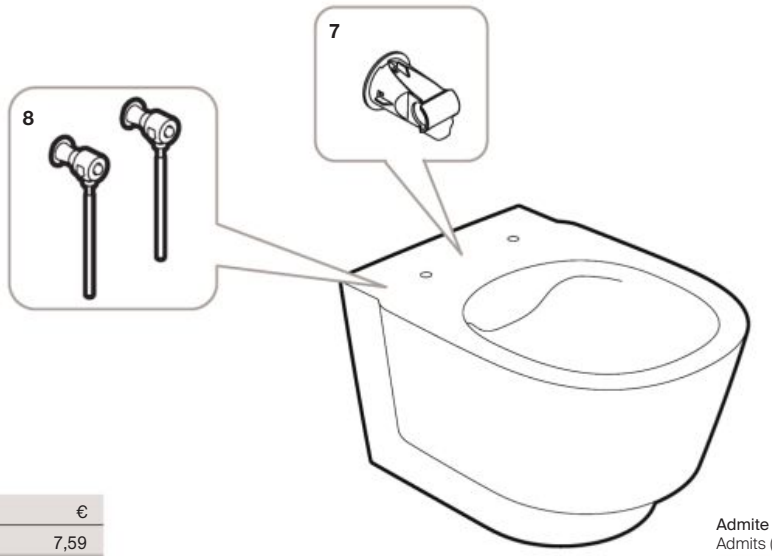

Admite / Admits



		€
7	**AV0060400R**	7,59
8	**AV0058400R**	42,40
21	**AV0007800R**	8,11

Admite (no incluido)
Admits (not included)

		€
21	**AV0007800R**	8,11

Tanque con doble descarga 4,5/3L / Cistern with dual flush 4,5/3L

TANQUE DOBLE DESCARGA Cistern with dual flush Tura	
A341694000	Inferior / Bottom
A341694000	UK Inferior / Bottom

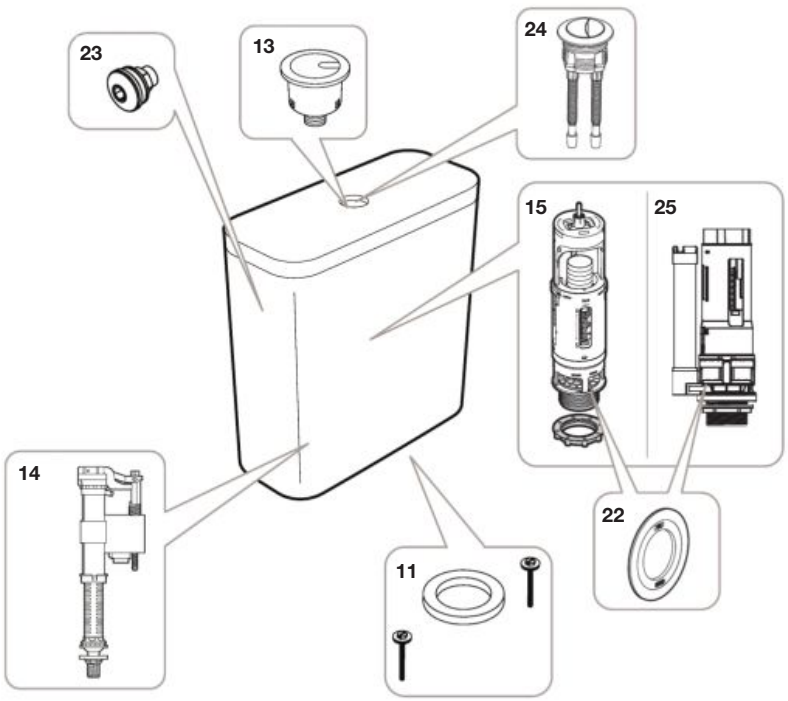

			€
11	**AV0036000R**		10,20
13	**AH0011300R**		14,50
22	**AH0011400R**		6,42
	AH0019100R	UK	0,94
23	**AV0037100R**	UK	2,80
24	**AH0019000R**	UK	3,04

Producto acabado compatible:
Finished product compatible:

			€
14	**A822505750**	UK	-
	A822508900		-
15	**A822505500**		-
25	**A822505740**	UK	-

Tura

Bidé adosado a pared / Bidet back-to-wall

Bidé adosado a pared Bidet back-to-wall Tura
A357697..0

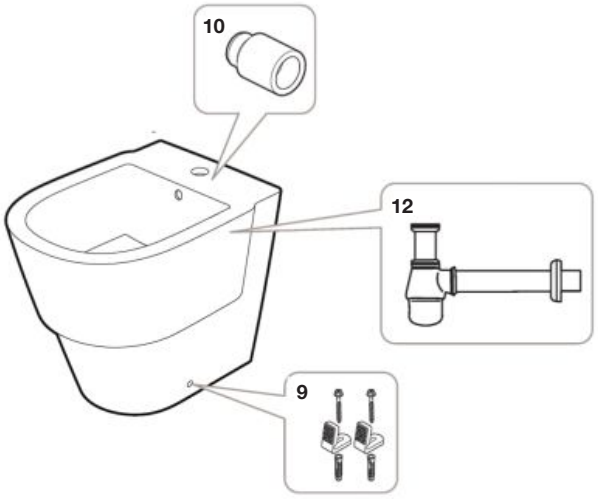

		€
9	**AV0026826R**	9,95
10	**AV0013400R**	6,03
12	**A506401814**	27,50

Bidé suspendido / Wall-hung Bidet

Bidé suspendido Wall-hung Bidet Tura
A357698..0

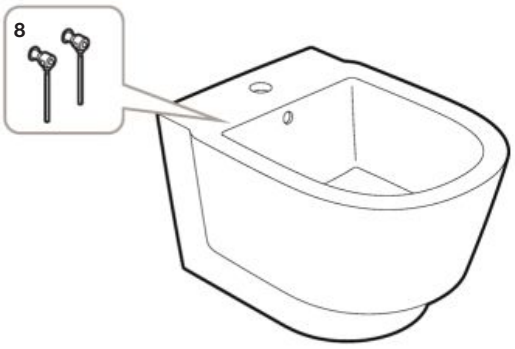

Admite / Admits

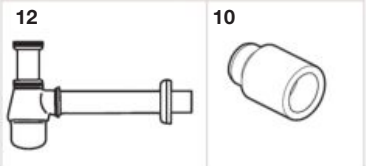

		€
8	**AV0058400R**	44,40

Admite (no incluido)
Admits (not included)

		€
10	**AV0013400R**	6,03
12	**A506401814**	27,50

Lavabo suspendido / Wall-hung washbain

Lavabo suspendido Wall-hung washbasin Tura	
A327695000	800x450
A327696000	800X430 RH
A327697000	800X430 LH
A327698000	1000x430
A327690000	450x360
A327692000	550x275
A327693000	550x430
A327694000	600x430
A327691000	450x350

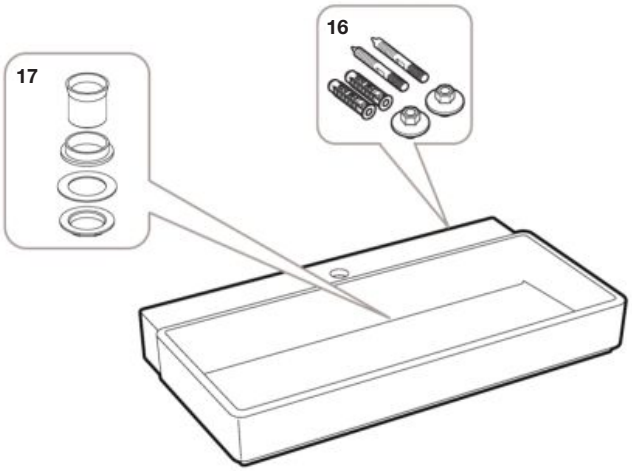

		€
16	**AV0075078R**	5,51
17	**AV0062828R**	44,40

Amberes

Lavabo / Washbasin

A893030001

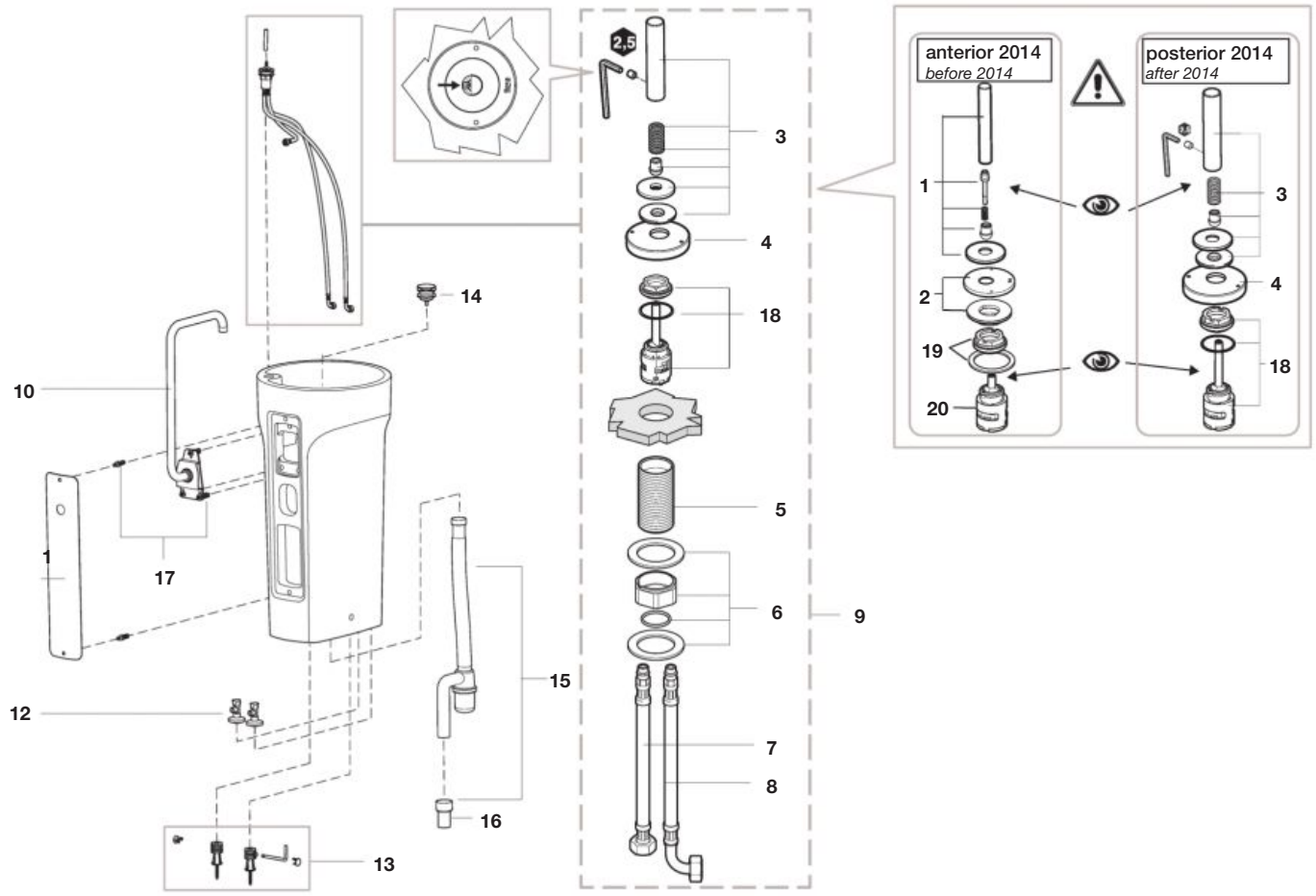

		€
1	**AG0008200R**	148,00
2	**AG0016600R**	39,70
3	**AG0110200R**	131,00
4	**AG0008600R**	92,90
5	**AG0016500R**	36,90
6	**AG0007403R**	17,00

		€
7	**AG0008009R**	10,60
8	**AG0016400R**	18,70
9	**AG0112200R**	556,00
10	**AG0016100R**	73,90
11	**AG0017100R**	232,00
12	**AG0078200R**	30,90

		€
13	**AV0008900R**	59,80
14	**A50640390C**	57,20
15	**AG0016900R**	N.D.
16	**AV0013400R**	6,03
17	**AG0016700R**	14,90
18	**AG0110303R**	67,90

		€
19	**AG0016300R**	22,40
20	**AG0110303R**	67,90

Khroma

		€
A822023100	Mec. Descarga D3_D khroma / Discharge Mec. D3_D Khroma	61,30
A822034101	Pulsador khroma D3D / Push button Khroma D3D	36,40
A822039500	Jgo.Fij.WC/bide mural khroma / Fixations WC/bide Khroma	25,40
A822077000	Tanque plastico khroma / Plastic cistern Khroma	33,10
A822097100	Fijacion tanque-taza khroma / Bowl-cistern fixation Khroma	10,90
A822867001	Jgo.Mec.Khroma A3_I+D3D / Set mec. Khroma A3_I D3D	203,00

		€
AI0002200R	Kit embellecedor bisagras / Kit ornamental hinge	2,17
AI0003800R	Kit bisagra amortiguada khroma / Kit cushioned hinge Khroma	88,20
AI0003900R	Kit soporte respaldo khroma / Kit supports backrest Khroma	30,80
AI0004000R	Kit soport amort c r (tap bi) khroma / Kit dumpers support	44,80
AI0004600R	Kit anclajes respaldo khroma / Kit anchorage backrest Khroma	23,70
AV0017300R	Kit fijación tanque plástico khroma / Kit plastic fixation cisten	11,90

Barcelona

Grifería para lavabo / Basin faucet

A5A3836

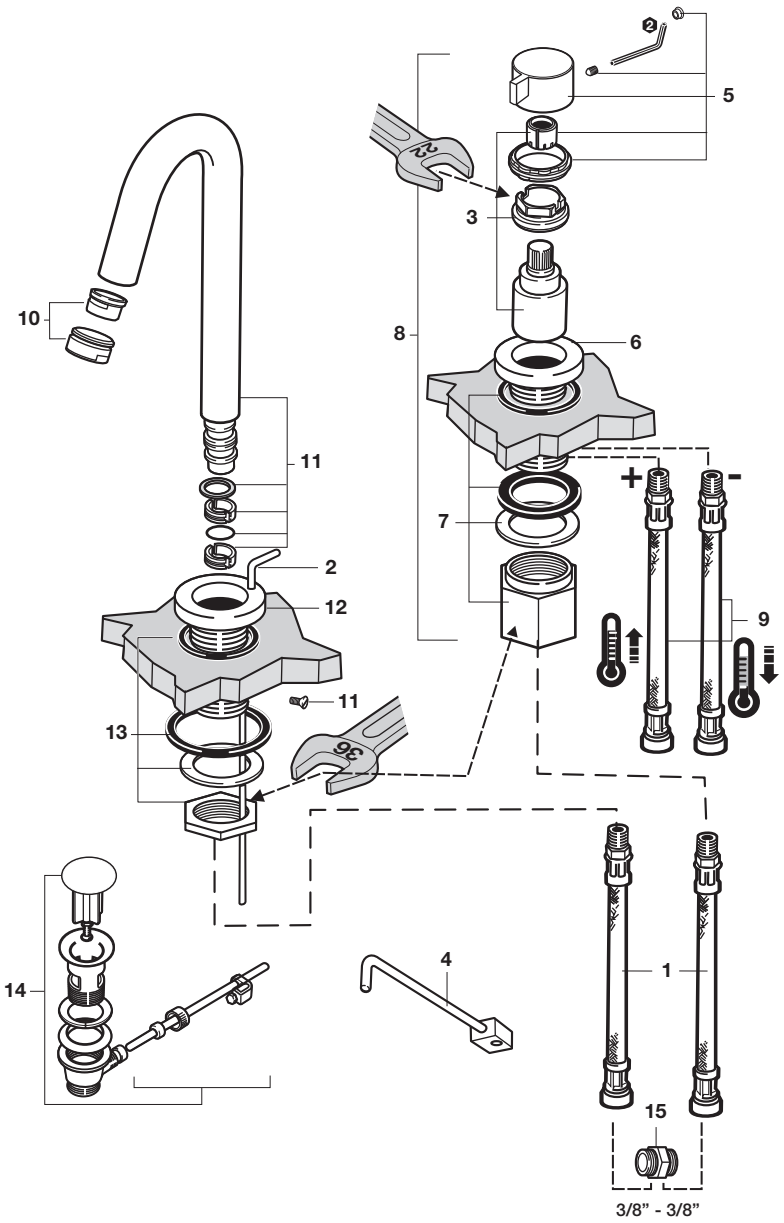

		€
1	**A525020309**	15,00
2	**AG0007219R**	11,30
3	**AG0007107R**	36,20
4	**AG0033300R**	30,00
5	**AG0007700R**	30,60
6	**AG0007300R**	112,00
7	**AG0007403R**	17,00
8	**AG0008400R**	70,50
9	**AG0008009R**	10,60
10	**AG0007900R**	14,80
11	**AG0007600R**	185,00
12	**AG0008800R**	133,00
13	**AG0008103R**	N.D.
14	**AG0007800R**	44,20
15	**AG0007503R**	38,20

Mecanismos universales / Universal mechanisms

Alimentación / Fill valve

COMPACT: Alimentación inferior / Bottom fill valve **Ref. A822504400**	
Mecanismo de alimentación A8I_m, entrada inferior con rosca metálica. Compacto y llenado rápido Fill valve A8I_m, bottom inlet metal thread. Compact with fast filling	23,20



Compacto
Compact

COMPACT: Alimentación lateral / Side fill valve **Ref. A822504300**	
Mecanismo de alimentación A8L_m, entrada lateral con rosca metálica. Compacto y llenado rápido Fill valve A8L_m, side inlet metal thread. Compact with fast filling	19,20



Compacto
Compact

COMPACT: Alimentación dual / Dual fill valve **Ref. A822509200**	
Mecanismo de alimentación dual entrada inferior y lateral con rosca metálica. Compacto y llenado rápido Fill valve A8 dual, side and botton inlet with metal thread. Compact with fast filling	-



Compacto
Compact

Descarga / Flush valve

Doble descarga PLUS / Dual flush plus D8 **Ref. A822505500**	
Mecanismo de doble descarga D8D (6/3 o 4,5/3 litros) con dos pulsadores (ø48 y ø58) Dual flush valve plus D8 (6/3 o 4,5/3 liters) with two push buttons (ø48 y ø58)	-



Descarga simple / Single flush valve **Ref. A822502200**	
Mecanismo de descarga simple D2P (6 litros interrumpible) con 4 pulsadores (cortos y largos, Ø27 y Ø40) Single flush valve D2P (litters start-stop) with 4 push buttons (short, Long, ø27 and ø40)	32,60



Doble descarga accionado por cable PLUS / Cable Dual flush plus **Ref. A822505700**	
Mecanismo de doble descarga plus (6/3 litros) accionamiento por cable, con pulsador, junta y fijaciones Cable dual flush valve plus (6/3 liters) cable activation with push button and fixation kit	43,00



Mecanismos universales /
Universal mechanisms

Juegos completos (alimentación + descarga accionada por cable) / Set cable action

Doble descarga Plus+ alimentación inferior compacto / Cable Dual flush plus + bottom inlet compact **Ref. A822505800**	**Doble descarga Plus + alimentación lateral compacto /** Cable Dual flush plus + side inlet compact **Ref. A822505900**
Mecanismo de alimentación A8l_m, entrada inferior con rosca metálica, mecanismo de doble descarga accionado por cable con pulsador, junta y fijaciones Fill valve A8l_m, bottom inlet metal thread, Cable dual flush valve plus (6/3 liters) cable activation with push button and fixation kit -	Mecanismo de alimentación A8L_m, entrada lateral con rosca metálica, mecanismo de doble descarga accionado por cable con pulsador, junta y fijaciones Fill valve A8L_m, side inlet metal thread. Compact with fast filling, Cable dual flush valve plus (6/3 liters) cable activation with push button and fixation kit -
	

Mecanismos Touchless / Touchless mechanisms

Touchless **Ref. A822599900**
Mecanismo electrónico EM1 de doble descarga Electronic mechanisms EM-1 -


Juegos completos (alimentación + doble descarga) / Dual flush kits

Doble descarga + alimentación lateral compacto / Dual flush + side inlet compact **Ref. A822509300**	**Doble descarga + alimentación inferior compacto /** Dual flush + bottom inlet compact **Ref. A822509400**
Mecanismo de alimentación A8l_m, entrada lateral con rosca metálica, mecanismo de doble descarga, junta y fijaciones Fill valve A8lm, side inlet metal thread, Dual flush valve (6/3 liters) with push button and fixation kit -	Mecanismo de alimentación A8l_m, entrada inferior con rosca metálica, mecanismo de doble descarga, junta y fijaciones Fill valve A8lm, bottom inlet metal thread, Dual flush valve (6/3 liters) with push button and fixation kit -
	

Mecanismos universales / Universal mechanisms

Compatibilidad mecanismos universales / Universal mechanisms compatibility

	JUEGOS COMPLETOS / VALVE KITS				DESCARGA / FLUSH VALVE				ALIMENTACIÓN / FILL VALVE		
	INFERIOR / Bottom	LATERAL / Side	LATERAL / Side	INFERIOR / Bottom	DOBLE / Dual	SIMPLE / Single	CABLE / Cable	TOUCHLESS	COMPACT INFERIOR / Bottom Compact	COMPACT LATERAL/ Side Compact	COMPACT DUAL / Dual Compact
											
	A822505800	A822505900	A822509300	A822509400	A822505500	A822502200	A822505700	A822599900	A822504400	A822504300	A822509200
	-	-	-	-	-	32,60	43,00	-	23,20	19,20	-
Access		•	•		•		•	•**		•	•
Aquaria	•			•					•		•
America	•			•	•	•	•		•		•
Atlanta		•	•							•	•
Beyond					•			•	•		•
Carmen								•	•		•
Civic		•	•		•	•	•			•	•
Dama	•*	•	•	•*	•	•	•*	•	•	•	•
Dama CPT		•	•		•	•	•	•	•	•	•
Dama Retro	•			•	•	•	•	•	•		•
Dama Senso	•			•	•	•	•		•		•
Dama Senso CPT		•	•		•	•	•			•	•
Debba	•	•	•	•	•	•	•	•	•	•	•
Element	•			•	•	•	•		•		•
Frontalis					•				•		•
Georgia	•			•	•	•	•		•		•
Giralda	•			•	•	•	•		•		•
Hall	•			•	•	•	•		•		•
Happening	•			•	•	•	•		•		•
Inspira					•			•	•		•
Khroma									•		•
Liberty	•			•	•	•	•		•		•
Meridian	•			•	•	•	•	•	•		•
Meridian-N	•			•	•	•	•	•	•		•
Ona	•	•	•	•	•		•	•	•	•	•
Sidney	•			•	•	•	•		•		•
The Gap	•	•	•	•	•	•	•	•	•	•	•
The Gap CPT	•	•	•	•	•			•	•	•	•
Tura	•			•	•		•	•**	•		•
Veranda	•			•	•	•	•		•		•
Veronica	•			•	•	•	•		•		•
Victoria	•	•			•	•	•	•	•	•	•

* Solo para modelos con tapa A341780..4 y A341782..4 / Only for models with cover A341780..4 & A341782..4

** No compatible con las referencias A341232... y A34124K... / Not compatible with references A341232... and A34124K...

Mecanismos universales / Universal mechanisms

Compatibilidad mecanismos universales / Universal mechanisms compatibility

	JUEGOS COMPLETOS / VALVE KITS	DESCARGA / FLUSH VALVE				ALIMENTACIÓN / FILL VALVE		PULSADORES / PUSH BUTTONS			
	Kit de mecanismos para tanque con doble pulsador / Mechanisms kit with dual push button	D2 Doble descarga / D2 Dual flush	D2Doble descarga + pulsadores / D2 dual flush + push buttons	D2 Doble descarga / D2 dual flush	D4 Doble descarga / D4 Dual flush	Inferior plástico / Bottom inlet plastic	Lateral plástico / Side inlet plastic	Pulsador ø48 para D8 / D8 push button ø48	Pulsador ø58 para D8 / D8 push button ø58	Pulsador corto D2-D4 / Short push button D2-D4	Pulsador largo D2-D4 / Long push button D2-D4
											
	AH0004900R	AH0003400R	AH0000400R	AH0004800R	AH0000100R	A822508900	A822508800	AH0011200R	AH0011300R	AH0001800R	AH0001700R
	69,60	31,50	57,00	31,50	35,10	-	16,90	14,50	14,50	13,30	14,00
Access							•	•(*)			
Aquaria						•					
America	•	•	•			•		•(*)			•
Beyond					•	•		•(*)		•	
Carmen**						•					
Civic		•	•				•	•(*)			•
Dama-N					•		•			•	
Dama					•	•	•	•(*)			•
Dama CPT					•	•	•	•(*)		•	
Dama Retro******		•	•			•		•(*)		•	
Dama Senso	•	•	•			•		•(*)			•
Dama Senso CPT****				•			•	•(*)		•	
Debba					•	•	•	•(*)		•	
Element				•		•		•(*)			•
Frontalis		•	•			•		•(*)			
Georgia						•		•(*)			
Giralda		•	•			•		•(*)		•	
Hall				•		•		•(*)		•	
Happening				•		•		•(*)			•
Inspira					•	•		•(*)		•	
Khroma						•					
Liberty						•		•(*)			
Meridian	•	•	•		• (*****)	•		•(*)			•
Meridian-N					•	•		•(*)			•
Meridian-N CPT					•	•		•(*)			
Meridian-N Mov. red.					•	•		•(*)			
Ona						•	•		•		
Sidney	•	•	•			•		•(*)			•
The Gap					•	•	•	•(*)			•
The Gap CPT***						•	•	•(*)		•	
Tura						•			•		
Veranda		•	•			•		•(*)			•
Veronica		•	•			•		•(*)		•	
Victoria*******		•	•			•	•	•(*)		•	

* Solo para modelos con la nueva descarga D8 instalados. / Only models intalled with the new D8 flush valve installed
** Mecanismo completo para la serie Carmen A822893800 / Mechanisms kit complet for Carmen A822893800
*** Mecanismo de descarga para la series Gap compacto AH0003000R / Flush valve for Gap Compacto AH0003000R
***** Solo para Meridian-N compacto / Only for Meridian-N Compact
**** Juego de mecanismos completo doble pulsador AH0005800R / Mechanisms kit with dual push button AH0005800R
****** Juego de mecanismos completo doble pulsador AH0004200R / Mechanisms kit with dual push button AH0004200R
******* Otros mecanismos: A822043101 conjunto pulsador antirrobo para descarga D2D, Mecanismo de descarga D2P con tirante para pulsador enrasado AH0003200R y Mecanismo de descarga D2P con pulsador enrasado AH0000500R / Other Mechanisms: A822043101 flush anti-theft push button set D2D, Flush valce D2P with flush pushbutton strap AH0003200R and Flush valv D2P with flush pushbutton AH0000500R

Recambios originales mecanismos / Original mechanisms spare parts

de cisternas vigentes y no vigentes / current and non-current tank



47 48 49 50 13 / 13A 14 15 16 17 18 19 20 21 22

	Mecanismo descarga / Flush valve			€
47	Mecanismo doble descarga PLUS / Dual flush valve plus		**A822505500**	-
48	Mecanismo descarga simple / Single flush valve		**A822502200**	32,60
49	Mecanismo doble descarga accionado por cable / Cable dual flush valve plus		**A822505700**	43,00
50	Mecanismo electrónico EM1 de doble descarga / Electronic mechanisms EM-1		**A822599900**	-
13	Mecanismo descarga D1D + Pulsador corto + Pulsador largo / Flush valve d1d + long and short push buttons		**AH0002400R**	58,70
13A	Mecanismo descarga D2D + Pulsadores / Flush valve D2D + flat push button		**AH0000400R**	57,00
18	Mecanismo descarga D2P + Pulsador enrasado / Flush valve D2D + flat push button		**AH0000500R**	39,70
17 22	Mecanismo descarga D3T + Tirador no interrumpible + Tirante guía / Flush valve D3T + pull handle		**AH0000600R**	39,20
15 20	Mecanismo descarga D4T + Tirador interrumplible + Tirante guía / Flush valve D4T + start stop pull handle + pull handle		**AH0000800R**	32,10
14	Mecanismo descarga D1P + Pulsadores elevados corto y largo / Flush valve d1p + long and short push buttons		**AH0000700R**	56,10
13	D1D para doble pulsador (varilla recortable) / Flush valve D1D + push button loing and short (trimmable rod)		**AH0003600R**	32,30
13A	D2D para doble pulsador (varilla roscable) / Dual flush valve D2D for dual button		**AH0003400R**	31,50
13	D2D NR 40 para doble pulsador / Dual flush valve D2D NR40 for dual button		**AH0004800R**	31,50
13	D4D mecanismo descarga / Dual flush valve D4D		**AH0000100R**	35,10
14	D1P con tirante guía para pulsador enrasado y elevado / Flush valve D1P + flat pull handle		**AH0003300R**	31,00
15	D4T tirador interrumpible / Flush valve D4T start stop	Victoria	**AH0003800R**	27,40
16	Mecanismo descarga D1T sin tirador / Flush valve D1T without pull handle	Meridian, Gondola, Lorentina, Carena, Lucerna, Estudio	**AH0003700R**	29,50
	Mecanismo descarga D3T sin tirador / Flush valve D3T without pull handle	Victoria, Dama Retro, Aquaria, Liberty	**AH0003500R**	29,50
18	D2P con tirante para pulsador enrasado	Victoria	**AH0003200R**	29,00
19	Juego completo de mecanismos para tanque de doble pulsador	Victoria	**AH0005900R**	72,00
	Tirante guía / Tie rod guide			
20	Para descarga D4T / Tie rod guide D4T		**AH0005600R**	3,31
21	Para descarga D1T / Tie rod guide D1T		**AH0005200R**	3,13
22	Para descarga D3T / Tie rod guide D3T		**AH0002900R**	3,51



42 43 44 45

	Mecanismos descarga + alimentación / Flush valve + fill valve		€
42	Doble descarga Plus + alimentación inferior compacto / Flush valve plus + bottom inlet compact	**A822505800**	-
43	Doble descarga Plus + alimentación lateral compacto / Flush valve plus + side inlet compact	**A822505900**	-
44	Doble descarga + alimentación inferior compacto / Dual flush + bottom inlet compact	**A822509400**	-
45	Doble descarga + alimentación lateral compacto / Dual flush + side inlet compact	**A822509300**	-

Medidas en mm
Measurements in mm

Recambios originales mecanismos / Original mechanisms spare parts



23 24 25 46 47 48

	Mecanismos alimentación / Fill valve		€
23	A8L entrada inferior / A8L bottom inlet	**A822508900**	-
24	A8L entrada lateral / A8L side inlet	**A822508800**	16,90
25	Vaso flotador del mecanismo alimentación A2I y A2L / Float for A2I and A2L	**AH0005500R**	3,18
46	Mecanismo de alimentación inferior Compacto / Fill valve, bottom inlet Compact	**A822504400**	23,20
47	Mecanismo de alimentación lateral Compacto / Fill valve, side inlet Compact	**A822504300**	19,20
48	Mecanismo de alimentación dual Compacto / Fill valve, side and bottom inlet Compact	**A822509200**	-

Recambios mecanismos necesarios para cisternas Roca fuera de producción / Replacement mechanisms required for discontinued Roca cisterns

Modelos / Models	**Accionamiento Tirador/Pulsador /** Activation Handle/ Push Button	**Mecanismo Descarga /** Flush Valve	**Tirante Guía /** Guide Rod	**Mecanismo Alimentación /** Fill valve	**Fijación junta Taza/Tanque /** Seal Fixing Bowl/ Tank
Lorentina (desde 1973) / Lorentina (since 1973)	30	16	19	23	28
Dual (Lucerna / Estudio)	12	16	19	24	28
Carena	11	16	19	24	
Gondola (tirador)(1) / Gondola (handle)(1)	11	16	19	23	26
Gondola (pulsador elevado) / Gondola (elevated push button)	7	14		23	26
Victoria (tirador no interrumpible)(1)) / Victoria (non-interruptible handle)(1)	10	17	20	24	27
Victoria (tirador interrumpible)(1) / Victoria (interruptible handle)(1)	9	15	18	24	27
Victoria (pulsador elevado) / Victoria (elevated push button)	6	14		24	27
Aquaria (tirador) / Aquaria (handle)	10	17	20	23	26
Atlanta (tirador / pulsador elevado) / Atlanta (handle / elevated push button)	8	14		24	26
Atlanta (pulsador enrasado) / Atlanta (flush push button)	5	14		24	26
Dama Retro (tirador)(1) / Dama Retro (handle)(1)	10	17	20	23	26
Dama Retro (pulsador elevado) / Dama Retro (elevated push button)	6	14		23	26
Dama Retro (pulsador enrasado) / Dama Retro (flush push button)	3	14		23	26
Columbia	1	13		23	26
Meridian (tirador)(1) / Meridian (handle)(1)	10	16	19	23	26
Meridian (pulsador elevado) / Meridian (elevated push button)	7	14		23	26
Meridian (pulsador enrasado) / Meridian (flush push button)	4	14		23	26
Liberty (tirador) / Liberty (handle)	10	17	20	23	26
Liberty (pulsador elevado) / Liberty (elevated push button)	6	14		23	26
Liberty (pulsador enrasado) / Liberty (flush push button)	3	14		23	26
Liberty (doble pulsador) / Liberty (dual push button)	2A			23	26
Veronica (pulsador elevado) / Veronica (elevated push button)	6	14		23	26
Veronica (pulsador enrasado) / Veronica (flush push button)	3	14		23	26
Sidney (pulsador enrasado) / Sidney (flush push button)	4	14		23	26
Georgia (pulsador enrasado) / Georgia (flush push button)	4	14		23	26
Georgia (doble pulsador) / Georgia (dual push button)	1A	13A		23	26

(1) Estos modelos de tirador, también admiten el pulsador elevado de su misma serie. /
(1) These handle models also admit the elevated push button of the same series.

Recambios Destacados / Featured Spare parts

1 **AH00112..R** **AH00210..R**



ø48

2 **AH00113..R** **AH00211..R**



ø58

3 **AV0066000R**



4 **AV0066100R**



5 **AV0066100R**



6 **AV0015100R**



7 **AV0007700R**



8 **AV0007800R**



9 **AV0009300R**



10 **AV0065500R**



11 **AV0012400R** **A890805400**



12 **AV0069600R**



13 / 14 / 15 / 16 / 17 / 18 **AV0067.00R**



19 **AV00693B0R**



20 / 21 / 22 / 23 / 24 / 25 **AV0068.00R**



26 **AV00693NBR**



			€
1	**AH0011200R**	Chrome	14,50
	AH00112NBR	Matte Black	18,70
	AH00112B0R	Matte White	18,90
	AH00112CNR	Titanium	18,90
	AH00112NMR	Brushed Titanium	18,90
	AH00112RGR	Shiny Rose Gold	18,90
	AH00112VAR	Brushed Gold	18,90
	AH00112RMR	Brushed Copper	-
	AH00112GMR	Brushed Graphite	-
	AH0021000R	Anti-vandal Chrome	-

			€
2	**AH0011300R**	Chrome	14,50
	AH00113NBR	Matte Black	18,70
	AH00113B0R	Matte White	18,90
	AH00113CNR	Titanium	18,90
	AH00113NMR	Brushed Titanium	18,90
	AH00113RGR	Shiny Rose Gold	18,90
	AH00113VAR	Brushed Gold	18,90
	AH00113RMR	Brushed Copper	-
	AH00113GMR	Brushed Graphite	-
	AH0021100R	Anti-vandal Chrome	-
3	**AV0066000R**		6,80
4	**AV0066100R**		6,80
5	**AV0015100R**		6,80
6	**AV0007900R**		14,60
7	**AV0007700R**		14,60
8	**AV0007800R**		8,11
9	**AV0009300R**		42,70
10	**AV0065500R**		11,00

					€
11	**AV0012400R**	180 mm			34,80
	A890805400	260 mm			33,70
12	**AV0069600R**				44,40
13	**AV0067100R**	H3/8 – H3/8	300 mm		4,21
14	**AV0067200R**	H3/8 – H1/2	300 mm		4,33
15	**AV0067300R**	H1/2 – H1/2	300 mm		4,58
16	**AV0067700R**	H3/8 – H3/8	300 mm		2,83
17	**AV0067800R**	H3/8 – H1/2	300 mm		2,94
18	**AV0067900R**	H1/2 – H1/2	300 mm		3,08
19	**AV00693B0R**				3,65
20	**AV0068000R**	H3/8 – H3/8	500 mm		2,58
21	**AV0068100R**	H3/8 – H1/2	500 mm		2,68
22	**AV0068200R**	H1/2 – H1/2	500 mm		2,83
23	**AV0068600R**	H3/8 – H3/8	500 mm		2,89
24	**AV0068700R**	H3/8 – H1/2	500 mm		2,97
25	**AV0068800R**	H1/2 – H1/2	500 mm		3,12
26	**AV00693NBR**				3,65

Toda factura tendrá el recargo del I.V.A.
La presente tarifa anula las anteriores

Fijaciones y otros recambios / Fixations and other spare parts

	CODOS DE EVACUACIÓN / EVACUATION ELBOW			**FIJACIONES TANQUE TAZA /** CISTERN-PAN FIXATION KIT							**FIJACIONES /** FIXATIONS	
	Codo de evacuación 90° / Elbow wall 90°	Codo de evacuación 45° / Elbow wall 45°	Conexión descarga / Flush connector	Kit de fijación taza tanque / Fixation kit cistern-pan	Kit de fijación taza tanque / Fixation kit cistern-pan	Kit de fijación taza tanque btw / Fixation kit cistern-pan btw	Kit de fijación taza tanque / Fixation kit cistern-pan	Kit de fijación taza tanque / Fixation kit cistern-pan	Kit de fijación taza tanque / Fixation kit cistern-pan	Kit de fijación taza tanque / Fixation kit cistern-pan	Juego de fijación Tanque a pared / Fixation set cistern to wall	Juego de fijación Taza a pared / Fixation set pan to wall
											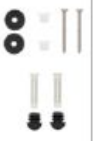	
	AV0007900R	**AV0007700R**	**AV0014900R**	**AV0020300R**	**AV0008000R**	**AV0028800R**	**AV0012500R**	**AV0013200R**	**AV0007300R**	**AV0007400R**	**AV0014700R**	**A822045400**
	14,60	14,60	49,10	6,02	6,69	17,30	5,94	13,70	6,52	6,13	8,61	8,55
Access												
Aquaria												
America	•				•							
Beyond		•										
Carmen	•	•										
Civic												
Dama-N												
Dama	•						•					
Dama CPT		•						•				
Dama Retro					•							
Dama Senso					•							
Dama Senso CPT									•			
Debba												
Element	•			•								
Frontalis	•											
Georgia					•							
Giralda					•							
Hall		•		•								
Happening		•		•								
Inspira	•	•				•						•
Khroma		•										
Liberty					•							
Meridian					•							
Meridian-N				•								
Meridian-N CPT				•								
Meridian-N Mov. red.												
Ona	•	•				•						
Sidney	•				•							
The Gap	•					•	•				•	
The Gap CPT		•	•									
Tura	•					•						
Veranda	•			•								
Veronica	•				•							
Victoria										•		

Fijaciones y otros recambios / Fixations and other spare parts

	FIJACIONES / FIXATIONS											
	Juego fijación a pared del lavabo / Fixation kit to wall	Juego fijación para taza inodoro y bidé / Fixation kit pan and bidet	Kit de fijación taza- suelo victoria / Fixation kit pan-floor victoria	Juego de fijación a suelo 75mm para inodoro tanque alto / Fixation kit to floor 75mm	Juego de fijación a suelo 45mm para inodoro tanque alto / Fixation kit to floor 45mm	Juego de fijaciones de cisterna adosada a pared / Fixation kit to wall	Juego de fijaciones semipedestal / Fixation kit semipedestal	Juego de fijación para lavabo de semiempotrar / Fixation kit for wash basing wall hung	Juego de fijación codo a pared / Elbow fixation kit	Manguito conector D40 / Connector sleeve D40	Tapón embellecedor / Chroming blanking plug	Enchufe unión / Plug connector
												
	AV0007500R	AV0007600R	AV0007200R	AV0026800R	AV0009400R	AV0038000R	AV0015900R	AV0010900R	AV0013100R	AV0013400R	AV0012600R	AV0016200R
	5,51	3,80	2,72	9,95	6,16	15,30	8,02	5,53	3,46	6,03	2,54	2,63
Access	•											
Aquaria												
America	•	•										
Atlanta												
Beyond				•	•	•			•	•		
Carmen					•						•	
Civic	•				•						•	
Dama-N												
Dama	•	•			•		•	•			•	•
Dama CPT	•				•				•	•	•	
Dama Retro	•	•										
Dama Senso	•	•					•					
Dama Senso CPT	•	•					•				•	
Debba	•				•		•				•	•
Element	•	•										
Frontalis	•	•								•		
Georgia												
Giralda	•	•					•	•				
Hall	•	•					•		•	•		
Happening	•	•					•		•	•		
Inspira				•					•			
Khroma	•	•										
Liberty												
Meridian	•	•					•					
Meridian-N												
Meridian-N CPT												
Meridian-N Mov. red.												
Ona												
Sidney	•	•					•					
The Gap	•				•		•			•	•	•
The Gap CPT	•								•		•	
Tura												
Veranda	•	•					•					
Veronica	•	•					•					
Victoria	•		•								•	

Pulsadores, tiradores, fijaciones y juntas / Push buttons, pull handles, fixations and gaskets



1 2 1A 2A 2B



3 4 5

Conjunto doble pulsador 6/3 litros (tapa 40 ø) / Dual push button kit 6/3 liters (lid hole ø40)

			€
1	Conjunto pulsador largo varilla recortable para doble descarga D1D / Long push button kit with trimmable rods for D1D	**AH0002000R**	14,50
2	Conjunto pulsador corto varilla recortable para doble descarga D1D / Short push button kit with trimmable rods for D1D	**AH0002100R**	13,80
1A	Conjunto pulsador largo varilla roscable para doble descarga D4D y D2D / Long push button for D4D and D2D flush valve	**AH0001700R**	14,00
2A	Conjunto pulsador corto varilla roscable para doble descarga D4D y D2D / Short push button for D4D and D2D flush valve	**AH0001800R**	13,30
2B	Conjunto pulsador antivandálico para descarga D2D / Push button D2D anti-theft	**A822043101**	14,00

Conjunto pulsador enrasado (tapa 40 ø) / Flat push button kit (lid hole ø40)

				€
3	Para descarga D1P y D2P / For D1P and D2P flush valve	Victoria, Dama Retro, Veronica, Liberty	**AH0001600R**	12,40
4	Para descarga D1P / For D1P flush valve	Meridian, Sidney, Georgia	**AH0005000R**	13,80
5	Para descarga D1P / For D1P flush valve	Atlanta	**AH0007700R**	13,00

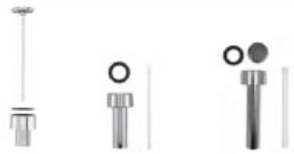

6 7 8



9 10 11 12

Conjunto pulsador elevado (tapa 27 ø) Raised push button (hole ø27)

				€
6	Para descarga D1P y D2P / For D1P and D2P flush valve	Victoria, Dama Retro, Aquaria, Veronica, Liberty	**AH0002200R**	13,50
7	Para descarga D1P / For D1P flush valve	Meridian, Gondola	**AH0005100R**	14,00
8	Para descarga D1P / For D1P flush valve	Atlanta	**AH0006500R**	14,00

Conjunto tirador / Pull handle kit

				€
9	Interrumpible para descarga D4T / For D4T flush valve start - stop	Victoria	**AH0002300R**	8,00
10	No interrumpible para descarga D3T / For D3T flush valve	Victoria, Aquaria, Dama Retro, Liberty	**AH0001900R**	8,43
10	No interrumpible para descarga D1T / For D1T flush valve	Meridian	**AH0001900R**	8,43
11	No interrumpible para descarga D1T / For D1T flush valve	Carena, Gondola	**AH0006200R**	26,80
12	Para descarga D1T / For D1T flush valve	Dual, Estudio	**AH0004700R**	12,60





Conjunto pulsador mecanismo de descarga plus ø 48 y ø 58 / Plus flush valve push button kit ø 48 y ø 58

			€
ø40 agujero de tapa / ø 40 cover hole	Cromado / Chrome	**AH0011200R**	14,50
	Titanio brillante / Shiny titanium	**AH00112CNR**	18,90
	Oro rosa brillante / Rose gold	**AH00112RGR**	18,90
	Negro cepillado / Brushed Black	**AH00112NMR**	18,90
	Oro cepillado / Brushed gold	**AH00112VAR**	18,90
	Negro mate / Matt black	**AH00112NBR**	18,70
	Blanco mate / White matt	**AH00112B0R**	18,90

Conjunto pulsador mecanismo de descarga plus ø 48 y ø 58 / Plus flush valve push button kit ø 48 y ø 58

			€
ø50 agujero de tapa / ø 50 cover hole	Cromado / Chrome	**AH0011300R**	14,50
	Titanio brillante / Shiny titanium	**AH00113CNR**	18,90
	Oro rosa brillante / Rose gold	**AH00113RGR**	18,90
	Negro cepillado / Brushed Black	**AH00113NMR**	18,90
	Oro cepillado / Brushed gold	**AH00113VAR**	18,90
	Negro mate / Matt black	**AH00113NBR**	18,70
	Blanco mate / White matt	**AH00113B0R**	18,90



Pulsador para mecanismo por cable / Cable flush valve push button

		€
Cable plus	**AH0017400R**	20,50

Medidas en mm
Measurements in mm

Pulsadores, tiradores, fijaciones y juntas /
Push buttons, pull handles, fixations and gaskets



59 60 61 62 63 64 65 26 27 28

	Fijaciones y junta taza-tanque / Fixations and joint cister - pan			€
59	Kit de fijación taza tanque / Fixation kit cistern - pan		**AV0020300R**	6,02
60	Kit de fijación taza tanque btw / Fixation kit cistern - pan BTW		**AV0028800R**	17,30
61	Kit de fijación taza tanque / Fixation kit cistern - pan		**AV0012500R**	5,94
62	Kit de fijación taza tanque / Fixation kit cistern - pan		**AV0013200R**	13,70
63	Kit de fijación taza tanque / Fixation kit cistern - pan		**AV0014700R**	8,61
64	Kit de fijación de taza tanque bajo a pared / Fixation kit to wall		**A822045400**	8,55
65	Kit de fijación taza tanque / Fixation kit cistern - pan		**AV0007300R**	6,52
26	Fijaciones y junta taza tanque / Fixation kit cistern - pan	America, Liberty, Veronica, Georgia, Sidney, Meridian, Dama Senso, Dama Retro, Giralda	**AV0008000R**	6,69
27	Fijaciones y junta taza tanque / Fixation kit cistern - pan	Victoria	**AV0007400R**	6,13
28	Fijaciones y junta taza tanque / Fixation kit cistern - pan	Dual, Lorentina	**AV0019800R**	8,44



30 31 32 33

	Recambios mecanismos / Mechanisms spare parts				€
30	Conjunto manecilla descarga tanque / Kit flush handle	Lorentina		**AH0007400R**	78,70
31	Varilla válvula tanque bajo / Rod connector for flush handle	Lucerna / Lorentina		**A522471003***	2,27
32	Válvula flotadora / Fill valve float	Lucerna / Lorentina		**AH0002500R***	4,71
33	Membrana mecanismo alimentación de varilla / Fill valve diaphragm		1 unidad / unit	**AH0016100R**	1,35
			3 unidades / units	**AH0001500R**	2,93

* Descarga anterior a 1973 / Flush valve before 1973



35 36 37 38 D8 39 40 41

	Juntas para mecanismos de descarga / Flush valve mechanisms joints			€
35	Junta cierre D1T, D1P, D3T / Flush valve seal D1T, D1P and D3T	23 x 75	**AH0006900R**	2,60
36	Junta cierre D2P / Flush valve seal D2P	32 x 68	**AH0007000R**	2,60
37	Junta cierre D1D y D2D doble pulsador Dual flush valve seal D1D and D2D	16 x 66	**AH0007100R**	2,74
38	Junta de estanqueidad tronco cónica / Conic gasket		**AH0007200R**	1,72
35 36 37 38	Juego de juntas / Seal joints kit		**AH0001400R**	8,28
	Junta de cierre D8 / D8 flush valve seal		**AH0011400R**	6,42
	Junta de cierre mecanismo por cable plus / Cable flush valve seal		**AH0017500R**	6,44

	Varillas y tapón / Rods and plug		€
39	Varilla del pulsador elevado / enrasado 15 unidades / Push button rod / 15 units	**AH0000300R**	11,20
40	Varilla del doble pulsador (1 unidad) / Push button rod (1 unit)	**AH0016000R**	1,46
41	Tapón embellecedor para cisternas de alimentación lateral y lavamanos Dama Senso compacto / Trim cap for lateral fill cisterns Dama Senso compact	**AV0012600R**	2,54

Medidas en mm
Measurements in mm

Fijaciones, juntas y codos de evacuación / Fixations, gaskets and pipe connectors



66 67 68 69



70 71 72 73 74

	Otras fijaciones / Other fixations		€
66	Juego fijación a pared del lavabo / Fixation kit cistern	**AV0007500R**	5,51
67	Juego fijación para taza inodoro y bidé / Fixation kit pan and bidet	**AV0007600R**	3,80
68	Kit de fijación taza- suelo victoria / Fixation kit pan -floor victoria	**AV0007200R**	2,72
69	Juego de fijación a suelo 75mm para inodoro tanque alto / Fixation kit to floor 75mm	**AV0026800R**	9,95

	Otras fijaciones / Other fixations		€
70	Juego de fijación a suelo 45mm para inodoro tanque alto / Fixation kit to floor 45mm	**AV0009400R**	6,16
71	Juego de fijaciones de cisterna adosada a pared / Fixation kit to wall	**AV0038000R**	15,30
72	Juego de fijaciones semipedestal / Fixation kit semipedestal	**AV0015900R**	8,02
73	Juego de fijación para lavabo de semiempotrar / Fixation kit for wash basin wall hung	**AV0010900R**	5,53
74	Juego de fijación codo a pared / Elbow fixation kit	**AV0013100R**	3,46



56 57 58



51 52 53

	Codos / Elbows		€
56	Codo de evacuación 90° / Elbow wall 90°	**AV0007900R**	14,60
57	Codo de evacuación 45° / Elbow wall 45°	**AV0007700R**	14,60
58	Conexión descarga / Flush connector	**AV0014900R**	49,10

	Enchufes / Plug connector				€
51	Tazas tanque alto, tazas suspendidas y vertedero Garda / Back to wall bowl and Garda weir		55 x 32	**AV0016200R**	2,63
52	Taza tanque alto / High cistern bowl	Lucerna / Lorental	49 x 32	**AV0016700R**	2,27
53	De plástico para taza / High cistern bowl	Estudio	70 x 40	**A523362507**	3,04
	Urinario Mini (1 unidad)			**AV0016300R**	3,10



54 55 82 83



80 81

	Manguitos / Sleeves			€
54	Manguito recto de 120 / Straight sleeve 120	Para tazas salida vertical / For vertical outlets bowls	**AV0007800R**	8,11
55	Manguito excéntrico de 80 / Eccentric sleeve 80	Para salida vertical y empotrado en el suelo / For vertical outlets and floor embedded	**AV0015100R**	6,80
	Manguito excéntrico de 40 mm / Outlet pipe eccentric 40 mm		**AV0066100R**	6,80
	Manguito excéntrico de 20 mm/ Outlet pipe eccentric 20 mm		**AV0066000R**	6,80
82	Tubos de conexión inodoro suspendido 180 / Wall hung connection pipes 180	Con sistema de instalación / With instalation system	**AV0012400R**	34,80
82	Tubos de conexión inodoro suspendido 260 / Wall hung connection pipes 260	Con sistema de instalación / With instalation system	**A890805400**	33,70
83	Tubo de conexión inodoro suspendido 300 / Wall hung connection pipe 300		**AV0047300R**	18,80

	Tubo flexible / Flexible tube		€
80	Tubo de conexión PLUS con longitud ajustable de 290 a 600 mm / PLUS Connection tube with adjustable length from 290 to 600mm	**AV0065500R**	11,00
81	Tubo de conexión con longitud ajustable de 290 a 600 mm / Connection tube with adjustable length from 290 to 600mm	**A890068000**	20,20

Medidas en mm
Measurements in mm

Recambios originales/
Original spare parts

EM1

A822599900

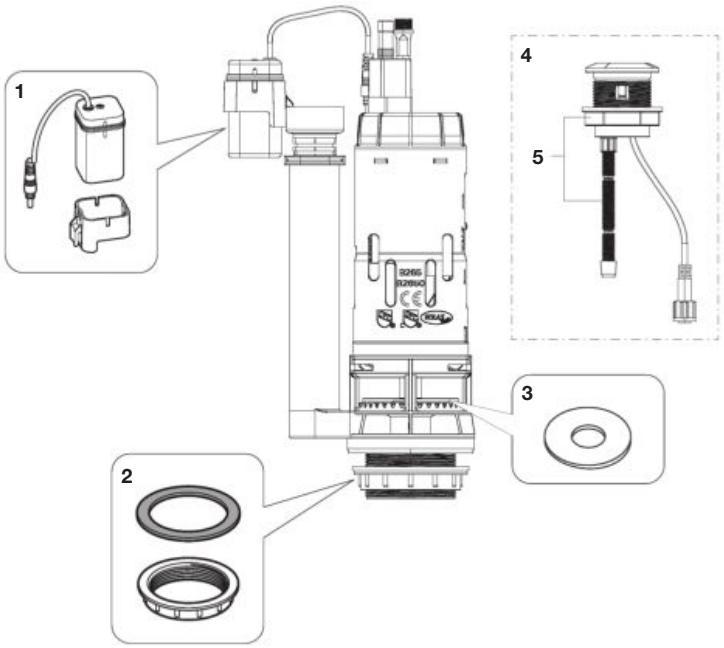

		€
1	**AH0015300R**	7,30
2	**AH0015500R**	2,74
3	**AH0015400R**	2,91
4	**AH0015600R**	44,10
5	**AH0015700R**	2,24

Inspira Square / Round

Asiento y tapa inodoro Round / Round toilet seat & cover

A801522..B	STANDARD
A80152C..B	COMPACT
A801522..2	STANDARD COMFORT

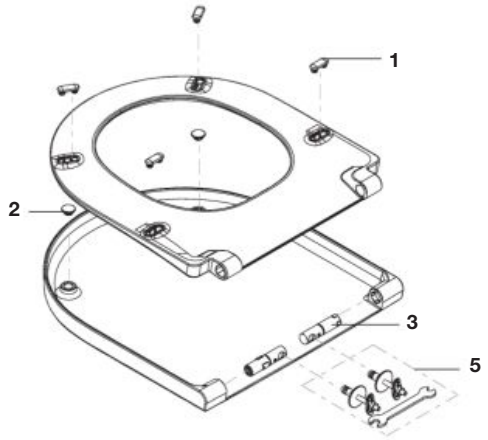

Asiento y tapa inodoro Square / Square toilet seat & cover

A801532..B	STANDARD

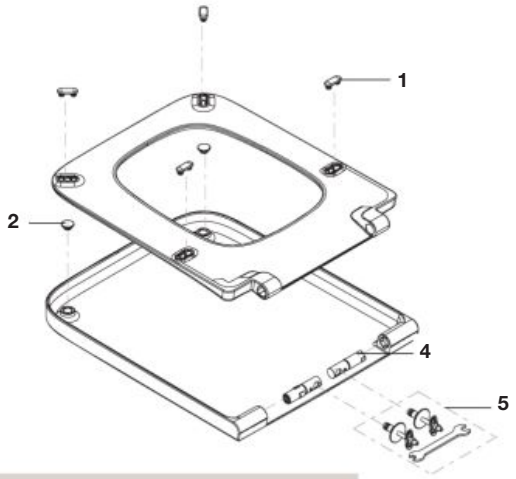

Atención a la versión de las bisagras. La imagen A corresponde a la versión de bisagras antiguas que contienen la junta (mirar flecha). La imagen B corresponde a las versión de bisagras nuevas. Atención recambios específicos de cada versión.
Attention to hinges version. If it is like image A, hinges are the older version which have gasket (view arrow). If it is like image B, hinges are the new version. Attention to specific spare parts of each version.

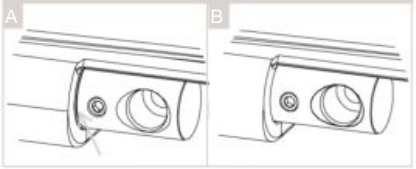

Tapa bidé / Bidet cover

A806522..B	ROUND STANDARD
A806532..B	SQUARE STANDARD

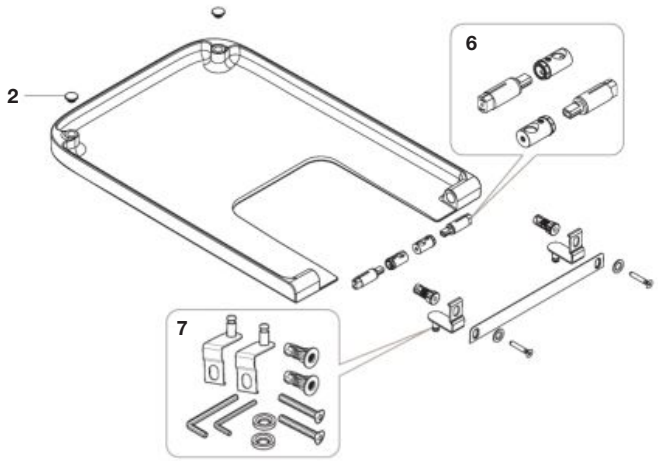

Sustituir (..) de la referencia por el código de color elegido:
In the product reference replace (..) with the code for the selected finish code:

00 Blanco / White
62 Blanco mate / Matt white
63 Perla / Pearl
64 Onix
65 Beige
66 Café / Coffee

				€
1	4 un	**AI00128..R**		4,76
2	2 un	**AI00002..R**		0,98
3		**AI0012700R**	A Standard	21,80
		AI0012900R	A Compact	21,80
		AI0022100R	B STD+CPT	26,40

			€
4	**AI0013000R**	A	21,80
	AI0022000R	B	26,70
5	**AI0022600R**		13,60
6	**AI0013200R**		21,80
7	**AI0013100R**		22,00

Dama-N

Asiento y tapa inodoro / Toilet seat & cover



A80178C..4	CR	Compact
A80178B..4	CL	Compact

A801782..4	CR
A801780..4	CL

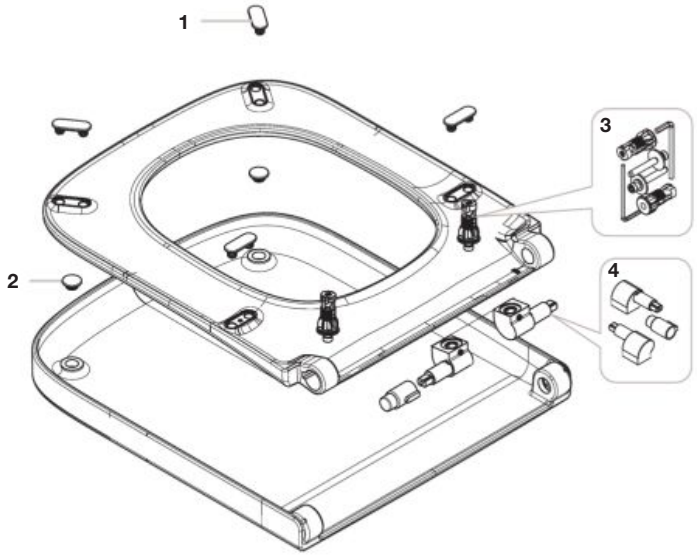

Tapa bidé / Bidet cover



A80678C..4	CR	Compact
A80678B..4	CL	Compact

A806782..4	CR
A806780..4	CL

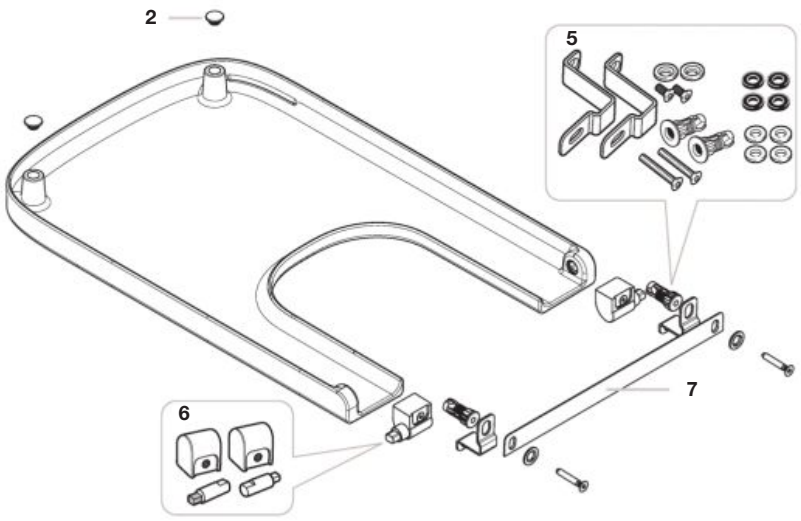

CL: Caída libre / Standard closing
CR: Caída retardada / Soft-closing

Sustituir (..) de la referencia de producto por el código de color elegido:
In the product reference replace (..) with the code for the selected finish code:
00 Blanco / White
17 Pergamon

				€
1	4 un	**AI0009100R**		1,25
		AI0009117R		3,42
2	2 un	**AI0000200R**		0,98
		AI0000217R		1,83
3		**AI0000400R**		5,22
4	1+1	**AI0012000R**	CR	89,90
		AI0012500R	CL	21,80

				€
5		**AI0000700R**		17,70
6	1+1	**AI0000800R**	CR	51,50
		AI0000900R	CL	33,30
7		**AI0001000R**		11,40

Ona

Asiento y tapa inodoro / Toilet seat & cover

A801E10..2	CL	Standard
A801E20..2	CL	Compact

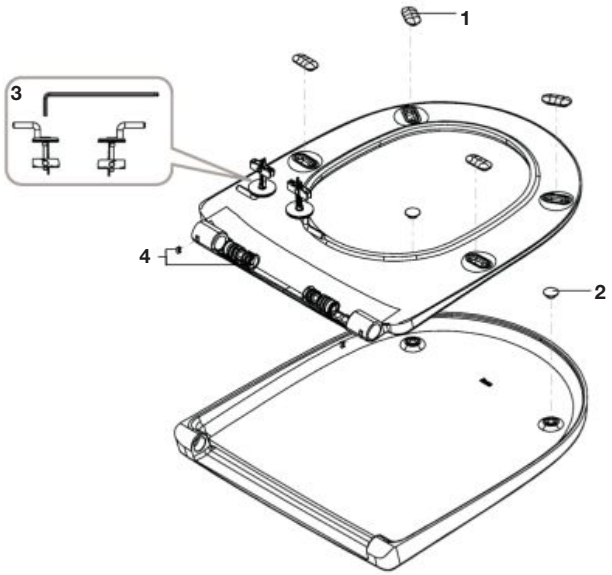

A801E12..2	CR	Standard
A801E22..2	CR	Compact

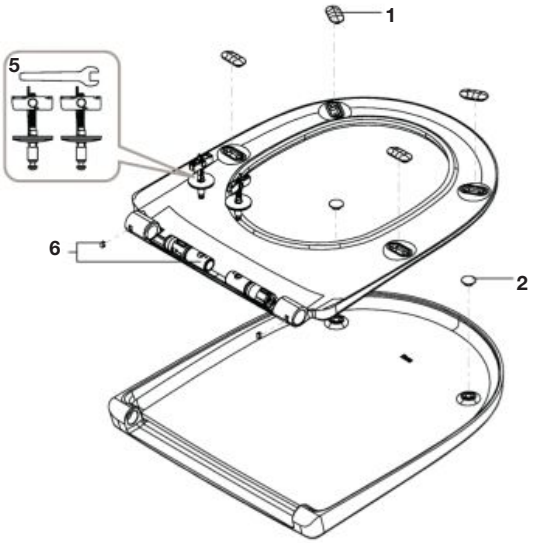

CL: Caída libre / Standard closing
CR: Caída retardada / Soft-closing

			€
1	4 un	**AI0024600R**	3,12
2	2 un	**AI0024700R**	1,18
3	+	**AI0024800R**	9,07
4	+	**AI0024900R**	5,18

				€
5	2 un	**AI0025000R**		9,80
6	+	**AI0025100R**	standard	11,10
		AI0025200R	compact	13,40

Ona

Asiento y tapa inodoro / Toilet seat & cover

A801E10..1	CL	Standard
A801E20..1	CL	Compact

A801E12..1	CR	Standard
A801E22..1	CR	Compact

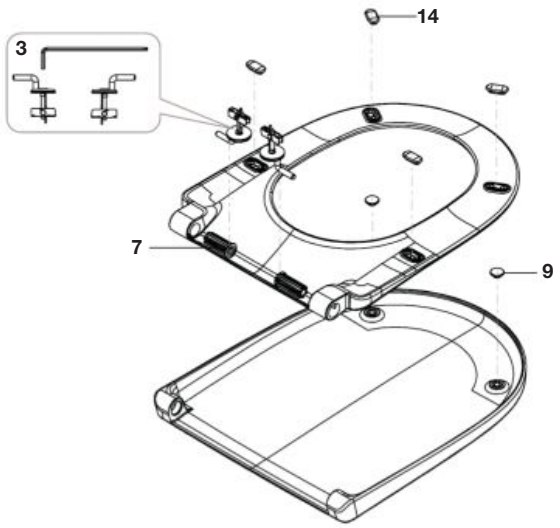

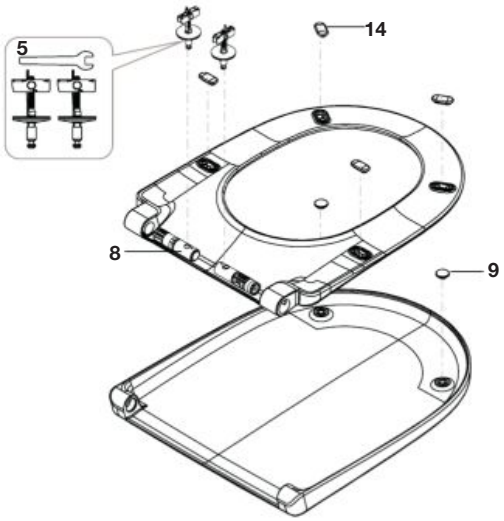

Tapa bidé / Bidet cover

A806E10..1	CL

A806E12..1	CR

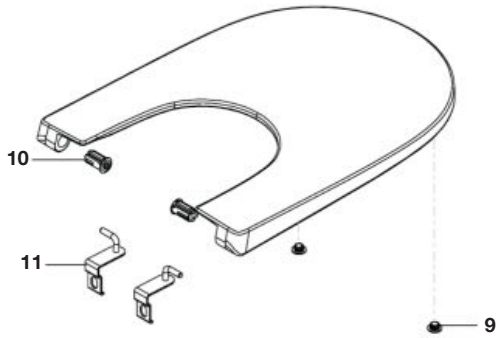

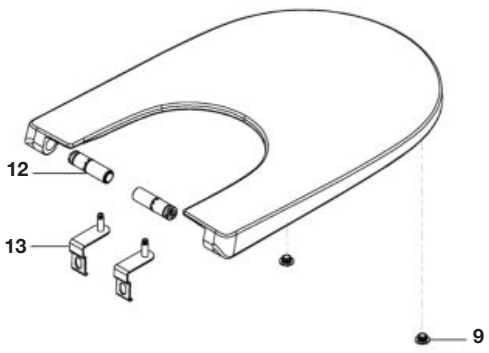

CL: Caída libre / Standard closing
CR: Caída retardada / Soft-closing

Sustituir (..) de la referencia de producto por el código de color elegido:
In the product reference replace (..) with the code for the selected finish code:
00 Blanco / White
08 Negro Mate / Matt Black

				€
3	1+1	**AI0024800R**		9,07
5	2 un	**AI0025000R**		9,80
7	1+1	**AI0025300R**		2,80
8	1+1	**AI0025400R**	standard	8,72
		AI0025500R	compact	8,72
9	2 un	**AI0026300R**		2,68
		AI0026308R		4,94
10	1+1	**AI0025600R**		2,80

			€
11	1+1	**AI0025700R**	22,00
12	1+1	**AI0025800R**	8,72
13	1+1	**AI0025900R**	22,70
14	4 un	**AI0026200R**	3,97
		AI0026208R	7,27

The Gap Square

Asiento y tapa inodoro / Toilet seat & cover



A801732004	CR	Compact
A801730004	CL	Compact

A801472004	CR
A801470004	CL

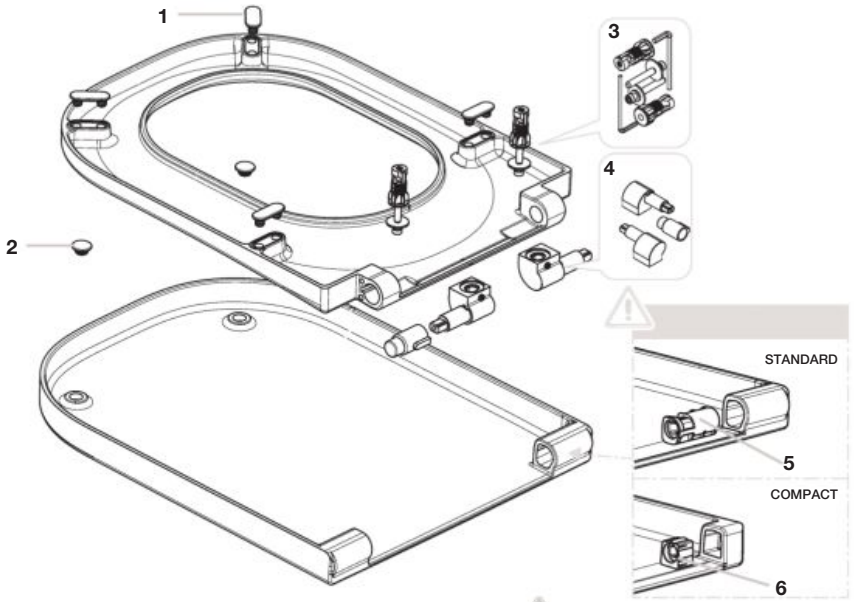

Se recomienda sustituir pieza 5 (modelos standard) y pieza 6 (modelos compact) en los asientos y tapas The Gap anteriores a 2015.

It is recomended to substitute piece 5 (standard models) and piece 6 (compact models) in The Gap seat & covers before 2015.

Tapa bidé / Bidet cover



A806472004	CR
A806470004	CL

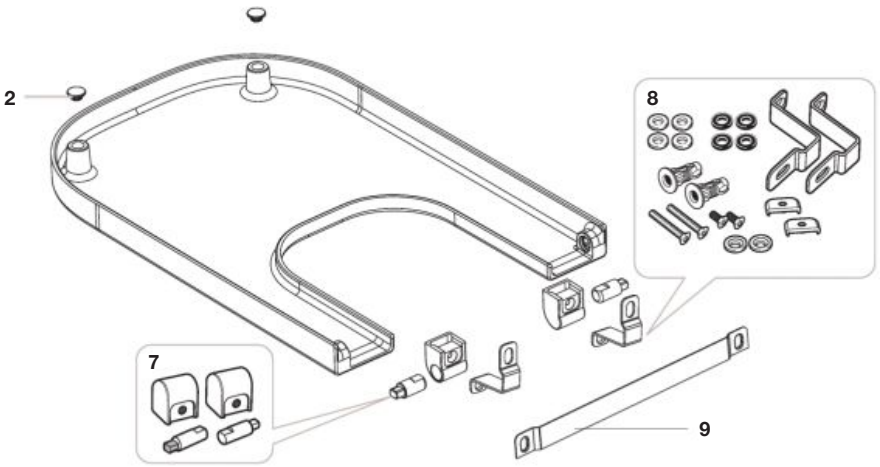

CL: Caída libre / Standard closing
CR: Caída retardada / Soft-closing

				€
1	4 un	**AI0009100R**		1,25
2	2 un	**AI0000200R**		0,98
3		**AI0000400R**		5,22
4		**AI0012400R**	CR	47,90
		AI0012500R	CL	21,80

				€
5		**AI0012300R**		2,27
6				
7		**AI0005000R**	CR	60,00
		AI0005100R	CL	43,00
8		**AI0005200R**		30,50
9		**AI0023700R**		4,73

The Gap Square

Asiento y tapa inodoro / Toilet seat & cover

A801470002	CL	Standard
A801730002	CL	Compact

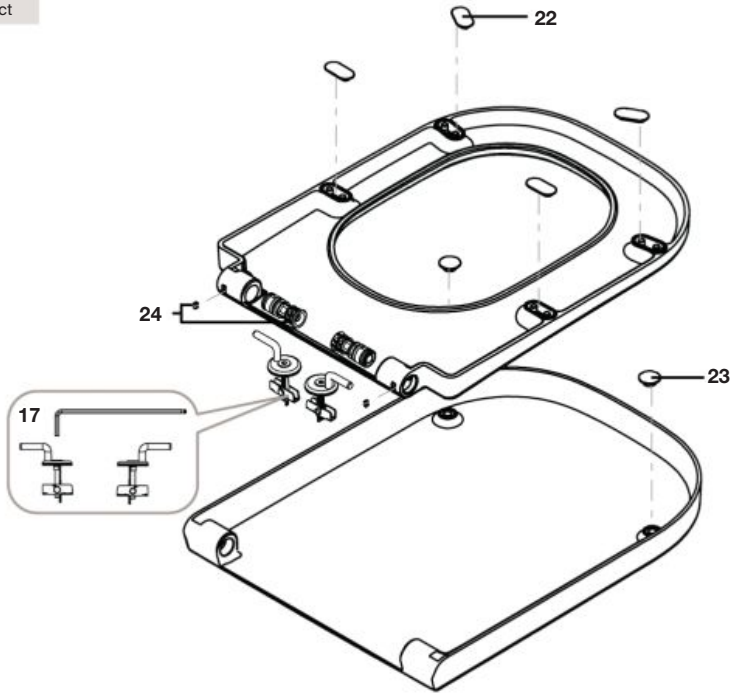

A801472006	CR	Standard
A801732002	CR	Compact

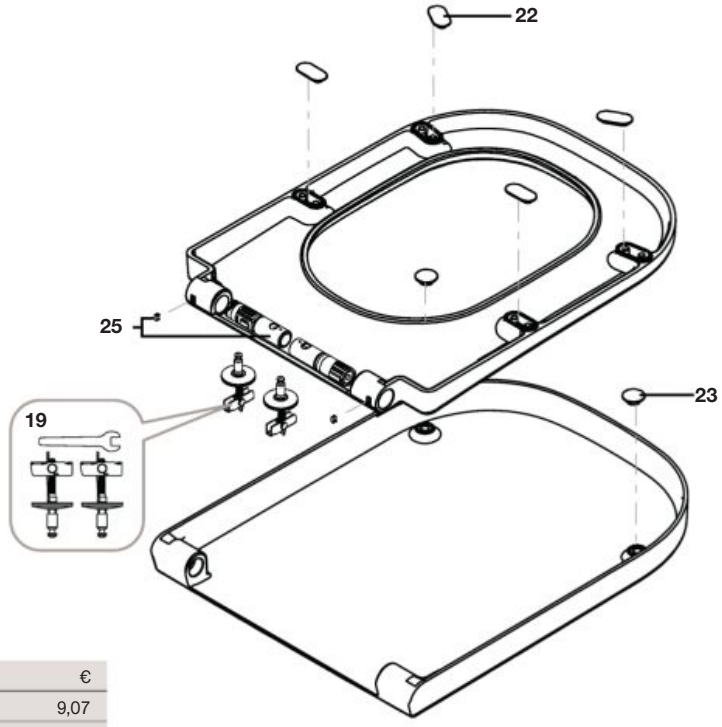

CL: Caída libre / Standard closing
CR: Caída retardada / Soft-closing

				€
17		**AI0024800R**		9,07
19		**AI0025000R**		9,80
22	4 un	**AI0024600R**		3,12
23	2 un	**AI0024700R**		1,18
24	2 un	**AI0024900R**		5,18
25	2 un	**AI0021100R**	standard	8,14
	2 un	**AI0025500R**	compact	8,72

The Gap Square

Asiento y tapa supralit standard para inodoro / Toilet seat & cover supralit standard

A80147000B CL

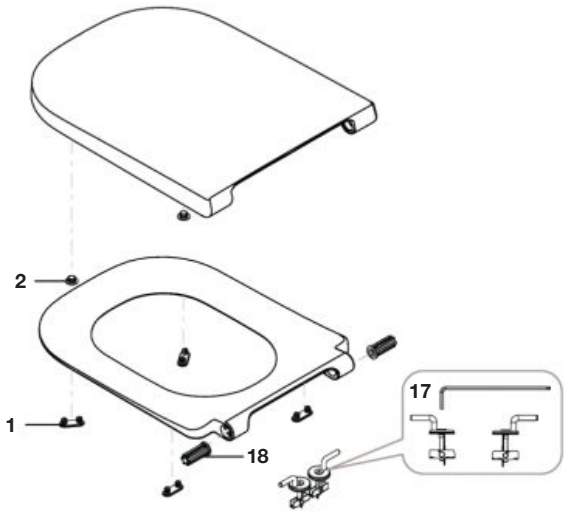

A80147200B CR

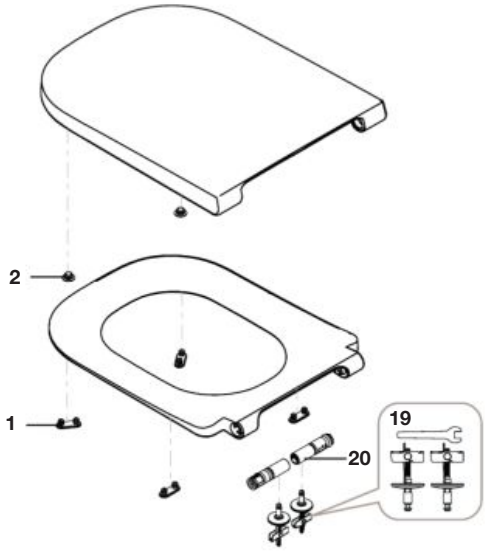

Asiento y tapa supralit compact para inodoro / Toilet seat & cover supralit compact

A80173000B CL

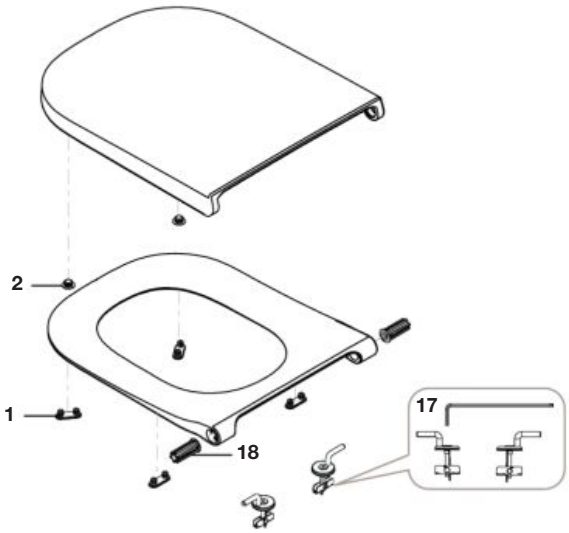

A80173200B CR

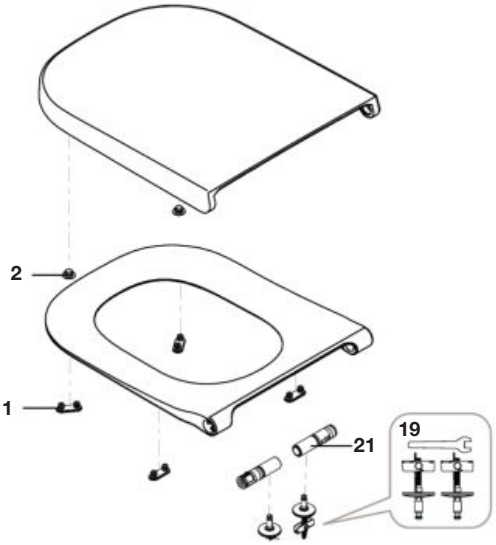

CL: Caída libre / Standard closing
CR: Caída retardada / Soft-closing

			€
1	4 un	**AI0009100R**	1,25
2	2 un	**AI0000200R**	0,98
17		**AI0024800R**	9,07
18	2 un	**AI0025300R**	2,80
19		**AI0025000R**	9,80
20	2 un	**AI0020200R**	67,00
21	2 un	**AI0025100R**	11,10

The Gap Square

Tapa supralit standard para bidé / Bidet cover supralit standard

A80647200B CR

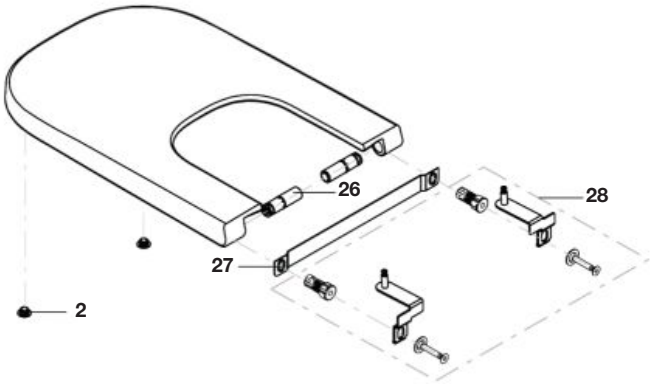

A80647000B CL

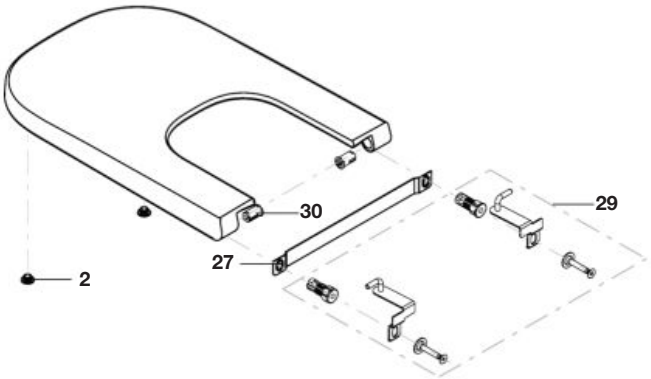

Tapa supralit compact para bidé / Bidet cover supralit compact

A80673200B CR

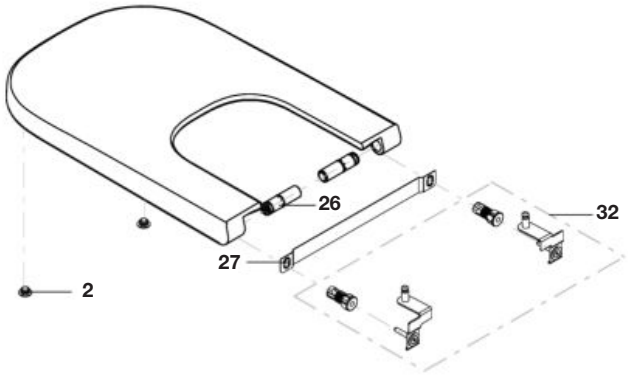

A80673000B CL

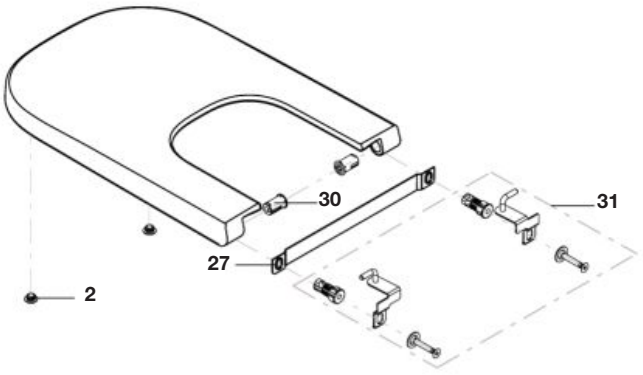

CL: Caída libre / Standard closing
CR: Caída retardada / Soft-closing

			€
2	2 un	**AI0000200R**	0,98
26	+	**AI0026000R**	17,40
27		**AI0023700R**	4,73
28		**AI0026500R**	37,60
29		**AI0026600R**	34,10
30	2 un	**AI0025600R**	2,80
31		**AI0023900R**	39,70
32		**AI0026800R**	36,80

The Gap Round

Asiento y tapa inodoro / Toilet seat & cover



A801D12001	CR	STANDARD
A801D22001	CR	COMPACT

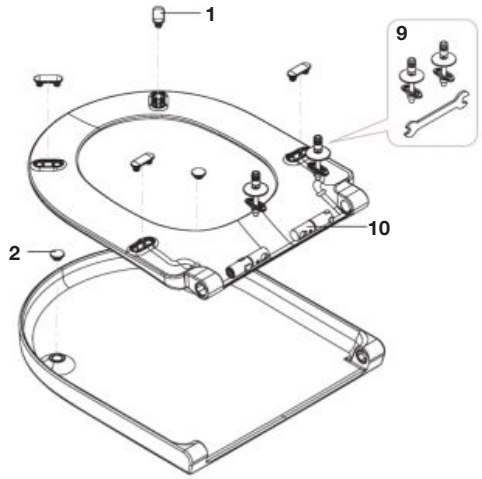

A801D10001	CL	STANDARD
A801D20001	CL	COMPACT

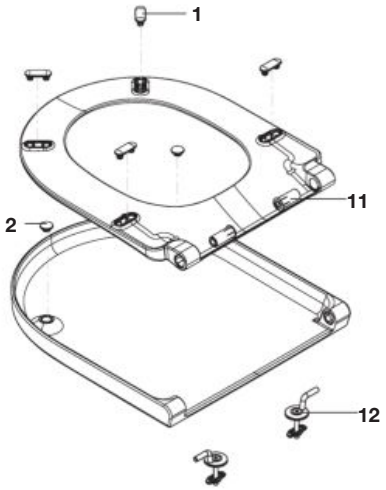

Atención a la versión de las bisagras, fijaciones y casquillos.
La imagen A corresponde a la versión de bisagras (CR) y fijaciones (CL) V5. Hay que coger bisagras, fijaciones y casquillos versión A.
La imagen B corresponde a las versión de bisagras (CR) y fijaciones (CL) V6. Hay que coger bisagras, fijaciones y casquillos versión B.
Attention to hinges, fixings and bushings version. If it is like image A, hinges (CR) and fixings (CL) are the V5 version. You have to take version A of hinges, fixings and bushings. If it is like image B, hinges (CR) and fixings (CL) are the V6 version. You have to take version B of hinges, fixings and bushings.

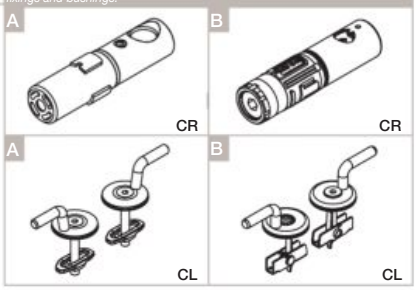

Tapa bidé / Bidet cover

A806D10001	CL

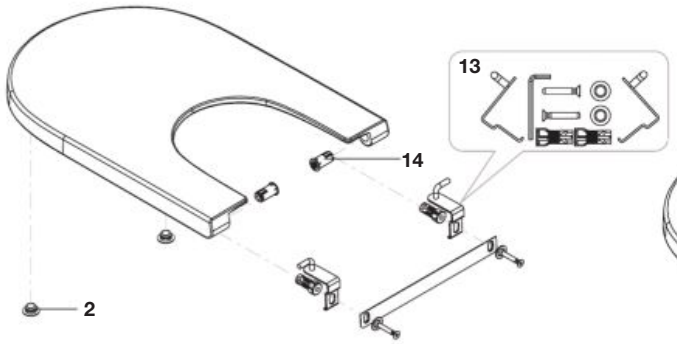

A806D12001	CR

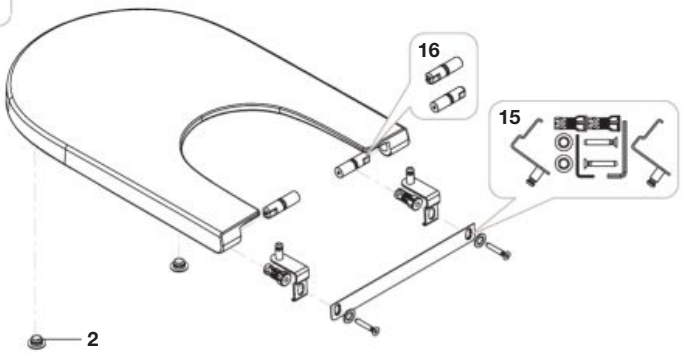

CL: **Caída libre /** Standard closing
CR: **Caída retardada /** Soft-closing

						€
1	4 un	**AI0009100R**				1,25
2	2 un	**AI0000200R**				0,98
9		**AI0022600R**	A			13,60
		AI0025000R	B			9,80
10	2 un	**AI0021900R**	A	CR std		26,10
		AI0022100R	A	CR cpt		26,40
10	2 un	**AI0025400R**	B	CR std		8,72
		AI0028300R	B	CR cpt		24,40

					€
11	2 un	**AI0020900R**	A	CL	10,50
12	2 un				
11	2 un	**AI0028500R**	B	CL	18,20
12	2 un				
13		**AI0023600R**		CL	21,10
14	2 un				
15		**AI0013100R**			22,00
16		**AI0022300R**		CR	27,10

Debba Square

Asiento y tapa inodoro / Toilet seat & cover

A8019D200B CR

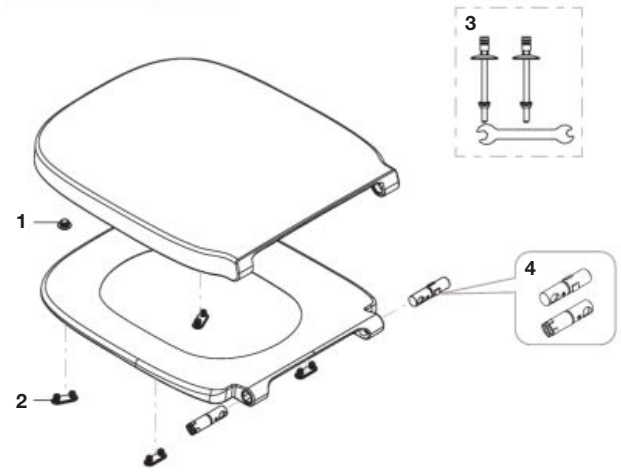

A8019D000B CL

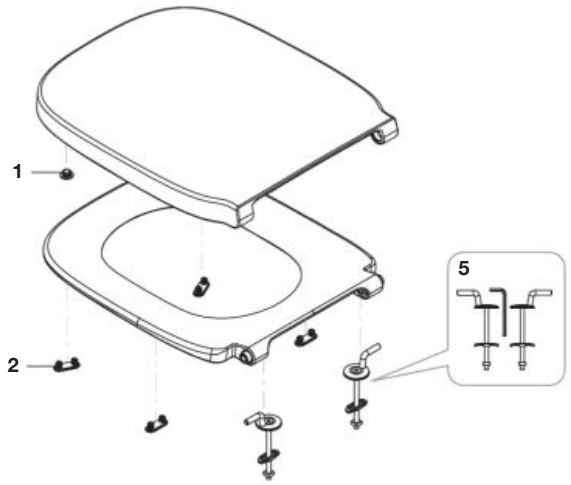

Tapa bidé / Bidet cover

A8069D200B CR

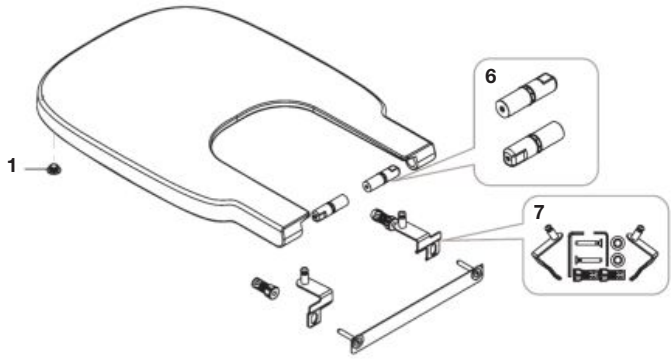

A8069D000B CL

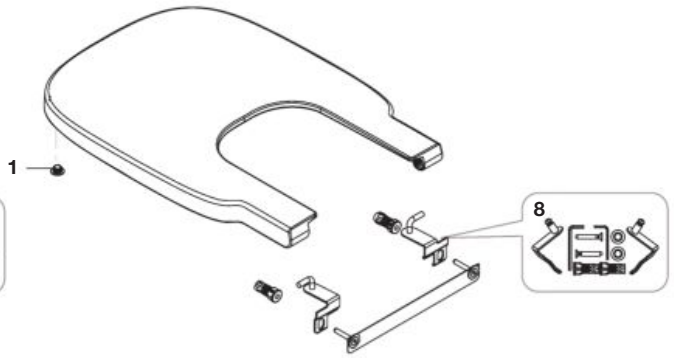

CL: Caída libre / Standard closing
CR: Caída retardada / Soft-closing

			€
1	2 ud	**AI0000200R**	0,98
2	4 ud	**AI0009100R**	1,25
3		**AI0020600R**	14,20
4		**AI0022000R**	26,70

			€
5		**AI0020500R**	17,90
6		**AI0022200R**	27,10
7		**AI0022900R**	25,00
8		**AI0014400R**	25,30

Debba Round

Asiento y tapa inodoro / Toilet seat & cover

A801B2200B | CR

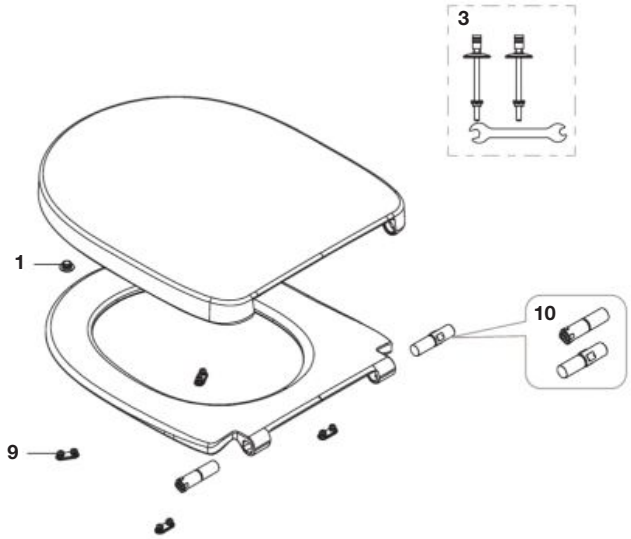

A801B2000B | CL

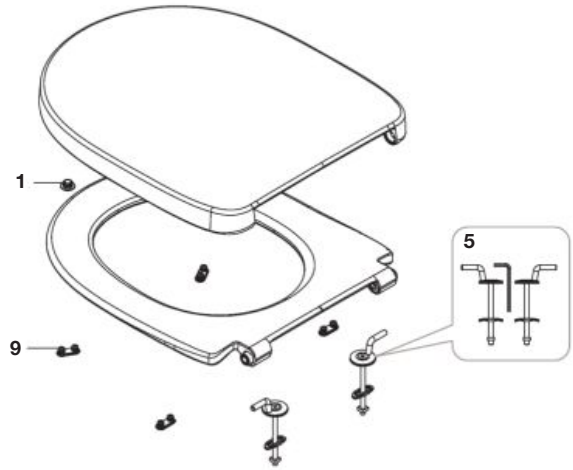

Tapa bidé / Bidet cover

A806B2000B | CR

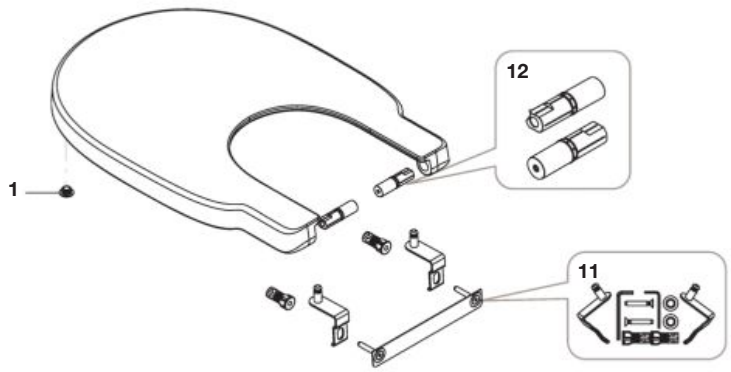

CL: **Caída libre /** Standard closing
CR: **Caída retardada /** Soft-closing

			€
1	2 un	**AI0000200R**	0,98
3		**AI0020600R**	14,20
5		**AI0020500R**	17,90
9	4 un	**AI0012800R**	4,76

			€
10		**AI0021800R**	26,50
11		**AI0018900R**	37,30
12		**AI0022400R**	20,30

Victoria

Asiento y tapa inodoro / Toilet seat & cover

A34PV06000	Pack
A801E50001	CL

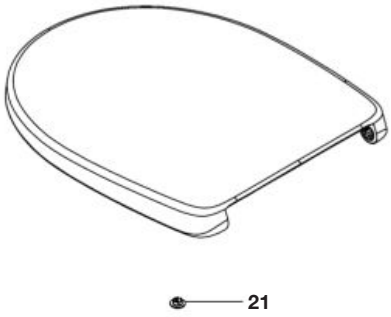

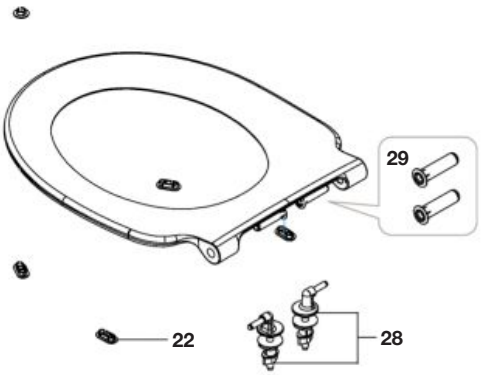

CL: Caída libre / Standard closing

			€
21	2 un	**AI0026300R**	2,68
22	4 un	**AI0026200R**	3,97
28		**AI0016300R**	15,10
29		**AI0027900R**	2,14

Asiento y tapa inodoro / Toilet seat & cover

A34DV09000	Compact	CR
A34DV08000	Compact	CR
A34HV00000	Standard	CR
A801E62001	Compact	CR
A34PV04000	Standard	CR
A801E52002	Standard	CR
A801E52002	Slim	CR

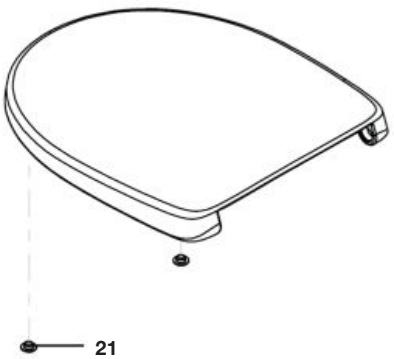

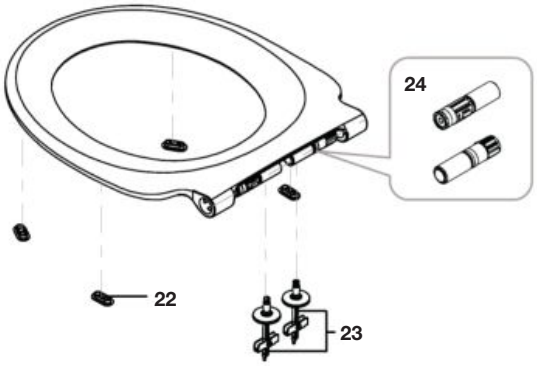

CR: Caída retardada / Soft-closing

				€
21	2 un	**AI0026300R**		2,68
22	4 un	**AI0026200R**		3,97
23		**AI0025000R**		9,80
24		**AI0027600R**	Compact	24,60
		AI0028300R	Standard	24,40
		AI0029200R	Slim	14,10

Civic

Asiento y tapa inodoro / Toilet seat & cover



A801922004	CR
A801920004	CL

Si su asiento es como imagen A es posterior a 2015 y los recambios mostrados corresponden a este modelo. Si su asiento es como imagen B, es anterior a 2015 y no dispone de recambios.

If your seat is like image A it is after 2015 and the shown spare parts belong to this model. If your seat is like image B it is before 2015 and does not have available spare parts.

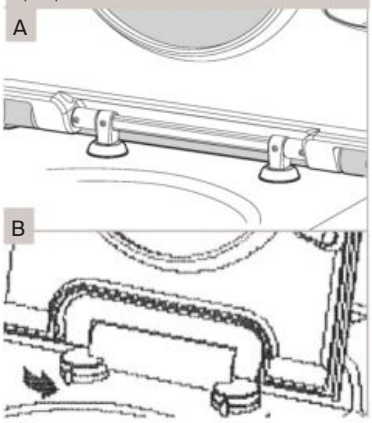

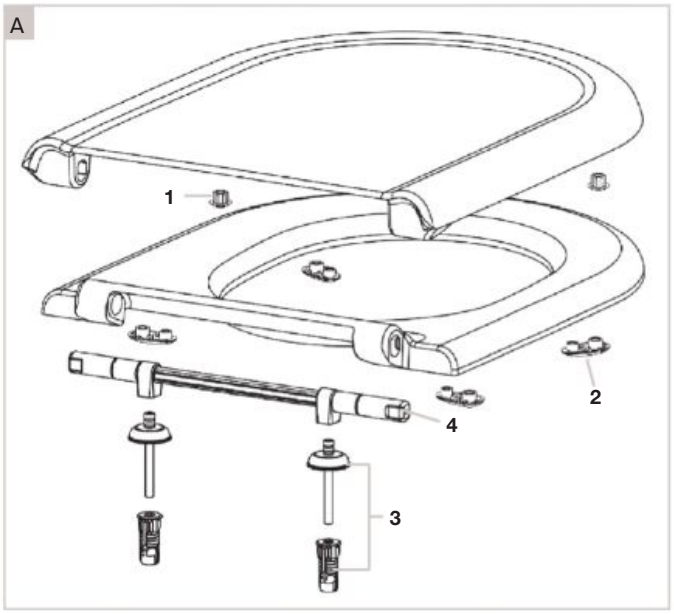

CL: Caída libre / Standard closing
CR: Caída retardada / Soft-closing

				€
1	2 un	**AI0013300R**		2,21
2	4 un	**AI0013400R**		3,24
3	2 un	**AI0013600R**		37,00
4		**AI0013500R**	CR	96,50

Meridian-N

Asiento y tapa inodoro y bidé / Toilet and bidet seat & cover



A8012AC..4	CR	COMPACT
A8012AB..4	CL	COMPACT
A8012A2..4	CR	STANDARD
A8012A0..4	CL	STANDARD



A8062AC..4	CR	COMPACT
A8062AB..4	CL	COMPACT
A8062A2..4	CR	STANDARD
A8062A0..4	CL	STANDARD

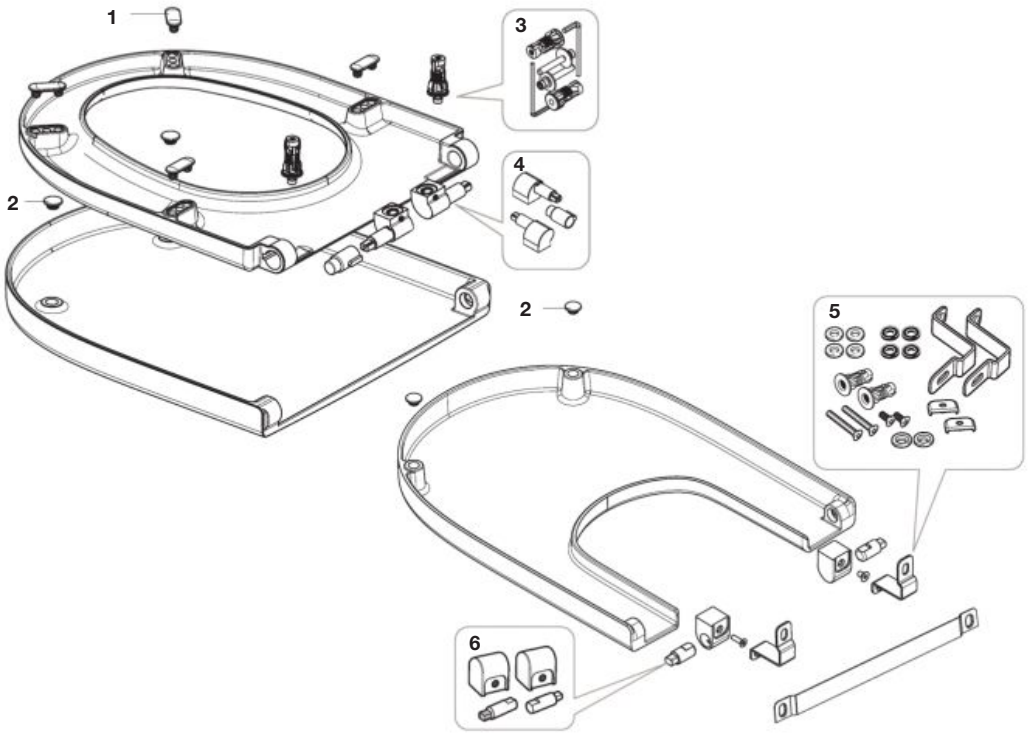

Atención a la versión de las bisagras, fijaciones y casquillos.
La imagen A corresponde a la versión de bisagras (CR) y fijaciones (CL) V5. Hay que coger bisagras, fijaciones y casquillos versión A.
La imagen B corresponde a la versión de bisagras (CR) y fijaciones (CL) V6. Hay que coger bisagras, fijaciones y casquillos versión B.
Attention to hinges, fixings and bushings version. If it is like image A, hinges (CR) and fixings (CL) are the V5 version. You have to take version A of hinges, fixings and bushings. If it is like image B, hinges (CR) and fixings (CL) are the V6 version. You have to take version B of hinges, fixings and bushings.

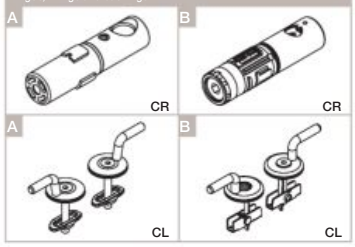

Asiento y tapa inodoro / Toilet seat & cover



A8012AC..B	CR	COMPACT
A8012AB..B	CL	COMPACT
A8012A2..B	CR	STANDARD
A8012A0..B	CL	STANDARD

A8012AC..B
A8012A2..B

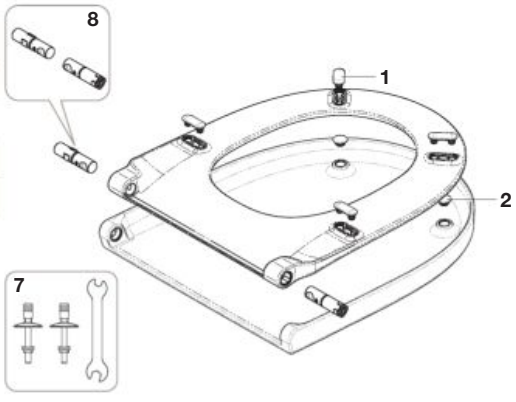

A8012AB..B
A8012A0..B

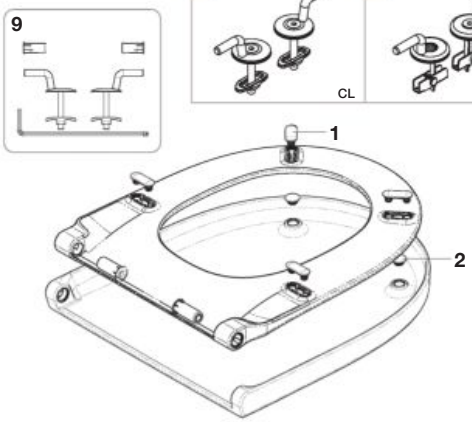

CL: Caída libre / Standard closing
CR: Caída retardada / Soft-closing

Sustituir (..) de la referencia de producto por el código de color elegido:
In the product reference replace (..) with the code for the selected finish code:
00 Blanco / White
17 Pergamon

					€
1	4 un	**AI0009100R**			1,25
		AI0009117R			3,42
2	2 un	**AI0000200R**			0,98
		AI0000217R			1,83
3		**AI0000400R**			5,22
4		**AI0012400R**		CR	47,90
		AI0012500R		CL	21,80

					€
5		**AI0004200R**			15,90
6		**AI0004100R**		CR	52,70
		AI0004500R		CL	31,70
7		**AI0022600R**	A	CR	13,60
		AI0025000R	B	CR	9,80
8		**AI0022000R**	A	CR std	26,70
		AI0022100R	A	CR cpt	26,40

					€
8		**AI0028600R**	B	CR std	24,40
		AI0028300R	B	CR cpt	24,40
9		**AI0020900R**	A	CL	10,50
		AI0028500R	B	CL	18,20

Meridian-N

Tapa bidé / Bidet cover



A8062AC..B	CR	COMPACT
A8062AB..B	CL	COMPACT
A8062A2..B	CR	STANDARD
A8062A0..B	CL	STANDARD

A8062AC..B
A8062A2..B

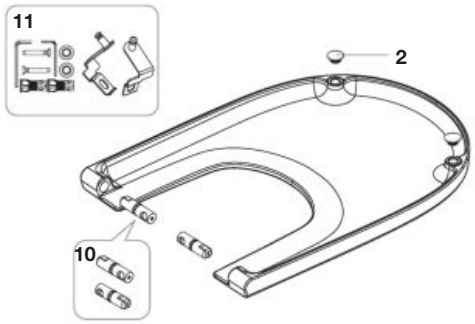

A8062AB..B
A8062A0..B

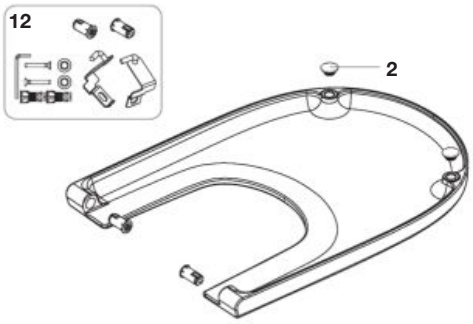

Asiento y tapa inodoro Access / Acces toilet seat & cover



A801230004	Asiento y tapa
A80123D004	Aro

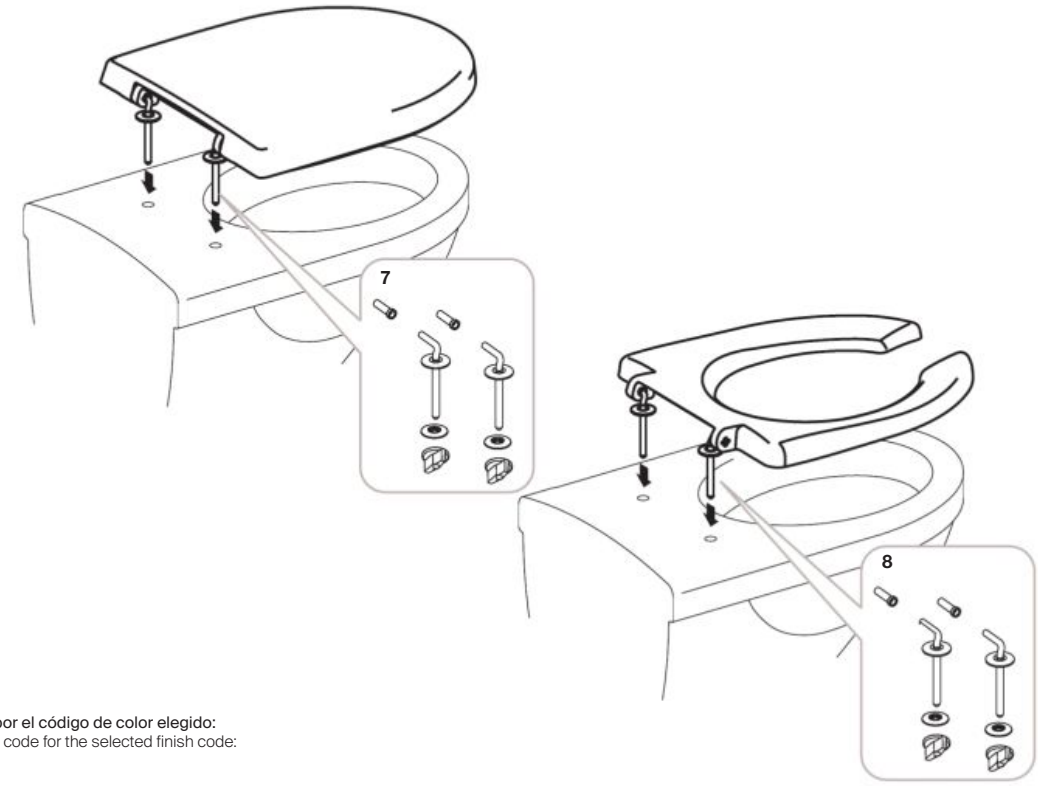

CL: Caída libre / Standard closing
CR: Caída retardada / Soft-closing

Sustituir (..) de la referencia de producto por el código de color elegido:
In the product reference replace (..) with the code for the selected finish code:
00 Blanco / White
17 Pergamon

				€
2	2 un	**AI0000200R**		0,98
		AI0000217R		1,83
7		**AI0009600R**	CL	10,90
8		**AI0009700R**	CL	10,60

		€
10	**AI0022200R**	27,10
11	**AI0022800R**	22,30
12	**AI0023200R**	20,80

Tura

Asiento y tapa inodoro / Toilet seat & cover

A801F02..2	CR	STANDARD

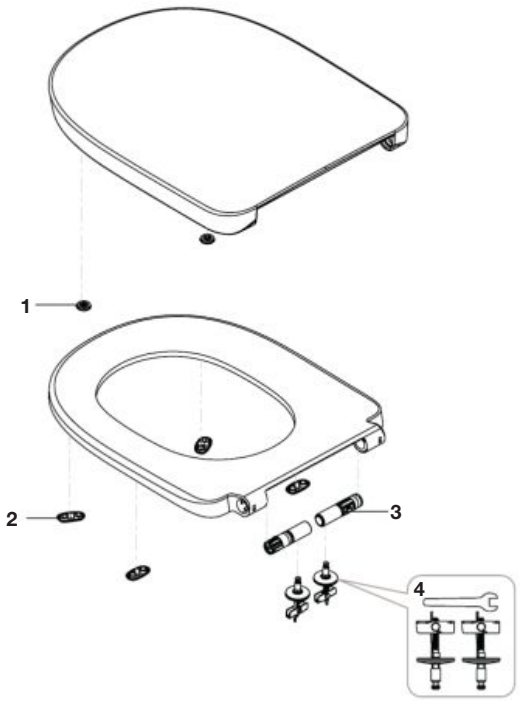

Tapa bidé / Bidet cover

A806F02..2	CR	STANDARD

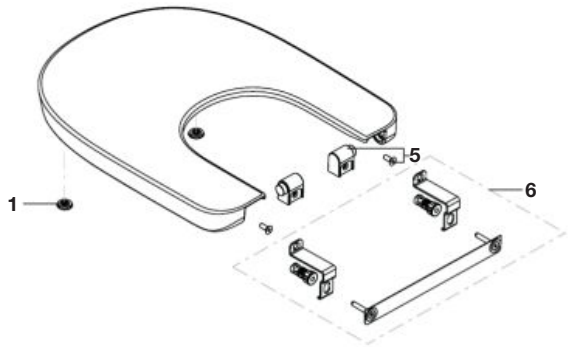

CR: Caída retardada / Soft-closing

				€
1	2 un	**AI0026900R**		8,17
2	4 un	**AI0027000R**		8,17
3		**AI0025400R**		8,72
4		**AI0025000R**		9,80
5	2 un	**AI0027100R**		84,10
6		**AI0027200R**	Standard	48,60

Otras series de asientos y tapas / Other seats & covers series

Asiento y tapa inodoro / Toilet seat & cover

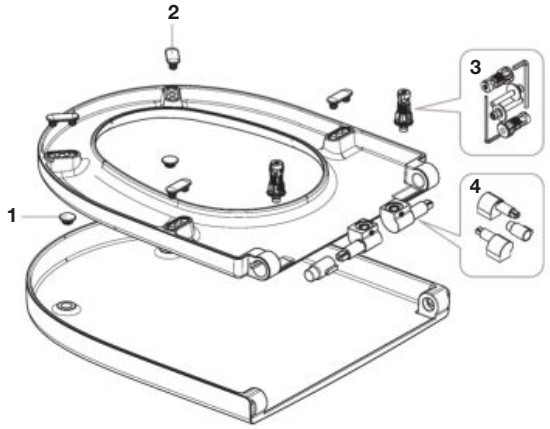

Tapa bidet / Bidet cover

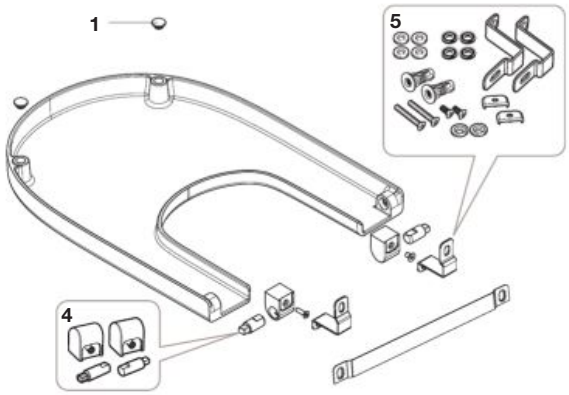

Los dibujos son genéricos, para cada modelo específico pueden haber diferencias.
The drawings may not conform to reality, they are generic:

CL: Caída libre / Standard closing
CR: Caída retardada / Soft-closing

Serie	Referencia PA / PA reference	Tipo / Type	1	2	3	4	5
Carmen	A801B52..B	CR	AI0009000R 2 un	AI0009100R 4 un	AI0000400R	AI0016800R	-
	A801B5238B	CR	AI0017092R 4 un				
	A806B50..B	CL	AI00090..R 2 un	-	-	AI0016900R	
	A806B5038B	CL	AI0017092R 4 un				
Dama Retro	A801327..4	CL	AI0009000R 2 un	AI0009100R 4 un	AI0005800R Blanco		-
					AI0005900R Pergamon		
					AI0006000R Visión		
					AI0006100R Gris		
					AI0001800R Blanco	-	
					AI0001900R Aguamar	-	
					AI0002000R Cairo	-	
	A806320..4	CL		-	-	AI0007700R	AI0008400R
America	A801492..4	CR		AI0009100R 4 un	AI0000400R	AI0001200R	-
	A806490..4	CL		-	-	AI0002800R	
Access	A801230004	CL	AV0008100R 2 un	AV0008200R 4 un	AI0009600R		-
	A80123C004	CL	AI0018800R		AI0011500R		
	A80123D004	CL			AI0009700R		
	A801232004	CR			AI0018200R		
	A80123A004	CL			AI0011500R		
Happening	A801562..4	CR	AI00090..R 2 un	AI0009100R 4 un	AI0000400R	AI0001200R	-
Victoria	A801B62..B	CR			AI0016400R	AI0019900R	
	A801B60..B	CL			AI0016300R	AI0024100R	
	A801B66..B	CL			AI0016200R		
	A806390..4	CL		-	-	AI0003000R	
Khroma	A801652...	CR	AI0009000R 2 un	AI0009100R 4 un	AI0000400R	AI0003800R	-
	A806652...	CR		-	-	AI0004000R	AI0002500R
Element	A801572..4	CR		AI0009100R 4 un	AI0000400R	AI0001300R	-
Hall	A80162C..4	CR				AI0001200R	-
	A80162B..4	CL	AI0000200R 2 un		AI0006500R		-
	A801622..4	CR			AI0000400R	AI0001200R	-
	A801620..4	CL	AI0009000R 2 un		AI0006500R		-
	A80662B..4	CL		-	-	AI0005200R	
	A806620..4	CL		-	-	AI0005200R	
Beyond	A801B82..B	CR	AI0000200R 2 un	AI00128..R 4 un	AI0020300R	AI0022000R	-
	A806B82..B	CR	-		-	AI0022200R	AI0016700R
Inspira	A801522..B	CR	AI00128..R 4 un	AI00002..R 2 un	AI0012700R	AI0013000R	AI0022600R
	A80152C..B	CR			AI0012900R		
	A801522..2	CR			AI0022100R	AI0022000R	
	A801532..B	CR					

Otras series de asientos y tapas
Other seat & covers series

		€
1	**AI0000200R**	0,98
	AI0009000R	0,98
	AI0009017R	1,02
	AI0009091R	0,53
	AI0009092R	0,53
	AI0009093R	0,53
	AI0012800R	4,76
	AI0012862R	2,06
	AI0012863R	2,06
	AI0012864R	2,06
	AI0012865R	2,06
	AI0012866R	2,06
	AI0017092R	5,38
	AV0008100R	4,38

		€
2	**AI0000200R**	0,98
	AI0000262R	0,98
	AI0000263R	0,53
	AI0000264R	0,53
	AI0000265R	0,53
	AI0000266R	0,53
	AI0009100R	0,53
	AI0012800R	4,76
	AI0012862R	2,06
	AI0012863R	2,06
	AI0012864R	2,06
	AI0012865R	2,06
	AI0012866R	2,06
	AV0008200R	10,00

		€
3	**AI0000400R**	5,22
	AI0001800R	4,65
	AI0001900R	4,93
	AI0002000R	4,58
	AI0012700R	21,80
	AI0012900R	21,80
	AI0016400R	9,90
	AI0020300R	14,80
	AI0022100R	26,40

		€
4	**AI0001200R**	86,70
	AI0001300R	90,00
	AI0003800R	88,20
	AI0004000R	44,80
	AI0007700R	32,80
	AI0013000R	21,80
	AI0016800R	76,70
	AI0019900R	34,30
	AI0022000R	26,70
	AI0022200R	27,10

		€
5	**AI0002500R**	4,33
	AI0008400R	7,68
	AI0016700R	11,10
	AI0022600R	13,60

		€
1-2	**AI0018800R**	5,42

		€
3-4	**AI0005800R**	10,20
	AI0005900R	10,60
	AI0006000R	10,60
	AI0006100R	10,60
	AI0006500R	23,70
	AI0009600R	10,90
	AI0009700R	10,60
	AI0011500R	12,00
	AI0011500R	12,00
	AI0016200R	5,77
	AI0016300R	15,10
	AI0018200R	15,10

		€
4-5	**AI0002800R**	25,80
	AI0003000R	22,50
	AI0005200R	30,50
	AI0016900R	40,30

Sustituir (..) de la referencia de producto por el código de color elegido:
In the product reference replace (..) with the code for the selected finish code:

Carmen	**00**	Blanco / White
	38	Gris oscuro / Dark grey
	56	Negro / Black
Dama Retro	**00**	Blanco / White
	17	Pergamon
	15	Rosa ilusión / Pink ilusion
	19	Visón / Mink
	91	Edelweiss
	93	Jazmín / Jasmine
America	**00**	Blanco / White
	91	Edelweiss
	M1	Cerezo / Cherry

Happening Element Hall	**00**	Blanco / White
	17	Pergamon
	91	Edelweiss
	92	Grafito / Graphit
	93	Jazmín / Jasmine
Victoria	**00**	Blanco / White
	17	Pergamon
Khroma	**004**	Blanco / White
	F1T	Gris claro / Light grey
	F2T	Gris oscuro / Dark grey
	F3T	Rojo / Red
	F4T	Azul / Blue

Beyond	**00**	Blanco / White
	62	Blanco mate / Matt white
	63	Perla / Pearl
	64	Onix
	65	Beige
	66	Café / Coffee
Inspira	**00**	Blanco / White
	62	Blanco mate / Matt white
	63	Perla / Pearl
	64	Onix
	65	Beige
	66	Café / Coffee

Asientos y tapas / Toilets seats & covers 337

Otras series de asientos y tapas
Other seat & covers series

Frontalis

			€
Conj. bisagras caída amortiguada asiento inodoro / Kit soft close hinge front/element brass	(latón)	**AI0001300R**	90,00
Conj. laterales de bisagra AI0001200R y AI0001300R / Kit hinge elements soft close brass AI0001200R & AI0001300R	(latón)	**AI0001100R**	35,80
Conj. fijac. bisagra caída amorti. asiento lacado inodoro (2) / Kit cushioned plunge seat fixation soft close		**AI0000400R**	5,22

Element

			€
Conj. bisagras caída amortiguada asiento inodoro / Kit soft close hinge front/element brass	(latón)	**AI0001300R**	90,00
Conj. laterales de bisagra AI0001200R y AI0001300R / Kit hinge elements soft close brass AI0001200R & AI0001300R	(latón)	**AI0001100R**	35,80
Conj. fijac. bisagra caída amorti. asiento lacado inodoro (2) / Kit cushioned plunge seat fixation soft close		**AI0000400R**	5,22

Veranda

		€
Conj. bisagras caída amortiguada asiento inodoro / Kit soft close hinges	**AI0003100R**	87,00
Conj. fijac. bisagra común asiento lacado inodoro (2) / Kit seat fixation	**AI0002400R**	3,78

America

			€
Conj. bisagras caída amortiguada asiento inodoro (1) / Kit hinge soft close cr brass	(latón)	**AI0001200R**	86,70
Conj. laterales de bisagra AI0001200R y AI0001300R / Kit hinge elements soft close brass AI0001200R & AI0001300R	(latón)	**AI0001100R**	35,80
Conj. bisagras acero tapa bidé / Kit fix hinge bowl/bidet dama senso		**AI0002800R**	25,80
Conj. fijac. bisagra caída amorti. asiento lacado inodoro (2) / Kit cushioned plunge seat fixation soft close		**AI0000400R**	5,22
Conj. fijación bisagra común asiento lacado inodoro (2) / Kit seat fixation		**AI0002400R**	3,78
Conj. bisagras acero asiento inodoro (1+2) / Seat hinges cp (1+2)		**AI0006500R**	23,70
Tope tapa redondo blanco (2 un) / Kit round white lid stop (2u)		**AI0009000R**	1,25
Tope aro asiento blanco (4 un) / Kit stopper white (4un)		**AI0009100R**	1,25

Happening

			€
Conj. bisagras caída amortiguada asiento inodoro (1) / Kit hinge soft close cr brass	(latón)	**AI0001200R**	86,70
Conj. laterales de bisagra AI0001200R y AI0001300R / Kit hinge elements soft close brass AI0001200R & AI0001300R	(latón)	**AI0001100R**	35,80
Conj. bisagras cromada tapa bidé / Kit hinge lid bidet happening		**AI0009400R**	43,70
Conj. fijac. bisagra caída amorti. asiento lacado inodoro (2) / Kit cushioned plunge seat fixation soft close		**AI0000400R**	5,22
Conj. bisagras plástic. as. inodoro (Happening Baby) (1+2) / Kit fixation ring happening baby		**AI0003400R**	8,75

Hall

			€
Conj. bisagras caída amortiguada asiento inodoro (1) / Kit hinge soft close cr brass	(latón)	**AI0001200R**	86,70
Conj. laterales de bisagra AI0001200R y AI0001300R / Kit hinge elements soft close brass AI0001200R & AI0001300R	(latón)	**AI0001100R**	35,80
Conj. bisagras cromada tapa bidé / Kit hinge cover bidet		**AI0003600R**	29,20
Conj. fijac. bisagra caída amorti. asiento lacado inodoro (2) / Kit cushioned plunge seat fixation soft close		**AI0000400R**	5,22
Conj. fijación bisagra común asiento lacado inodoro (2) / Kit seat fixation		**AI0002400R**	3,78
Conj. bisagras acero asiento inodoro (1+2) / Seat hinges cp (1+2)		**AI0006500R**	23,70
Conj. bisagras tapa bide / Kit fixation hinge bidet gap		**AI0005200R**	30,50
Tope tapa redondo blanco (2 un) / Kit round white lid stop (2u)		**AI0009000R**	1,25

(1) Conjunto de bisagras / Hinges set
(2) Conjunto fijación bisagras / Hinges fixation set

Otras series de asientos y tapas
Other seat & covers series

Victoria

		€
Conj. bisagras acetálicas asiento inodoro (1+2) / Kit nylon hinge seat victoria	**AI0002900R**	4,63
Conj. bisagras acero tapa bidé (VICTORIA-05 (806390) / Kit hinge cover bidet vic-05	**AI0003000R**	22,50
Conj. bisagras acero tapa bidé (VICTORIA (806300) / Kit stainless hinge bidet lid victoria	**AI0008100R**	27,70
Conj. fijac. bisagra caída amorti. asiento lacado inodoro (2) / Kit cushioned plunge seat fixation soft close	**AI0000400R**	5,22
Conj. bisagra acero asiento inodoro / Kit steel hinge seat aq-vict	**AI0005500R**	15,30
Conj. fijación bisagras asiento inodoro / Kit seat hinge fix gondola-victoria	**AI0007300R**	4,10
Conjunto bisagras VICTORIA-05 caída retardada / Kit hinge soft close victoria-05	**AI0003300R**	85,50
Conjunto bisagras inodoro VICTORIA-05 caída libre / Kit plastic hinge vict	**AI0009500R**	6,40
Tope tapa redondo blanco (2 un) / Kit round white lid stop (2u)	**AI0009000R**	1,25
Tope aro asiento blanco (4 un) / Kit stopper white (4un)	**AI0009100R**	1,25

Debba

		€
Conj. bisagras y fijación rápida, caída libre STD inodoro (1+2) / Kit fixing-hinge set std met fast	**AI0011300R**	28,60
Conj. bisagras caída amortiguada inodoro (1) / Kit soft cl. hinge	**AI0011200R**	76,80
Fijaciones caída amortiguada inodoro (2) / Kit fixing s.close debba	**AI0011000R**	50,20

Asientos Infantiles / Child seats

		€
Conj. bisagras plásticas inodoro Happening Baby (1+2) / Kit fixation ring happening baby	**AI0003400R**	8,75
Conj. bisagras y fijación rápido plástico Baby S-PB (1+2) / Kit hinges+fixing wc pls fast baby s-pb	**AI0010900R**	5,67

Access

		€
Conj. bisagras aro y tapa inodoro / Kit hinge + fixation lid-hoop access	**AI0009600R**	10,90
Conj. bisagras tapa inodoro / Kit hinge + fixation hoop access	**AI0009700R**	10,60
Kit topes tapa access (2 un) / Kit top lid access (2 u.)	**AV0008100R**	4,38
Kit topes asiento access (4 un) / Kit top seat access (4u)	**AV0008200R**	10,00
Conj. bisagras y fijación CL Access / Kit hin+fix. sc met access (closed seat)	**AI0018200R**	31,10
Conj. bisagras y fijación STD Access / Kit + fij wc cl rapid. access	**AI0011500R**	12,00

Meridian Retro

			€
Conj. bisagras caída amortiguada asiento inodoro (1) / Kit hinge soft close cr brass	(latón)	**AI0001200R**	86,70
Conj. laterales de bisagra AI0001200R y AI0001300R / Kit hinge elements soft close brass AI0001200R & AI0001300R	(latón)	**AI0001100R**	35,80
Conj. bisagras acero tapa bidé / Kit sainless hinge bidet lid meridian		**AI0007800R**	46,80
Conj. fijac. bisagra caída amorti. asiento lacado inodoro (2) / Kit cushioned plunge seat fixation soft close		**AI0000400R**	5,22
Conj. fijación bisagra común asiento lacado inodoro (2) / Kit seat fixation		**AI0002400R**	3,78
Conj. fijación bisagras común tapa bidé / Kit hinge lid bidet fix mer+geo		**AI0008500R**	2,92
Conj. bisagras acero asiento inodoro (1+2) / Kit seat hinge steel meridian		**AI0006300R**	24,30

Dama Senso

			€
Conj. bisagras caída amortiguada asiento inodoro (1) / Kit hinge soft close cr brass	(latón)	**AI0001200R**	86,70
Conj. laterales de bisagra AI0001200R y AI0001300R / Kit hinge elements soft close brass AI0001200R & AI0001300R	(latón)	**AI0001100R**	35,80
Conj. bisagras acero tapa bidé / Kit fix hinge bowl/bidet dama senso		**AI0002800R**	25,80
Conj. fijac. bisagra caída amorti. asiento lacado inodoro (2) / Kit cushioned plunge seat fixation soft close		**AI0000400R**	5,22
Conj. fijación bisagra desmontable asiento lacado inodoro (2) / Kit set fixation dama senso		**AI0002500R**	4,33
Conj. bisagras desmontable asiento inodoro (1) / Kit removable hinge da-se		**AI0002100R**	10,80

(1) Conjunto de bisagras / Hinges set
(2) Conjunto fijación bisagras / Hinges fixation set

Otras series de asientos y tapas
Other seat & covers series

Gondola

		€
Bisagra acero asiento / Kit seat hinge steel gondola	**AI0006700R**	24,00
Conj. fijación bisagras común tapa bidé / Kit hinge lid bidet fix gondola	**AI0008700R**	9,55
Conj. bisagras tapa bidé / Kit hinge bidet lid gondola	**AI0008200R**	38,50
Conj. fijación bisagras asiento inodoro / Kit seat hinge fix gondola	**AI0007300R**	4,10
Tope aro asiento blanco (4 un) / Kit stopper white (4un)	**AI0009100R**	1,25
Tope tapa redondo blanco (2 un) / Kit round white lid stop (2u)	**AI0009000R**	1,25

Dama Senso Compacto

			€
Conj. bisagras caída amortiguada asiento inodoro (1) / Kit hinge soft close cr brass	(latón)	**AI0001200R**	86,70
Conj. laterales de bisagra AI0001200R y AI0001300R / Kit hinge elements soft close brass AI0001200R & AI0001300R	(latón)	**AI0001100R**	35,80
Conj. bisagras acero tapa bidé / Kit hinge cover bidet dama s com		**AI0003500R**	27,20
Conj. fijac. bisagra caída amorti. asiento lacado inodoro (2) / Kit cushioned plunge seat fixation soft close		**AI0000400R**	5,22

Dama Retro

		€
Conj. bis acetálica extraíble asiento inodoro blanco (1+2) / Kit white hinge seat dama	**AI0005800R**	10,20
Conj. bis acetálica extraíble asiento inodoro pergamon (1+2) / Kit hinge pergamon seat dama	**AI0005900R**	10,60
Conj. bis acetálica extraíble asiento inodoro vison (1+2) / Kit seat hinge vison dama	**AI0006000R**	10,60
Conj. bis acetálica extraíble asiento inodoro gris (1+2) / Kit seat hinge gray dama	**AI0006100R**	10,60
Conj. bisagras acero tapa bidé / Kit lid bidet hinge dama	**AI0007700R**	32,80
Conj. fijación bisagra caída amorti. asiento lacado inodoro (2) / Kit cushioned plunge seat fixation soft close	**AI0000400R**	5,22
Conj. fijación bisagras acetálica extraíbl. asien. inodoro blanco (2) / Kit seat fixation white removable dama	**AI0001800R**	4,65
Conj. fijación bisagras acetálica extraíbl. asien. inodoro aguamar (2) / Kit seat fixation aq-m romovable dama	**AI0001900R**	4,93
Conj. fijación bisagras acetálica extraíbl. asien. inodoro cairo (2) / Kit seat fix cairo romovable dama	**AI0002000R**	4,58
Conj. fijación bisagras común tapa bidé / Kit hinge lid bidet fix dama	**AI0008400R**	7,68
Conj. bisagras inox btw / Kit stainless hinge dama btw	**AI0006900R**	23,30
Conj. fijación bisagras asiento / Kit seat hinge fix dama	**AI0007100R**	3,38
Tope aro asiento gris (4 un) / Kit gray bumpers seat toilet/bide (4u)	**AI0000300R**	1,10
Tope tapa asiento gris (2 un) / Kit seat lid stop dama gray (2u)	**AI0009200R**	0,62
Kit asiento inox bl. / Kit asiento dama inox. bl.	**AI0000100R**	140,00

(1) **Conjunto de bisagras /** Hinges set
(2) **Conjunto fijación bisagras /** Hinges fixation set

Otras series de asientos y tapas
Other seat & covers series

Giralda

			€
Conj. bisagras caída amortiguada asiento inodoro (1) / Kit hinge soft close cr brass	(latón)	**AI0001200R**	86,70
Conj. laterales de bisagra AI0001200R y AI0001300R / Kit hinge elements soft close brass AI0001200R & AI0001300R	(latón)	**AI0001100R**	35,80
Conj. bisagras acero asiento inodoro (1+2) / Seat hinges cp (1+2)		**AI0006500R**	23,70
Conj. bisagras desmontable asiento inodoro (1) / Kit removable hinge da-se		**AI0002100R**	10,80
Conj. bisagras acero tapa bidé / Kit hinge lid/bidet giralda		**AI0002300R**	25,20
Conj. fijac. bisagra caída amorti. asiento lacado inodoro (2) / Kit cushioned plunge seat fixation soft close		**AI0000400R**	5,22
Conj. fijación bisagra desmontable asiento lacado inodoro (2) / Kit set fixation dama senso		**AI0002500R**	4,33
Conj. bisagras común asiento lacado inodoro (2) / Kit seat fixation		**AI0002400R**	3,78

Sidney

			€
Conj. bisagras caída amortiguada asiento inodoro (1) / Kit hinge soft close cr brass	(latón)	**AI0001200R**	86,70
Conj. laterales de bisagra AI0001200R y AI0001300R / Kit hinge elements soft close brass AI0001200R & AI0001300R	(latón)	**AI0001100R**	35,80
Conj. bisagras acero tapa bidé / Kit stainless hinge bidet lid sidney		**AI0008000R**	42,30
Conj. fijac. bisagra caída amorti. asiento lacado inodoro (2) / Kit cushioned plunge seat fixation soft close		**AI0000400R**	5,22
Conj. fijación bisagra común asiento lacado inodoro (2) / Kit seat fixation		**AI0002400R**	3,78
Conj. bisagras acero asiento inodoro (1+2) / Seat hinges cp (1+2)		**AI0006500R**	23,70
Conj. fijación bisagras común tapa bidé / Kit lid bidet fix sidney		**AI0008800R**	9,82

Khroma

		€
Conj. bisagras caída amortiguada asiento inodoro / Kit cushioned hinge soft close	**AI0003800R**	88,20
Conj. fijac. bisagra caída amorti. asiento lacado inodoro (2) / Kit cushioned plunge seat fixation soft close	**AI0000400R**	5,22
Juego embellecedor bisagras / Kit ornamental hinge	**AI0002200R**	2,17
Tope tapa redondo blanco (2 un) / Kit round white lid stop (2u)	**AI0009000R**	1,25
Tope aro asiento blanco (4 un) / Kit stopper white (4un)	**AI0009100R**	1,25

Georgia

		€
Conj. bisagra acero asiento inodoro (1+2) / Seat hinges cp (1+2)	**AI0006500R**	23,70
Conj. bisagras acero tapa bidé / Kit stainless hinge bidet lid sidney	**AI0008000R**	42,30
Conj. fijación bisagras común asiento lacado inodoro (2) / Kit seat fixation	**AI0002400R**	3,78
Conj. fijación bisagras común tapa bidé / Kit hinge lid bidet fix mer+geo	**AI0008500R**	2,92

Veronica

		€
Conj. fijac. bisagras caída amorti. asiento lacado inodoro (2) / Kit cushioned plunge seat fixation soft close	**AI0000400R**	5,22
Conj. fijac. bisagras común asiento lacado inodoro (2) / Kit seat fixation	**AI0002400R**	3,78
Conj. bisagra cromada asiento inodoro / Kit seat hinge chrome veronica	**AI0006400R**	43,30
Conj. fijación bisagras común asiento lacado inodoro (2) / Kit seat hinge fix veronica	**AI0007200R**	27,80
Conj. bisagras cromada tapa bidé / Kit chrome hinge bidet lid veronica	**AI0007900R**	32,80
Conj. fijación bisagras tapa bidé / Kit hinge lid bidet fix veronica	**AI0008600R**	24,00

Atlanta

		€
Conj. bisagras cromadas tapa bidé / Kit chrome hinge bidet lid atlanta	**AI0007500R**	17,30
Conj. bisagras cromadas asiento inodoro / Kit chrome hinge seat atlanta	**AI0005600R**	32,30
Conj. bisagras dorada tapa bidé / Kit golden hinge bidet lid atlanta	**AI0007600R**	18,00

(1) **Conjunto de bisagras /** Hinges set
(2) **Conjunto fijación bisagras /** Hinges fixation set

Otras series de asientos y tapas
Other seat & covers series

Urinett

		€
Conj. bisagras acero tapa urinario / Kit steel hinge lid urinett	**AI0005300R**	7,37
Topes tapas urinario (2 un) / Kit round white lid stop (2u)	**AI0009000R**	1,25

Lorentina

		€
Tope asiento y tapa (2 un) / Kit seat stop lorentin 2 un	**AI0004300R**	0,80
Conjunto bisagras / Kit white hinge	**AI0001400R**	17,30

Lucerna

		€
Tope tapa (4 un) / Kit cover stop lucerna (4un)	**AI0004400R**	1,10
Conjunto bisagras blanco / Kit white hinge	**AI0001400R**	17,30
Tope aro (2 un) / Kit seat stop 2 un	**AI0004300R**	0,80

Senso Square

		€
Conj. fijación bisagra caída amorti. asiento inodoro (2) / Kit cushioned plunge seat fixation soft close	**AI0000400R**	5,22

Aquaria

		€
Conj. bisagra acero asiento / Kit steel hinge seat aq-vict	**AI0005500R**	15,30
Conj. fijac. bisagra tapa bidé / Kit hinge fix bidet lid aquaria	**AI0008300R**	8,53

Columbia

		€
Conj. bisagra cromo asiento / Kit chrome hinge seat columbia	**AI0005400R**	32,80
Conj. fijac. bisagra asiento / Kit seat hinge fix columbia	**AI0007000R**	4,35

Liberty

		€
Conj. bisagra cromada asiento / Kit seat hinge chrome liberty	**AI0006200R**	29,20

Carena

		€
Juego bisagra blanca / Kit white hinge	**AI0001500R**	27,20

Magnum

		€
Conj. bisagras acetálicas asiento inodoro / Kit seat hinge nylon	**AI0006800R**	4,13
Conj. fijación bisagras nyl asiento inodoro / Kit seat nylon hinge fix	**AI0007400R**	1,98

Flash Estudio

		€
Conjunto bisagras blanco / Kit white hinge flasc estudio	**AI0001600R**	2,80
Tope aro (2un) / Kit hoop stop flasc estudio (2u)	**AI0008900R**	0,58
Tope tapa asiento (2u) / Kit stp. vover flash estudio samb (2u)	**AI0011400R**	0,41

Varias series

		€
Topes de plástico aro/tapa asiento (4 un) / Kit stopper white (4un)	**AI0009100R**	1,25
Topes de plástico tapas bidé (2 un) / Kit round white lid stop (2u)	**AI0009000R**	1,25
Topes asiento gris (2 un) / Kit seat ring stop dama gray (2u)	**AI0009300R**	0,98

(1) Conjunto de bisagras / Hinges set
(2) Conjunto fijación bisagras / Hinges fixation set

Espacios públicos / Public spaces

Accesibilidad / Accessibility
343 **Access**
347 **Access Pro**
348 **Access Comfort**
349 **Public Touchless**
350 **Public**
351 **Ona**
352 **Victoria Pro**

Urinarios / Urinals
354 **Site**
355 **Proton**
357 **Euret**
359 **Spun**
360 **Hall**
361 **Chic**
362 **Mural & Urinett**
363 **Urito, Mini, Wing & Track**
364 **Divo**

Griferías electrónicas / Electronic faucets
365 **Ona-E**
366 **Cala-E**
367 **L90-E**
368 **M3-E**
369 **L70-E**
370 **L30-E**
371 **Atlas-E**
372 **L20-E**
372 **L20 Connect**
373 **M2-E**
374 **Loft-E**
375 **Loft Connect**
376 **Sentronic-E**
377 **Sentronic-R**
378 **Sentronic-S**
379 **Sentronic-S Connect**
380 **Sentronic-V**
380 **Vortex**
381 **Moai-E**
382 **Otras series de griferías electrónicas /** Other electronic faucets

Griferías temporizadas / Self-Closing faucets
383 **Instant**
384 **Instant Care**
385 **Instant Foot**
386 **Instant Pro**
387 **Fluent**
388 **Sprint-N**
390 **Sprint**
391 **Avant**
394 **Otras series de griferías temporizadas /** Other self-closing faucets

Fluxores / Fluxors
395 **Fluxor Gem**
396 **Aqualine Basic**
396 **Aqualine Plus**
397 **Aqualine**
398 **Aqualine Empotrado**
399 **Aqualine Confort**
400 **Fluxores de empotrar /** Built-in flush valves
401 **Otras series de fluxores /** Other fluxors

Vertederos / Slop hoppers
401 **Vertederos /** Slop hoppers

Tanque universal / Universal tank
402 **Tanque Universal /** Universal tank



Access

Taza suspendida rimless / WC wall-hung rimless

TAZA SUSPENDIDA RIMLESS
Wall-hung WC pan rimless

A346236000

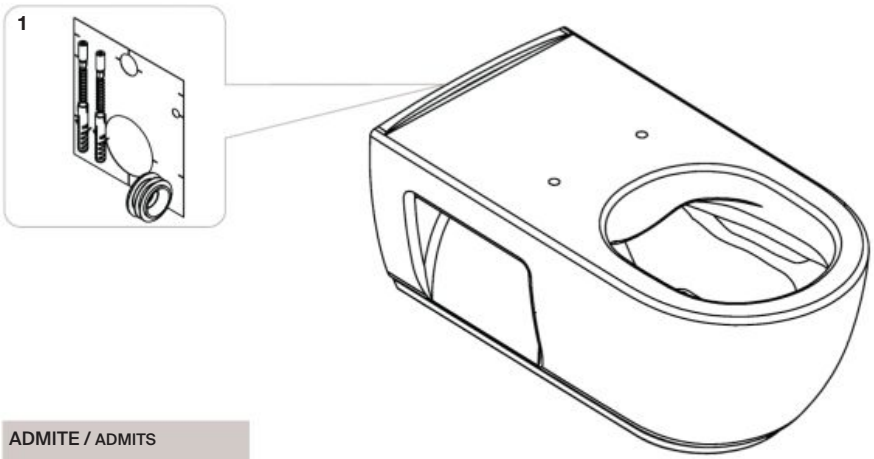

ADMITE / ADMITS

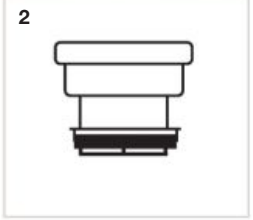

		€
1	**AV0062300R**	7,83
2	**AV0007800R**	8,11

Asiento y tapa caida amortiguada / Seat & cover soft close

Asiento y tapa
caida amortiguada slim
Seat & cover soft close slim

A801C4200U



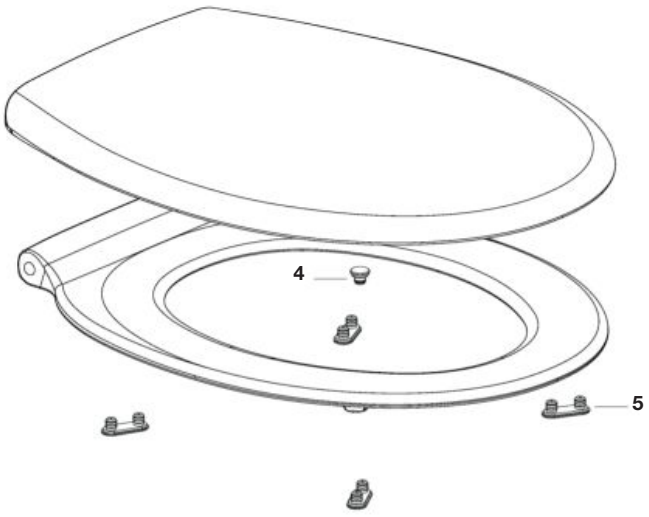

			€
3		**AI0018600R**	5,15
4	2 un	**AI0018700R**	2,00
5	4 un		

Access

Access PE

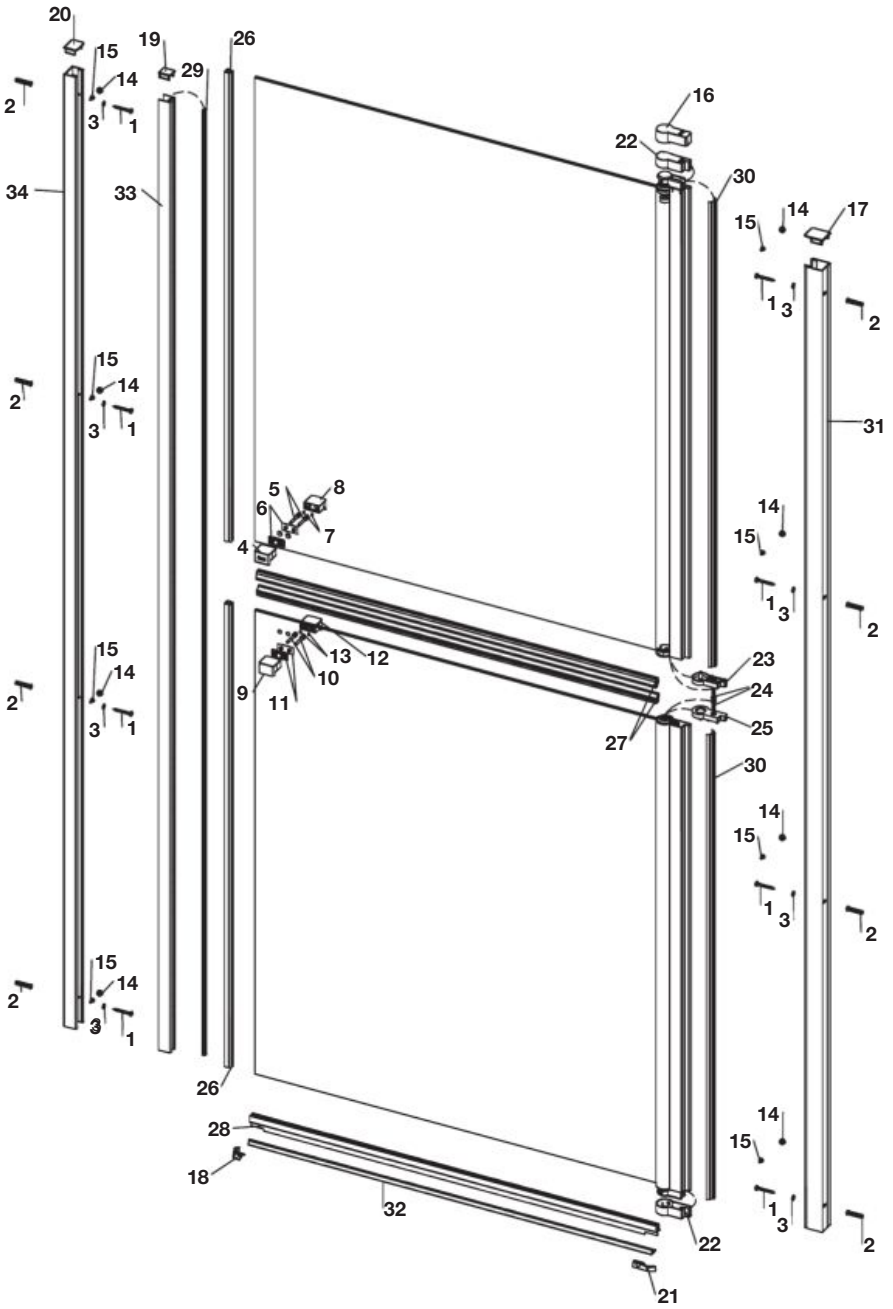

			€
1	4 un		
2	4 un	**AM99262900**	10,30
3	4 un		
4			
5	2 un		
6	2 un	**AM99345602**	25,60
7			
8	2 un		
9			
10	2 un		
11	2 un	**AM99345702**	25,40
12			
13	2 un		

			€
14	4 un	**AM99265000**	37,30
15	4 un		
16		**AM99265102**	14,00
17			
18	2 un		
19		**AM99265202**	14,20
20			
21	2 un	**AM99265302**	27,30
22	2 un	**AM99266202**	16,30
23			
24		**AM99345802**	20,30
25	2 un		
26		**AM99266600**	36,80
27		**AM99346000**	26,90

			€
28		**AM99346100**	26,10
29		**AM99267200**	28,10
30		**AM99267300**	29,40
31		**AM99268702**	67,90
32		**AM99268902**	38,60
33		**AM99269102**	59,10
34		**AM99269202**	55,40
39		**AM99345900** Galgas de montaje	8,57

Access

Access PLF

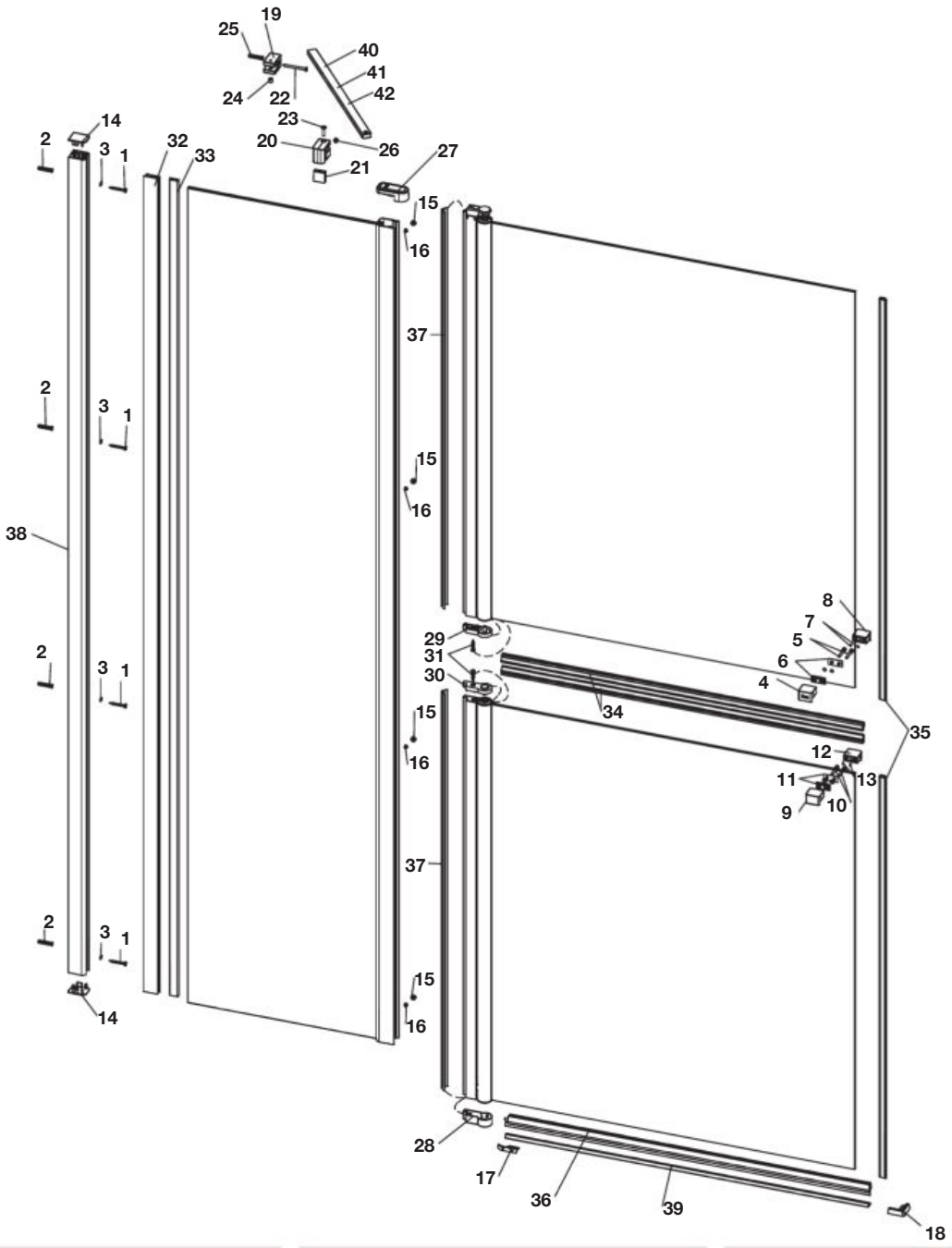

			€
1	4 un		
2	4 un	**AM99262900**	10,30
3	4 un		
4			
5	2 un		
6	2 un	**AM99345602**	25,60
7			
8	2 un		
9			
10	2 un		
11	2 un	**AM99345702**	25,40
12			
13	2 un		
14	2 un	**AM99264800**	11,30

			€
15	4 un	**AM99265000**	37,30
16	4 un		
17	2 un	**AM99265302**	27,30
18			
19			
20			
21			
22		**AM99265602**	35,70
23	2 un		
24			
25			
26			
27		**AM99265702**	14,00
28	2 un	**AM99266202**	16,30

				€
29				
30		**AM99345802**		20,30
31	2 un			
32		**AM99266300**		35,40
33		**AM99266400**		34,90
34		**AM99346000**		26,90
35	2 un	**AM99288400**		20,40
36		**AM99346100**		26,10
37		**AM99267300**		29,40
38		**AM99268202**		70,60
39		**AM99268902**		38,60
40		**AM99269302**	350 mm	11,50
41		**AM99269402**	200 mm	8,56
42		**AM99269502**	1000 mm	27,00
48		**AM99345900**	Galgas de montaje	8,57

Access

Access PL

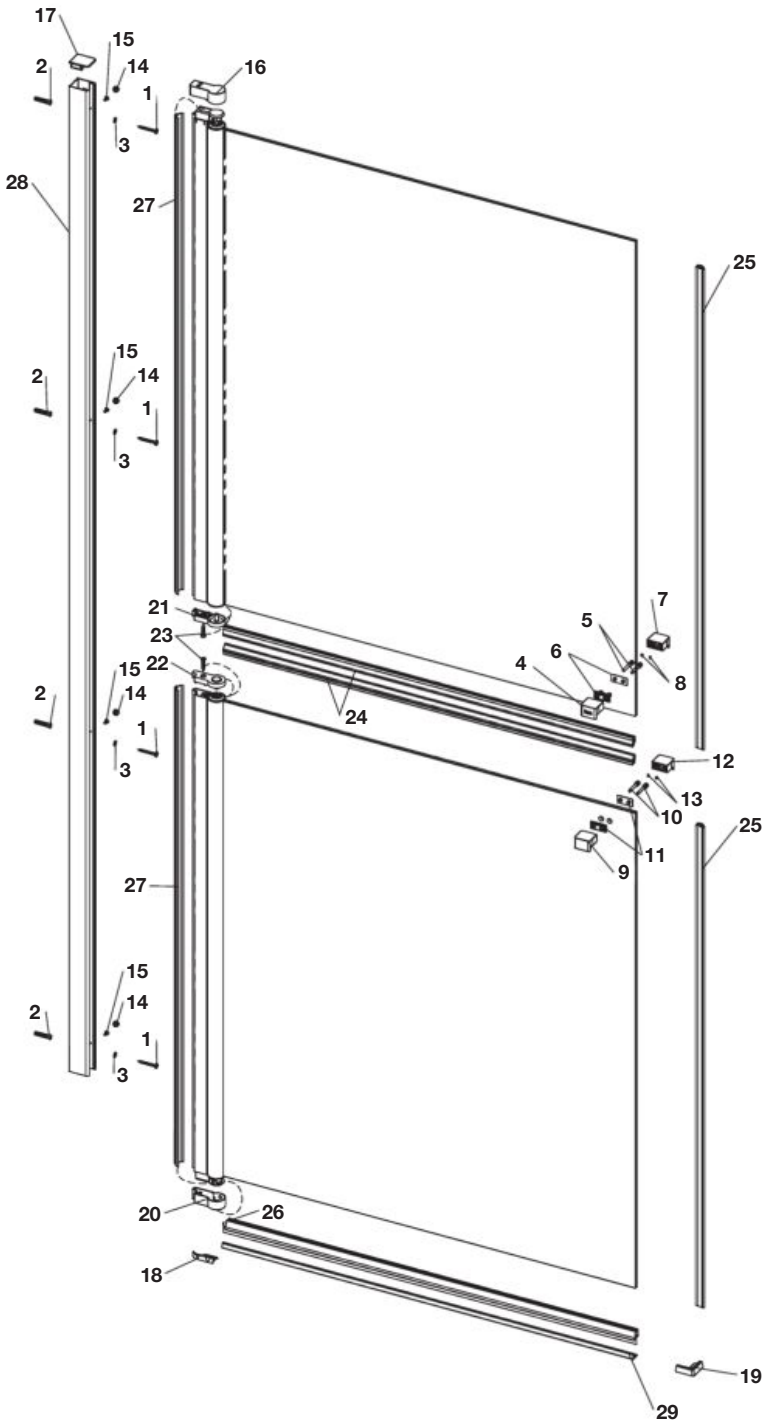

			€
1	4 un		
2	4 un	**AM99262900**	10,30
3	4 un		
4			
5	2 un		
6	2 un	**AM99345602**	25,60
7			
8	2 un		

			€
9			
10	2 un		
11	2 un	**AM99345702**	25,40
12			
13	2 un		
14	4 un	**AM99265000**	37,30
15	4 un		
16		**AM99265102**	14,00
17			
18	2 un	**AM99265302**	27,30
19			

			€
20		**AM99266202**	16,30
21			
22		**AM99345802**	20,30
23	2 un		
24		**AM99346000**	26,90
25	2 un	**AM99288400**	20,40
26		**AM99346100**	26,10
27		**AM99267300**	29,40
28		**AM99268702**	67,90
29		**AM99268902**	38,60
34		**AM99345900** Galgas de montaje	8,57

Access Pro

MODELOS DE PRODUCTO ACABADO /
FINISHED PRODUCT MODELS



Recambios comunes / Common spare parts

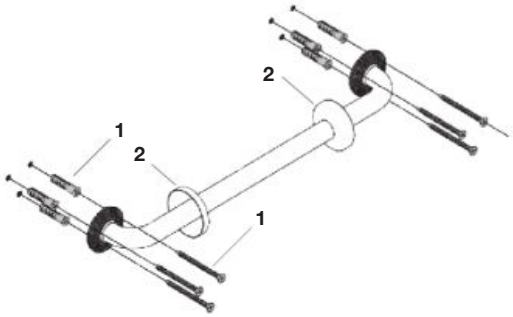

Recambios específicos / Specific spare parts

A816911009

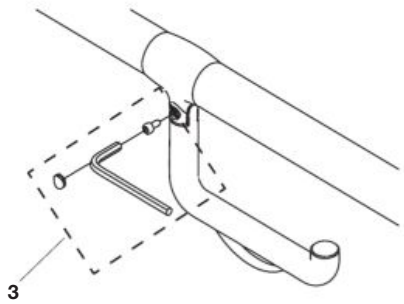

A816965009

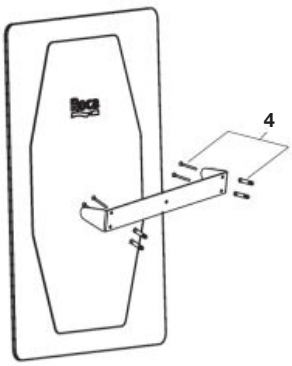

A816964009
A816987009

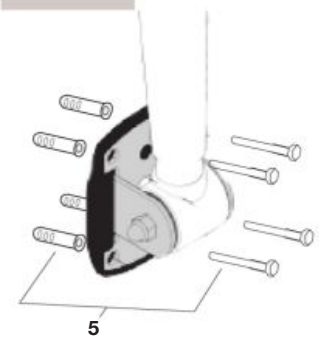

				€
1	4 un	**AA0004200R**	M6 x 70	6,38
2	2 un	**AA0004500R**		12,60
3		**AA0004400R**		1,73
4	4 un	**AA0010900R**	M4 x 38	3,52
5	4 un	**AA0010500R**	M8 x 70	18,00

Access Comfort

Recambios específicos / Specific spare parts

MODELOS DE PRODUCTO ACABADO /
FINISHED PRODUCT MODELS



A816930001



A816931001



A816933001



A816906009



A816910009



A816911009



A816913009



A816914009



A816915009

A816933001

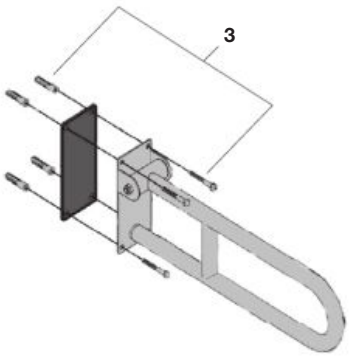

A816910009

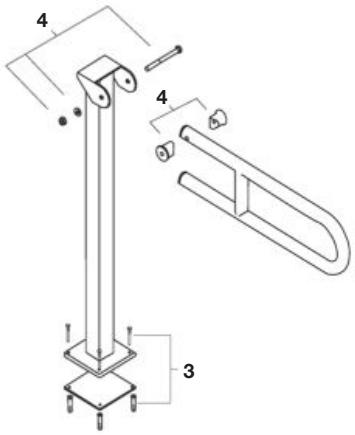

A816911009

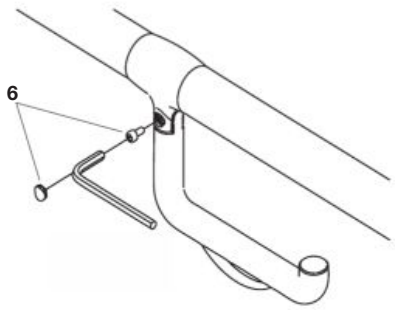

A816915009

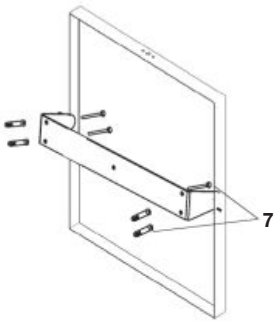

A816913009

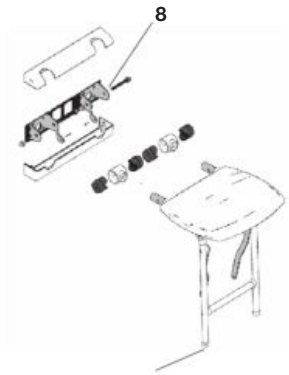

				€
3	4 un	**AA0010500R**	M8 x 70	18,00
4		**AA0010400R**		21,70
6		**AA0004400R**		1,73
7	4 un	**AA0010900R**	M4 x 88	3,52
8		**AA0011200R**		28,80

Public Touchless

Dispensador de jabón Public Pro / Soap dispenser Public Pro

A818011000

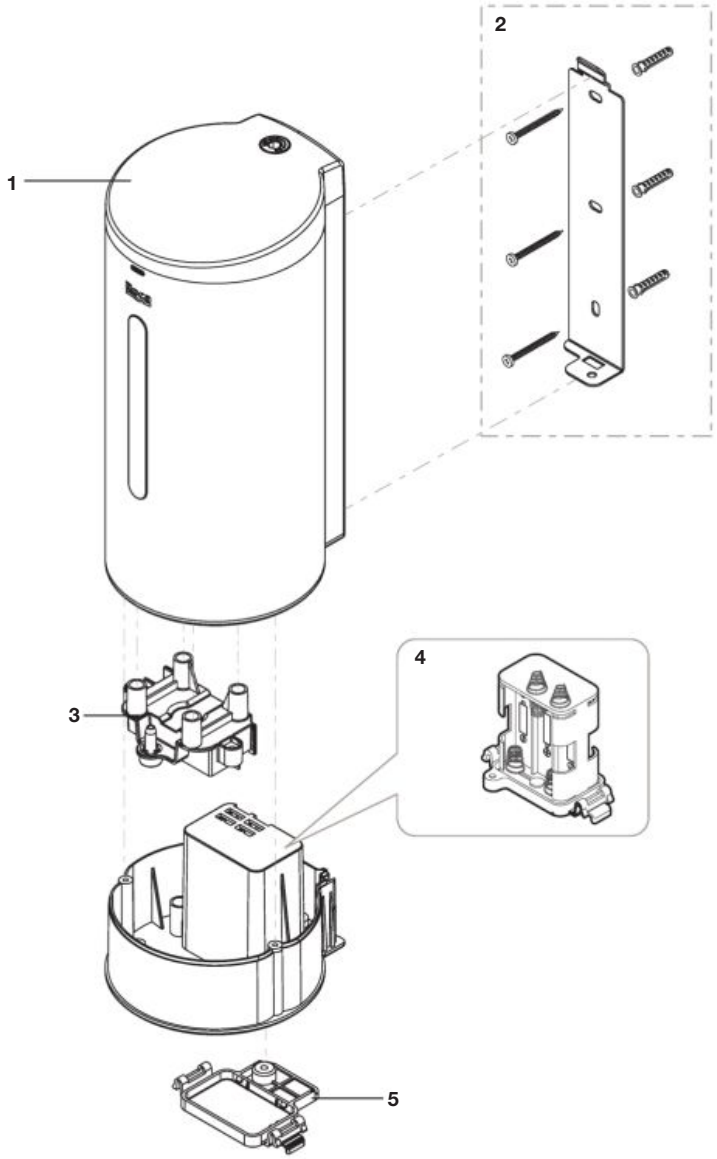

		€
1	**AA0017400R**	1,67
2	**AA0017500R**	0,82
3	**AA0017600R**	15,00
4	**AA0017700R**	3,47
5		

Public

Dispensador de jabón / Soap dispenser

A817402002	1,2 l satinado / satin
A817402001	1,2 l brillante / glossy
A817403002	1,5 l satinado / satin
A817403001	1,5 l brillante / glossy

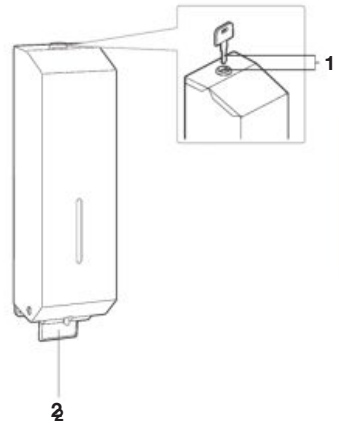

A817404002	800ml satinado / satin
A817404001	800ml brillante / glossy
A817405002	1,25 litros satinado / satin
A817405001	1,25 litros brillante / glossy

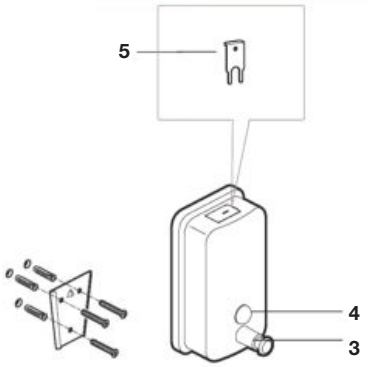

Dispensador de papel / Paper dispenser

A817406002	Ø 260 mm satinado / satin
A817406001	Ø 260 mm brillante / glossy
A817407002	Ø 310 mm satinado / satin
A817407001	Ø 310 mm brillante / glossy

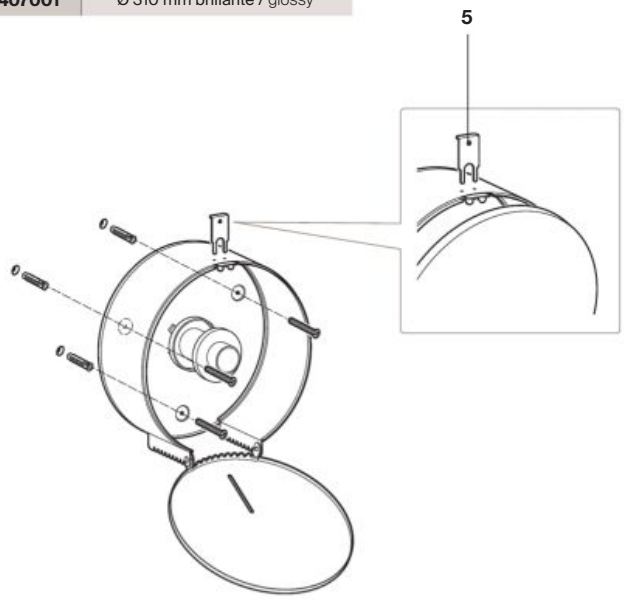

Dispensador de papel / Paper dispenser

A817408002	2 rollos satinado / satin rolls
A817408001	2 rollos brillante / glossy rolls
A817409002	3 rollos satinado / satin rolls
A817409001	3 rollos brillante / glossy rolls

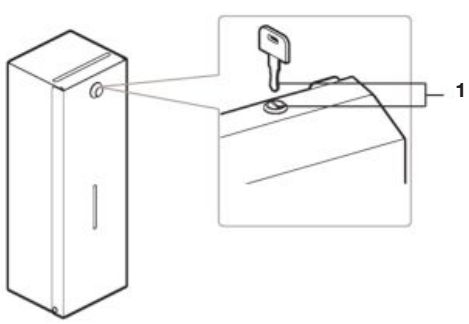

Dispensador de papel / Paper dispenser

A817410002	200 unid. satinado / satin
A817410001	200 unid. brillante / glossy
A817411002	400 - 600 unid. satinado / satin
A817411001	400 - 600 unid. brillante / glossy

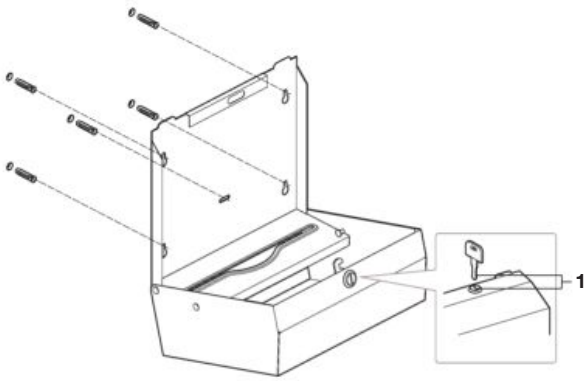

			€
1		**AA0011700R**	4,75
2		**AA0013100R**	2,62
3		**AA0011800R**	14,30
4	4 un	**AA0011900R**	2,25
5	3 un	**AA0012000R**	3,58

Ona

Dispensador de jabón electrónico / Electronic Soap Dispenser

A818014C00	AC
A818020C00	DC

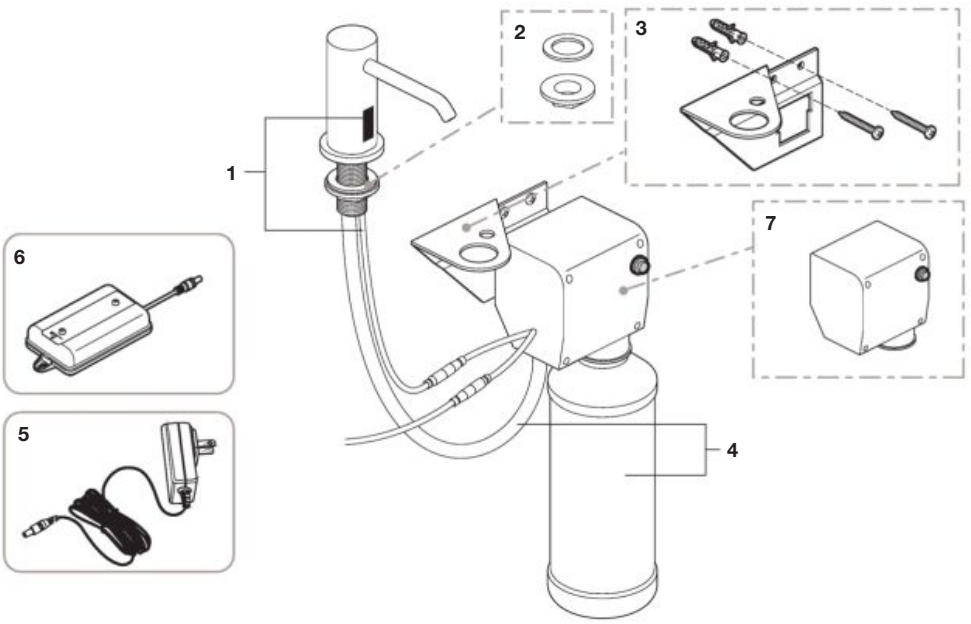

			€
1	**AA0018000R**		47,00
2 3	**AA0018100R**		13,70
4	**AA0018200R**		9,75
5	**AA0018400R**	AC	17,70
6	**AA0018500R**	DC	17,30
7	**AA0018300R**		68,20

Victoria Pro

Grifería para lavabo / Basin faucet

A5A3123

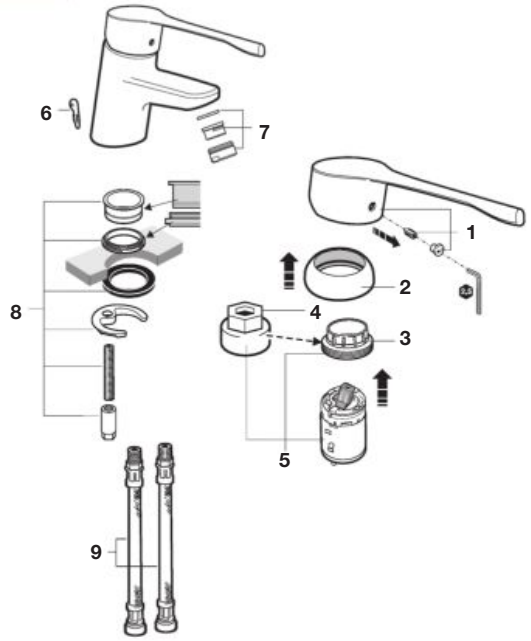

Grifería para lavabo / Basin faucet

A5A7623

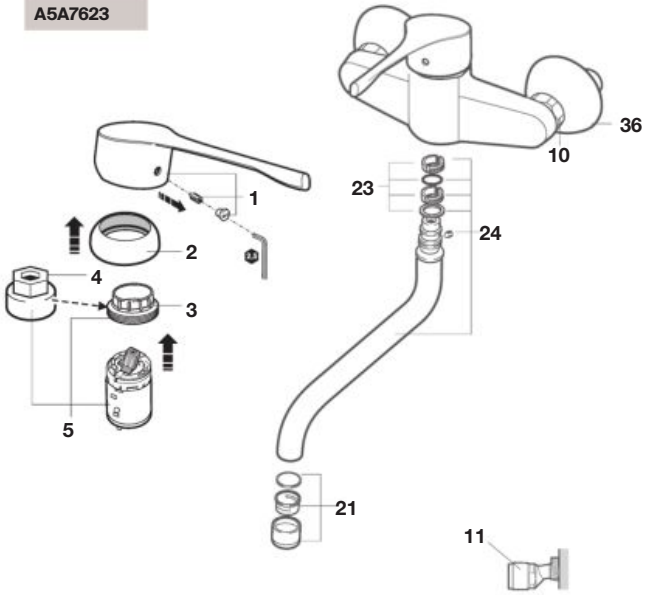

Grifería para baño y ducha / Bath and shower faucet

A5A0123

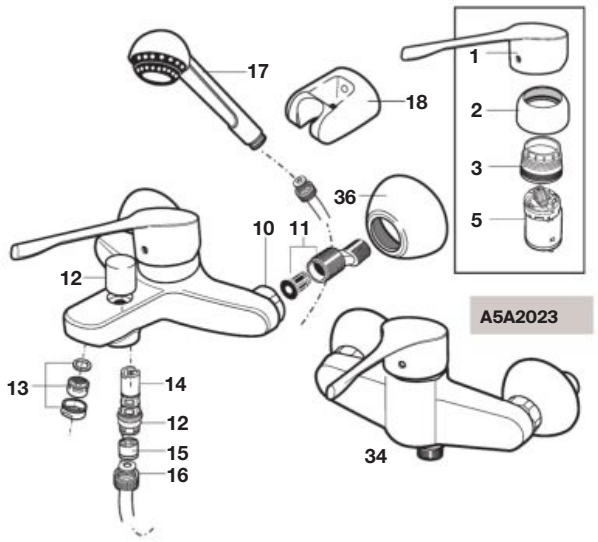

A5A2023

Grifería para cocina / Kitchen faucet

A5A8423

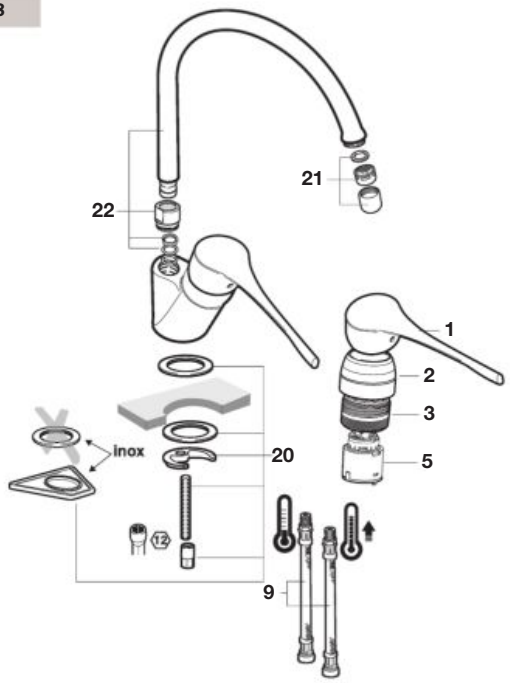

		€
1	**A525003000**	36,40
2	**AG0085300R**	18,00
3	**A525023507**	4,23
4	**A525005407**	7,44
5	**AG0077807R**	42,10
6	**A525004600**	8,20
7	**A525004700**	7,44
8	**A525004403**	7,92
9	**A525020309**	15,00

		€
10	**A525005200**	15,30
11	**A525005308**	13,50
12	**A525023200**	11,90
13	**A525003600**	4,85
14	**A525087300**	18,90
15	**A525005507**	7,44
16	**A525009800**	27,10
17	**A525007700**	8,75
18	**A525007800**	11,10

		€
19	**AG0004407R**	2,23
20	**A525006903**	8,56
21	**A525006600**	7,44
22	**AG0002200R**	45,00
23	**AG0017707R**	5,83
24	**AG0005800R**	100,00
25	**A525027803**	32,40
26	**AG0141207R**	19,20
27	**A525027609**	24,20

		€
28	**A525020409**	18,60
29	**AG0031803R**	36,20
30	**A525008503**	8,41
31	**AG0031700R**	26,70
32	**AG0000703R**	12,00
33	**A525005900**	59,20
34	**AG0005300R**	11,40
35	**AG0039007R**	2,82
36	**AG0085400R**	8,41

Victoria Pro

Grifería para lavabo / Basin faucet

A5A3B5G
A5A3E5G
A5A325G
A5A3D5G

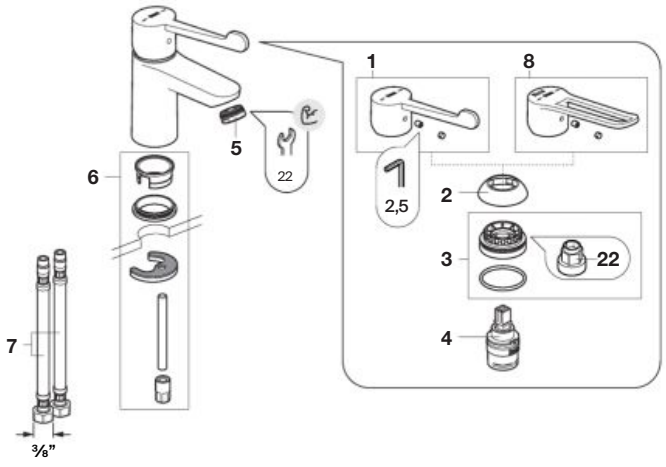

Grifería para lavabo / Basin faucet

A5A015G
A5A025G

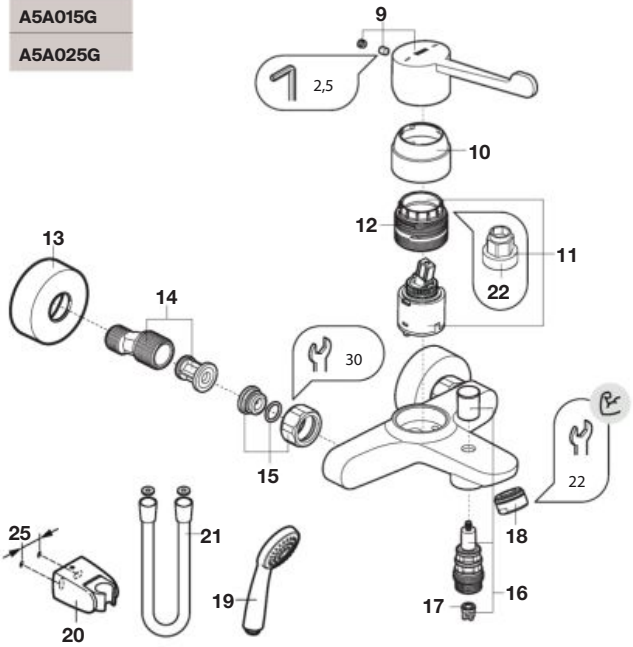

Grifería para baño y ducha / Bath and shower faucet

A5A205G
A5A215G

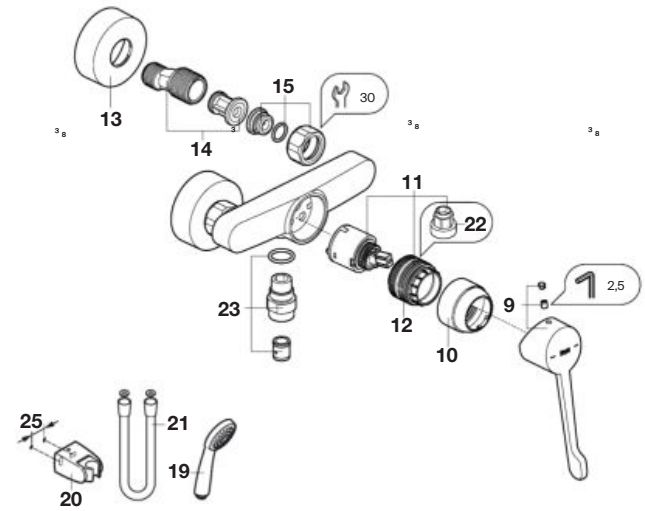

Grifería para cocina / Kitchen faucet

A5A8E5G

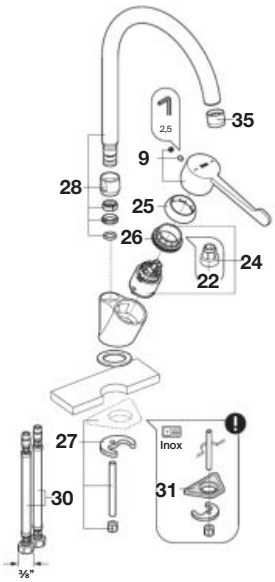

A5A765G

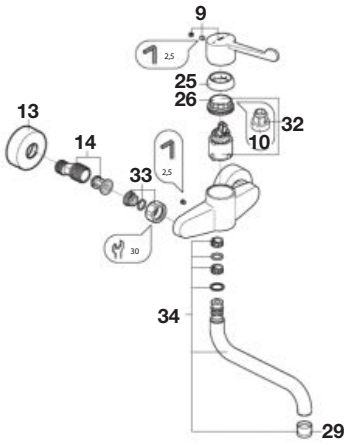

			€
1		**AG0255300R**	20,60
2		**AG0032100R**	27,90
3		**AG0240600R**	5,33
4		**AG0223600R**	10,50
5		**AG0046600R**	11,40
6		**A525004403**	7,92
7		**AG0223800R**	16,20
8		**AG0255400R**	22,10
9		**AG0255500R**	18,80
10		**AG0116400R**	6,18
11		**AG0110607R**	9,98
12		**AG0054107R**	3,75
13	2 un	**AG0116800R**	9,26
14	2 un	**AG0103908R**	17,30
15	2 un	**AG0247600R**	22,70
16		**AG0241600R**	7,53
17	2 un	**AG0134907R**	6,77
18		**AG0260300R**	2,68
19		**AG0082700R**	21,20
20		**AG0105900R**	8,97
21		**AG0270200R**	18,50
22		**A525005407**	7,44
23		**AG0241500R**	5,32
24		**AG0077807R**	42,10
25		**AG0085300R**	18,00
26		**A525023507**	4,23
27		**A525006903**	8,56
28		**AG0190200R**	65,30
29		**A525006600**	7,44
30		**A525020309**	15,00
31		**AG0101207R**	2,35
32		**AG0077807R**	42,10
33	2 un	**AG0002500R**	15,60
34		**AG0255600R**	51,10
35		**AG0277600R**	8,05

Site

Site mural

A359605000

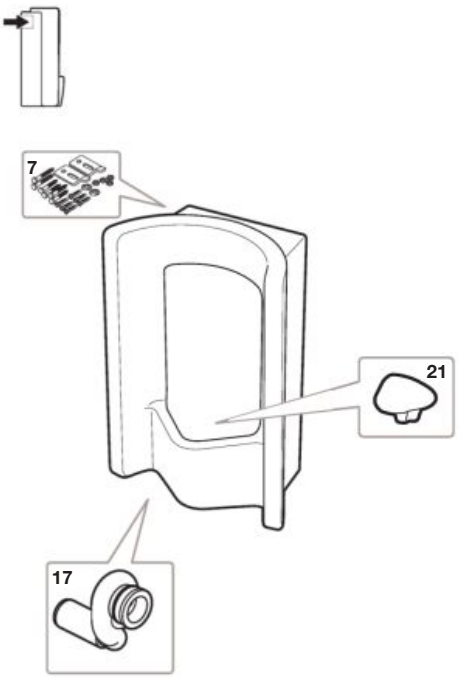

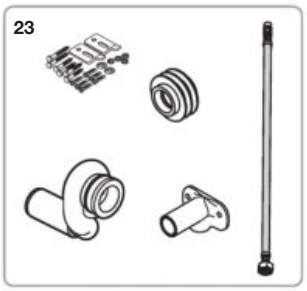

A359607000

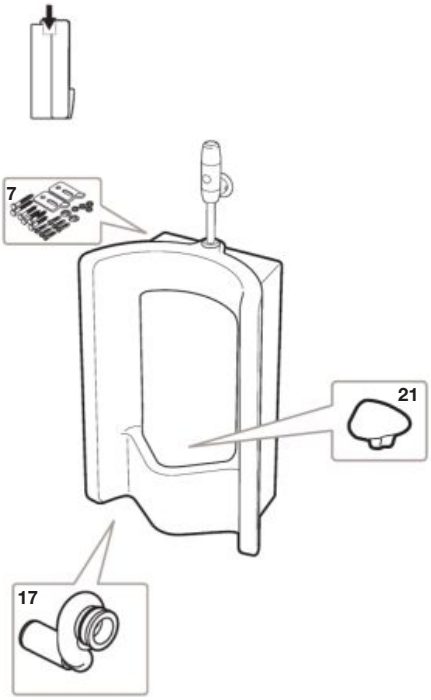



Site lateral

A359601000

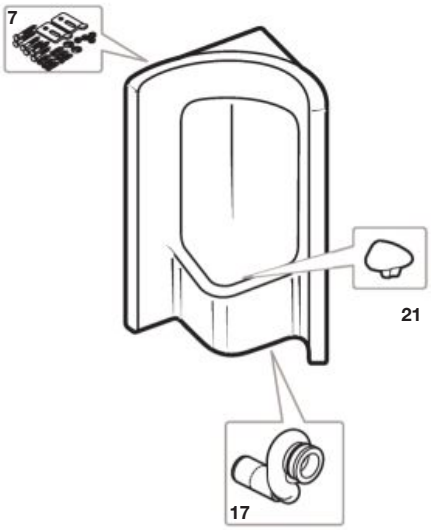

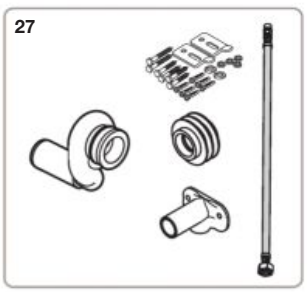

		€
7	**AV0032500R**	6,52
17	**AV0020700R**	44,20
21	**AV0032400R**	18,80
23	**AV0032800R**	60,90
25	**AV0032700R**	132,00
27	**AV0032600R**	127,00

Proton

Urinario Rimless electrónico / Electronic Rimless urinal

A3590J4000	DC
A3590J5000	AC

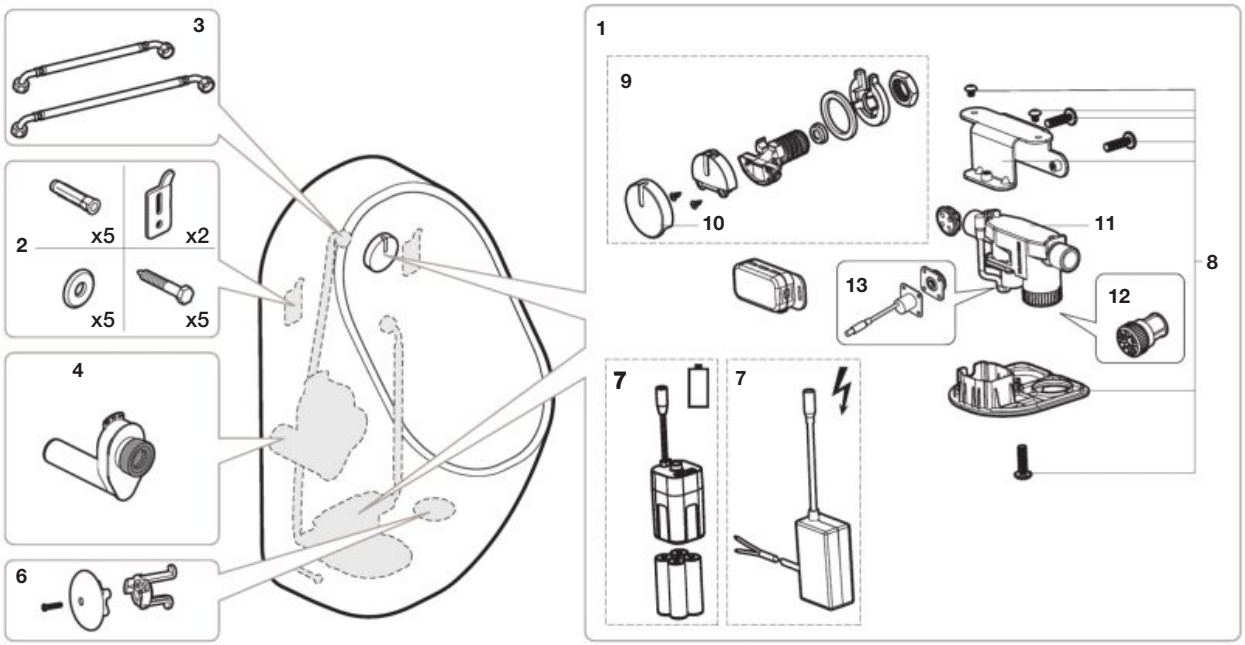

			€
1	**AV0053500R**	DC	226,00
	AV0053600R	AC	264,00
2	**AV0049700R**		6,36
3	**AV0053900R**	600mm	19,90
	AV0053800R	400mm	19,40
4	**AV0029200R**		34,50

			€
6	**AV0053700R**		5,77
7	**AG0089100R**	DC	27,10
	AV0054100R	AC	46,40
8	**AV0054200R**		18,60
9	**AV0054400R**		79,70
10	**AV0054500R**		1,27

		€
11	**AG0102703R**	136,00
12	**AG0102803R**	7,94
13	**AG0093107R**	117,00

Proton

Urinario Rimless alimentación superior / Rimless urinal upper inlet

A3590J2000

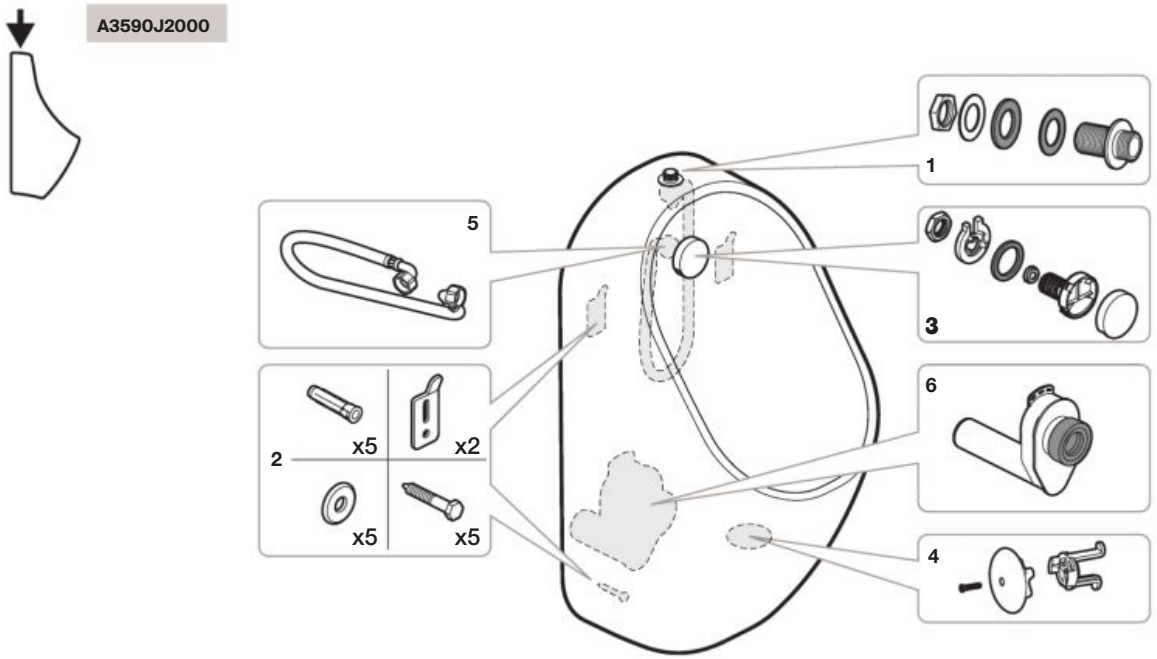

Urinario Rimless alimentación posterior / Rimless urinal back inlet

A3590J3000

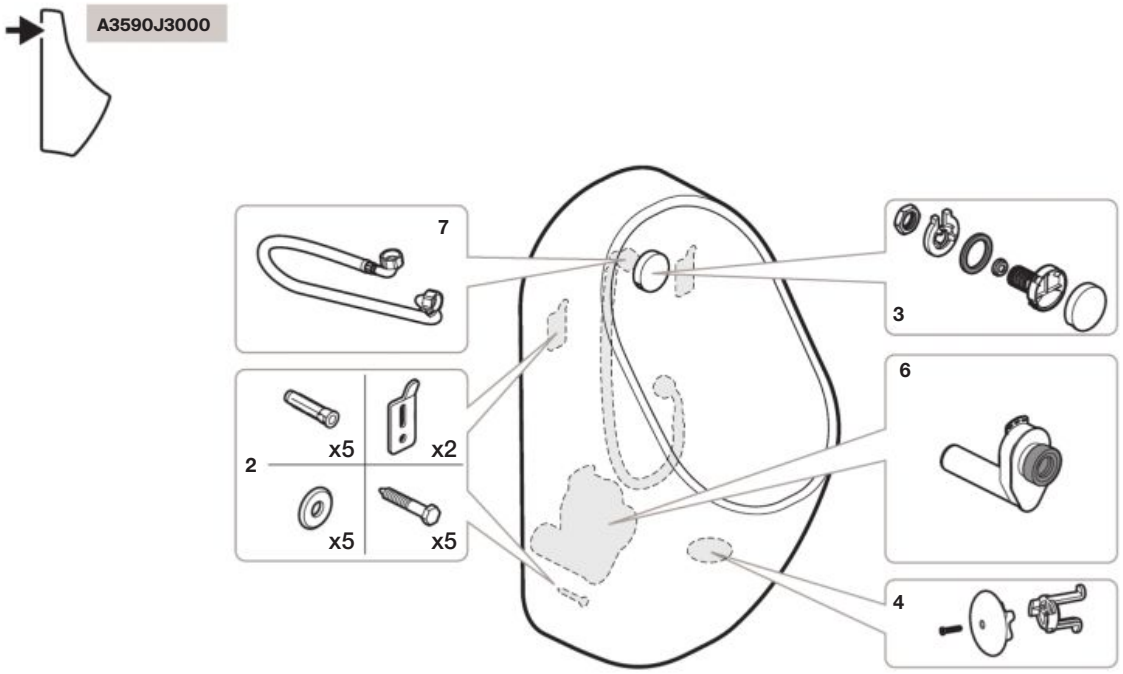

		€
1	**AV0053300R**	52,40
2	**AV0049700R**	6,36
3	**AV0053400R**	11,90
4	**AV0053700R**	5,77

		€
5	**AV0053800R**	19,40
6	**AV0029200R**	34,50
7	**AV0054600R**	19,40

Euret

Urinario electrónico / Electronic urinal

A35945E000	DC
A35945M000	AC

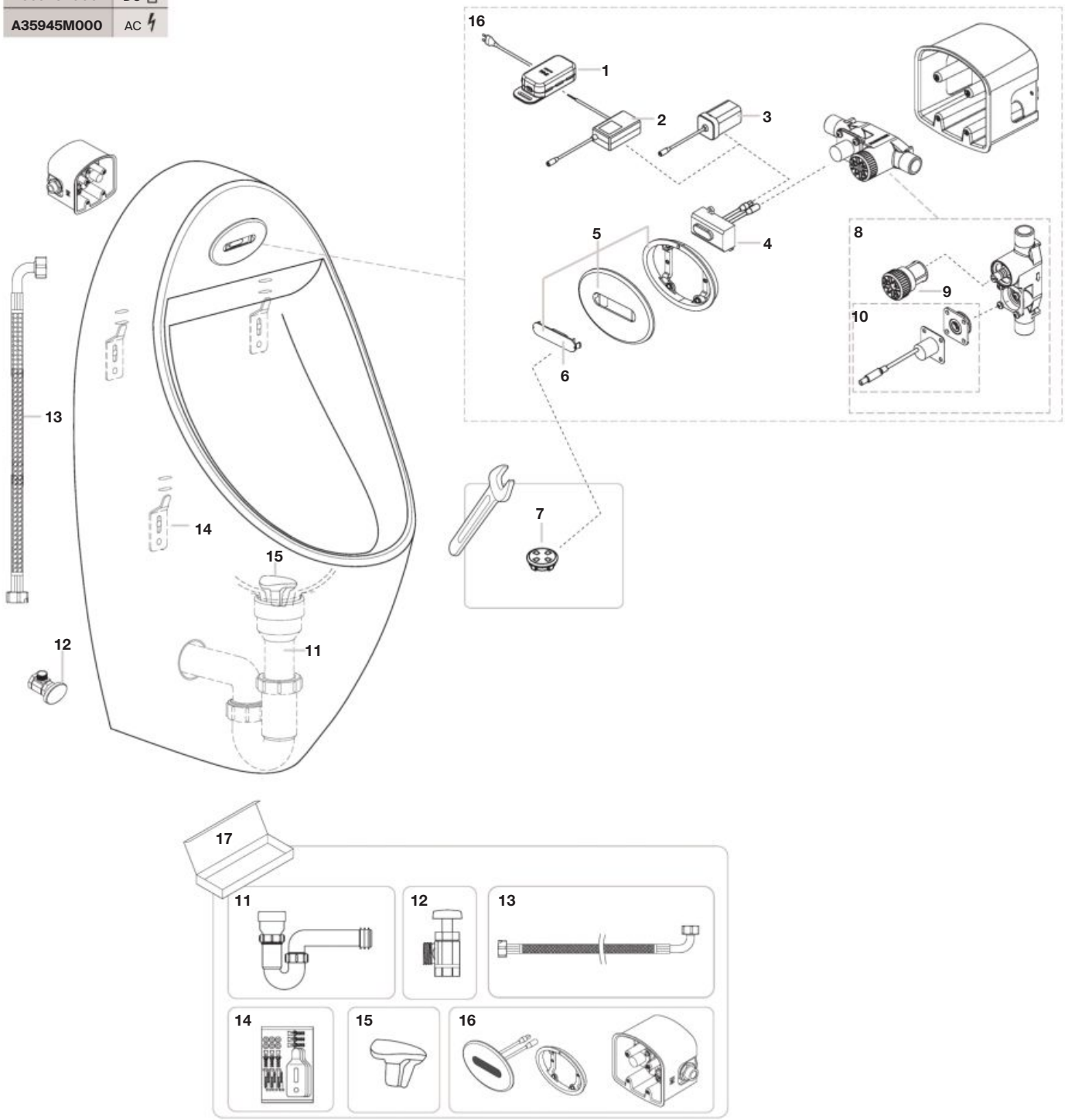

			€
1	**AG0103407R**		10,60
2	**AG0093507R**	AC	87,60
3	**AG0089100R**	DC	27,10
4	**AG0103007R**		64,60
5	**AG0115100R**		34,60
6	**AG0115000R**		3,92

			€
7	2 un	**AG0103507R**	9,42
8		**AG0102703R**	136,00
9		**AG0102803R**	7,94
10		**AG0093107R**	117,00
11		**AV0028307R**	25,30
12		**AV0028400R**	25,60

			€
13	**AV0028500R**		22,30
14	**AV0017500R**		3,91
15	**AV0028200R**		52,60
17	**AV0008300R**	AC	408,00
	AV0008700R	DC	367,00

Euret

Urinario alimentación posterior / Urinal back inlet



A35945F000

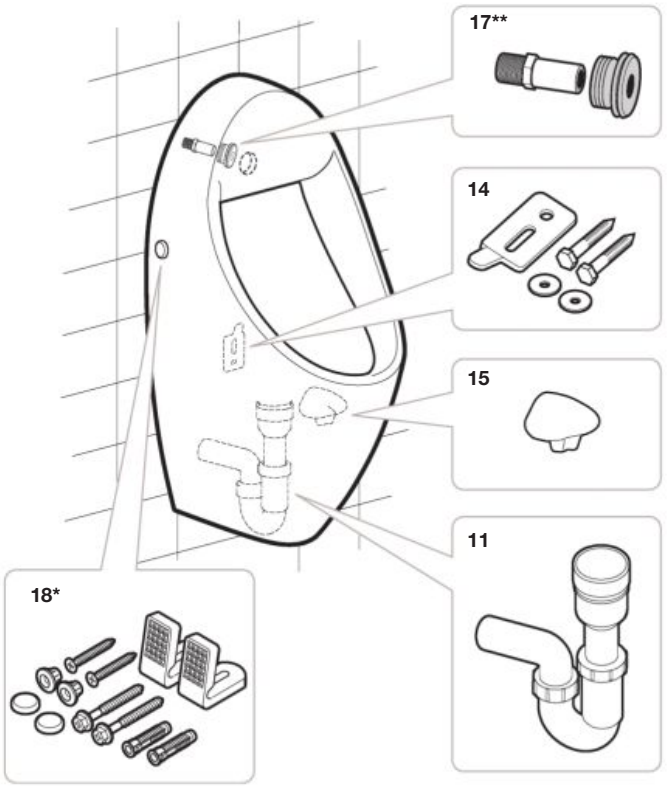

				€
11		**AV0028307R**		25,30
14	3 un	**AV0017500R**		3,91
15		**AV0028200R**		52,60
17**		**AV0028103R**	< 2015	13,60
		AV0020403R	> 2015	7,20
18*		**AV0026800R**	> 2015	9,95
11 14 15 17**		**AV0008400R**	< 2015	40,60

18* Fijaciones laterales para modelos posteriores a 2015.
17** Atención a manguito de entrada posterior específico según año.
18* Lateral fixings for models posterior 2015.
17** Attention to posterior inlet sleeve specfic by year.

Urinario alimentación superior / Urinal upper inlet



A35945H000

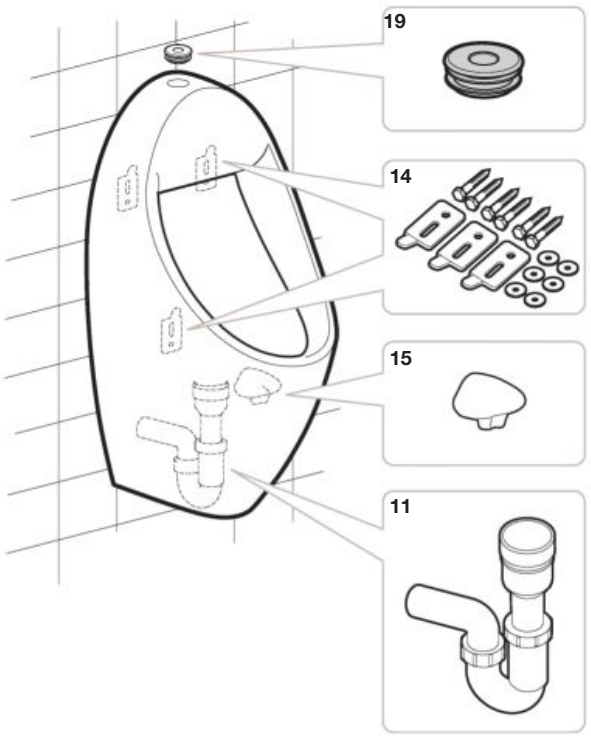

			€
11	**AV0028307R**	25,30
14	**AV0017500R**	3,91
15	**AV0028200R**	52,60
19	**AV0016300R**	3,10

		€
11 14 15 19	**AV0008500R**	31,80

Spun

Urinal



A353147000
A353148000



A353149000

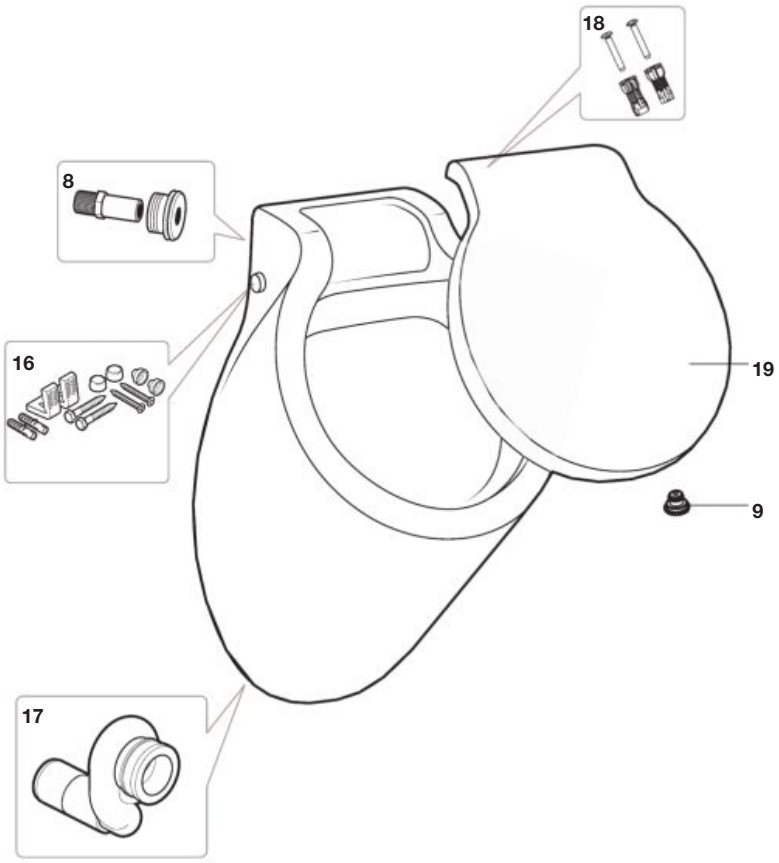

Separador lateral / Side separator

A387091000

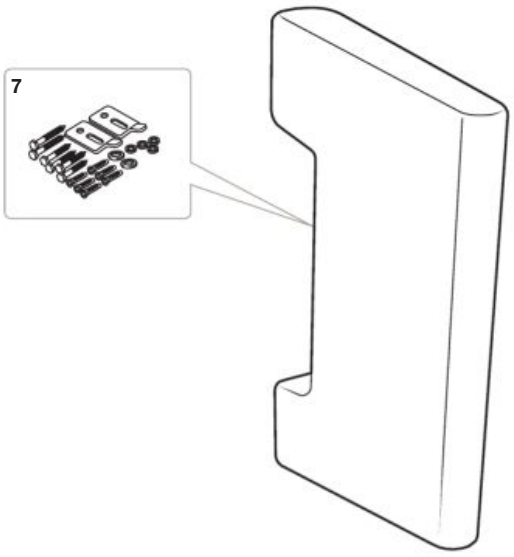

			€
7		**AV0032500R**	6,52
8		**AV0020403R**	7,20
9	2 un	**AI0009000R**	1,25
16		**AV0009400R**	6,16
17		**AV0020700R**	44,20
18		**AI0002400R**	3,78

Producto acabado compatible:
Finished product compatible:

		€
19	**A806140004**	-

Hall

Hall

A353623000
A35362E000

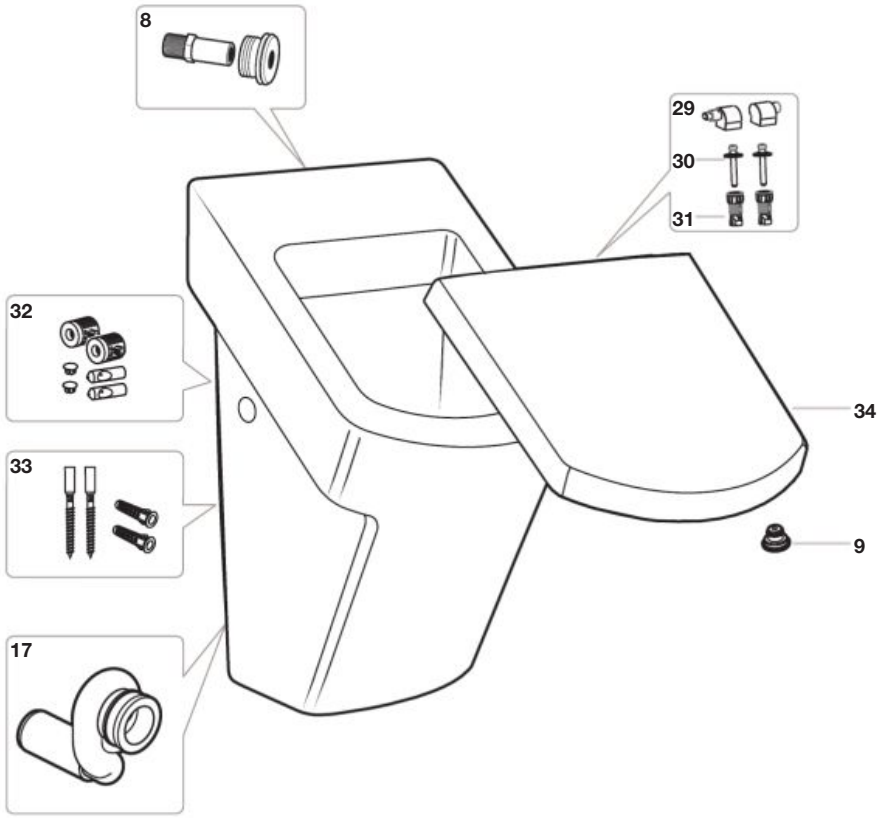

Hall Waterless

A353621000

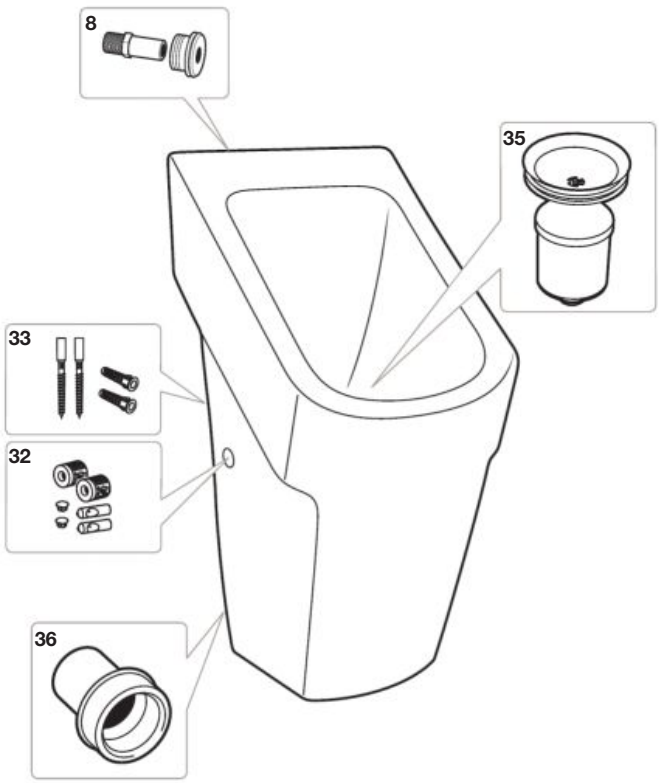

			€
8		**AV0020403R**	7,20
9	2 un	**AI0009000R**	1,25
17		**AV0020700R**	44,20
29		**AI0001700R**	28,70
30	2 un	**AI0000400R**	5,22
31	2 un		
32		**AV0017000R**	88,00
33		**AH0002600R**	2,85
34		**AV0006700R**	55,00
35		**AV0017200R**	179,00
36		**AV0017100R**	30,00

Chic

Urinario alimentación posterior / Urinal back inlet

A35945J



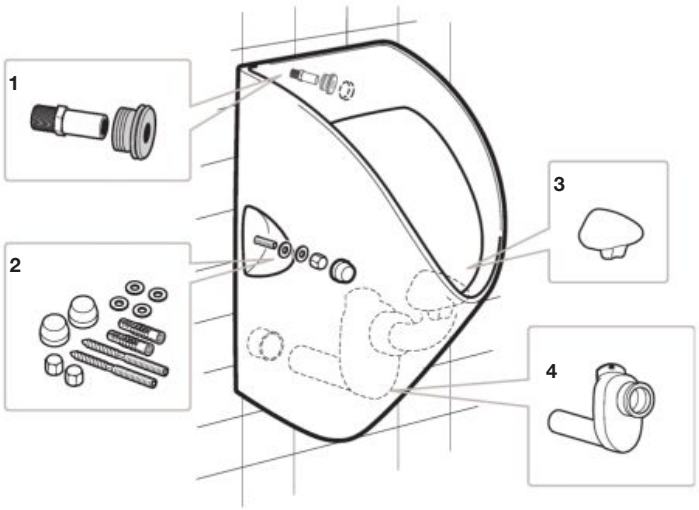

Urinario alimentación superior / Urinal upper inlet

A35945L



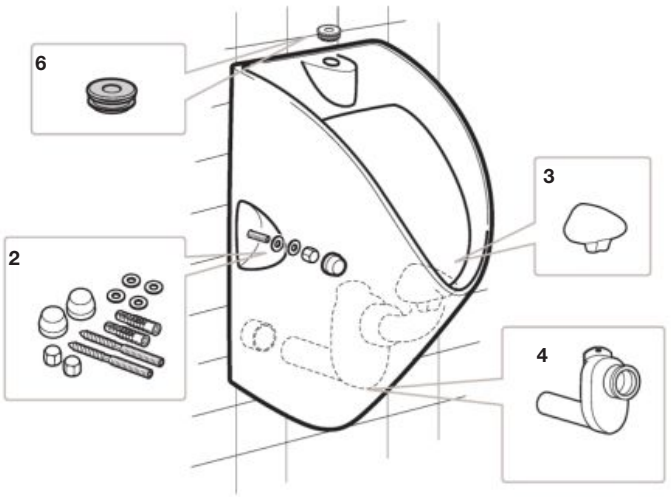

		€
1	**AV0020403R**	7,20
2	**AV0029300R**	26,40
3	**AV0029500R**	17,70
4	**AV0029200R**	34,50
6	**AV0016300R**	3,10

*** Recambios para modelo A35945L anterior a 2015. /** *Spare parts for models A35945J and A35945L before 2015.

Mural & Urinett

Mural

A353330001

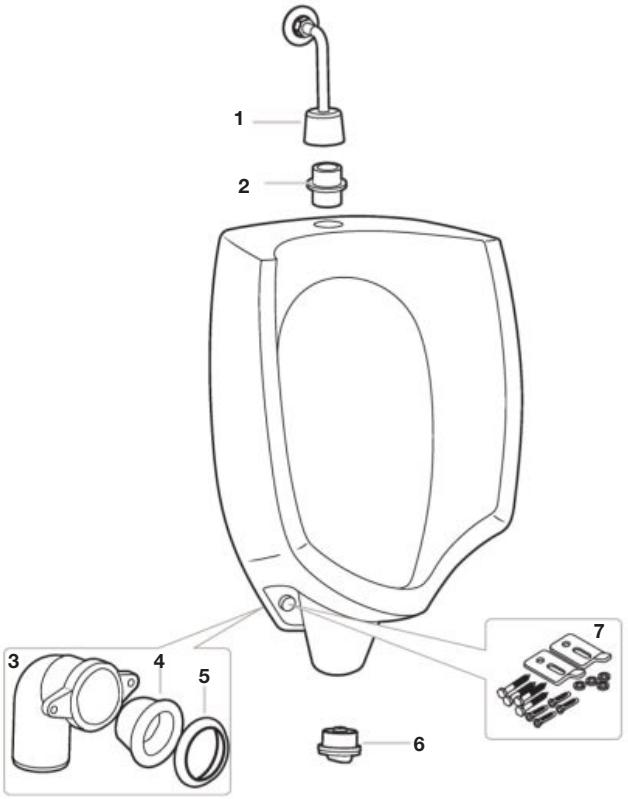

Urinett

A359093..5

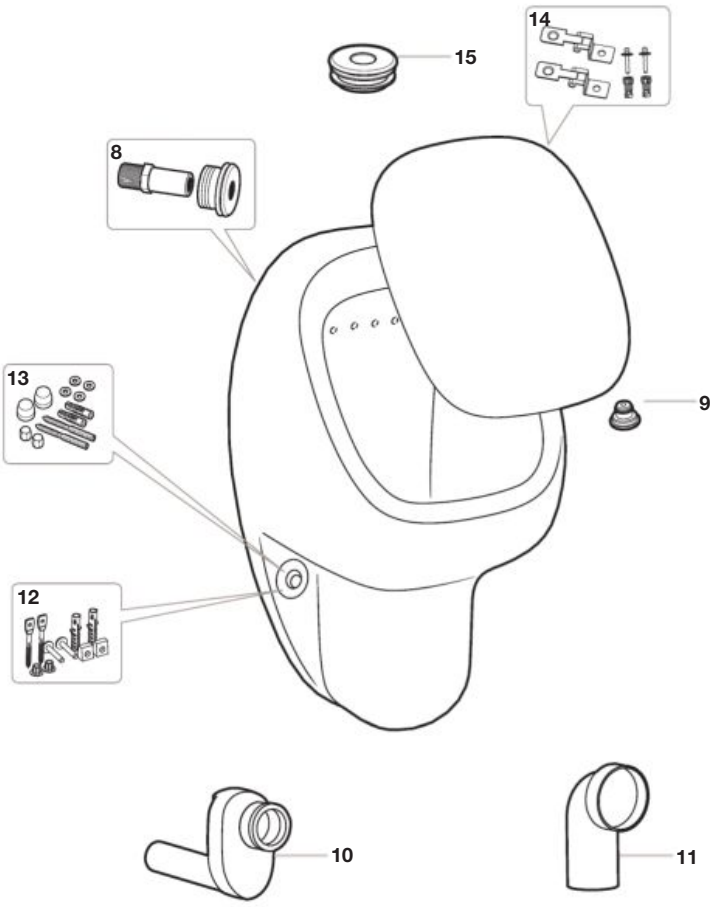

			€
1		**AV0016900R**	35,30
2		**AV0032300R**	7,37
3		**AV0015000R**	63,20
4		**AV0032200R**	3,06
5		**AH0015900R**	2,33
6		**AV0016100R**	2,93
7		**AV0032500R**	6,52
8		**AV0020403R**	7,20
9	2 un	**AI0009000R**	1,25
10		**AV0033000R**	45,60
11		**AV0033100R**	6,83
12		**AV0033200R**	14,70
13			
14		**AI0005300R**	7,37
15		**AV0016300R**	3,10

Urito, Mini, Wing & Track

Urito

A353315..1



Mini

A353145000



Wing

A387090000

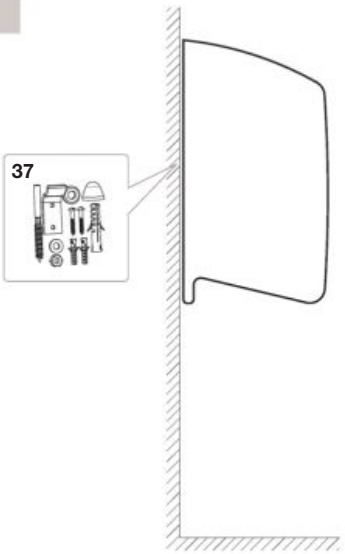

Track

AM25015052

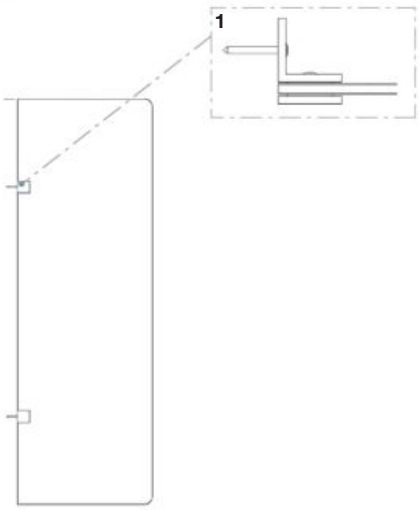

		€
1	**AM99379202**	65,90
15	**AV0016300R**	3,10
37	**AV0033400R**	5,67
38	**AV0016600R**	1,83

Divo

Separador urinario / Urinal divider

AM20104053

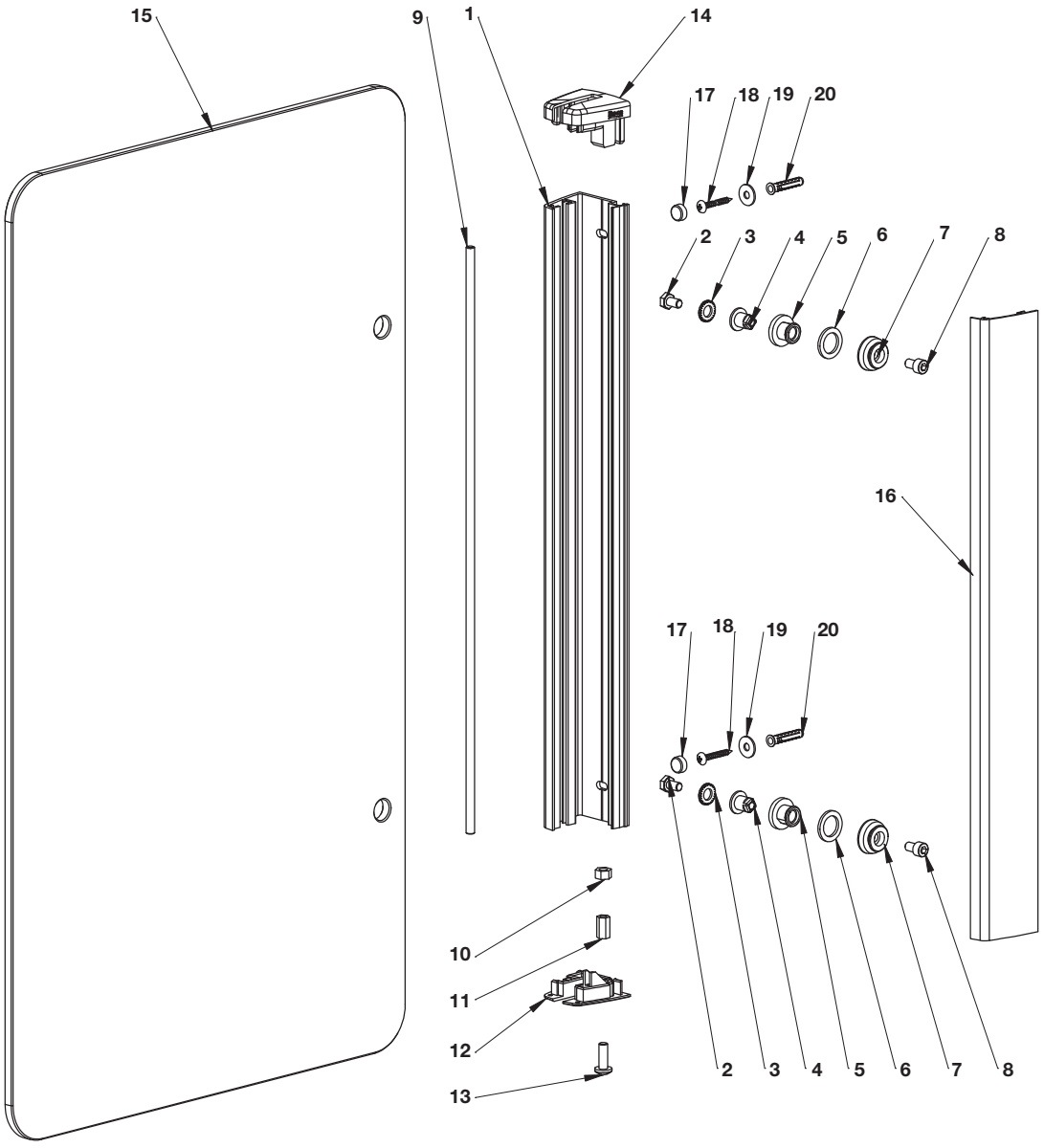

		€
1	**AM99386203**	26,10
2		
3		
4		
5	**AM99386303**	42,00
6		
7		
8		

			€
9	**AM99386500**	425	9,41
10			
11	**AM99386600**		38,90
12			
13			
14	**AM99386703**		19,60
15	**AM99386950**	700	149,00
16	**AM99387103**	450	39,10

		€
17		
18		
19	**AM99387200**	18,30
20		

Ona-E

Grifería electrónica para lavabo / Basin electronic faucet

	PRE-MEZCLA / PRE-MIXED
AC	**A5A559E**
DC	**A5A539E**

	UN AGUA / ONE WATER SUPPLY
AC	**A5A579E**
DC	**A5A569E**

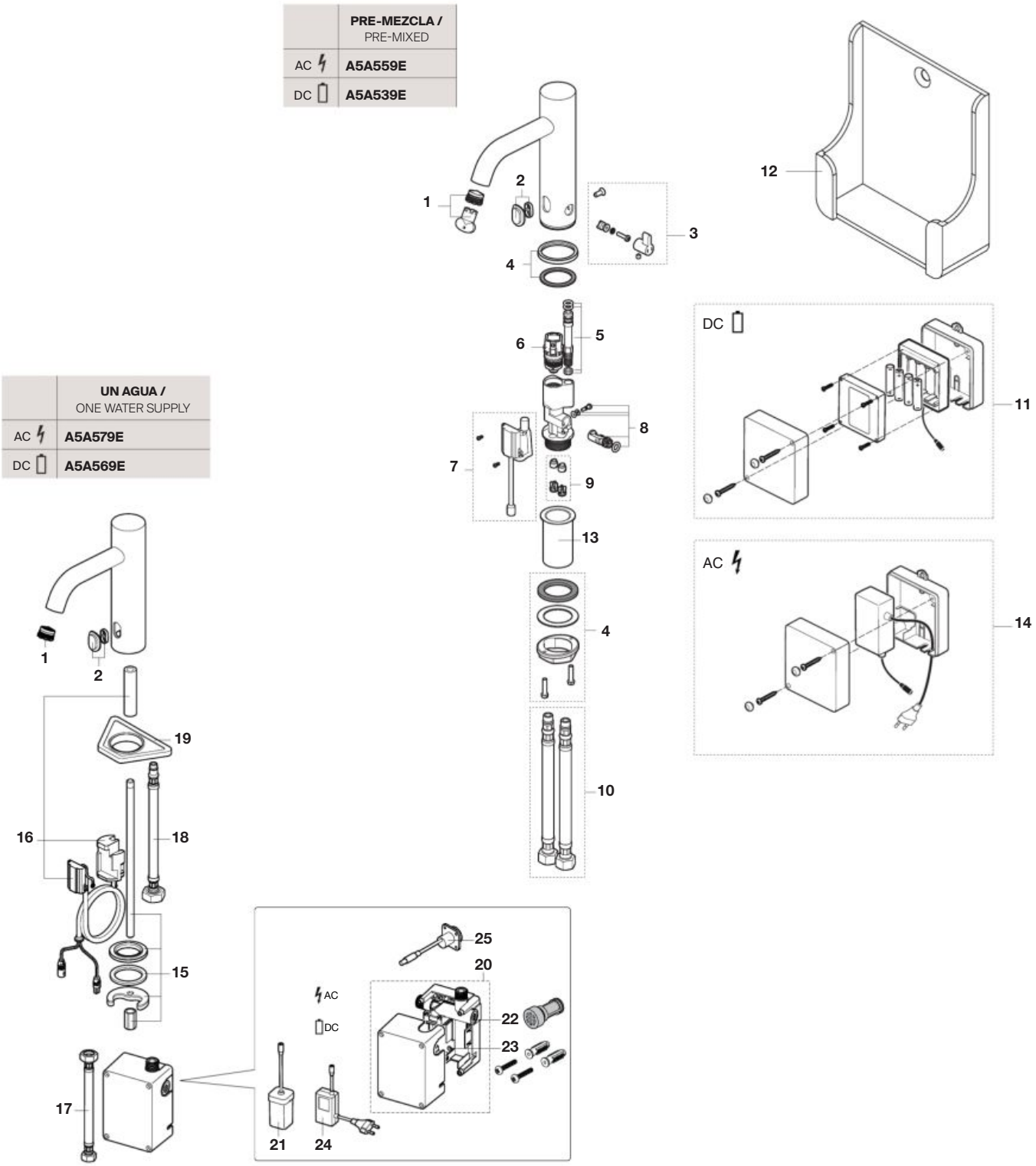

			€
1	**AG0243800R**		15,50
2	**AG0248400R**		7,45
3	**AG0248500R**		10,60
4	**AG0248600R**		15,80
5	**AG0248700R**		6,48
6	**AG0248800R**		150,00
7	**AG0248900R**		77,10
8	**AG0249000R**		10,90
9	**AG0249100R**		12,90
10	**AG0035509R**		19,90
11	**AG0034907R**		28,90
12	**AG0249200R**		3,55
13	**AG0249300R**		16,10
14	**AG0035007R**		89,70
15	**AG0257400R**		-
16	**AG0257300R**	AC	91,10
	AG0257600R	DC	-
17	**A525700609**	1/2" x 3/8"	11,40
	A289424000	1/2" x 1/2"	14,20
18	**AG0103808R**		2,05
19	**AG0101207R**		2,35
20	**AG0257500R**		-
21	**AG0089100R**		27,10
22	**AG0093207R**		12,80
23	**AG0092907R**		2,35
24	**AG0093507R**		87,60
25	**AG0093107R**		117,00

Cala-E

Grifería electrónica para lavabo / Basin electronic faucet

	PRE-MEZCLA / PRE-MIXED
AC ϟ	**A5A556E**
DC ▯	**A5A536E**

	UN AGUA / ONE WATER SUPPLY
AC ϟ	**A5A576E**
DC ▯	**A5A566E**

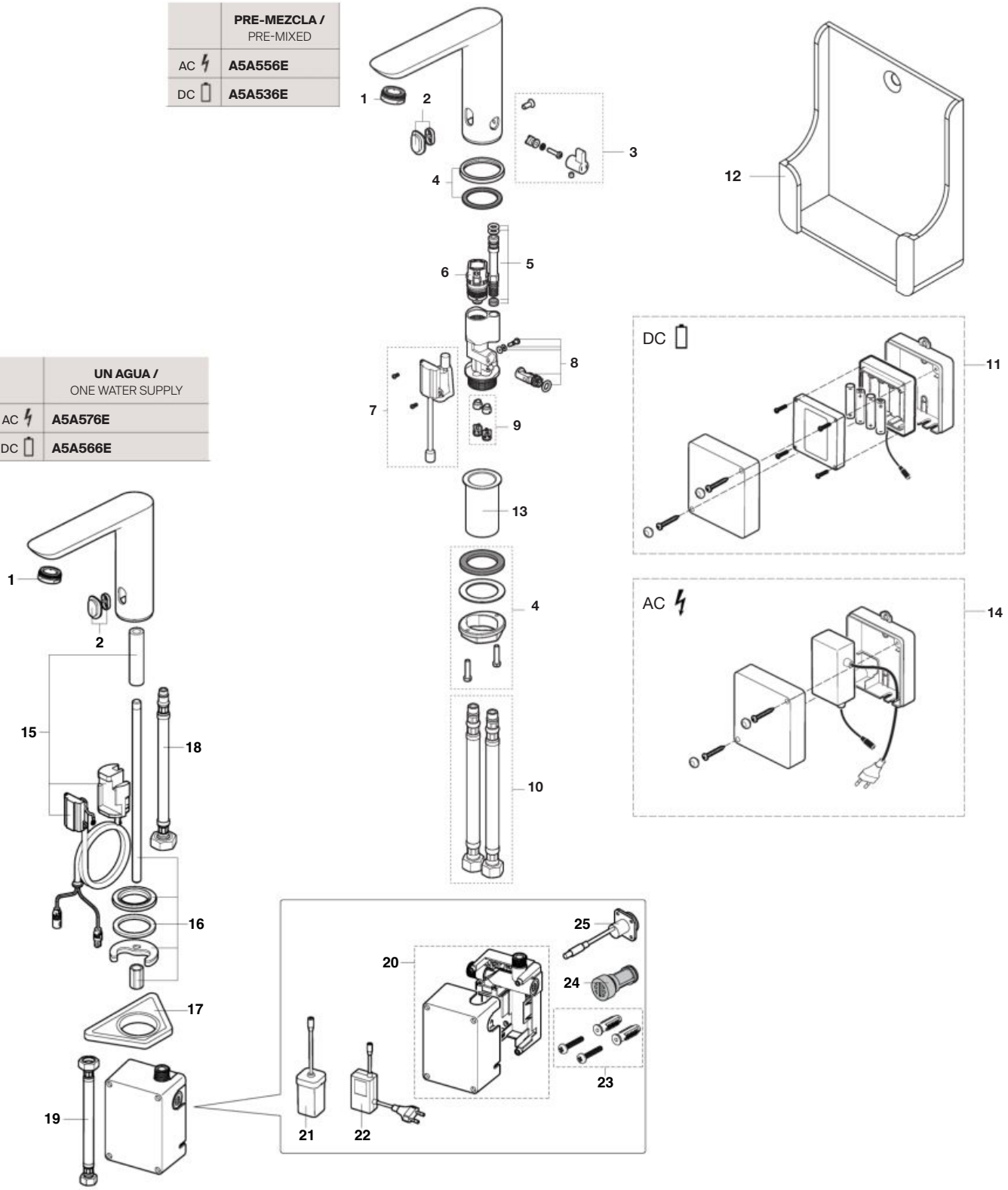

			€
1	**AG0243800R**		15,50
2	**AG0248400R**		7,45
3	**AG0248500R**		10,60
4	**AG0248600R**		15,80
5	**AG0242700R**		6,48
6	**AG0242800R**		150,00
7	**AG0242900R**		77,10
8	**AG0249000R**		10,90
9	**AG0249100R**		12,90
10	**AG0035500R**		18,90
11	**AG0034907R**		28,50
12	**AG0249200R**		225
13	**AG0249300R**		1210
14	**AG0035007R**		8240
15	**AG0257300R**	AC	91,10
	AG0257600R	DC	-
16	**AG02574..R**		-
17	**AG0101207R**		2,35
18	**AG0103808R**		2,05
19	**A525700609**	1/2" x 3/8"	11,40
	A289424000	1/2" x 1/2"	14,20
20	**AG0257500R**		-
21	**AG0089100R**		27,10
22	**AG0093207R**		12,80
23	**AG0092907R**		2,35
24	**AG0093207R**		12,80
25	**AG0093107R**		117,00

L90-E

Grifería electrónica para lavabo / Basin electronic faucet

DC	**A5A5301**
AC	**A5A5501**

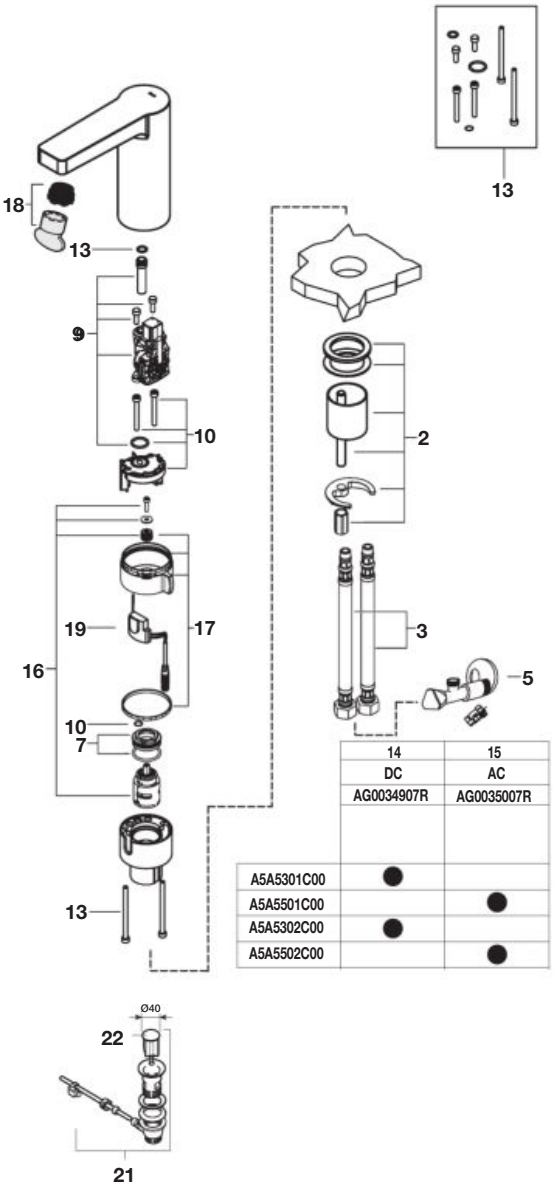

	14 DC AG0034907R	15 AC AG0035007R
A5A5301C00	●	
A5A5501C00		●
A5A5302C00	●	
A5A5502C00		●

Grifería electrónica para lavabo (un agua) / Basin electronic faucet (one water supply)

DC	**A5A5601**
AC	**A5A5701**

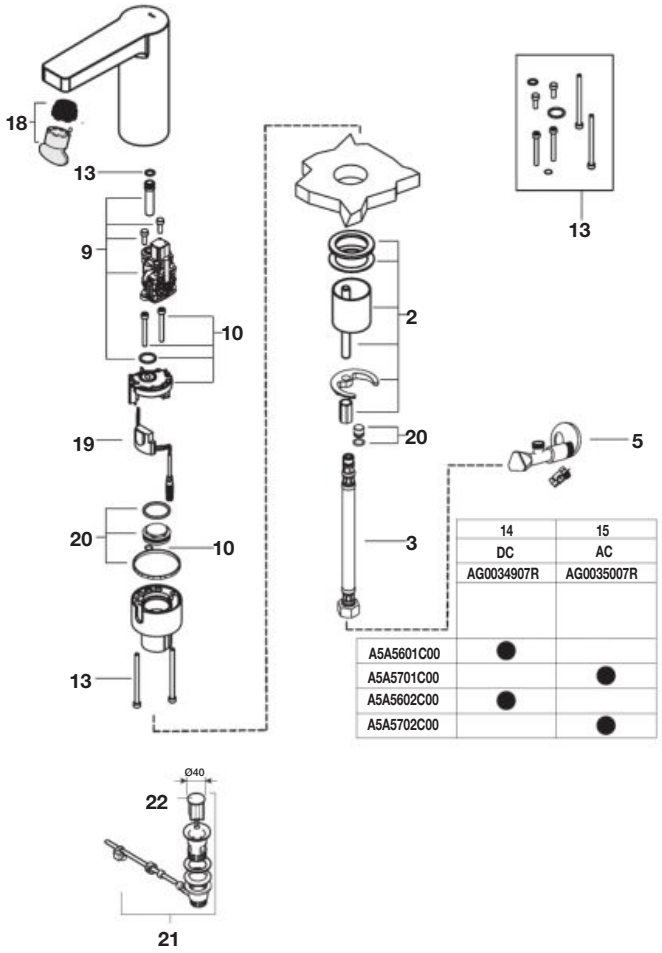

	14 DC AG0034907R	15 AC AG0035007R
A5A5601C00	●	
A5A5701C00		●
A5A5602C00	●	
A5A5702C00		●

		€
1	**A525003307**	7,92
2	**AG0033903R**	73,50
3	**AG0035509R**	19,90
4	**AG0034003R**	9,12
5	**AG0078200R**	30,90

		€
6	**AG0034103R**	50,00
7	**AG0034203R**	13,70
9	**AG0034407R**	168,00
10	**AG0034507R**	6,95
11	**AG0034600R**	161,00

		€
12	**AG0034700R**	8,41
13	**AG0034803R**	7,86
14	**AG0034907R**	28,50
15	**AG0035007R**	89,70
16	**AG0035103R**	53,30

		€
17	**AG0035200R**	46,10
18	**AG0098907R**	19,50
19	**AG0035307R**	156,00
20	**AG0035603R**	27,90
21	**AG0075400R**	33,80

		€
22	**AG0096200R**	7,48

M3-E

Grifería electrónica para lavabo / Basin electronic faucet

DC	**A5A5302**
AC	**A5A5502**

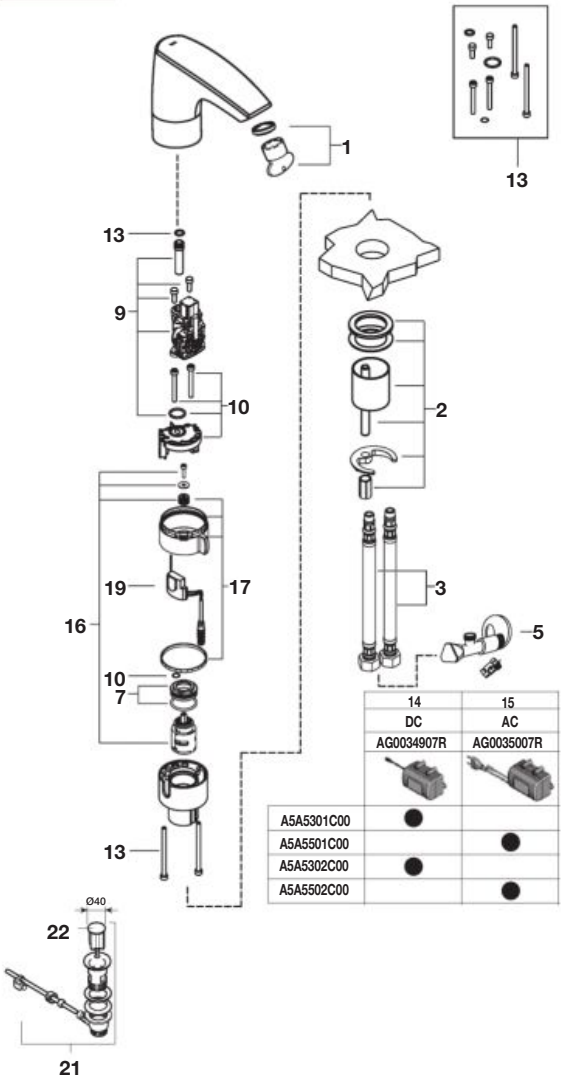

Grifería electrónica para lavabo (un agua) / Basin electronic faucet (one water supply)

DC	**A5A5602**
AC	**A5A5702**

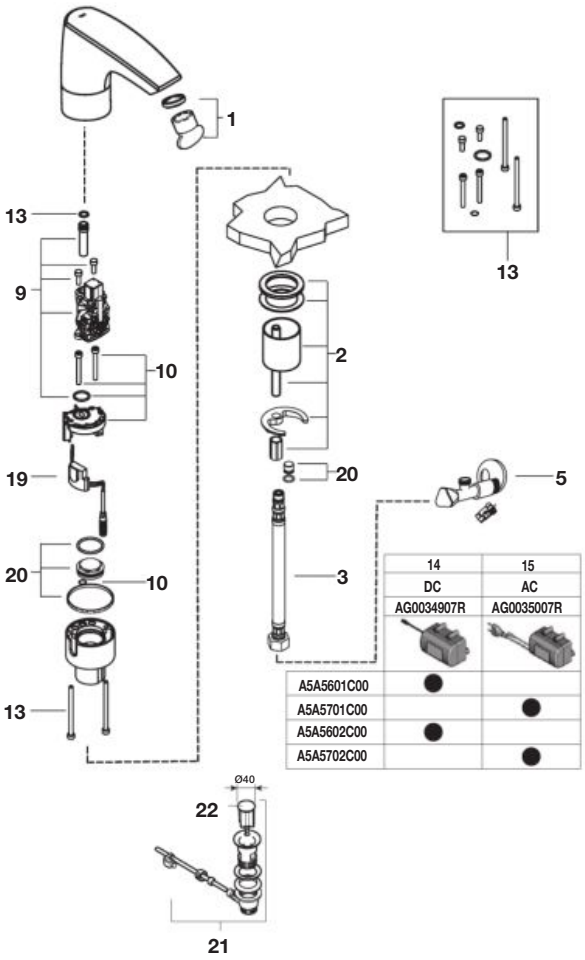

		€
1	**A525003307**	7,92
2	**AG0033903R**	73,50
3	**AG0035509R**	19,90
4	**AG0034003R**	9,12
5	**AG0078200R**	30,90

		€
6	**AG0034103R**	50,00
7	**AG0034203R**	13,70
9	**AG0034407R**	168,00
10	**AG0034507R**	6,95
11	**AG0034600R**	161,00

		€
12	**AG0034700R**	8,41
13	**AG0034803R**	7,86
14	**AG0034907R**	28,50
15	**AG0035007R**	89,70
16	**AG0035103R**	53,30

		€
17	**AG0035200R**	46,10
18	**AG0098907R**	19,50
19	**AG0035307R**	156,00
20	**AG0035603R**	27,90
21	**AG0075400R**	33,80

		€
22	**AG0096200R**	7,48

L70-E

Grifería electrónica para lavabo / Basin electronic faucet

	PRE-MEZCLA / PRE-MIXED	**UN AGUA /** ONE WATER SUPPLY
AC	**A5A5B09..0**	**A5A5D09..0**
DC	**A5A5A09..0**	**A5A5C09..0**

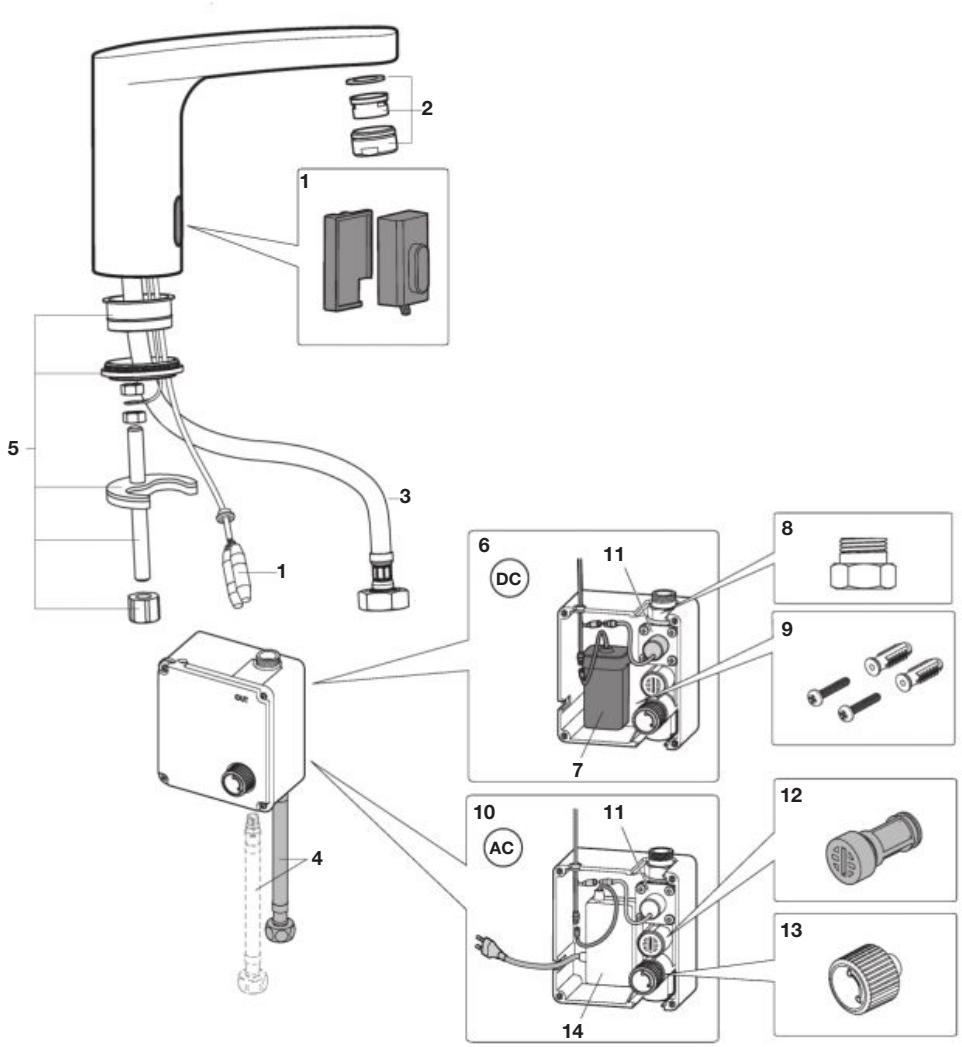

W: Modelos un agua / One water supply models
M: Modelos pre-mezcla / Pre-mixed models

				€
1		**AG0103703R**		73,30
2		**AG0046600R**		11,40
3		**AG0103808R**		2,05
4	2 un	**A525027609**	M10x3/8”	24,20
		AG0092409R	M10x1/2”	8,86
5		**A525030303**		20,80
6		**AG0092807R**	W	185,00
		AG0119107R	M	111,00
7		**AG0089100R**		27,10

				€
8		**AG0093003R**		7,14
9		**AG0092907R**		2,35
10		**AG0093407R**	W	259,00
		AG0119207R	M	162,00
11		**AG0093107R**		117,00
12		**AG0093207R**		12,80
13		**AG0093307R**		7,15
14		**AG0093507R**		87,60

L30-E

Grifería electrónica para lavabo / Basin electronic faucet

A5A5809C00

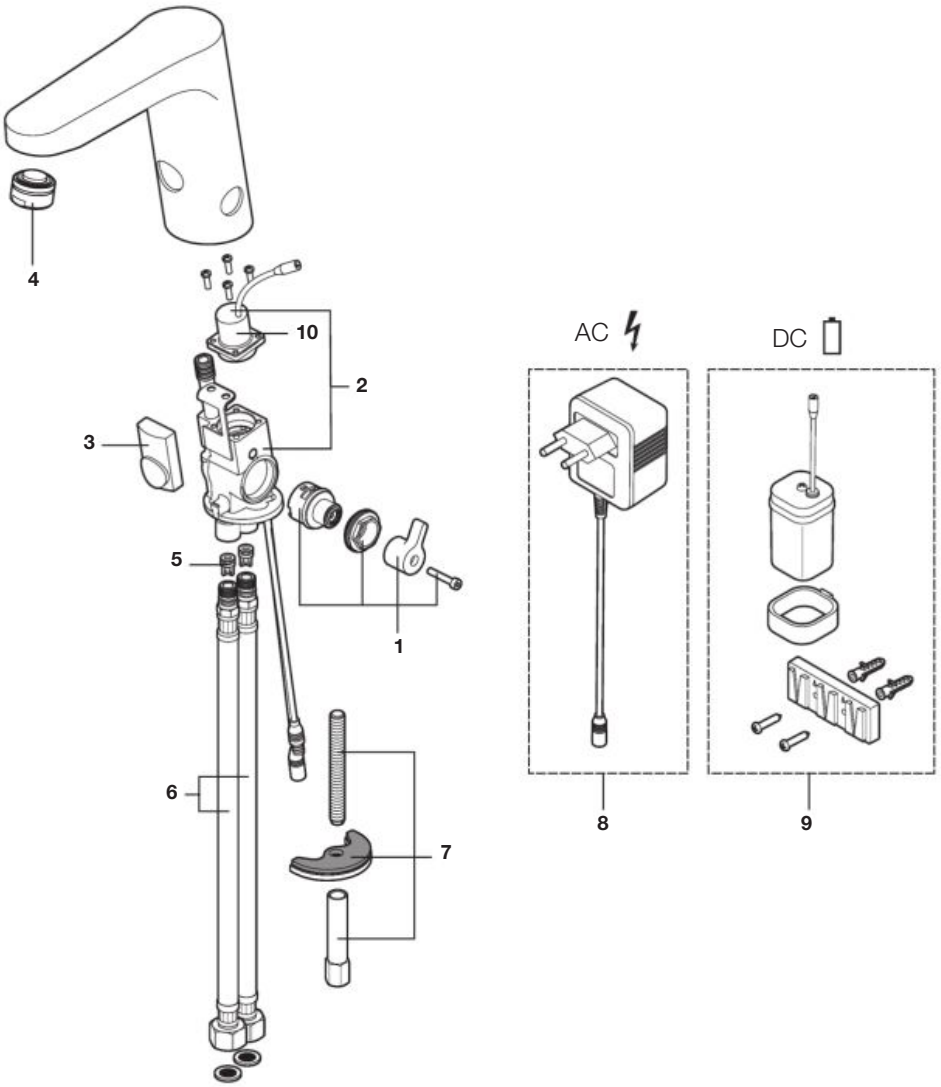

			€
1		**AG0238700R**	17,00
2		**AG0238800R**	48,90
3		**AG0239100R**	85,00
4		**AG0055000R**	9,69
5	2 un	**AG0239000R**	9,33

				€
6		**AG0239300R**		13,80
7		**AG0239400R**		9,03
8		**AG0238900R**	AC	29,90
9		**AG0239200R**	DC	21,70
10		**AG0236300R**		17,10

Atlas-E

Grifería electrónica para lavabo / Basin electronic faucet

	PRE-MEZCLA / PRE-MIXED	**UN AGUA /** ONE WATER SUPPLY
AC	**A5A5590**	**A5A5790**
DC	**A5A5390**	**A5A5690**

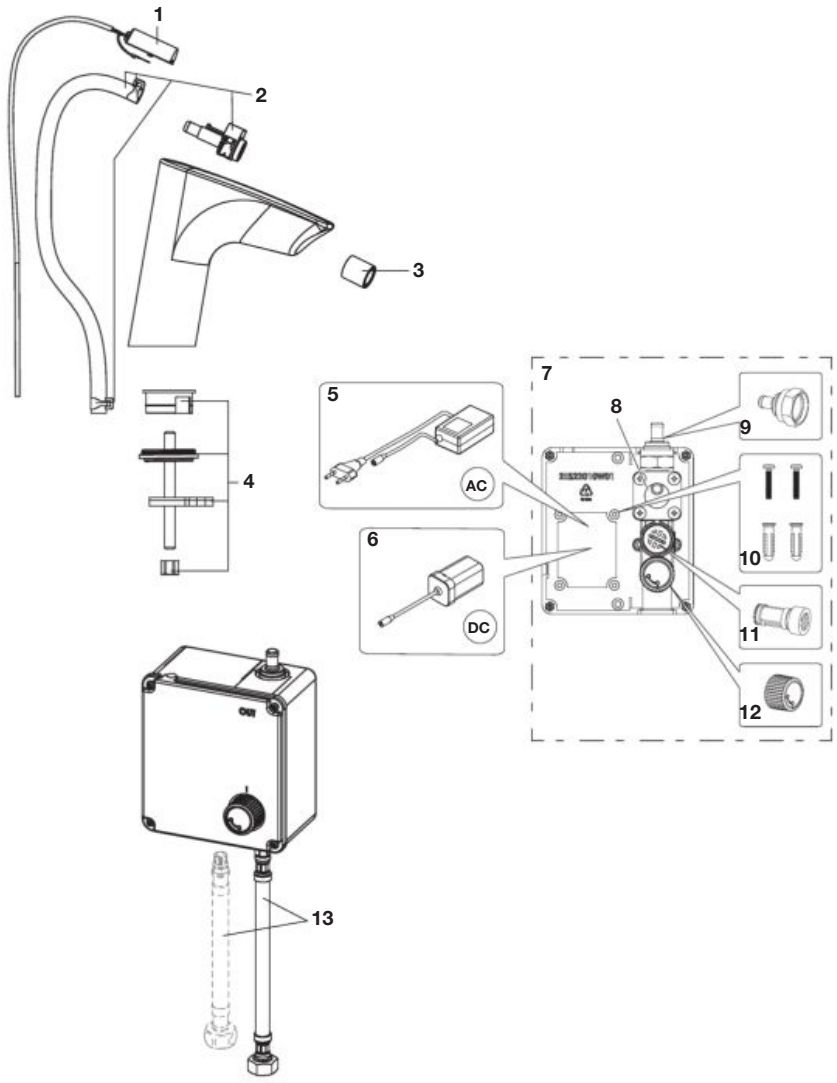

W: Modelos un agua / One water supply models
M: Modelos pre-mezcla / Pre-mixed models

			€
1	**AG0193000R**		155,00
2	**AG0159600R**		9,64
3	**A525009400**		11,30
4	**A525004403**		7,92
5	**AG0093507R**		87,60
6	**AG0089100R**		27,10
7	**AG0105507R**	M DC	174,00
	AG0114907R	W DC	168,00
	AG0105407R	M AC	176,00

		€
8	**AG0093107R**	117,00
9	**AG0105103R**	12,40
10	**AG0092907R**	2,35
11	**AG0093207R**	12,80
12	**AG0093307R**	7,15
13	**A525027609**	24,20

L20-E

Grifería electrónica para lavabo / Basin electronic faucet

	PRE-MEZCLA / PRE-MIXED	**UN AGUA /** ONE WATER SUPPLY
AC ϟ	**A5A5509**	**A5A5709**
DC ▯	**A5A5309**	**A5A5609**

W: Modelos un agua / One water supply models
M: Modelos pre-mezcla / Pre-mixed models

				€
1		**AG0103703R**		73,30
2		**AG0099007R**		12,90
3		**AG0103808R**		2,05
4	2 un	**A525020309**	M10x3/8”	15,00
		AG0092409R	M10x1/2”	8,86
5		**A525030303**		20,80
6		**AG0092807R**	W	185,00
		AG0119107R	M	111,00
7		**AG0089100R**		27,10
8		**AG0093003R**		7,14
9		**AG0092907R**		2,35
10		**AG0093407R**	W	259,00
		AG0119207R	M	162,00
11		**AG0093107R**		117,00
12		**AG0093207R**		12,80
13		**AG0093307R**		7,15
14		**AG0093507R**		87,60
15		**AG0257500R**		-
16		**A525700609**	1/2” x 3/8”	11,40
16		**A289424000**	1/2” x 1/2”	14,20
17		**AG0001503R**		9,17

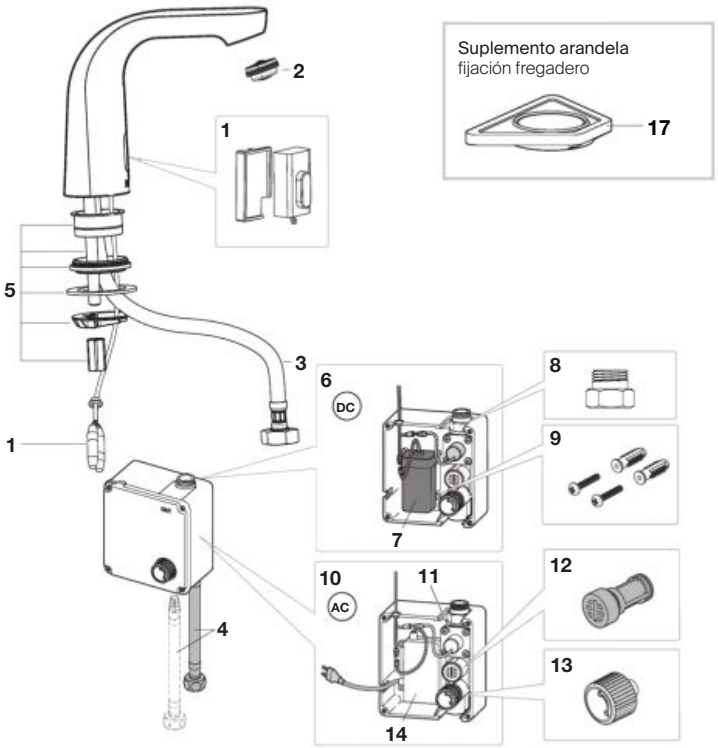

Grifería electrónica para lavabo / Basin electronic faucet

	PRE-MEZCLA / PRE-MIXED	**UN AGUA /** ONE WATER SUPPLY
AC ϟ	**A5C5509**	**A5C5709**

W: Modelos un agua / One water supply models
M: Modelos pre-mezcla / Pre-mixed models

			€
1	**AG0259100R**		111,00
2	**AG0204600R**		2,17
3	**AG0103808R**		2,05
4	**AG0219600R**		11,30
5	**A525030303**		20,80
6	**AG0259200R**		0,70
7	**AG0101207R**		2,35
8	**AG0093507R**		87,60
9	**AG0259300R**		2,97
10	**AG0259400R**	W	317,00
	AG0259500R	M	302,00
11	**AG0092907R**		2,35
12	**AG0259700R**		118,00
13	**AG0259800R**		38,60
14	**AG0259900R**		27,60
15	**AG0260000R**		11,70
16	**AG0260100R**		4,30

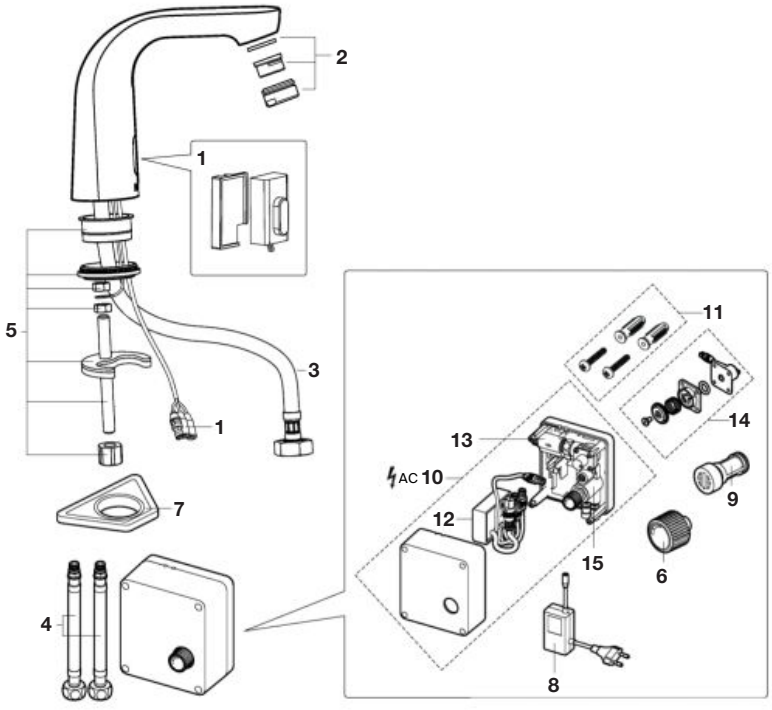

M2-E

Grifería electrónica para lavabo / Basin electronic faucet

	MEZCLA / MIXED	**UN AGUA /** ONE WATER SUPPLY
AC ϟ	**A5A5555C00**	**A5A5755C00**
DC ▯	**A5A5355C00**	**A5A5655C00**

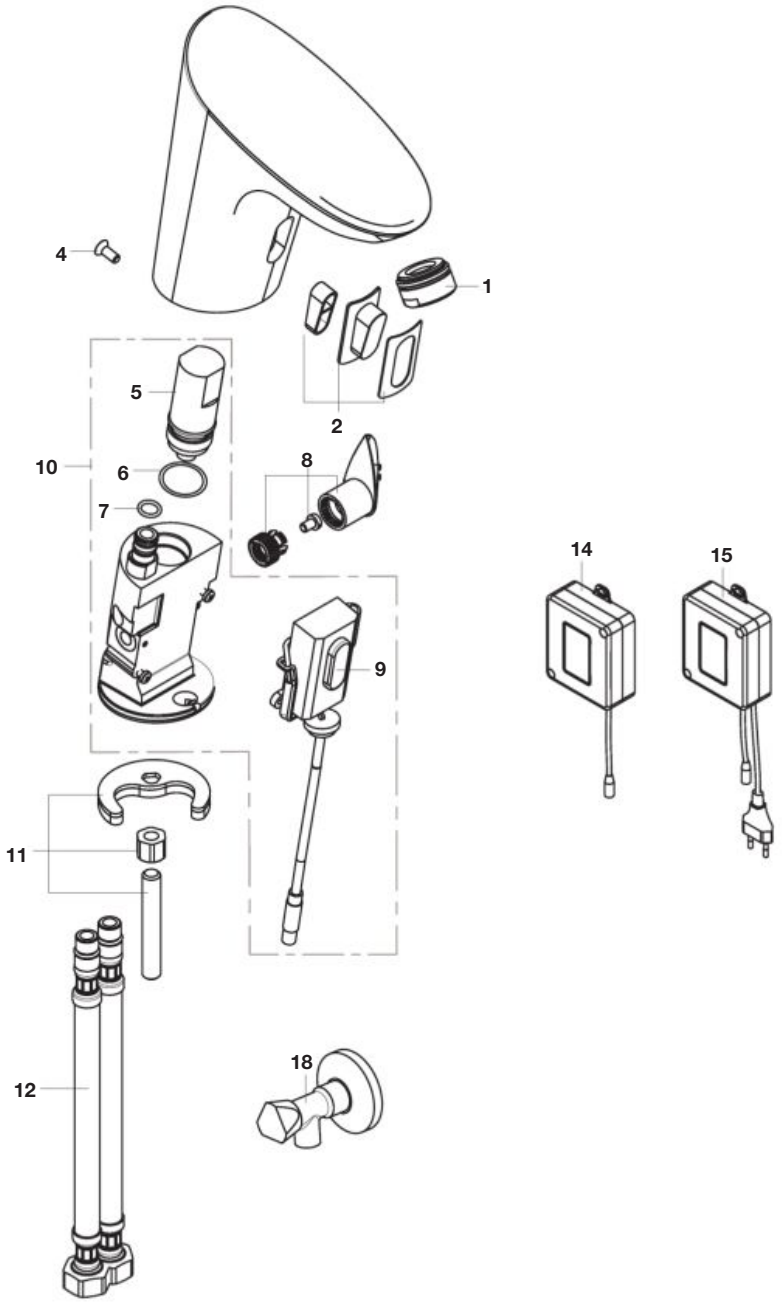

				€
1		**AG0055000R**		9,69
2		**AG0119807R**		6,52
4				
6		**AG0034803R**		7,86
7	2 un			
5		**AG0120603R**		124,00
8		**AG0006200R**		36,70
9		**AG0120707R**		46,40
10		**AG0120503R**		535,00
11		**AG0092503R**		8,86
12	2 un	**A525020309**		15,00
14		**AG0034907R**	DC	28,50
15		**AG0035007R**	AC	89,70
18		**AG0078200R**		30,90

Loft-E

Grifería electrónica mural para lavabo / Wall basin electronic faucet

	PRE-MEZCLA / PRE-MIXED	**UN AGUA /** ONE WATER SUPPLY
AC	**A5A3643C00**	**A5A5743C00**
DC	**A5A3543C00**	**A5A5643C00**

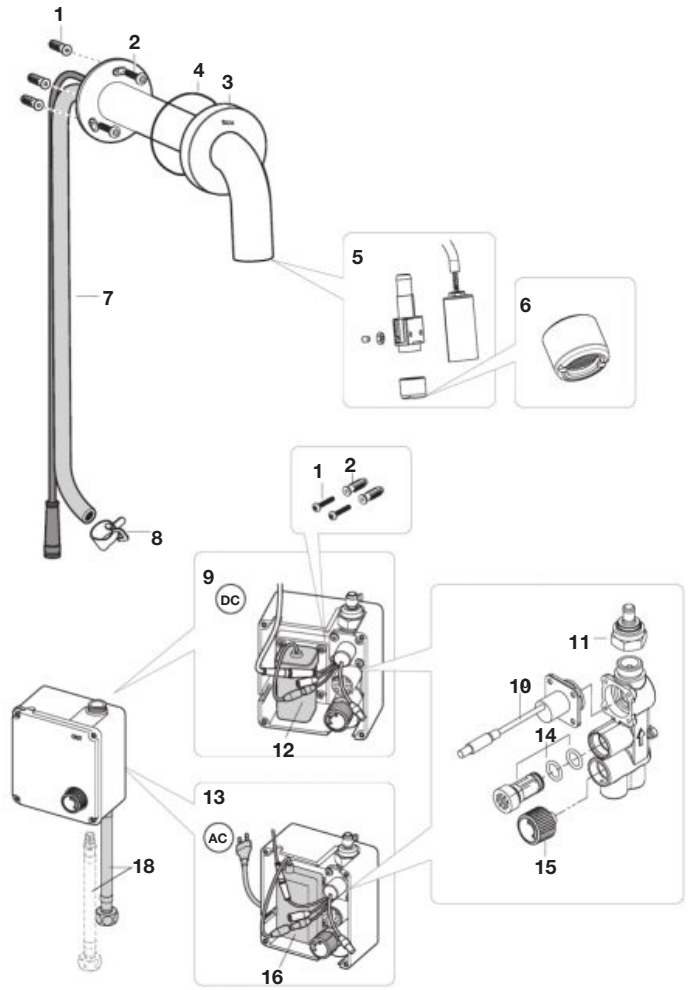

ATENCIÓN: A los recambios específicos por modelo, ver caño.
WARNING: For each specific spare parts, look at the spout.



Grifería electrónica para lavabo / Basin electronic faucet

	PRE-MEZCLA / PRE-MIXED	**UN AGUA /** ONE WATER SUPPLY
AC	**A5A3343C00**	**A5A3943C00**
	A5A3843C00	**A5A4343C00**
DC	**A5A3243C00**	**A5A3143C00**
	A5A3743C00	**A5A4243C00**

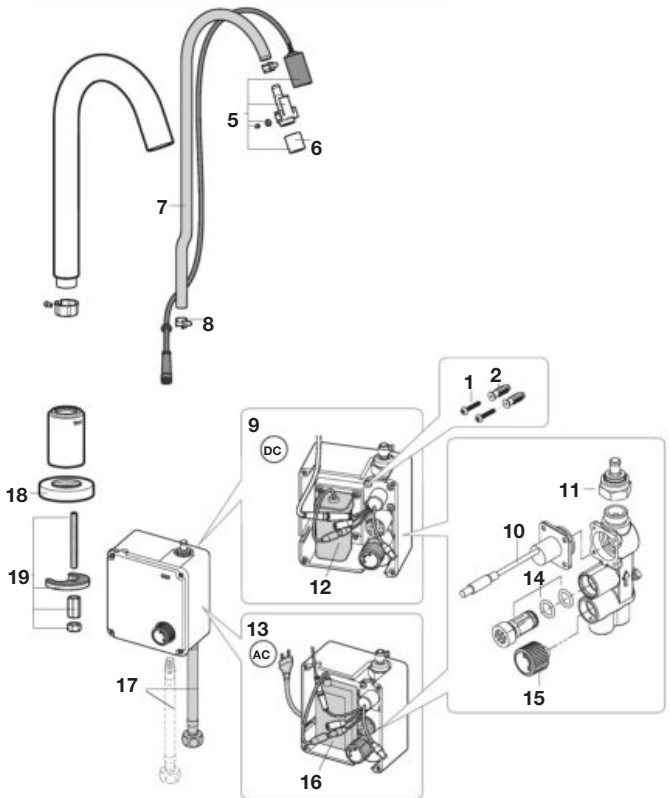

W: Modelos un agua / One water supply models
M: Modelos pre-mezcla / Pre-mixed models

					€
1	2 un	**AG0092907R**			2,35
2	2 un				
3		**AG0114400R**			16,70
4					
5		**AG0148300R**	A		103,00
		AG0145900R	B		113,00
6		**AG0114600R**	A		N.D.
		AG0121800R	B		14,30

					€
7	1,8 m	**AG0159600R**			9,64
8	2 un				
9		**AG0105507R**	M		174,00
		AG0114907R	W		168,00
10		**AG0093107R**			117,00
11		**AG0105103R**			12,40
8					
12		**AG0089100R**			27,10

					€
13		**AG0105407R**	M		176,00
		AG0105207R	W		168,00
14		**AG0093207R**			12,80
15		**AG0093307R**			7,15
16		**AG0093507R**			87,60
17	2 un	**A525027609**			24,20
18		**AG0105300R**			19,90
19		**AG0122503R**			6,32

Loft Connect

Grifería electrónica mural para lavabo /
Wall basin electronic faucet

	UN AGUA / ONE WATER SUPPLY
AC	**A5C5743C00**
DC	**A5C3943C01**
	A5C4343C01

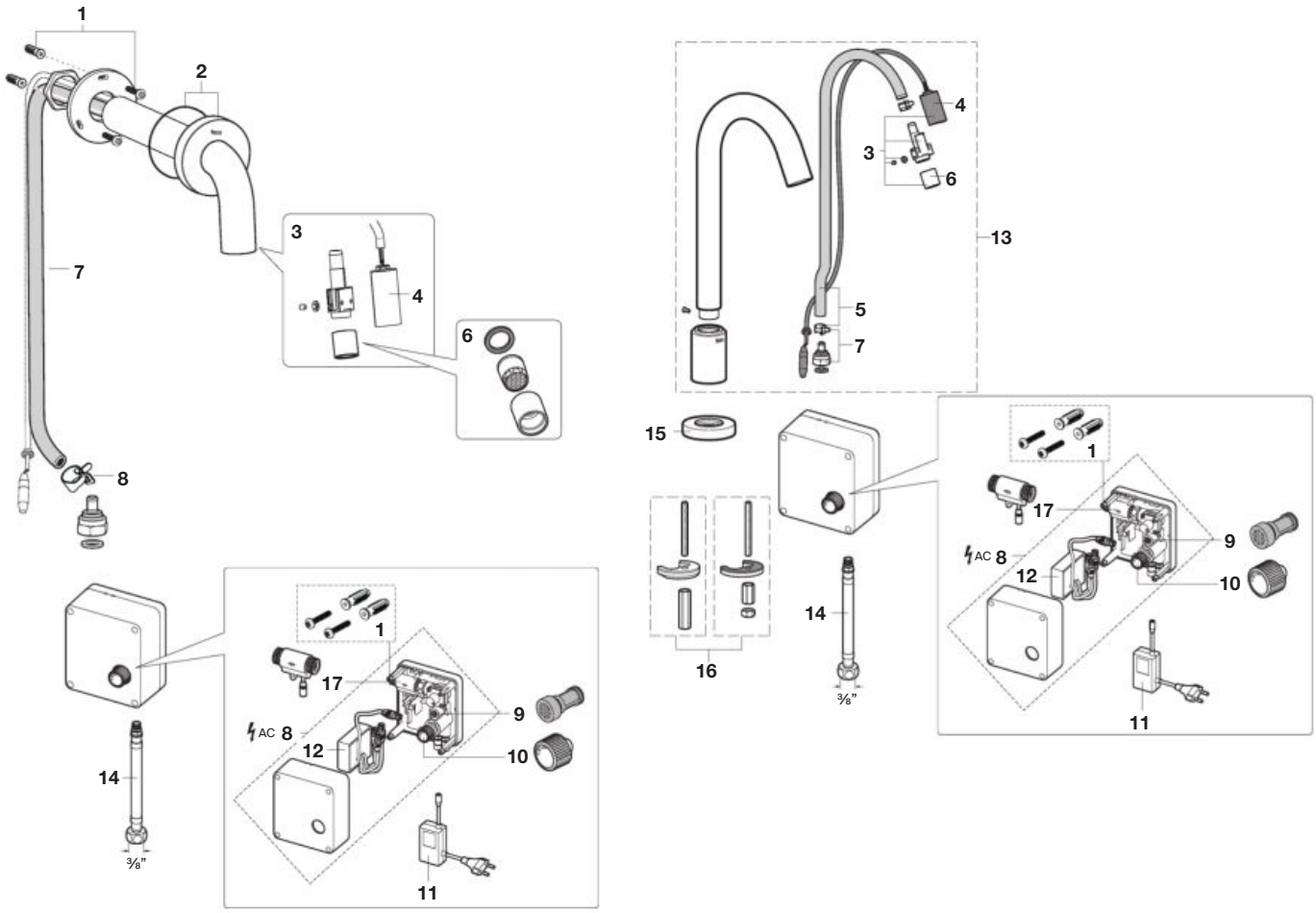

N: Modelos estandard / Standard models
H: Modelos caño alto / High spout models

			€
1	2 un	**AG0092907R**	2,35
2		**AG0114400R**	16,70
3		**AG0270300R**	110,00
4		**AG0148300R**	103,00
5		**AG0159600R**	9,64
6		**AG0265000R**	5,42
7		**AG0264300R**	5,68
8		**AG0270500R**	420,00
9		**AG0093207R**	12,80

				€
10		**AG0093307R**		7,15
11		**AG0093507R**		87,60
12		**AG0270400R**		149,00
13		**AG0122700R**	N	197,00
		AG0122800R	H	208,00
14		**A525020309**	3/8"	15,00
15		**AG0105300R**		19,90
16		**AG0092503R**		8,86
17		**AG0259800R**		38,60

Sentronic-E

Grifería para lavabo / Basin faucet

A5A4602C00

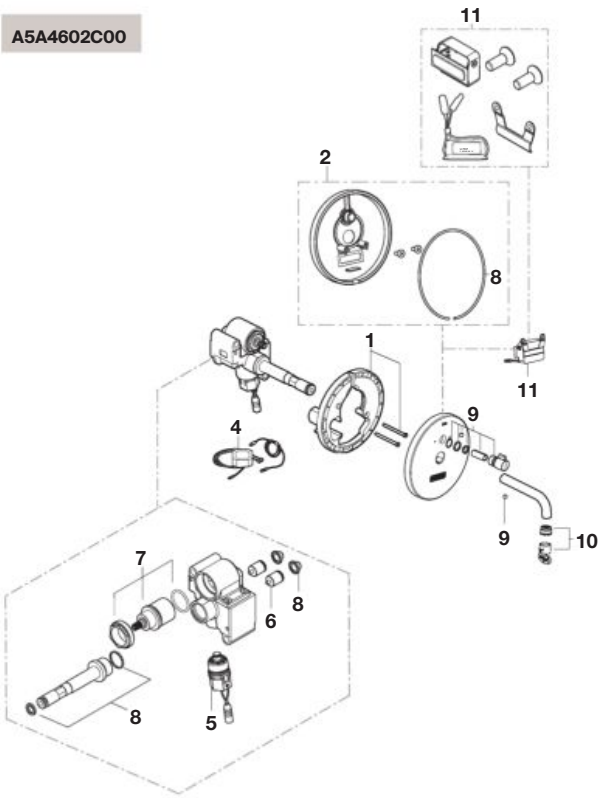

			€
1		**AG0146200R**	20,30
2		**AG0146300R**	224,00
3		**AG0146400R**	108,00
4		**AG0146500R**	224,00
5		**AG0146600R**	179,00
6	2 un	**AG0146700R**	21,40
7		**AG0146800R**	78,50
8		**AG0146900R**	23,80
9		**AG0147100R**	73,80
10		**AG0147300R**	15,10
11		**AG0147200R**	229,00

Grifería mural para lavabo / Wall basin faucet

A5A4702C00

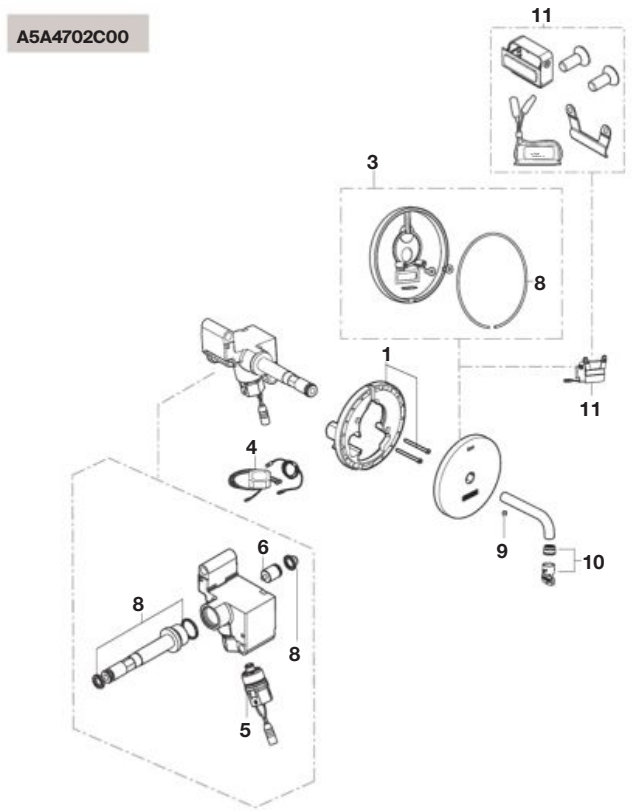

Subconjunto empotrado con llave de corte / Wall-mounted set

A525874603

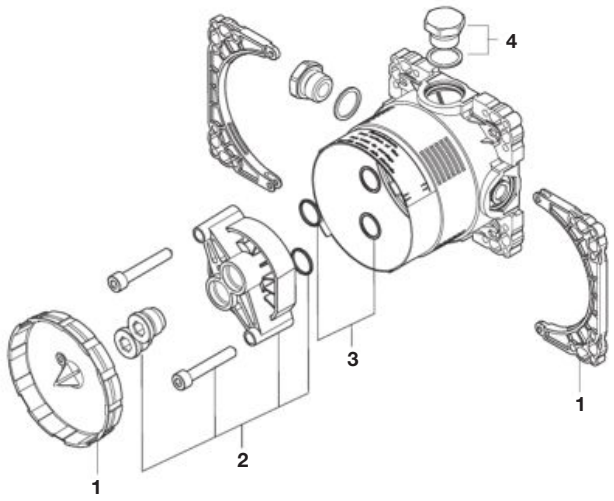

			€
1		**AG0147400R**	25,30
2		**AG0147500R**	54,70
3	2 un	**AG0146900R**	23,80
4		**AG0147700R**	27,40

Sentronic-R

Fluxor electrónico para inodoro / Electronic Fluxor Sentronic-R

A5A9102C00

SENTRONIC- R		
AC	**A5A9802C00**	Cromado / Chromed
	A5A9802CM0	Mate / Matt
	A5A9802B00	Blanco / White
DC	**A5A9702C00**	Cromado / Chromed
	A5A9702CM0	Mate / Matt
	A5A9702B00	Blanco / White

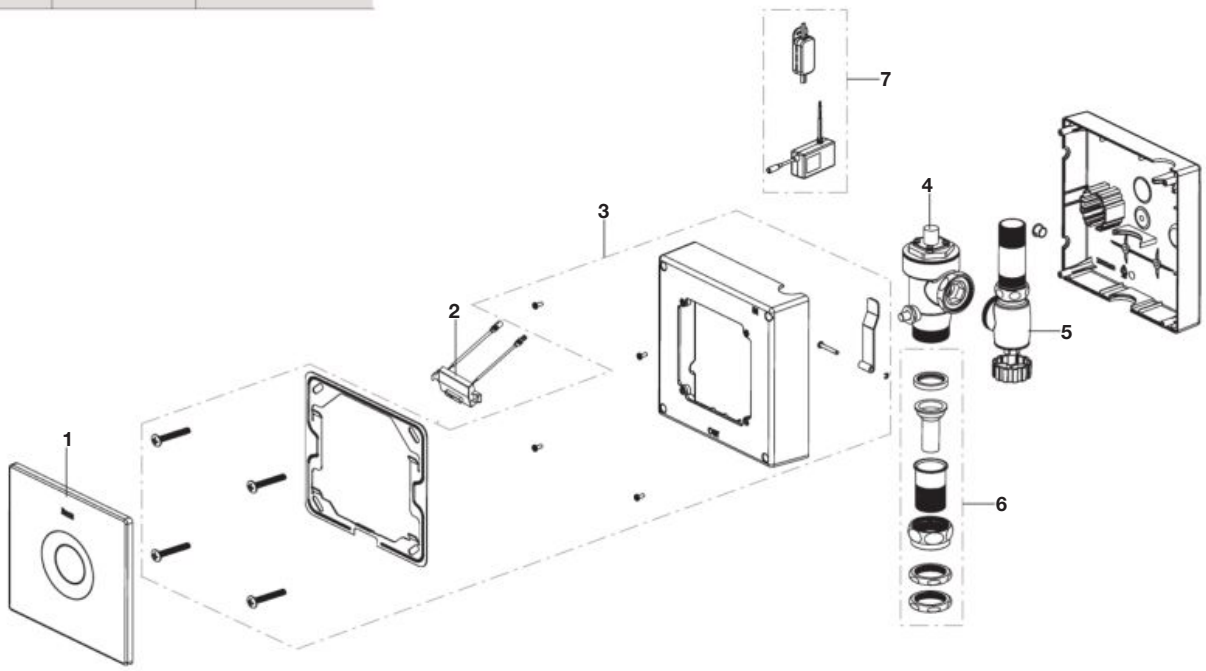

		€
1	**AG0228900R**	82,10
2	**AG0229000R**	59,70
3	**AG0229100R**	35,80
4	**AG0229200R**	291,00
5	**AG0229300R**	114,00
6	**AG0229400R**	86,50
7	**AV0054100R**	46,40

Sentronic-S

Fluxor electrónico para urinario / Electronic Fluxor for urinal

SENTRONIC- S		
AC	**A5A9602C00**	Cromado / Chromed
	A5A9602CM0	Mate / Matt
	A5A9602B00	Blanco / White
DC	**A5A9502C00**	Cromado / Chromed
	A5A9502CM0	Mate / Matt
	A5A9502B00	Blanco / White
Connect IoT	**A5C8102C00**	Cromado / Chromed

Subconjunto exterior placa frontal / Outdoor kit with frontal plate	
A5A8102C00	Cromado / Chromed
A5A8102CM0	Mate / Matt
A5A8102B00	Blanco / White

A completar con: / To complete:

A525165303	Subconjunto empotrado con conexión a red (230) / Wall-mounted kit with online connection (230)
A525165203	Subconjunto empotrado con 4 pilas alcalinas 1,5V LRG(AA) / Wall-mounted kit with 4 alkaline batts 1,5V LRG(AA)

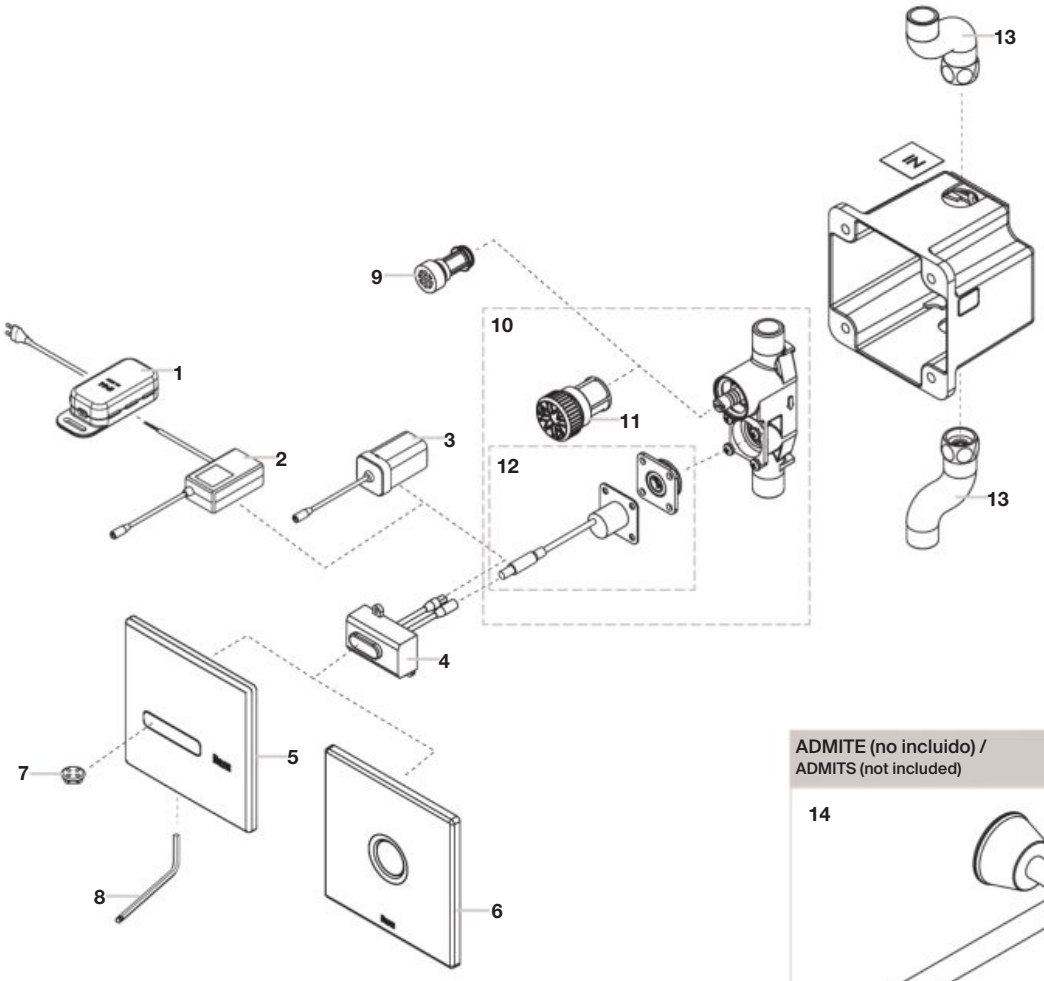

ADMITE (no incluido) /
ADMITS (not included)



			€
1	**AG0103407R**		10,60
2	**AG0093507R**		87,60
3	**AG0089100R**		27,10
4	**AG0103007R**		64,60
5	**AG0103100R**	Cromado / Chromed	58,50
	AG0103121R	Mate / Matt	56,70
	AG010310BR	Blanco / White	48,80
6	**AG0103200R**	Cromado / Chromed	111,00
	AG0103221R	Mate / Matt	97,70
	AG010320BR	Blanco / White	130,00

				€
7	2 un	**AG0103507R**		9,42
8				
9		**AG0102907R**	< 2013	4,74
10		**AG0102703R**		136,00
11		**AG0102803R**		7,94
12		**AG0093107R**		117,00
13	2 un	**AG0103303R**		37,70

Producto acabado compatible:
Finished product compatible

		€
14	**A525560500**	-

Sentronic-S Connect

Fluxor electrónico para urinario / Electronic Fluxor for urinal

SENTRONIC- S		
AC	**A5A9602C00**	Cromado / Chromed
	A5A9602CM0	Mate / Matt
	A5A9602B00	Blanco / White
DC	**A5A9502C00**	Cromado / Chromed
	A5A9502CM0	Mate / Matt
	A5A9502B00	Blanco / White
Connect IoT	**A5C8102C00**	Cromado / Chromed

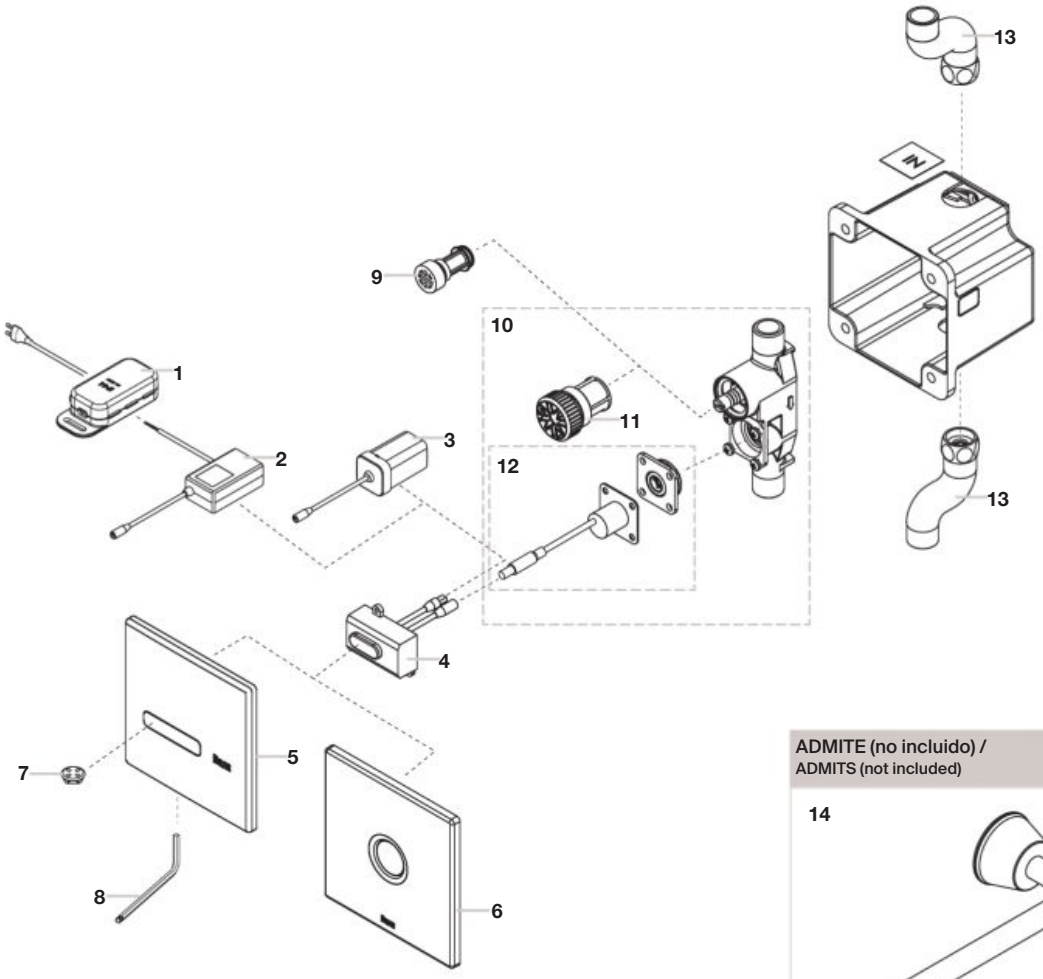

ADMITE (no incluido) /
ADMITS (not included)

			€
1	**AG0103407R**		10,60
2	**AG0093507R**		87,60
3	**AG0089100R**		27,10
4	**AG0103007R**		64,60
	AG0261100R	Connect IoT	-
5	**AG0103100R**	Cromado / Chromed	58,50
	AG01031CMR	Mate / Matt	-
	AG01031B0R	Blanco / White	-
6	**AG0103200R**	Cromado / Chromed	111,00
	AG01032CMR	Mate / Matt	-
	AG010320BR	Blanco / White	130,00

				€
7	2 un	**AG0103507R**		9,42
8				
9		**AG0102907R**	< abril 2013	4,74
10		**AG0102703R**		136,00
11		**AG0102803R**		7,94
12		**AG0093107R**		117,00
13	2 un	**AG0103303R**		37,70

Producto acabado compatible:
Finished product compatible

		€
14	**A525560500**	-

Sentronic-V

Fluxor electrónico visto de urinario / Electronic Fluxor for urinal

A5A9A79C00

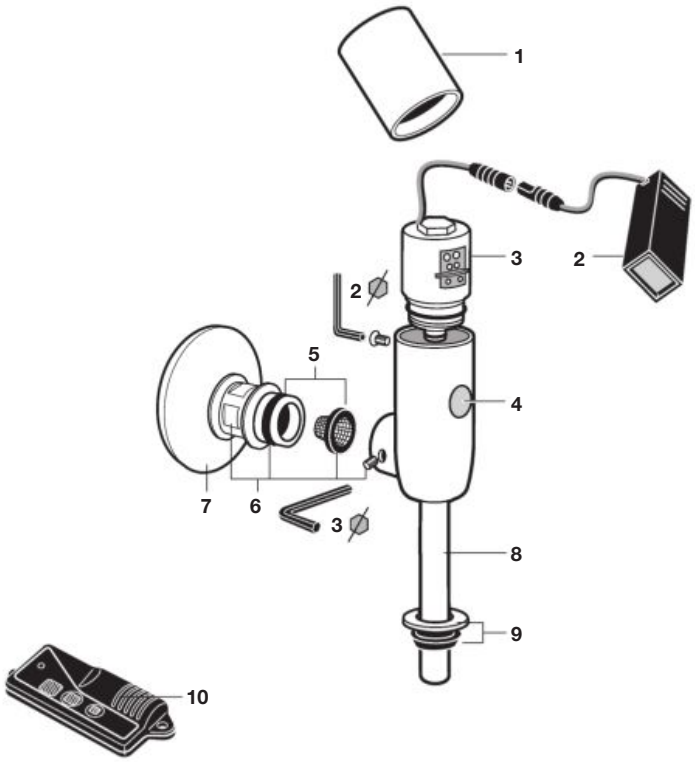

		€
1	**AG0175900R**	93,80
2	**AG0072407R**	69,20
3	**AG0072003R**	502,00
4	**AG0072607R**	16,10
5	**AG0072703R**	13,20
6	**AG0072103R**	26,50
7	**AG0072200R**	10,00
8	**AG0072500R**	28,90
9	**AG0072800R**	16,80
10	**A525081207**	87,90

Vortex

Fluxor electrónico para urinario / Electronic Fluxor for urinal

A526901310

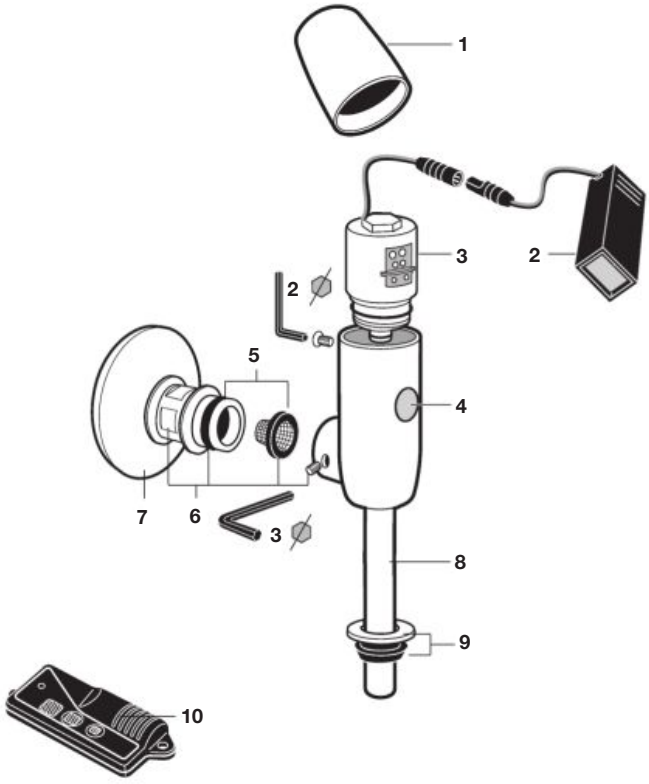

		€
1	**AG0072300R**	63,90
2	**AG0072407R**	69,20
3	**AG0072003R**	502,00
4	**AG0072607R**	16,10
5	**AG0072703R**	13,20
6	**AG0072103R**	26,50
7	**AG0072200R**	10,00
8	**AG0072500R**	28,90
9	**AG0072800R**	16,80
10	**A525081207**	87,90

Moai-E

Grifería electrónica para lavabo / Basin electronic faucet

	PRE-MEZCLA / PRE-MIXED	**UN AGUA /** ONE WATER SUPPLY
AC	**A5A5746**	**A5A5546**
DC	**A5A5646**	**A5A5346**

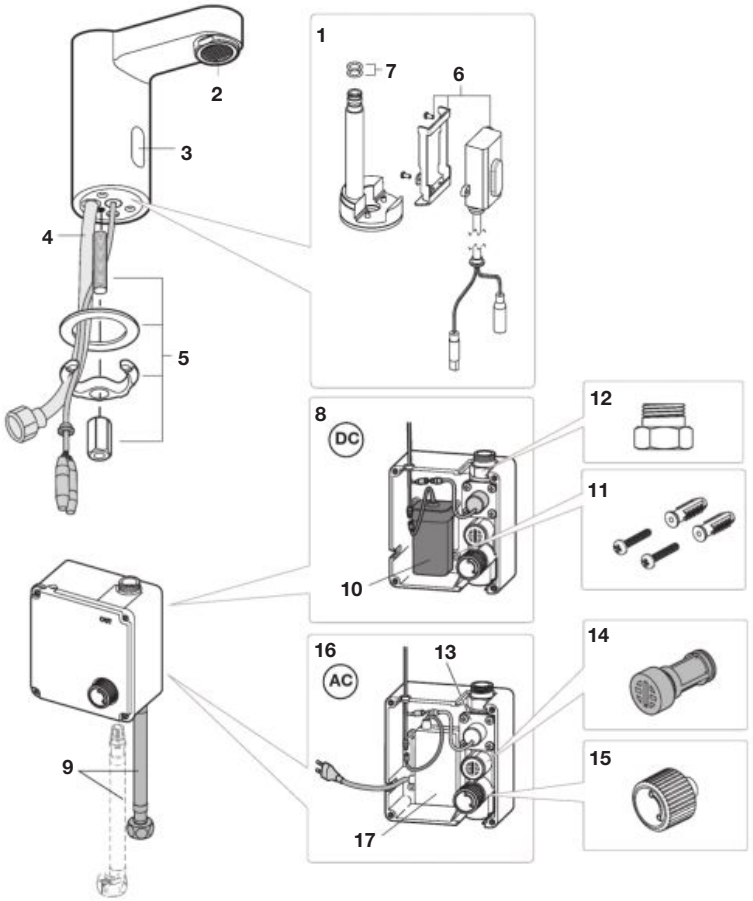

W: Modelos un agua / One water supply models
M: Modelos pre-mezcla / Pre-mixed models

				€
1		**AG0092103R**		115,00
2		**AG0092200R**		14,00
3		**AG0092307R**		6,11
4		**AG0092409R**		8,86
5		**AG0092503R**		8,86
6		**AG0092603R**		65,50
7		**AG0092707R**		1,77
8		**AG0092807R**	W	185,00
		AG0119107R	M	111,00
9	2 un	**A525020309**	M10x3/8"	15,00
		AG0092409R	M10x1/2"	8,86
10		**AG0089100R**		27,10
11		**AG0092907R**		2,35
12		**AG0093003R**		7,14
13		**AG0093107R**		117,00
14		**AG0093207R**		12,80
15		**AG0093307R**		7,15
16		**AG0093407R**	W	259,00
		AG0119207R	M	162,00
17		**AG0093507R**		87,60

Otras series de griferías electrónicas / Other electronic faucets

Sanicontrol



Fuente de alimentación / Portapilas
Power supply / Battery holder

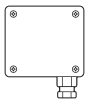

		€
A525093407	Fuente de alimentación red 230 V Cntrl box t/s electronic tap	204,00
A525940307	Caja portapilas Battery box for veranda/amur	36,00

Sanicontrol



Tapón antivandálico para griferías electrónicas
Electronic faucets anti-vandal cap



		€
A522341600	Tapón antivandálico Vandal resistant handle	13,60

Mezclador electrónico para lavabo Amura /
Amura basin electronic mixer

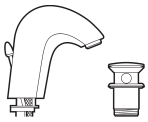

		€
A505115103	Electrovalvula 630 / Solenoid 630	303,00
A505116103	Electrovalvula 622 / Solenoid 622	360,00
A505117103	Electrovalvula 591 / Solenoid 591	500,00
A505906103	Reflector r-580 grif electr Reflector r-580 electronic faucet	104,00
A522417003	Eje regulador amura / Adjustment stem amura	4,88
A525081207	Mando a dist fluxor vortex Remote control flush valve vortex	87,90
A525093407	Rec.Fuente alim el. Red veranda-emura e Cntrl box t/s electronic tap	204,00
A525094000	Recambio alargo mezcl electr Kit extension electronic mixer	25,10
A525833921	Roseton-codo-visor cr Visor to suit veranda dome	34,70
A525846600	Roseton c/junta / Wall plate with seal	8,95
A525940307	Caja pilas grif. Elect.Veranda/amura-e Battery box for veranda/amur	36,00

Mezclador electrónico para lavabo Amura /
Amura basin electronic mixer

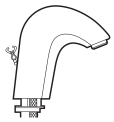

		€
A525940403	Electrovalvula grif.El.Veranda/amura e Transformer amura-n elec	264,00
A525940807	Emisor-receptor veranda Ir sensor for veranda dome	85,90
A525941707	Emisor-receptor grifo electr Sensor for amura electronic	180,00
A525941807	Emisor-recep det corta amura elec. Emisor-recep det corta amura elec.	180,00
A526804400	Compl.Mezclador cabezal cro Mixer head accessory chrome	151,00
AG0006200R	Kit maneta mezcl amura elec Kit mixer handle amura elec	36,70
AG0068607R	Kit anillo tórico eje electron.(5U.) Kit o-ring electronic axis (5u.)	9,43
AG0106103R	Kit transf 220v grif electr urin Urinal electr fittings 220v transf kit	400,00
AG0106103R	Kit transf 220v grif electr urin Urinal electr fittings 220v transf kit	400,00

Instant

Grifería de repisa para lavabo
Deck mounted basin faucet

A5A3177C00
A5A3377C00 Q = 2L (ECO)

A5A4277C00
A5A4477C00 Q = 2L (ECO)
A5A4577C00

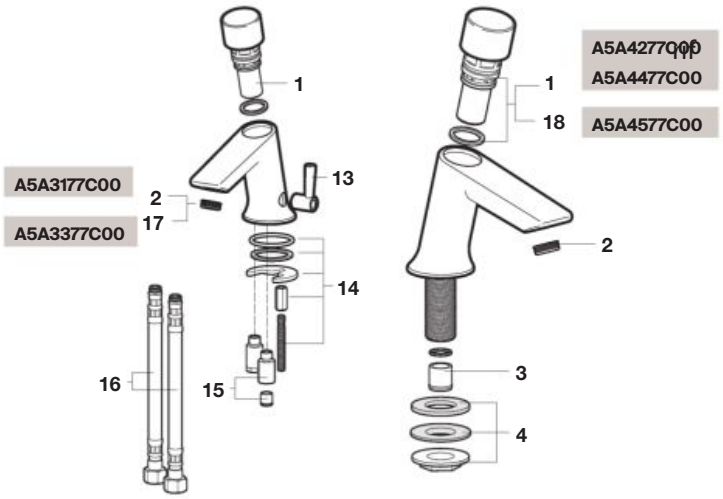

Grifería de pared para lavabo
Wall basin faucet

A5A7877C00 Q=6L

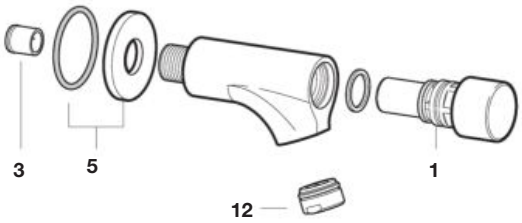

Grifería para ducha / Shower faucet

A5A2677C00

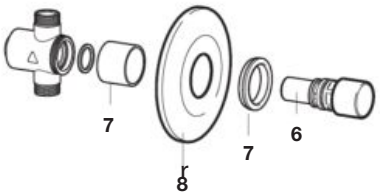

Grifería para ducha / Shower faucet

A5A2777C00

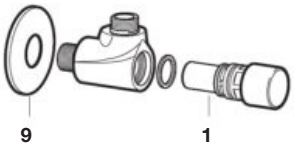

Grifería para urinario / Urinal faucet

A5A9077C00

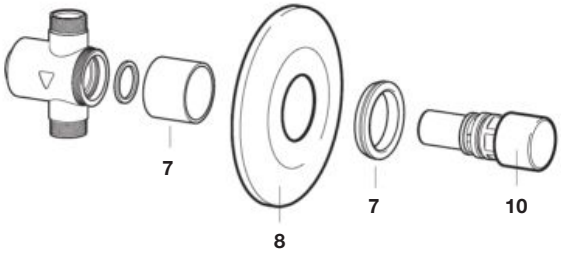

Grifería para urinario / Urinal faucet

A5A9277C00

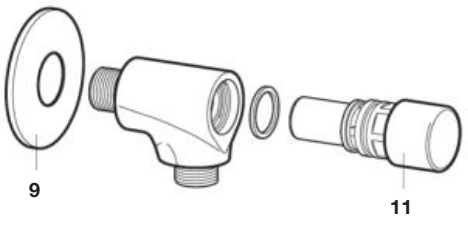

			€
1	AG0101300R		57,90
2	A5250032O7		5,74
3	AG0104500R	6 l/min	9,50
	AG0104700R	2 l/min	30,00
4	AG0101600R		14,40
5	AG0101700R		14,40
6	AG0101800R		52,90

		€
7	AG0101900R	21,10
8	AG0102000R	51,20
9	AG0102100R	30,10
10	AG0102200R	30,90
11	AG0102300R	65,30
12	AG0102940R	2,74
13	AG0113700R	4,60

		€
14	AG0113600R	11,40
15	AG0114200R	70,50
16	AG0114300R	17,60
17	AG0114400R	20,60
18	AG0195300R	88,50

Instant Care

Grifería temporizada para lavabo / Basin self-closing faucet

A5A3277C00

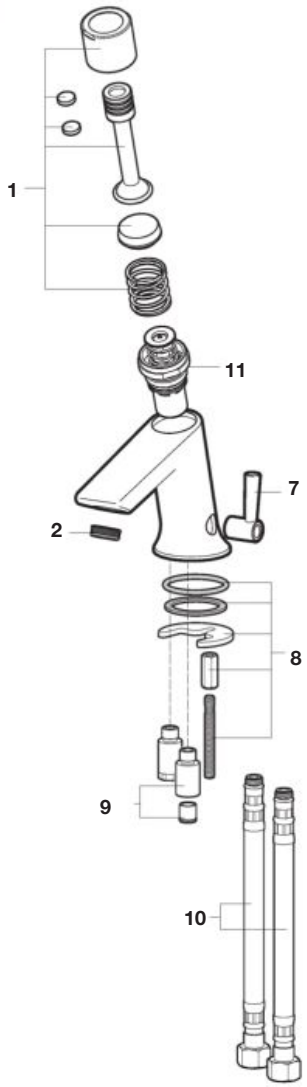

Grifería temporizada para lavabo / Basin self-closing faucet

A5A4377C00

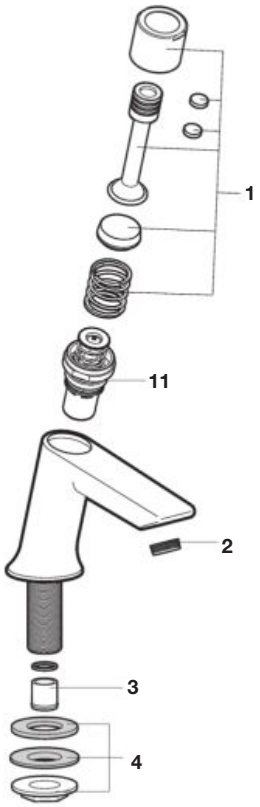

Grifería temporizada de pared para lavabo / Wall basin self-closing basin

A5A7977C00

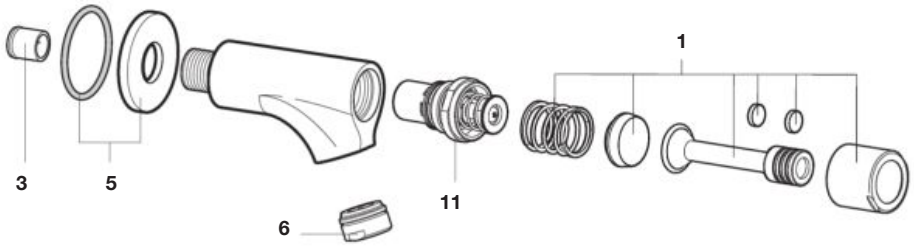

		€
1	**AG0126500R**	99,70
2	**A525003207**	5,74
3	**AG0101507R**	9,58

		€
4	**AG0101603R**	14,40
5	**AG0101700R**	14,40
6	**AG0029400R**	2,74

		€
7	**AG0113700R**	44,60
8	**AG0113600R**	11,40
9	**AG0113500R**	70,50

		€
10	**A525008009**	17,60
11	**AG0126607R**	133,00

Instant Foot

Grifo de pedal un agua / Foot operated faucet one water supply

A505127800

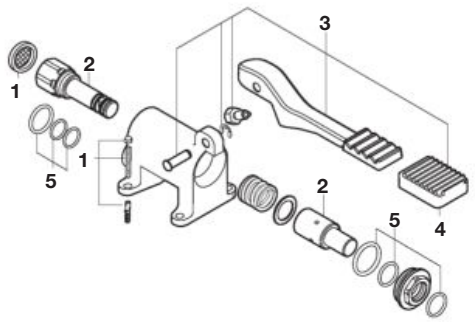

Grifo de pedal un agua / Foot operated faucet one water supply

A505127900

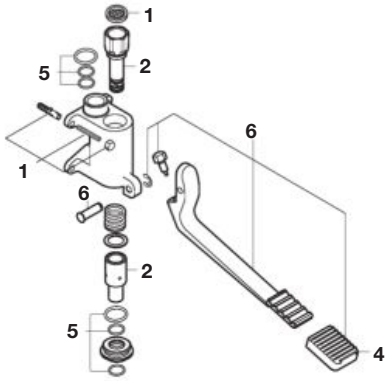

Mezclador de pedal / Foot operated mixer

A505128600

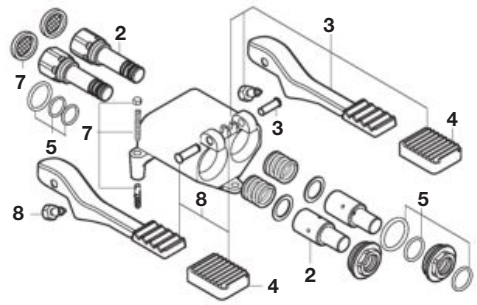

Mezclador de pedal / Foot operated mixer

A505128700

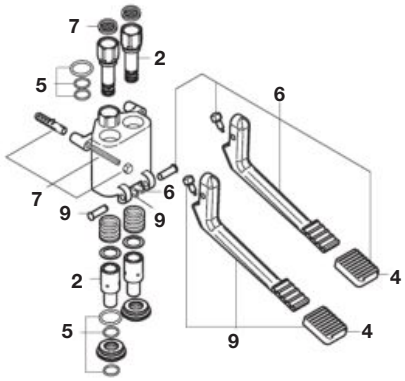

Mezclador progresivo de pedal / Progressive foot operated mixer

A505128800

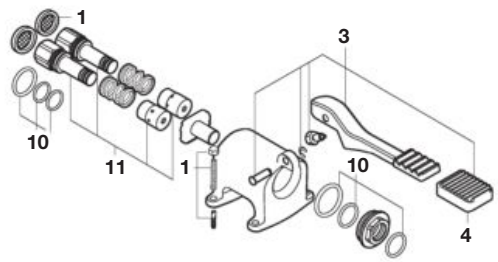

Mezclador progresivo de pedal / Progressive foot operated mixer

A505128900

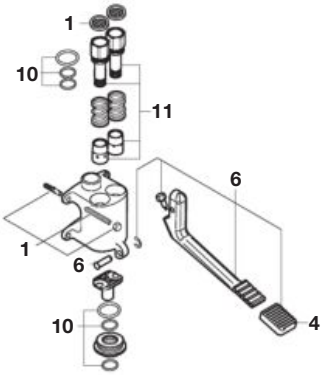

H- Caliente / Hot
C- Frio / Cold

			€
1	**AG0150800R**		11,30
2	**AG0150100R**	C	53,30
3	**AG0150200R**		55,20
4	**AG0150400R**		19,40

			€
5	**AG0150900R**		72,70
6	**AG0150600R**	C	102,00
7	**AG0151100R**		10,10
8	**AG0150300R**	H	55,20

			€
9	**AG0150700R**	H	102,00
10	**AG0151000R**		102,00
11	**AG0150500R**		64,40

Instant Pro

Mezclador para caño espiral industrial 1200 mm / Industrial spout mixer 1200 mm

A5A8064C00

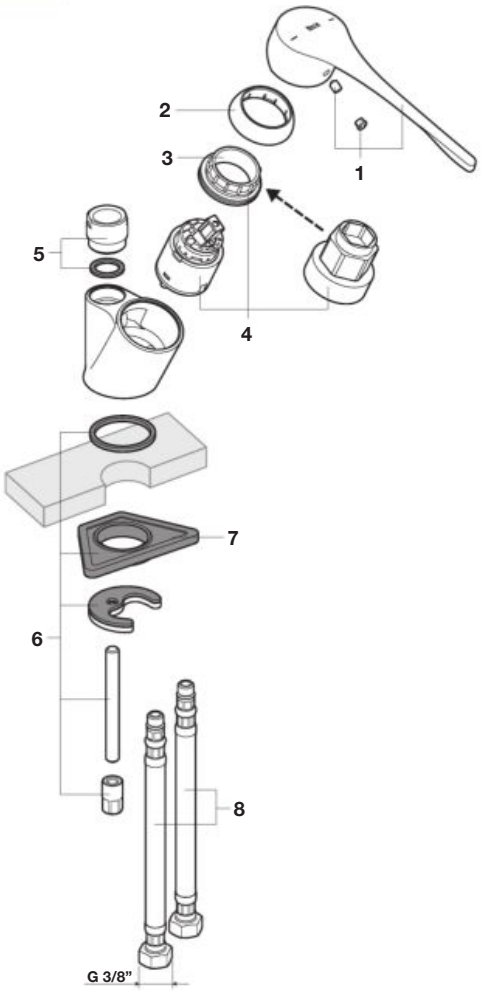

Caño espiral industrial 1200 mm / Industrial spout 1200 mm

A5A8564C00	1 salida / 1 outlet
A5A8664C00	2 salidas / 2 outlet

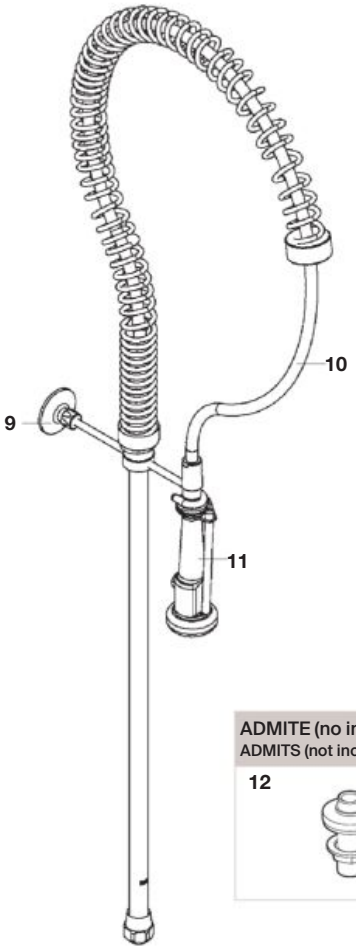

ADMITE (no incluido) / ADMITS (not included)

12

		€
1	**A525003000**	36,40
2	**AG0085300R**	18,00
3	**A525023507**	4,23
4	**AG0077807R**	42,10
5	**AG0165100R**	13,40
6	**A525006903**	8,56

		€
7	**AG0101207R**	2,35
8	**A525020309**	15,00
9	**AG0165200R**	74,70
10	**AG0165300R**	63,80
11	**AG0165500R**	332,00

Producto acabado compatible:
Compatible finished product:

		€
12	**A5A8764C00**	-

Fluent

Grifería para lavabo / Basin faucet

A5A3A24..0
A5A3B24..0

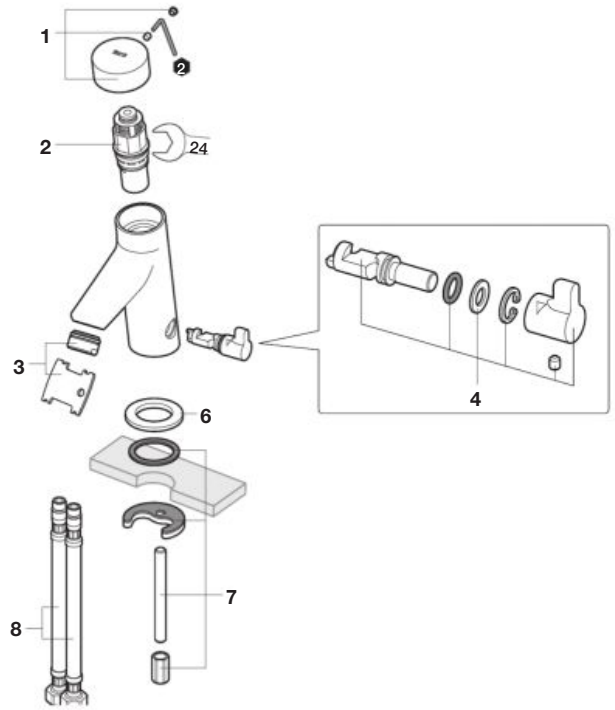

Grifería para lavabo / Basin faucet

A5A4A24..0
A5A4B24..0

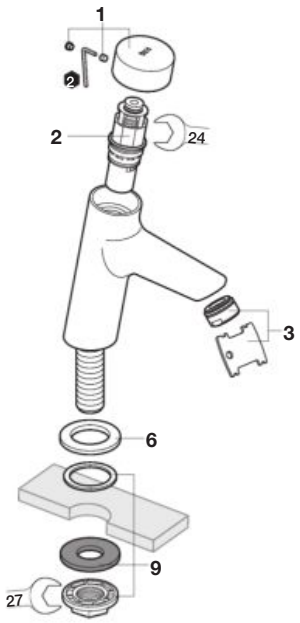

Grifería para lavabo / Basin faucet

A5A7A24..0

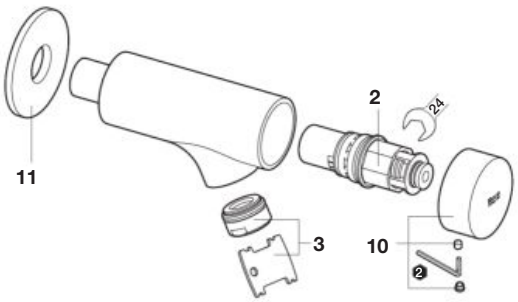

Grifería para urinario / Urinal faucet

A5A9A24..0
A5A9C24..0

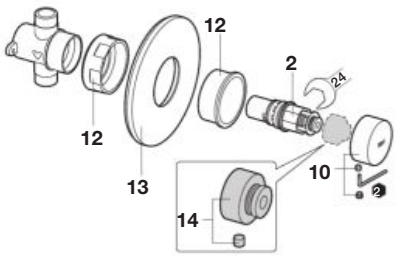

A5A9B24..0
A5A9D24..0

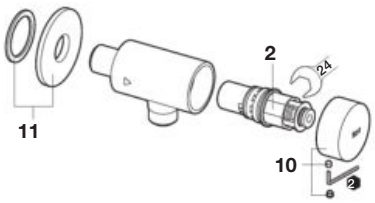

			€
1	**AG0196700R**		9,73
2	**AG0197400R**		18,60
3	**AG0198500R**	5l/min	23,50
	AG0198600R	2l/min	24,20

		€
4	**AG0196900R**	31,20
6	**AG0197100R**	6,59
7	**AG0197000R**	12,70
8	**AG0061409R**	31,90

		€
9	**AG0171900R**	7,70
10	**AG0197200R**	9,73
11	**AG0197300R**	18,30
12	**AG0197800R**	38,30

		€
13	**AG0197700R**	37,90
14	**AG0197900R**	10,00

Sprint-N

Grifería temporizada para lavabo / Basin self-closing faucet

A5A3124C00

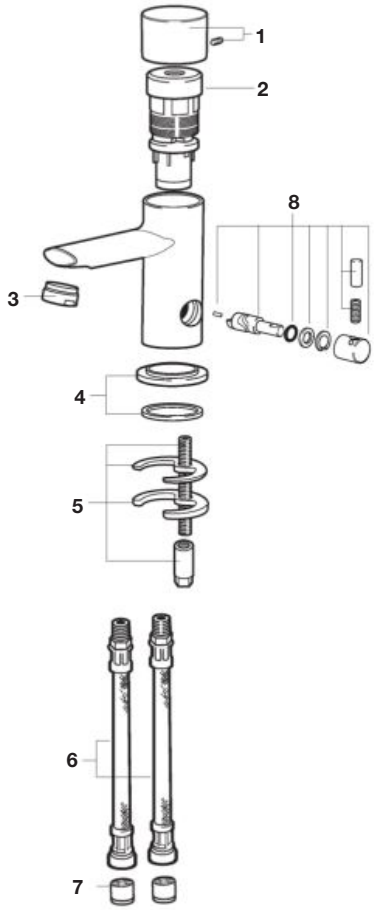

Grifería temporizada para lavabo / Basin self-closing faucet

A5A4224C00

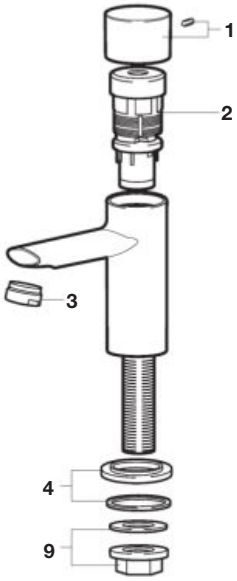

A5A7824C00

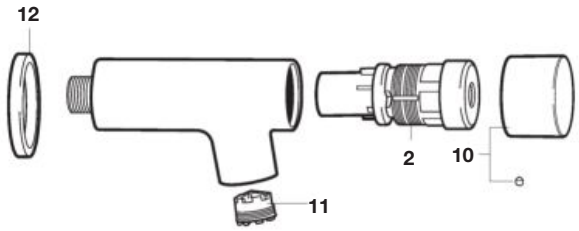

Grifería temporizada angular para ducha / Shower self-closing faucet

A5A2724C00

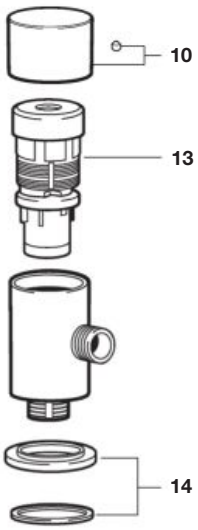

Grifería temporizada empotrable para ducha / Shower wall-mounted self-closing faucet

A5A2624C00

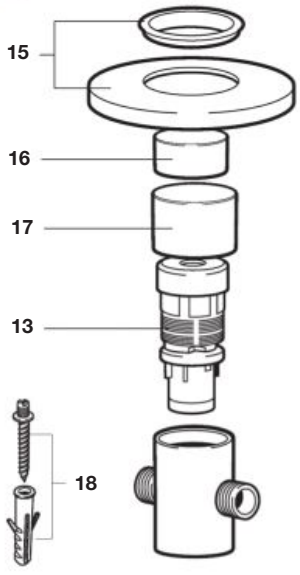

		€
1	**AG0069600R**	31,50
2	**AG0069703R**	39,20
3	**A525002900**	9,08
4	**AG0069900R**	20,50

		€
5	**AG0069803R**	11,90
6	**AG0070109R**	21,50
7	**AG0070207R**	7,62
8	**AG0070000R**	22,00

		€
9	**AG0070307R**	1,30
10	**AG0071100R**	47,60
11	**A525003907**	22,70
12	**AG0070400R**	18,80

		€
13	**AG0070503R**	32,10
14	**AG0070600R**	18,20
15	**AG0070900R**	16,40
16	**AG0070700R**	18,50

		€
17	**AG0070800R**	19,40
18	**AG0071003R**	3,24

Sprint-N

Grifería temporizada para urinario / Urinal self-closing faucet

A5A9124C00

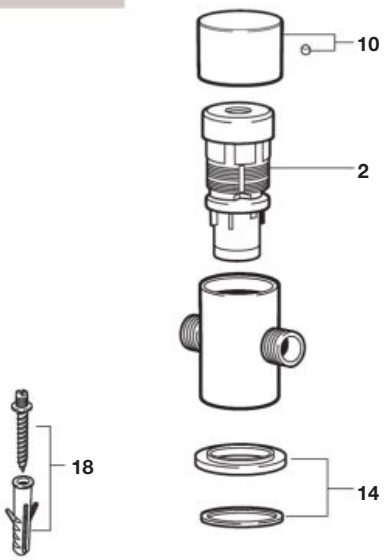

Grifería temporizada angular para urinario / Urinal angular self-closing faucet

A5A9224C00



Grifería temporizada empotrable para urinario / Urinal wall-mounted self-closing faucet

A5A9024C00

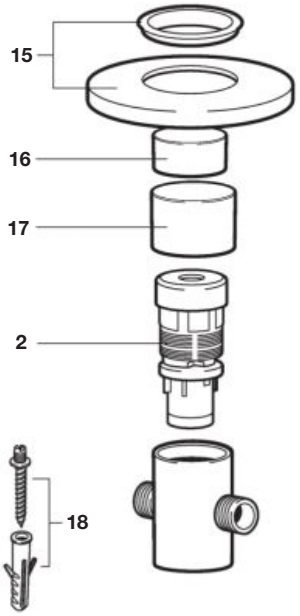

		€
1	**AG0069600R**	31,50
2	**AG0069703R**	39,20
3	**A525002900**	9,08
4	**AG0069900R**	20,50

		€
5	**AG0069803R**	11,90
6	**AG0070109R**	21,50
7	**AG0070207R**	7,62
8	**AG0070000R**	22,00

		€
9	**AG0070307R**	1,30
10	**AG0071100R**	47,60
11	**A525003907**	22,70
12	**AG0070400R**	18,80

		€
13	**AG0070503R**	32,10
14	**AG0070600R**	18,20
15	**AG0070900R**	16,40
16	**AG0070700R**	18,50

		€
17	**AG0070800R**	19,40
18	**AG0071003R**	3,24

Sprint

Grifería temporizada para ducha / Shower self-closing faucet

A5A2517C00

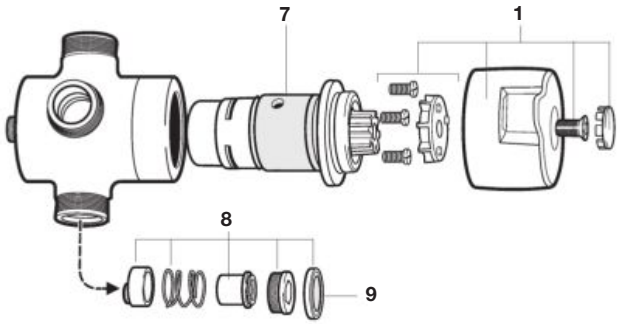

A5A2117C00

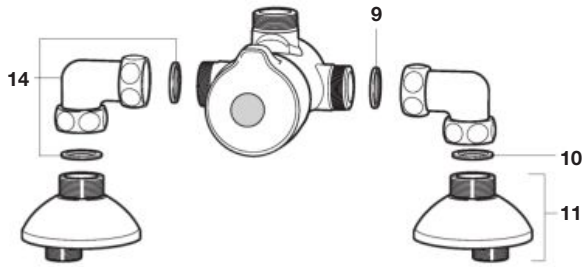

Grifería temporizada para lavabo / Basin self-closing faucet

A5A3217C00

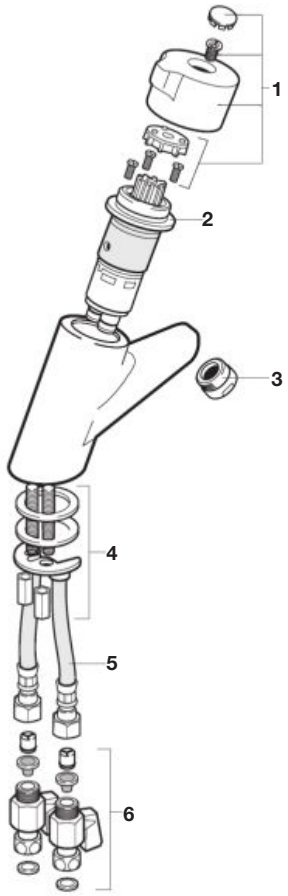

		€
1	**AG0000600R**	113,00
2	**AG0033803R**	N.D.
3	**A525002900**	9,08

		€
4	**AG0035403R**	5,38
5	**AG0046909R**	48,80
6	**AG0056003R**	30,20

		€
7	**AG0055907R**	173,00
8	**AG0069007R**	33,60
9	**AG0069103R**	6,73

		€
10	**AG0069307R**	2,03
11	**AG0069200R**	35,00
14	**AG0071900R**	114,00

Avant

Mezclador de repisa para lavabo / Basin deck-mounted mixer

A5A3179C00

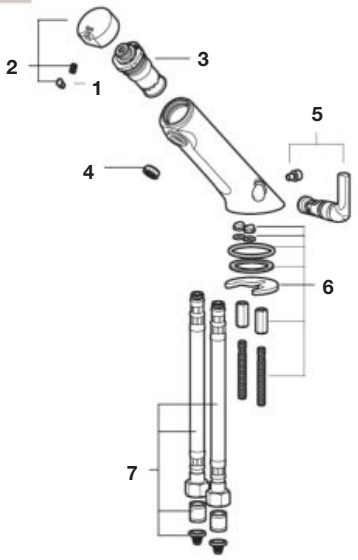

Grifería de repisa para lavabo / Basin deck-mounted faucet

A5A4279C00

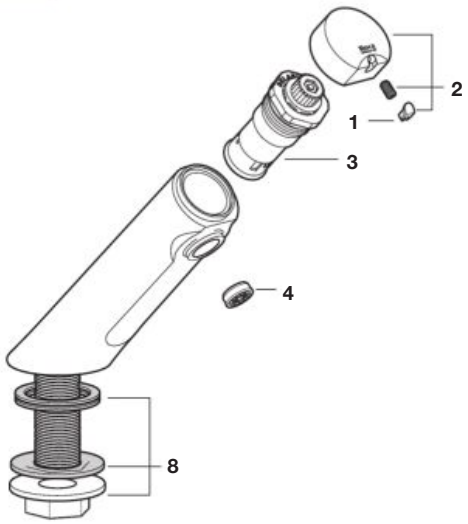

Grifería de repisa para lavabo / Basin deck-mounted faucet

A5A3279C00

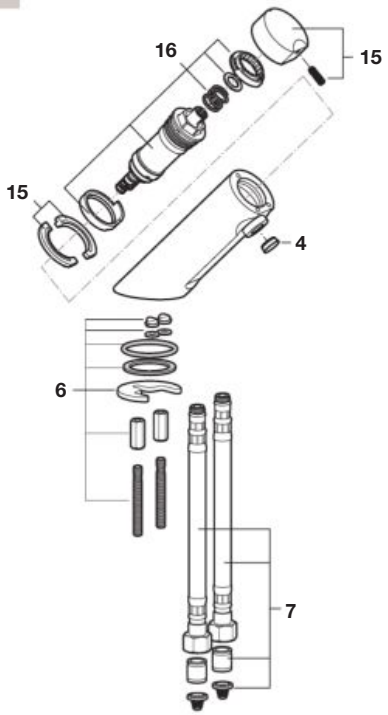

		€
1	**AG0097107R**	5,61
2	**AG0097200R**	36,20
3	**AG0097303R**	74,40
4	**AG0097407R**	6,20

		€
5	**AG0097500R**	48,50
6	**AG0097603R**	18,60
7	**AG0097709R**	47,00
8	**AG0097807R**	7,73

		€
9	**AG0097900R**	15,10
10	**AG0098007R**	4,67
11	**AG0098100R**	36,20
12	**AG0098200R**	12,40

		€
13	**AG0098300R**	62,00
14	**AG0100303R**	66,80
15	**AG0127300R**	145,00
16	**AG0127403R**	261,00

		€
17	**AG0127807R**	54,10
18	**AG0127600R**	67,60
19	**AG0127703R**	120,00

Avant

Grifería de pared para lavabo / Wall basin faucet

A5A7879C00

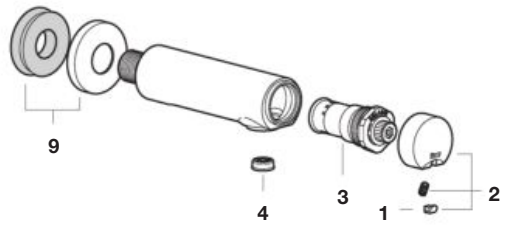

Grifería de pared para lavabo 190mm / Wall basin faucet for 190mm basin

A5A7979C00

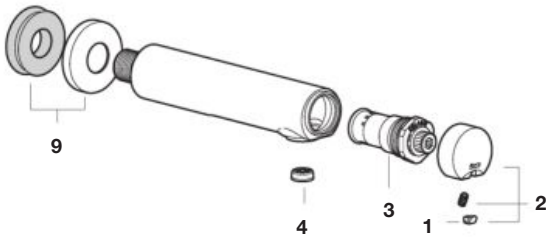

Grifo empotrable para urinario / Urinal wall-mounted faucet

A5A9079C00

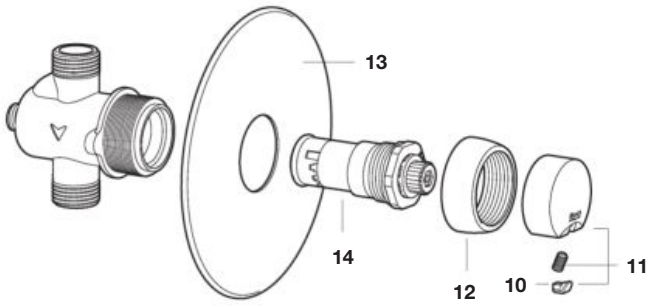

Grifo exterior para urinario / Urinal exterior faucet

A5A9279C00

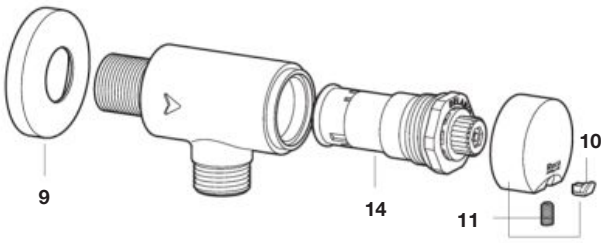

Grifo termostático micro-T pre-mezcla / Thermostatic pre-mixed faucet micro-T

A5A0179C00

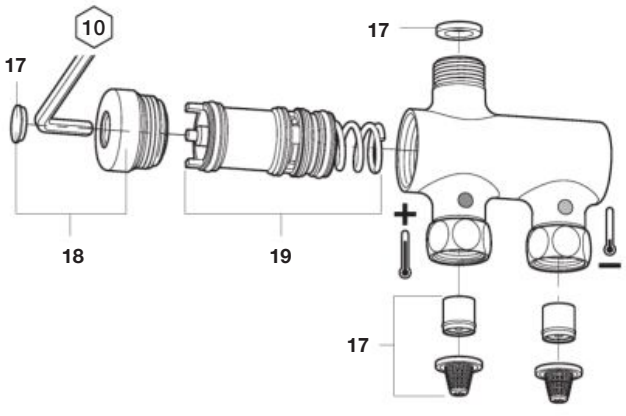

Grifo termostático micro-T / Thermostatic faucet micro-T

A5A0279C00

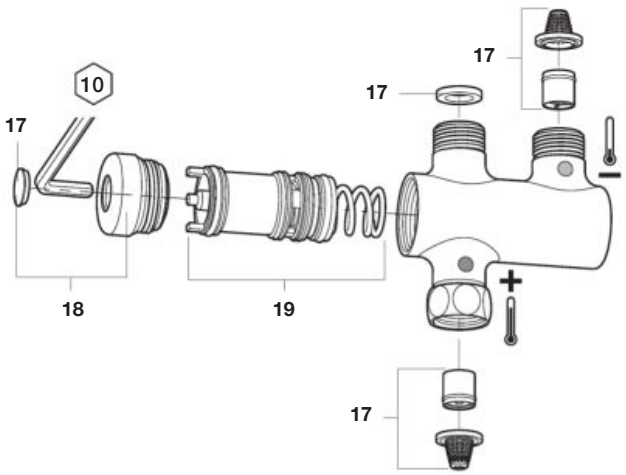

		€
1	**AG0097107R**	5,61
2	**AG0097200R**	36,20
3	**AG0097303R**	74,40
4	**AG0097407R**	6,20

		€
5	**AG0097500R**	48,50
6	**AG0097603R**	18,60
7	**AG0097709R**	47,00
8	**AG0097807R**	7,73

		€
9	**AG0097900R**	15,10
10	**AG0098007R**	4,67
11	**AG0098100R**	36,20
12	**AG0098200R**	12,40

		€
13	**AG0098300R**	62,00
14	**AG0100303R**	66,80
15	**AG0127300R**	145,00
16	**AG0127403R**	261,00

		€
17	**AG0127807R**	54,10
18	**AG0127600R**	67,60
19	**AG0127703R**	120,00

Avant

Grifería termostática empotrable para ducha / Shower wall-mounted thermostatic faucet

A5A0679C00

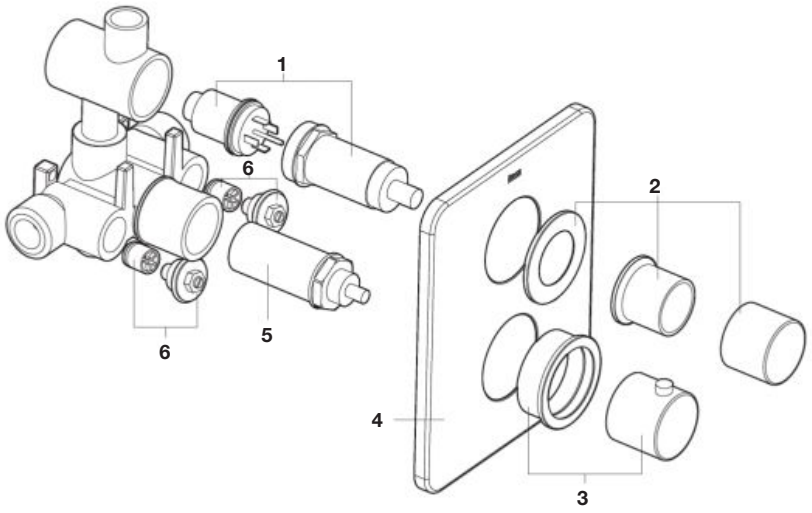

Grifería temporizada empotrable para ducha / Shower wall-mounted self-closing faucet

A5A2217C00

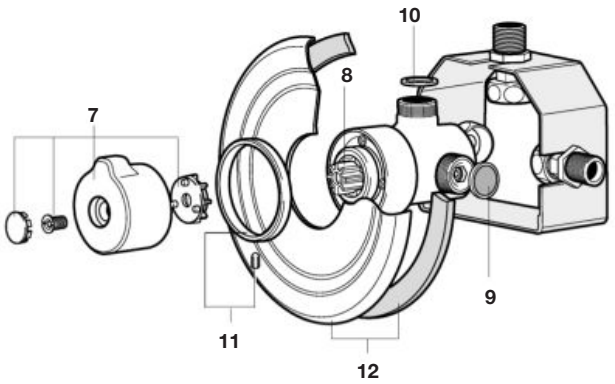

		€
1	**AG0149100R**	379,00
2	**AG0149300R**	85,90
3	**AG0149400R**	173,00
4	**AG0149200R**	98,50

		€
5	**AG0149500R**	226,00
6	**AG0149600R**	271,00
7	**AG0000600R**	113,00
8	**AG0055907R**	173,00

		€
9	**AG0069103R**	6,73
10	**AG0069307R**	2,03
11	**AG0069400R**	32,60
12	**AG0069500R**	123,00

Otras series de griferías temporizadas / Other self-closing faucets

		€
A502850503	Resorte puls mezc lv temp sprint Spring push button	6,20
A504111300	Maneta accion neo-aquamix Operating handle neo-aquamix	175,00
A505119700	Valvula antirret neo-aquamix Check valve neo-aquamix	124,00
A505720400	Maneta regulac mezcl sprint Mixer regulator handle sprint	17,60
A505908607	Mecanismo puls urin sprint Push button mechanism urinal sprint	34,90
A505908707	Mecanismo pulsador lv sprint Push button mechanism basin sprint	34,90
A505908807	Mecanismo pulsador dc sprint Push button mechanism shower sprint	34,90
A5R2817C01	Pulsador sprint plus / Push button sprint plus	189,00
A5R2817C02	Valvula completa sprint plus Valve complete sprint plus	259,00
A5R2817C03	Antiretorno print plus / Check valve sprint plus	63,90

		€
A5R2817C04	Enlace a pared sprint plus Link to wall sprint plus	212,00
A5R2817C05	Kit tornill. Y juntas sprint plus Kit screws and seals sprint plus	73,50
A5R3117C01	Jgo fijacion sprint / plus Set fix. sprint / plus	22,40
AG0084603R	Kit complementos cartucho sprint Kit cartridge complements sprint	67,70
AG0098300R	Roseton sprint Uri b-i timed taps rosette set avant	62,00
AG0100200R	Kit antiretorno y filtro sprint (2u) Kit check-valve & filters sprint (2u)	24,10
AG0100900R	Kit pulsador sprint plus empotrable Kit build-in sprint plus push-button	273,00
AG0101000R	Kit embellecedor sprint plus empotrable Kit build-in sprint plus hudcap	288,00
AG0101100R	Kit pulsador sprint (5a9017) Kit push-button sprint (5a9017)	145,00

Fluxor Gem

Fluxor exterior para inodoro / Toilet exterior fluxor

A526900610

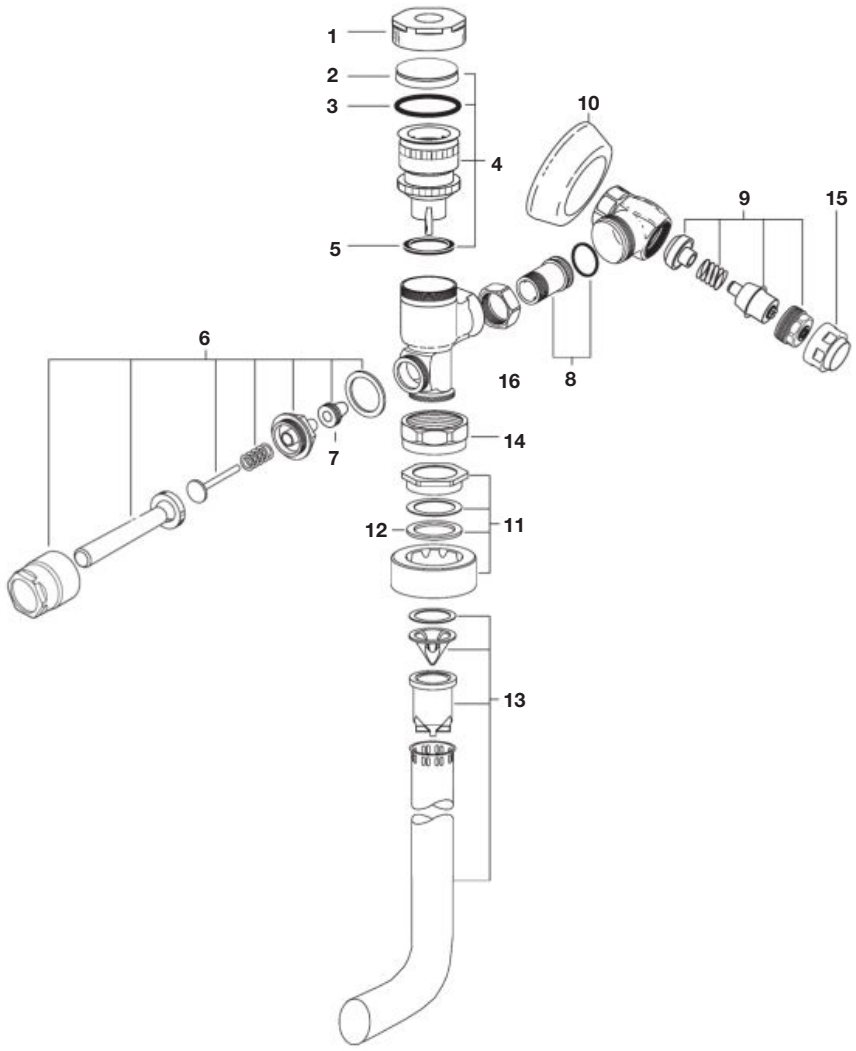

		€
1	**AG0081400R**	69,60
2	**AG0093807R**	32,10
3	**AG0093907R**	49,40
5		
7		
12		
4	**AG0093707R**	153,00
6	**AG0058100R**	98,20

		€
8	**AG0094200R**	49,40
9	**AG0094603R**	148,00
10	**AG0112900R**	13,40
11	**AG0094703R**	77,60
13	**AG0113000R**	122,00
14	**AG0094400R**	36,20
15	**AG0113100R**	47,90
16	**AG0219800R**	27,40

Aqualine Basic

Fluxor de 3/4” para inodoro / 3/4” toilet fluxor

A5A9477C00

ADMITE / ADMITS

7



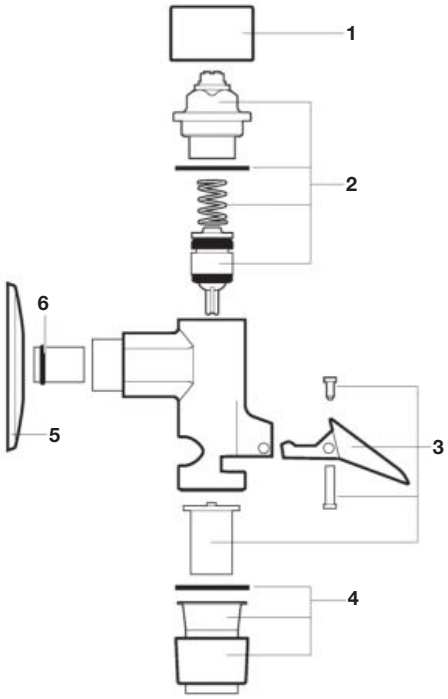

		€
1	**AG0115200R**	34,90
2	**AG0115303R**	88,50
3	**AG0115400R**	52,90

		€
4	**AG0115500R**	24,40
5	**AG0115900R**	6,32
6	**AG0119407R**	28,80

Producto acabado compatible:
Compatible finished product

		€
7	**A505521600**	-

Aqualine Plus

Fluxor de 3/4” para inodoro / 3/4” toilet fluxor

A5A9577C00

ADMITE / ADMITS

5

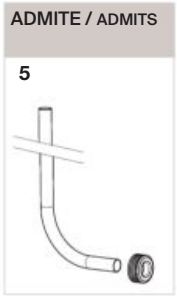

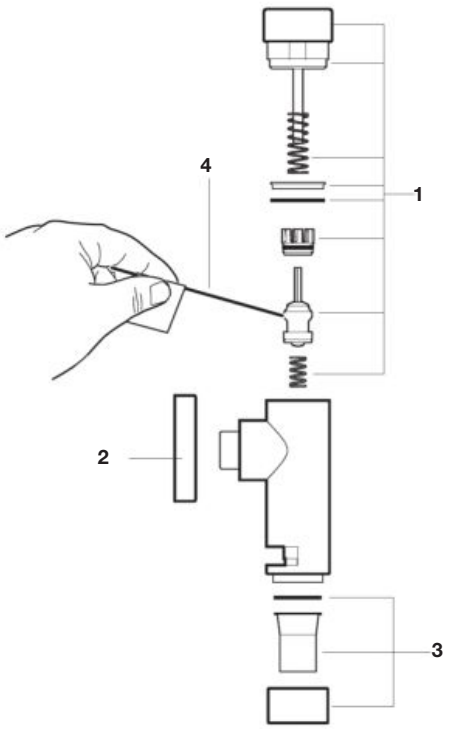

		€
1	**AG0117700R**	N.D.
2	**AG0117800R**	44,60
3	**AG0117900R**	71,70
4	**AG0140600R**	14,40

Producto acabado compatible:
Compatible finished product

		€
5	**A505521600**	-

Aqualine

Fluxor exterior para urinario 1/2" / Urinal 1/2" exterior fluxor

A506902010

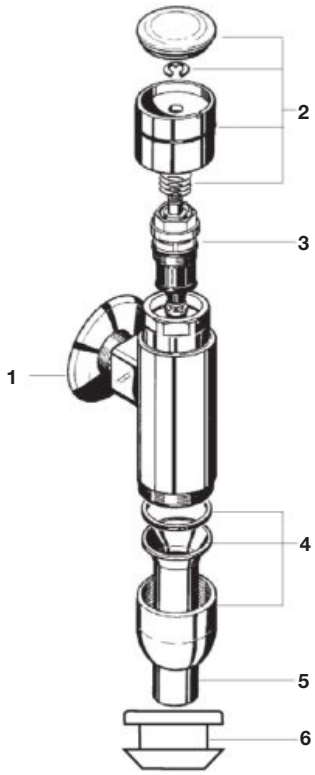

		€			€
1	**AG0104500R**	4,97	4	**AG0104900R**	46,50
2	**AG0104600R**	64,90	5	**AG0104800R**	63,90
3	**AG0104700R**	203,00	6	**AG0105000R**	16,10

Fluxor para inodoro 3/4" / Toilet 3/4" fluxor

A506902110

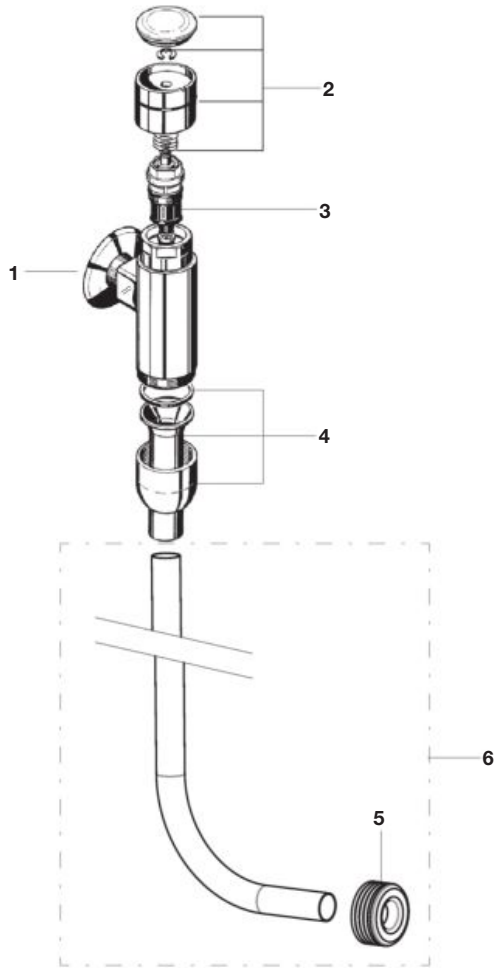

		€			€
1	**AG0133200R**	25,80	4	**AG0133400R**	103,00
2	**AG0133300R**	99,40	5	**AG0133500R**	10,60
3	**AG0068403R**	173,00			

Producto acabado compatible:
Compatible finished product

		€
6	**A505521600**	-

Aqualine Empotrado

Descarga 6 litros / 6 litres flush

A5A9677C00

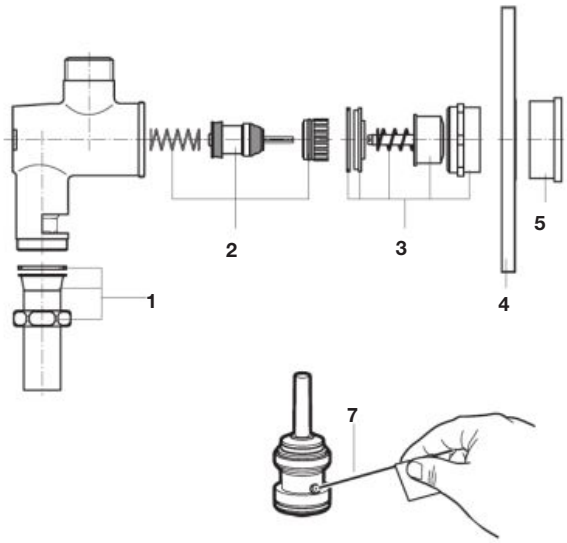

En caso de descarga muy larga, limpiar la boquilla con la aguja especial.

In case of a too long flushing time, clean the nozzle with the special needle.

De doble descarga 6/3 litros / 6/3 litres double flush

A5A9777C00

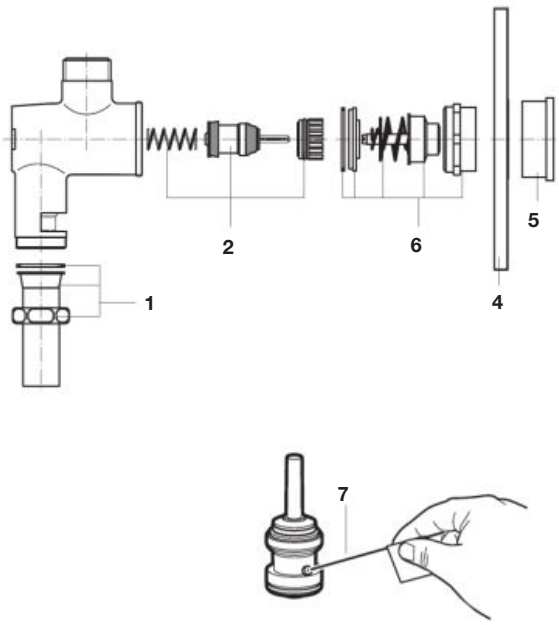

En caso de descarga muy larga, limpiar la boquilla con la aguja especial.

In case of a too long flushing time, clean the nozzle with the special needle.

		€
1	**AG0151700R**	31,70
2	**AG0151800R**	52,00
3	**AG0152100R**	35,80
4	**AG0152200R**	85,30

		€
5	**AG0152300R**	21,50
6	**AG0152400R**	72,30
7	**AG0140600R**	14,40

Aqualine Confort

Fluxor de 1/2” para Urinario / Urinal 1/2” fluxor

A5A9177C00

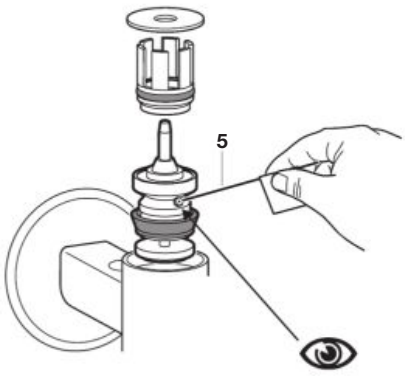

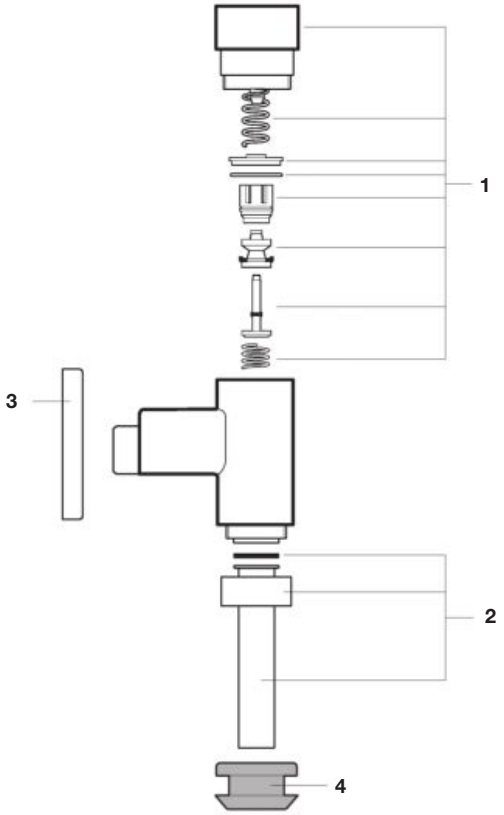

	€
1 **AG0114800R**	129,00
2 **AG0115600R**	36,10
3 **AG0115700R**	7,88

	€
4 **AG0115800R**	10,50
5 **AG0140600R**	14,40

Fluxores de empotrar/
Built-in flush valves

Fluxor de empotrar 3/4” para inodoro doble descarga 3/6L /
Toilet wall-mounted 3/4” fluxor with 3/6L double flush

A5A9779C00



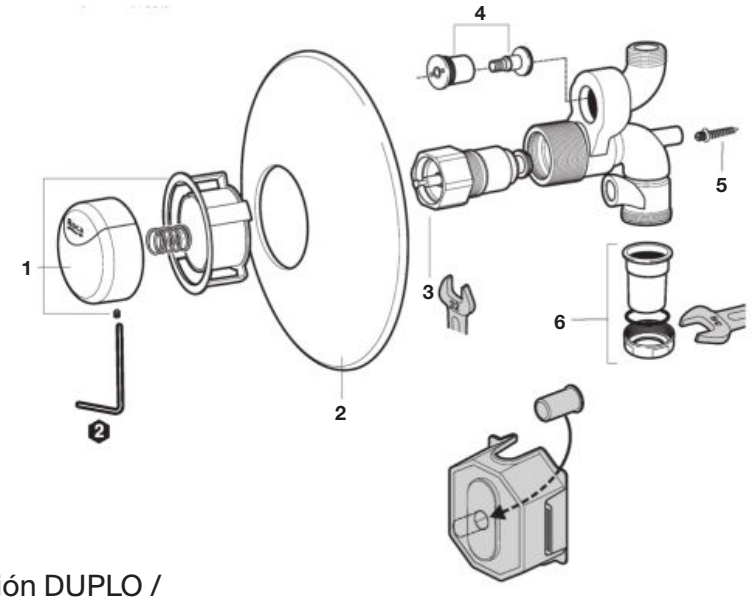

		€
1	**AG0084700R**	124,00
2	**AG0084800R**	97,30
3	**AG0084903R**	198,00

		€
4	**AG0081103R**	11,40
5	**AG0104900R**	46,50
6	**AG0081303R**	37,30

Fluxor de empotrar 3/4 para sistemas instalación DUPLO /
Wall-mounted 3/4 fluxor for DUPLO systems

A5~~25~~657200

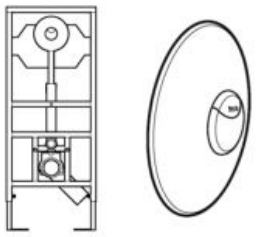

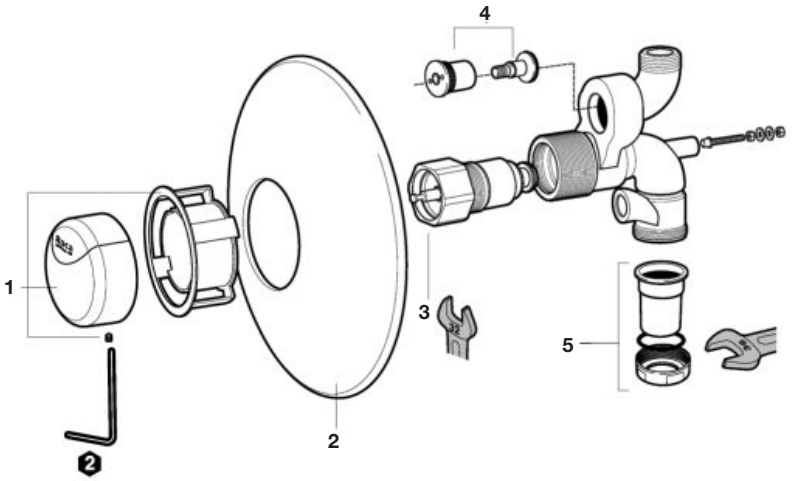

		€
1	**AG0084700R**	124,00
2	**AG0084800R**	97,30
3	**AG0084903R**	198,00

		€
4	**AG0081103R**	11,40
5	**AG0081303R**	37,30

Fluxor de empotrar 3/4” descarga simple / Wall-mounted 3/4” faucet single flush

A506902710	para Duplo WC / for Duplo WC
A506902810	para inodoro / for toilet

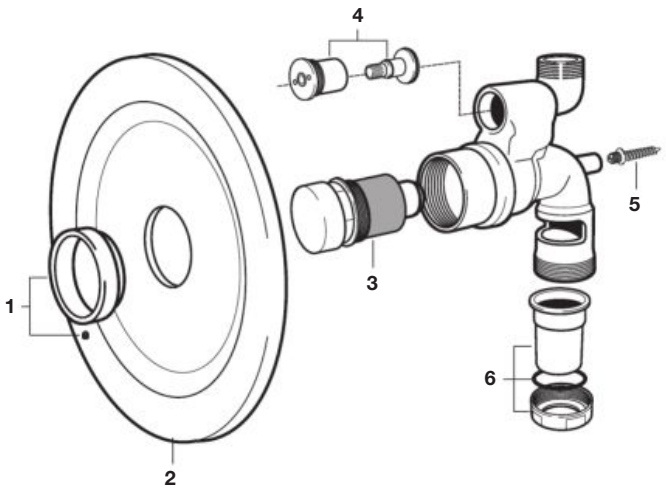

E: Empotrar / Wall-mounted
D: Duplo

			€
1	**AG0080500R**		20,30
2	**AG0080600R**		87,10
3	**AG0080700R**	E	161,00
	AG0080800R	D	223,00

			€
4	**AG0080903R**	E	81,70
	AG0080903R	D	81,70
5	**AG0081103R**	E	11,40
	AG0081203R	D	38,00
6	**AG0081303R**		37,30

Otras series de fluxores / Other fluxors

		€
A501111100	Soporte c valv fluxor 3/4" Valve body support f/3/4" flush valve	36,00
A501750900	Embellecedor fluxor empot. Ornamental cap f/blt-in flush valve	29,70
A502621103	Tornillo valv flux aqua Valve screw f/aqua flushers	4,00
A502750603	Arandela seguridad Safety washers	3,36
A503353607	Obturador camara compensacio (dn15) Surge-tank seal f/aqua flush valve	13,10
A503355007	Junta plana 20x23x1 fluxor a Flat washer 20x23x1 f/aqua flush valve	2,00
A503355707	Junta plana fluxor aqua Joint f/aqua flush valve	3,32
A503355807	Junta fluxor aqua Joint f/aqua flush valve	2,33
A503357007	Junta plana mec flux 16x26x3 Washer 16x26x3 f/flush valve	15,50
A503520400	Cabeza pulsadora fluxor inod Push-button for wc flush valve	39,60
A503680107	Tuerca racord flux aqua Nipple nut f/aqua-flush valvei	25,50
A503810400	Placa caperuza fluxor urin Cap plate for urinal flush valve	25,30
A503810500	Placa caperuza fluxor inod Cap plate for wc flush valve	9,36
A504110503	Llave paso fluxor emp inod Stopcock fluxor recessed toilet	341,00
A504110603	Cuerpo compl fluxor emp urin Body compl fluxor emp urin	565,00
A504112103	Valvula completa Complete valve	188,00
A504200403	Enlace entrada agua c/racor Link water inlet c / fitting	92,00
A504250407	Tubos alim fluxor emp inod Supply tube f/blt-in wc flush valve	6,53
A504310300	Asiento con torica Seat with ring	46,90

		€
A504660203	Aguja regul fluxor aqua Nail regul fluxor aqua	9,29
A504810300	Placa fluxor empotrar inod Toilet flush plate fluxor	200,00
A504810400	Tornillos pl fluxor emp inod Toilet flush bolts pl fluxor	4,85
A521600100	Capuchon roscado llave flux Threaded cap f/flux tap	62,50
A522852303	Resorte mecanismo val fluxo Spring f/flush valve mechanism	10,00
A522853303	Resorte compresión Gem Compression spring gem	10,00
A523313407	Valvula llave paso 1 fluxom Rubber seat for flush valve	33,10
A523363507	Anillo torico enlac fluxomet O-ring enlac fluxomet	12,60
A524311203	Valvula descarga flux corona Corona discharge valve flux	38,30
A525125109	Mecanismo valv flux corona Corona mechanism valve fluxor	196,00
A525719100	Accionamiento fluxor corona Actuating fluxor corona	156,00
A525936100	Valvula antirretorno fluxor Vacuum breaker for flush valve	115,00
AG0077503R	Kit valvula fluxor emp inodoro Kit valve build-in flush wc bowl	304,00
AG0077600R	Kit pulsador fluxor emp inodoro Kit pulsh-but build-in flush wc bowl	432,00
AG0082107R	Kit memb obtur flux emp dn-20 Kit obturator memb b-in flush valve	13,50
AG0099707R	Kit membrana flx Gem 4 agujeros (2u) Kit flx gem membrane 4 holes(2u)	37,60
AG0103607R	Kit caperuza fluxor aqua Kit cap flush valve aqua	41,50
AG0114000R	Kit piston de regulacion aqualine Kit regulating piston aqualine	67,70

Vertederos / Slop hoppers

		€
A526005510	Reja n-vertedero-almohadilla Grating new-slop hopper-rubber pad	90,20
AV0007200R	Juego de tornillos de fijación Victoria (taza y bidé) y Garda Floor fixing kits cp verticl	2,72

Tanque Universal / Universal tank

Basic tank One / Basic tank One

A890200000

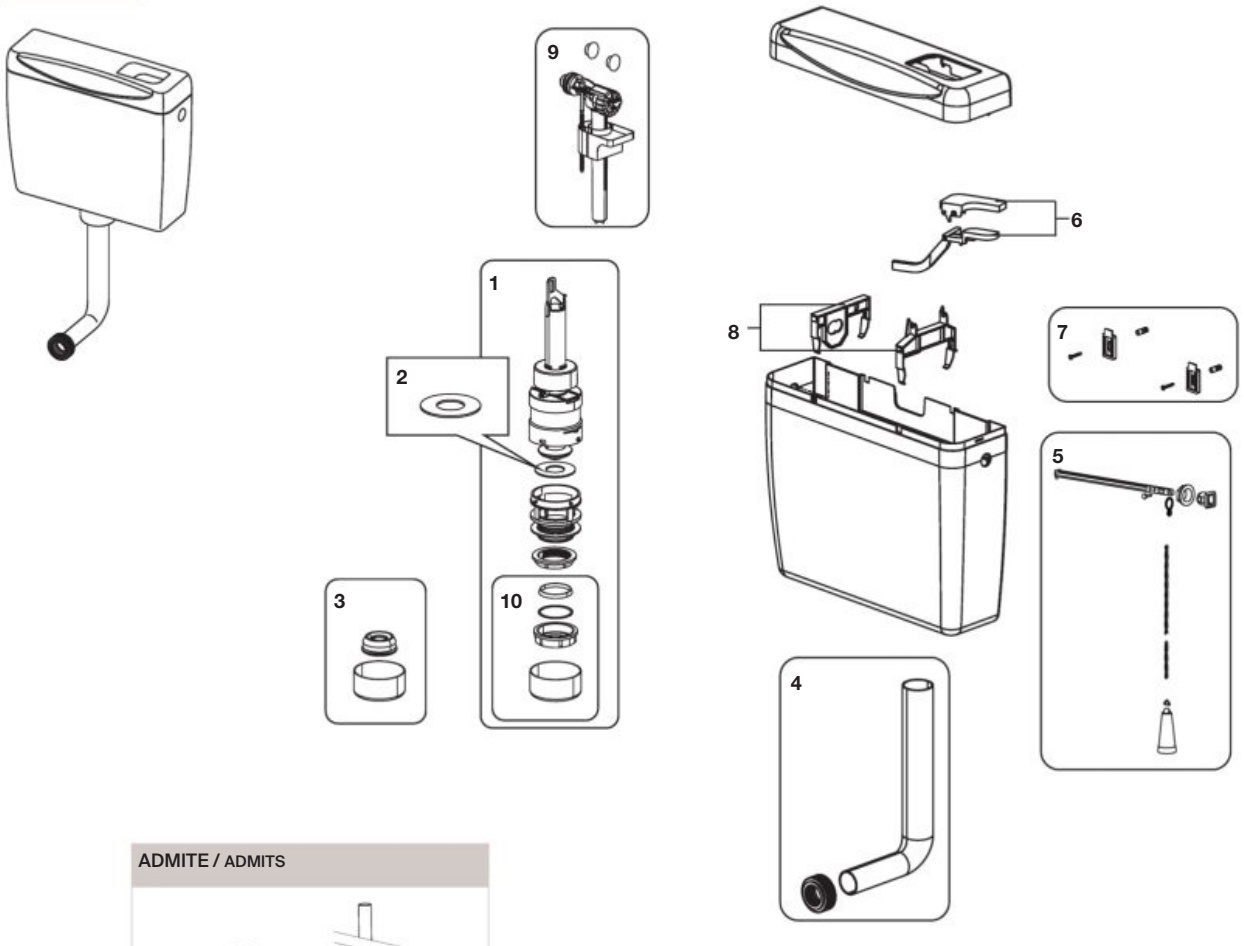

ADMITE / ADMITS

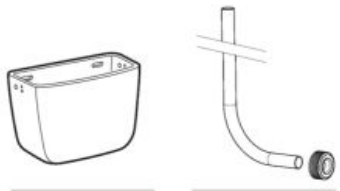

A343900001 **A890200001**

		€
2	**AV0049500R**	5,18
3 10	**AV0048800R**	31,70
4	**AV0048900R**	30,20

		€
5	**AV0049000R**	25,60
6	**AV0049200R**	20,00
7	**AV0049100R**	7,12
8	**AV0049400R**	11,90

Producto acabado compatible:
Compatible finished product

		€
1	**A892030000**	-
9	**A822504300**	-

Lavabos, muebles de baño, espejos e iluminación / Washbasins, bath furniture, mirrors and lighting


OHTAKE

404	**Surfex® Lavabos configurables /** Surfex® configurable Washbasins	455	**Domi**
		457	**Anima**
406	**Desagües Surfex® /** Surfex® Waste drains	459	**Mini**
		460	**Mini Pro**
407	**Lavabos Stonex® /** Stonex® Washbasins	461	**Extra**
		462	**Delta**
409	**Storia**	464	**Heima**
411	**Ohtake**	467	**Savana**
413	**Horizon**	467	**Suma**
415	**Terra**	468	**Otras series de muebles /** Other furniture series
416	**Element**		
417	**Stratum-N**	468	**Espejos LED /** LED Mirrors
421	**Prisma**	469	**Prisma**
428	**Natura**	470	**Luna Ambient**
429	**Lander**	471	**Luna & Eidos**
430	**Tenue**	475	**Luna**
433	**Aleyda**	480	**Eidos-N**
438	**Tenet**	481	**Starlight**
440	**Tenor**	481	**Moonlight**
442	**Optica**	482	**Delight**
454	**Romea**	483	**Smartlight**


ALEYDA

Surfex® Lavabos configurables
Surfex® configurable Washbasins

Lavabos configurables Surfex Modo / Surfex configurable washbasins Modo

LAVABO MURAL SURFEX CONFIGURABLE MODO Surfex configurable mural washbasin Modo	
AW11.....	1 cubeta / 1 bowl
AW12.....	2 cubetas / 2 bowls
AW13.....	3 cubetas / 3 bowls
AW14.....	4 cubetas / 4 bowls

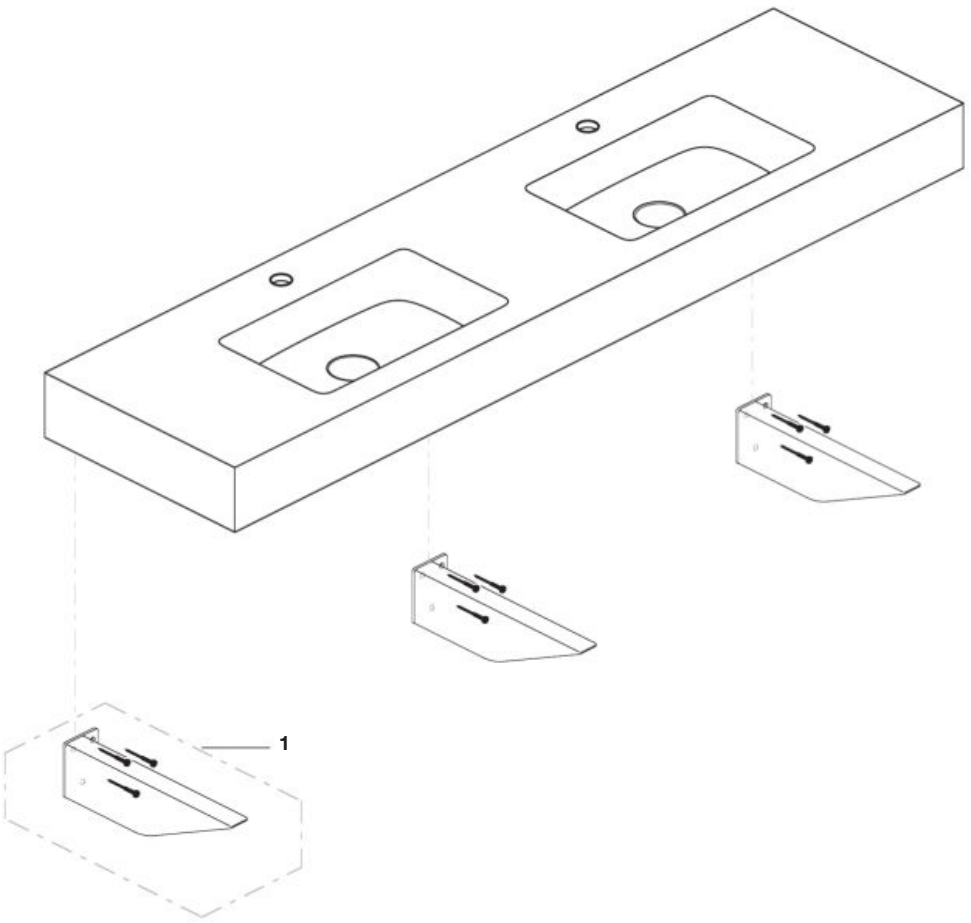

			€
1	2 un	**A822507300**	-
	3 un	**A822507400**	-

Surfex® Lavabos configurables
Surfex® configurable Washbasins

Lavabos configurables Surfex Modo / Surfex configurable washbasins Modo

LAVABO MURAL SURFEX CONFIGURABLE MODO
Surfex configurable mural washbasin Modo

AW8.....

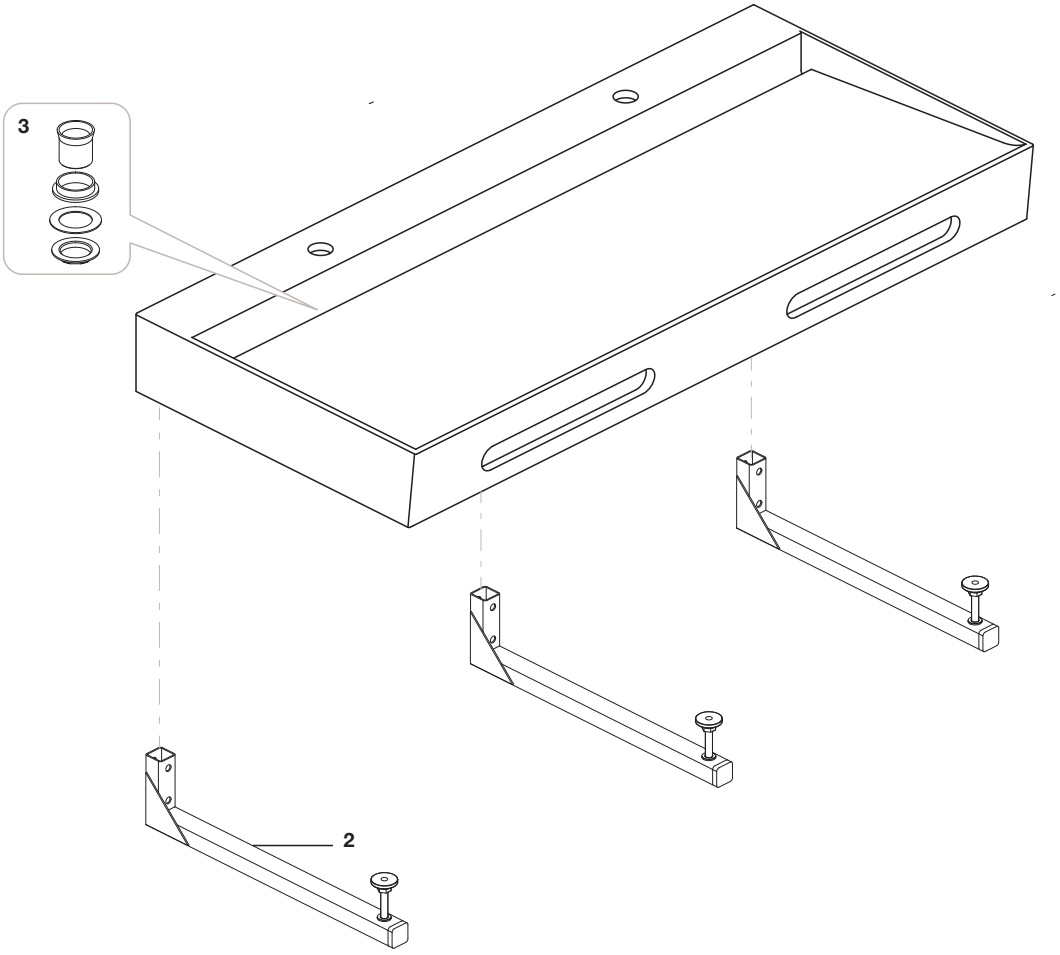

			€
2	2 un	**AV0062600R**	292,00
	3 un	**AV0062700R**	439,00
3		**AV0062800R**	44,40

Desagües Surfex®
Surfex® Waste drains

Solo cubierta de Surfex / Only cover in Surfex

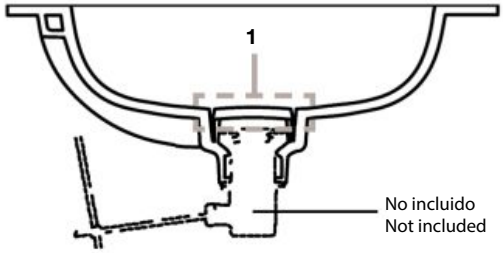

Desagüe abierto / Open waste drain

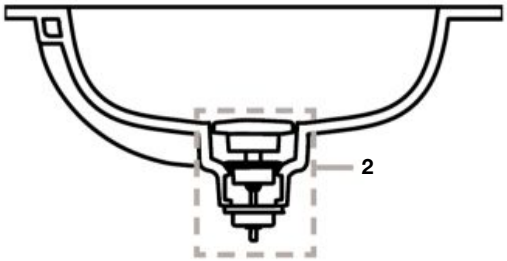

Desagüe Pop up / Pop up waste drain

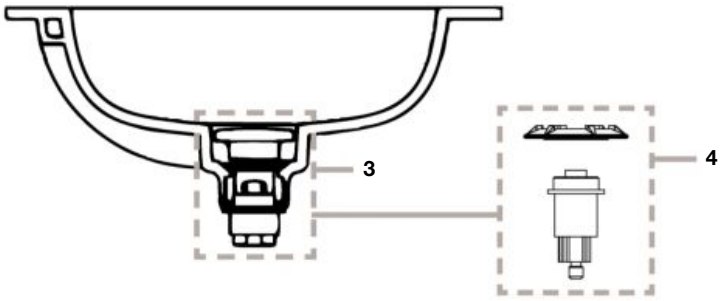

		€
1	**AV0043500R**	208,00
2	**AV0043600R**	194,00
3	**AV0033300R**	185,00
4	**AG0238300R**	11,10

Lavabos Stonex®
Stonex® Washbasins

Lavabos Stonex Dash Standard / Stonex washbasins Dash Standard

LAVABO MURAL STONEX DASH STANDARD Stonex Mural washbasin Dash Standard	
A2W8024000	650 x 550
A2W8025000	650 x 500

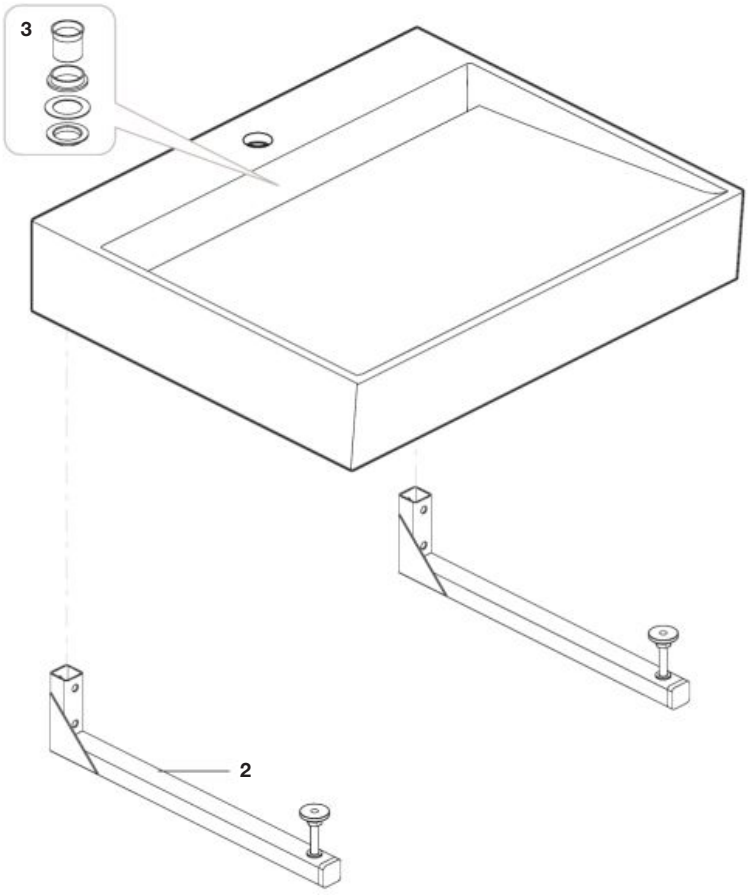

			€
2	2 un	**AV0062600R**	292,00
	3 un	**AV0062700R**	439,00
3		**AV0062800R**	44,40

Lavabos Stonex®
Stonex® Washbasins

Lavabos Stonex Acces / Stonex washbasins Access

LAVABO MURAL STONEX ACCESS Stonex mural washbasin Access	
A2W8004000	850 x 550
A2W8003000	650 x 550



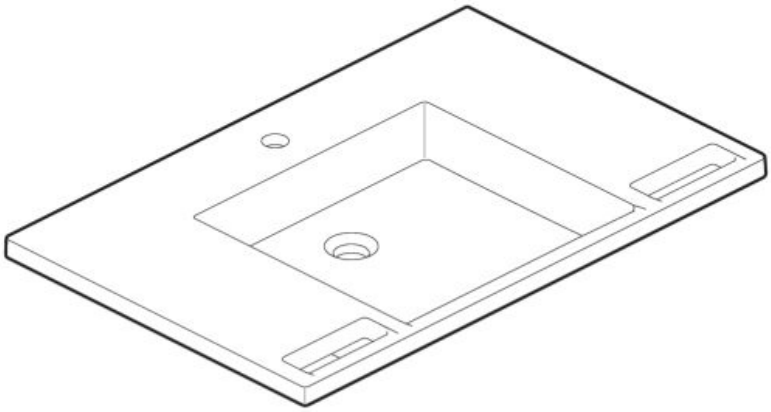

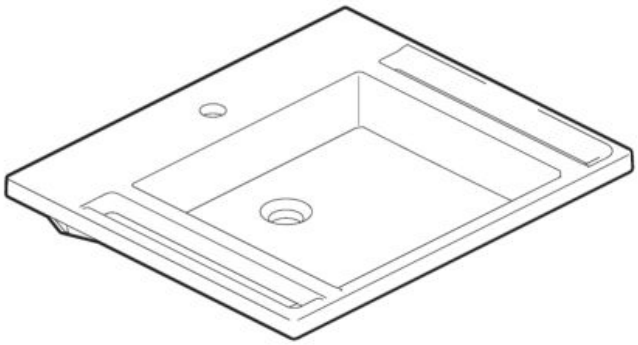

		€
4	**AV0007500R**	5,51

Storia

Mueble base auxiliar de una puerta / Auxiliary one door vanity unit

MUEBLE BASE 1 PUERTA / Base unit 1 door	
A857333...	300 mm
A857334...	400 mm

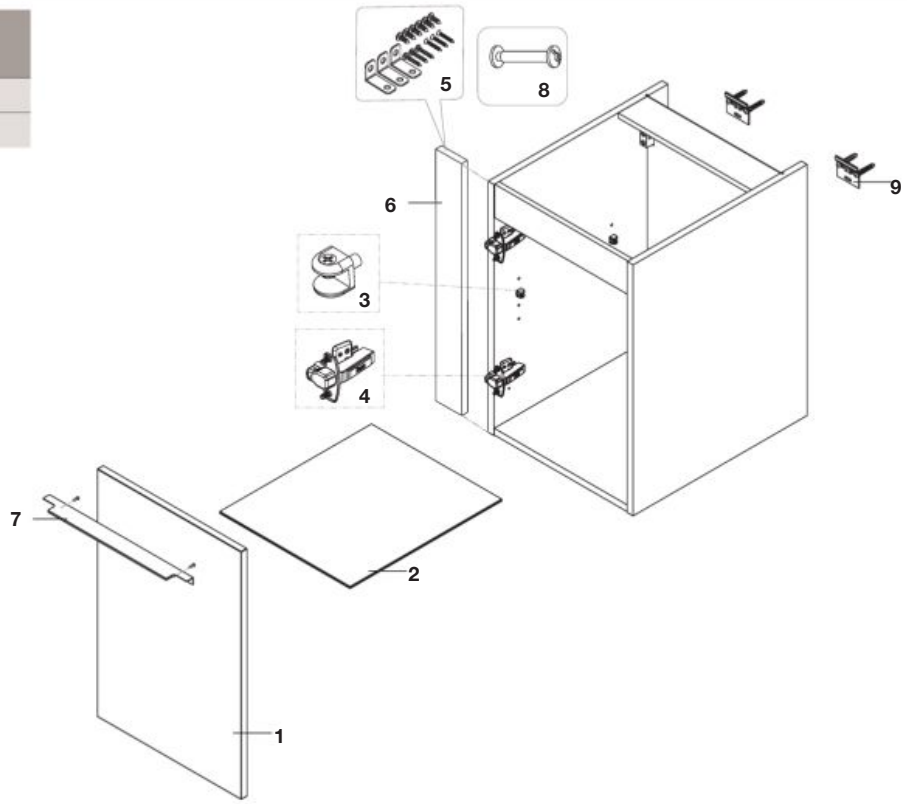

Mueble base auxiliar abierto / Open auxiliary vanity unit

MUEBLE BASE ABIERTO / Base unit open	
A857335...	400 mm

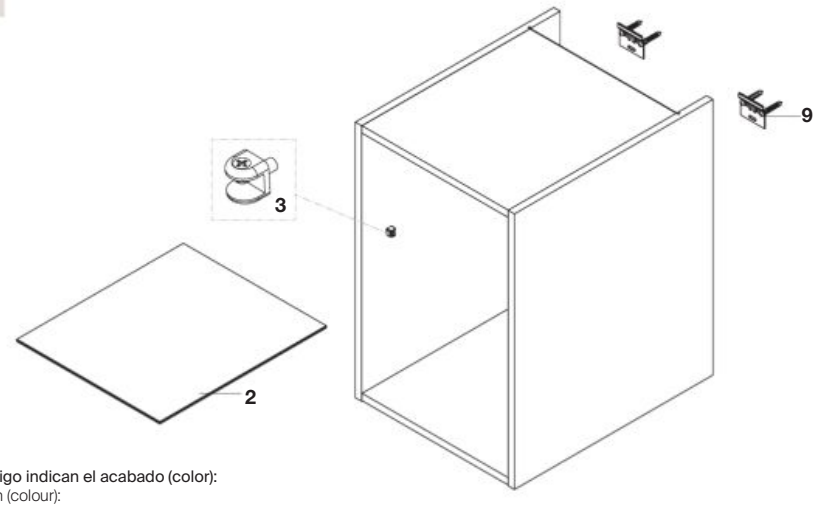

Las últimas posiciones de cada código indican el acabado (color):
The lasts positions indicates the finish (colour):

Producto Product	Recambio Spare Part	Acabado Finish
806	**WH**	**Blanco brillante /** White Lacquered
402	**OA**	**Roble city texturizado /** City Oak
434	**AS**	**Fresno nórdico /** Nordic Ash
447	**GM**	**Gris ártico /** Matt Grey

Sólo se muestra el precio del acabado Blanco /
Only the price of the White finish is shown

				€
1		**AU00645..R**	300mm	38,30
		AU00651..R	400mm	34,80
2		**AU0064600R**	300mm	20,50
		AU0065200R	400mm	24,30
3	4 un	**AU0048000R**		3,60
4	2 un	**AU0064700R**		15,10
5		**AU0066200R**		2,62
7		**AU0064900R**	300mm	29,20
		AU0065300R	400mm	35,00
8	5 un	**AU0020900R**		14,80
9	2 un	**AU0013300R**		15,80

Producto acabado compatible:
Compatible finished products:

		€
6	**A857340...**	-

Storia

Mueble base de dos cajones y lavado / Two drawers venity unit and washbasin

UNIK: MUEBLE BASE 2 CAJONES + LAVABO Unik: Base unit 2 drawers + washbasin	
A857336...	600 mm
A857337...	800 mm
A857338...	1000 mm

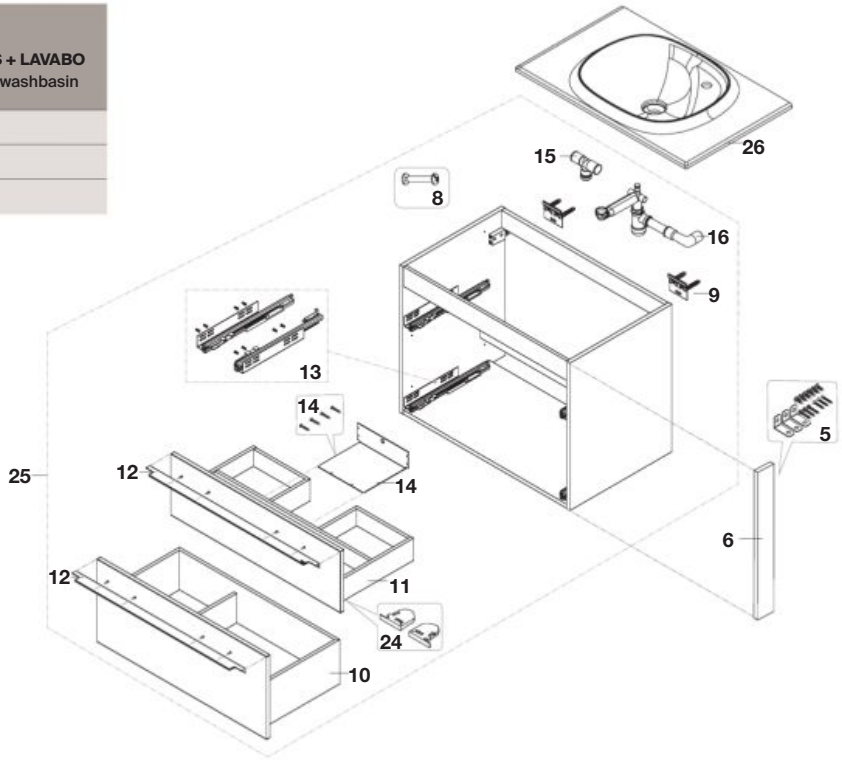

Columna de una puerta con espejo / Mirrored one door column

MÓDULO COLUMNA Column unit	
A857339...	1400 mm

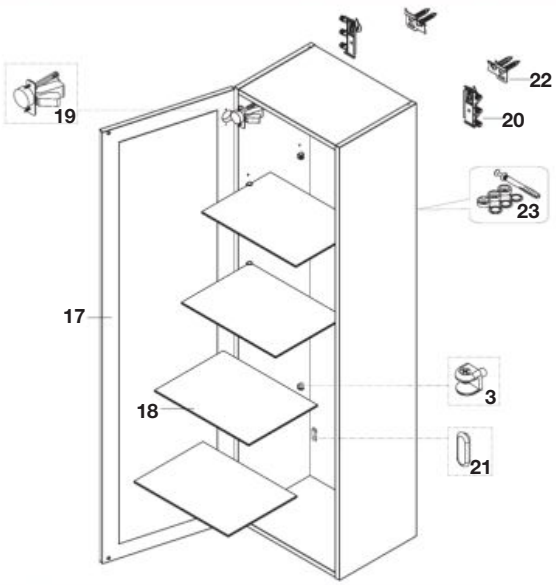

Las últimas posiciones de cada código indican el acabado (color):
The lasts positions indicates the finish (colour):

Producto Product	Recambio Spare Part	Acabado Finish
806	**WH**	**Blanco brillante /** White Lacquered
402	**OA**	**Roble city texturizado /** City Oak
434	**AS**	**Fresno nórdico /** Nordic Ash
447	**GM**	**Gris ártico /** Matt Grey

				€
3	4 un	**AU0048000R**		3,60
5		**AU0066200R**		2,62
8		**AU0020900R**		14,80
9	2 un	**AU0013300R**		15,80
10		**AU00642..R**	600mm	79,80
		AU00638..R	800mm	88,70
		AU00640..R	1000mm	102,00
11		**AU00641..R**	600mm	88,20
		AU00643..R	800mm	98,50
		AU00644..R	1000mm	47,70
12	2 un	**AU0065500R**	600mm	69,80
	2 un	**AU0065600R**	800mm	79,50
	2 un	**AU0065700R**	1000mm	119,00

			€
13		**AU0065800R**	48,70
14		**AU0065900R**	16,00
15		**AU0020800R**	7,68
16		**AU0014100R**	44,90
17		**AU00661..R**	193,00
18		**AU0066000R**	68,00
19	2 un	**AU0042700R**	25,80
20		**AU0013700R**	16,30
21	4 un		
21	4 un	**AU0013700R**	16,30
22		**AU0013800R**	12,10
23	1 un		
24		**AU0067500R**	9,07

Sólo se muestra el precio del acabado Blanco /
Only the price of the White finish is shown

Producto acabado compatible:
Compatible finished products:

				€
6	**A857340...**			-
25	**A857336...**	600mm		-
	A857337...	800mm		-
	A857338...	1000mm		-
26	**A3270BC000**	600mm		-
	A3270BB000	800mm		-
	A3270BA000	1000mm		-

Ohtake

Lavabo oval sobre encimera Fineceramic / Over countertop oval washbasin Fineceramic

LAVABO SOBRE ENCIMERA
Over countertop washbasin

A327A13..0



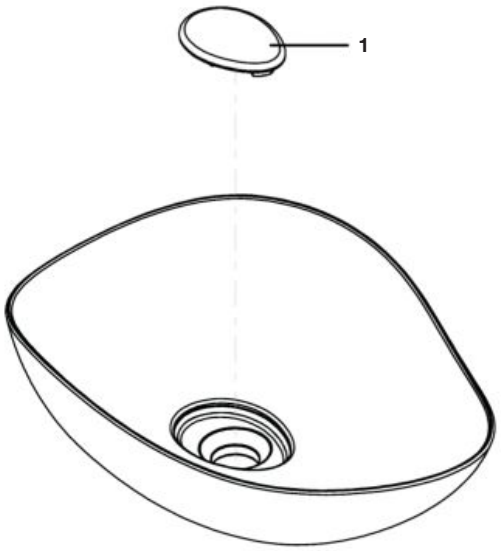

Las últimas posiciones de cada código indican el acabado (color):
The lasts positions indicates the finish (colour):

Producto Acabado	
Product	Finish
00	**Blanco /** White
08	**Negro /** Black
62	**Blanco mate /** White matt
63	**Perla /** Pearl
64	**Onix /** Onix
65	**Beige /** Beige
66	**Café /** Coffee

		€
1	**AV0059300R**	17,90
	AV0059308R	23,50
	AV0059362R	17,90
	AV0059363R	17,90
	AV0059364R	17,90
	AV0059365R	17,90
	AV0059366R	17,90

Producto acabado compatible:
Compatible finished products:

		€
3	**A506403900**	-

Lavabo sobre encimera Fineceramic / Over countertop washbasin Fineceramic

LAVABO SOBRE ENCIMERA
Over countertop washbasin

A327A15..0



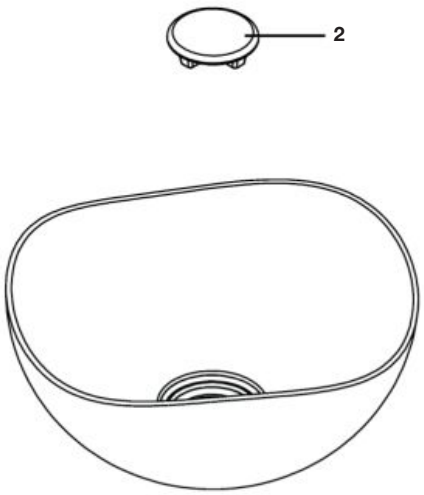

Las últimas posiciones de cada código indican el acabado (color):
The lasts positions indicates the finish (colour):

Producto Acabado	
Product	Finish
00	**Blanco /** White
08	**Negro /** Black
62	**Blanco mate /** White matt
63	**Perla /** Pearl
64	**Onix /** Onix
65	**Beige /** Beige
66	**Café /** Coffee

		€
2	**AV0056300R**	27,40
	AV0056308R	23,50
	AV0056362R	36,50
	AV0056363R	27,40
	AV0056364R	28,80
	AV0056365R	27,40
	AV0056366R	36,50

Producto acabado compatible:
Compatible finished products:

		€
3	**A506403900**	-

Ohtake

Lavabo sobre encimera Fineceramic / Over countertop washbasin Fineceramic

LAVABO SOBRE ENCIMERA
Over countertop washbasin

A327A1N..0



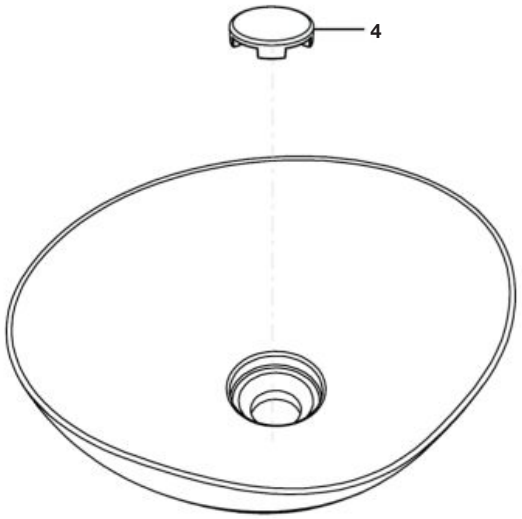

Las últimas posiciones de cada código indican el acabado (color):
The lasts positions indicates the finish (colour):

Producto Product	Acabado Finish
00	Blanco / White
08	Negro / Black
62	Blanco mate / White matt
63	Perla / Pearl
64	Onix / Onix
65	Beige / Beige
66	Café / Coffee

		€
4	**AV00701..R**	-

Producto acabado compatible:
Compatible finished products:

		€
3	**A506403900**	-

Lavabo sobre encimera Fineceramic / Over countertop washbasin Fineceramic

LAVABO SOBRE ENCIMERA
Over countertop washbasin

A327A1P..0



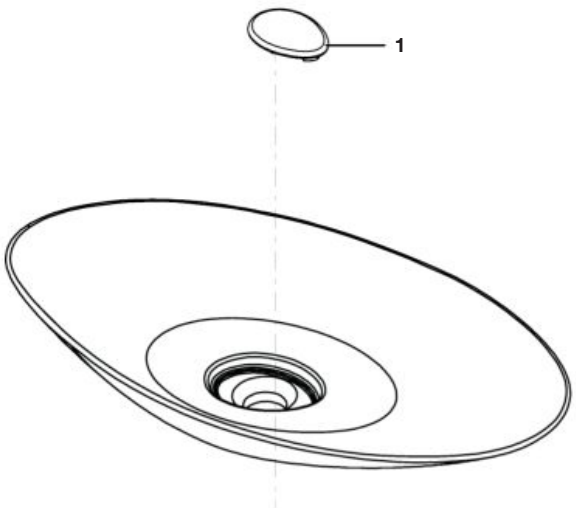

Las últimas posiciones de cada código indican el acabado (color):
The lasts positions indicates the finish (colour):

Producto Product	Acabado Finish
00	Blanco / White
08	Negro / Black
62	Blanco mate / White matt
63	Perla / Pearl
64	Onix / Onix
65	Beige / Beige
66	Café / Coffee

		€
1	**AV00593..R**	17,90

Producto acabado compatible:
Compatible finished products:

		€
3	**A506403900**	-

Horizon

Lavabo sobre encimera / Over countertop washbasin

LAVABO SOBRE ENCIMERA HORIZON Over countertop washbasin Horizon	
A327274..B	View
A327276..B	Geometric

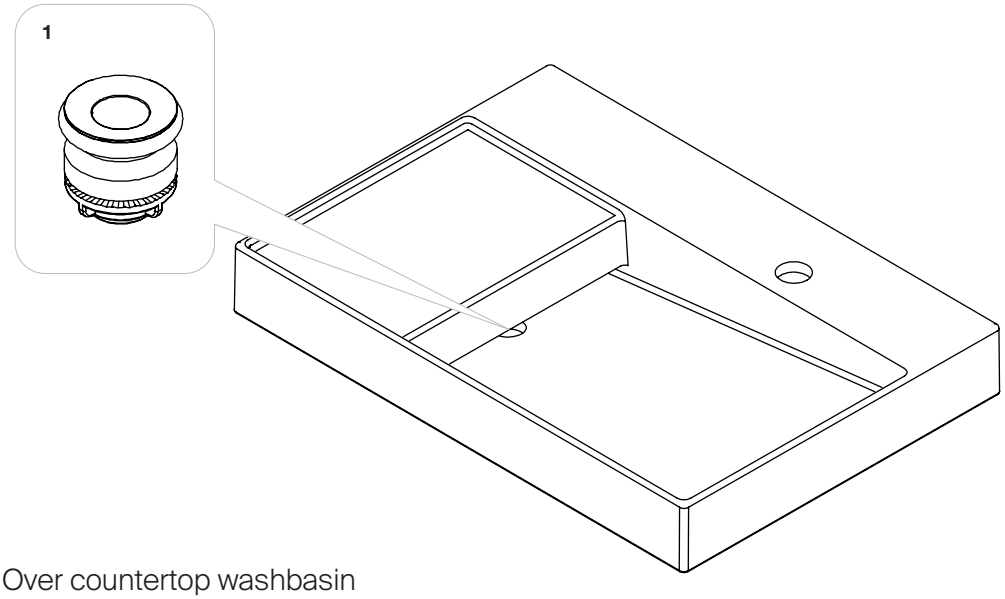

Las últimas posiciones de cada código indican el acabado (color):
The lasts positions indicates the finish (colour):

Producto	**Acabado**
Product	Finish
00	**Blanco /** White
08	**Negro /** Black
62	**Blanco mate /** White matt

		€
1	**AV0063000R**	63,00

Lavabo sobre encimera / Over countertop washbasin

LAVABO SOBRE ENCIMERA HORIZON Countertop washbasin Horizon	
A327275..B	Skyline

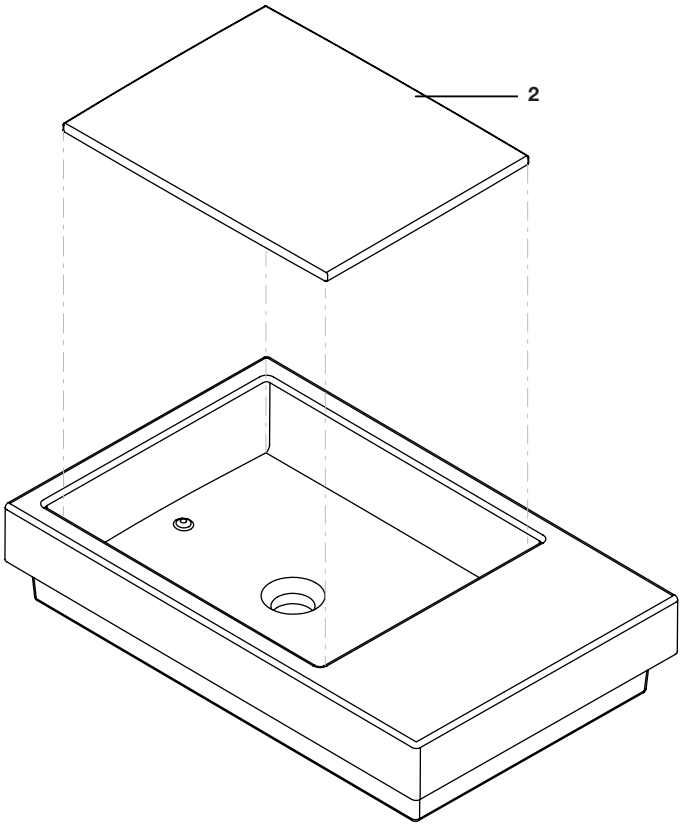

Las últimas posiciones de cada código indican el acabado (color):
The lasts positions indicates the finish (colour):

Producto	**Acabado**
Product	Finish
00	**Blanco /** White
08	**Negro /** Black
62	**Blanco mate /** White matt

		€
2	**AV0063200R**	52,90
	AV0063208R	52,90
	AV0063262R	52,90

Horizon

Mueble base cajón Horizon / Base unit 1 drawer Horizon

UNIK: MUEBLE BASE 1 CAJÓN + LAVABO DASH Base unit 1 drawer + Dash WB	
A851954...	700 mm
A851955...	900 mm

UNIK: MUEBLE BASE 1 CAJÓN + LAVABO geometric Base unit 1 drawer + Geometric WB	
A851952...	700 mm
A851953...	900 mm

UNIK: MUEBLE BASE 1 CAJÓN + LAVABO view Base unit 1 drawer + View WB	
A851948...	700 mm
A851949...	900 mm

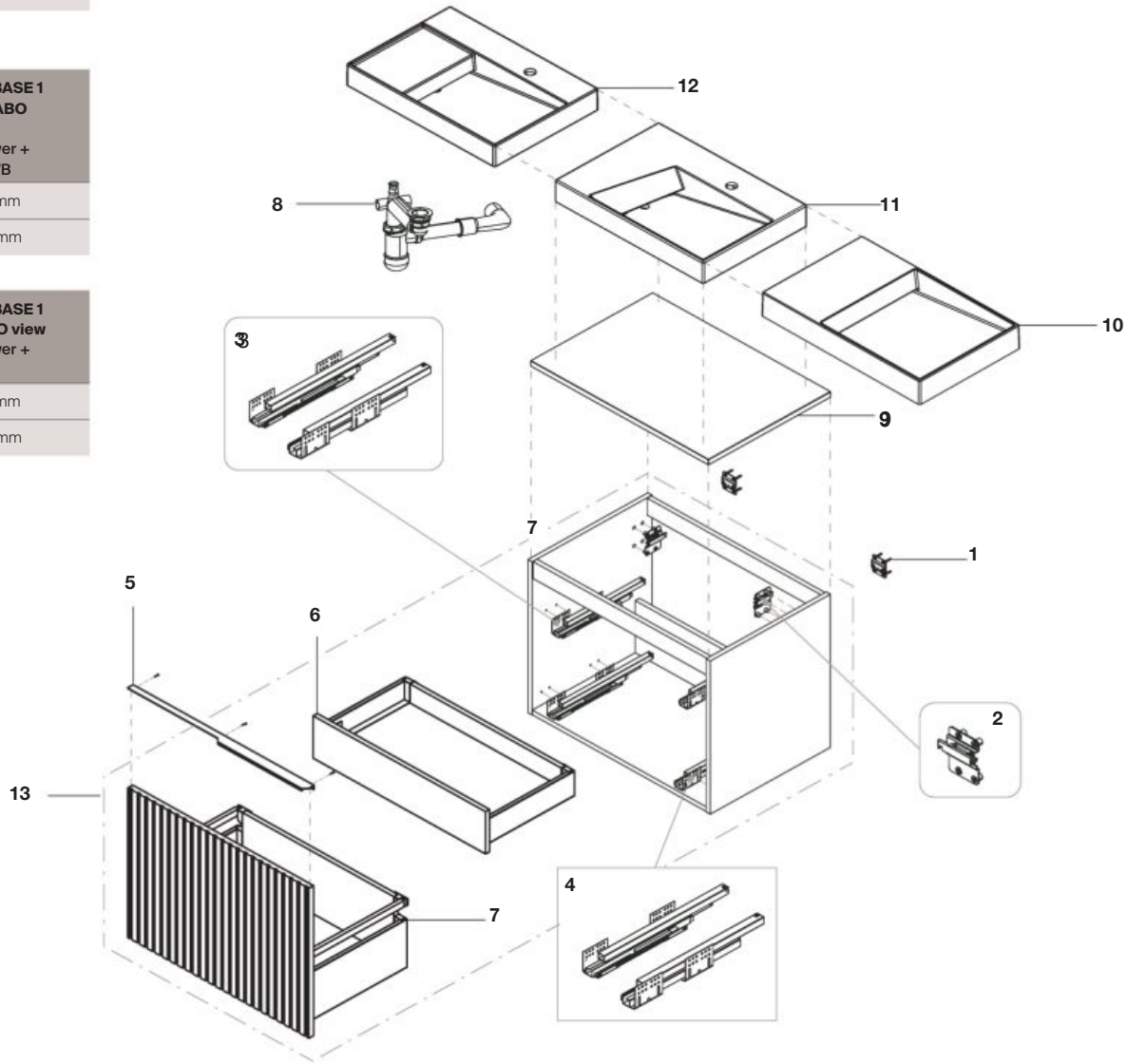

Las últimas posiciones de cada código indican el acabado (color):
The lasts positions indicates the finish (colour):
Producto Acabado
Product Finish
554 Blanco mate / Matt white
553 Negro mate / Matt Black

				€
1	2 un	**AU0105100R**		17,50
2	2 un	**AU0105200R**		25,30
3	+	**AU0105400R**		62,30
4	+	**AU0105500R**		68,20
5		**AU0105800R**	700 mm	51,80
		AU0105900R	900 mm	59,50
6		**AU0106000R**	700 mm	136,00
		AU0106100R	900 mm	127,00
7		**AU0106200R**	700 mm	-
		AU0106300R	900 mm	502,00
8		**AU0014100R**		44,90

Acabados lavabos:
Washbasins finishes:
Producto Acabado
Product Finish
62B Blanco mate / Matt white
08B Negro mate / Matt Black

Producto acabado compatible:
Compatible finished products:

			€
9	**A857829...**	700 mm	-
	A857830...	900 mm	-
10	**A327279...**		-
11	**A327276...**		-
12	**A327274...**		-
13	**A857827557**	700 mm	-
	A857828557	900 mm	-

Terra

Lavabo Terra cerámico redondo / Round Terra ceramic washbasin

A32787U..0	Ø 300 mm
A32787N000	Ø 390 mm

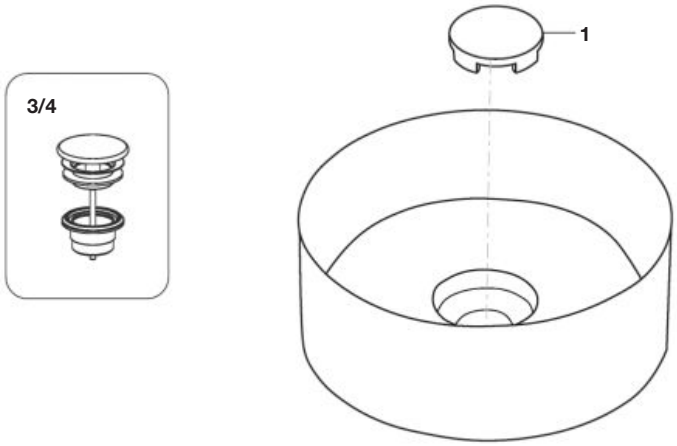

Lavabo Terra cerámico cuadrado / Square Terra ceramic washbasin

A32787Y..0	400 x 400 mm
A32787Z..0	510 X 360 mm

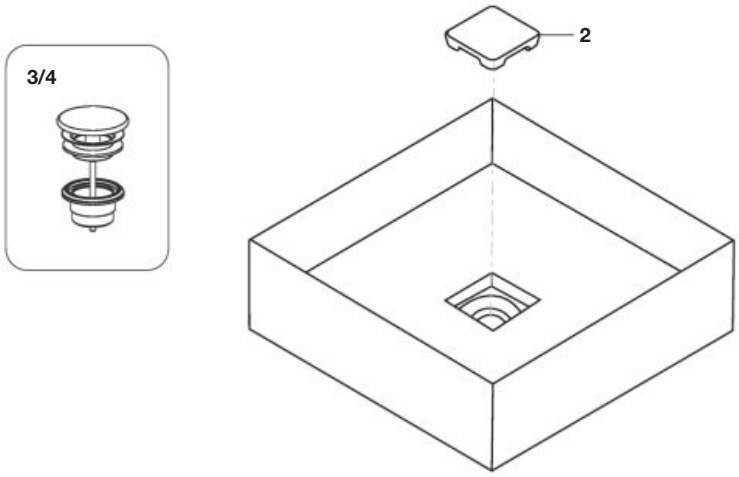

Las últimas posiciones de cada código indican el acabado (color):
The lasts positions indicates the finish (colour):

Producto Product	**Recambio** Spare Part	**Acabado** Finish
00	00	**Blanco /** White
08	08	**Negro Mate /** Matt Black
62	62	**Blanco Mate /** Matt White

			€
1	**AV00701..R**		-
2	**AV00702..R**		-

Producto acabado compatible:
Compatible finished products:

			€
3	**A5064039..**	Open fitting	-
4	**AG0075200R**	Automatic	-

Element

Lavabo de sobre encimera / Countertop basin

A327570000

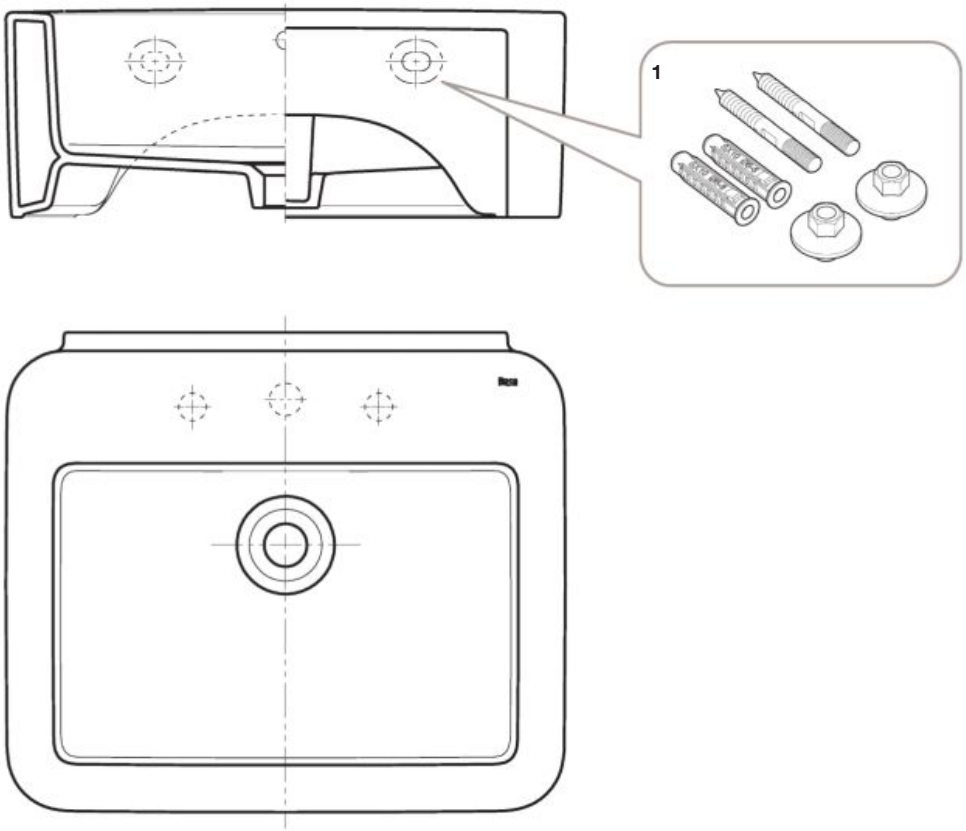

		€
1	**AV0007500R**	5,51

Stratum-N

Mueble base de un cajón / One drawer vanity unit with washbasin

UNIK: MUEBLE BASE 1 CAJÓN Y LAVABO STRATUM-N Unik: base unit and sink Stratum-N	
A851067...	900 mm
A851068...	1100 mm

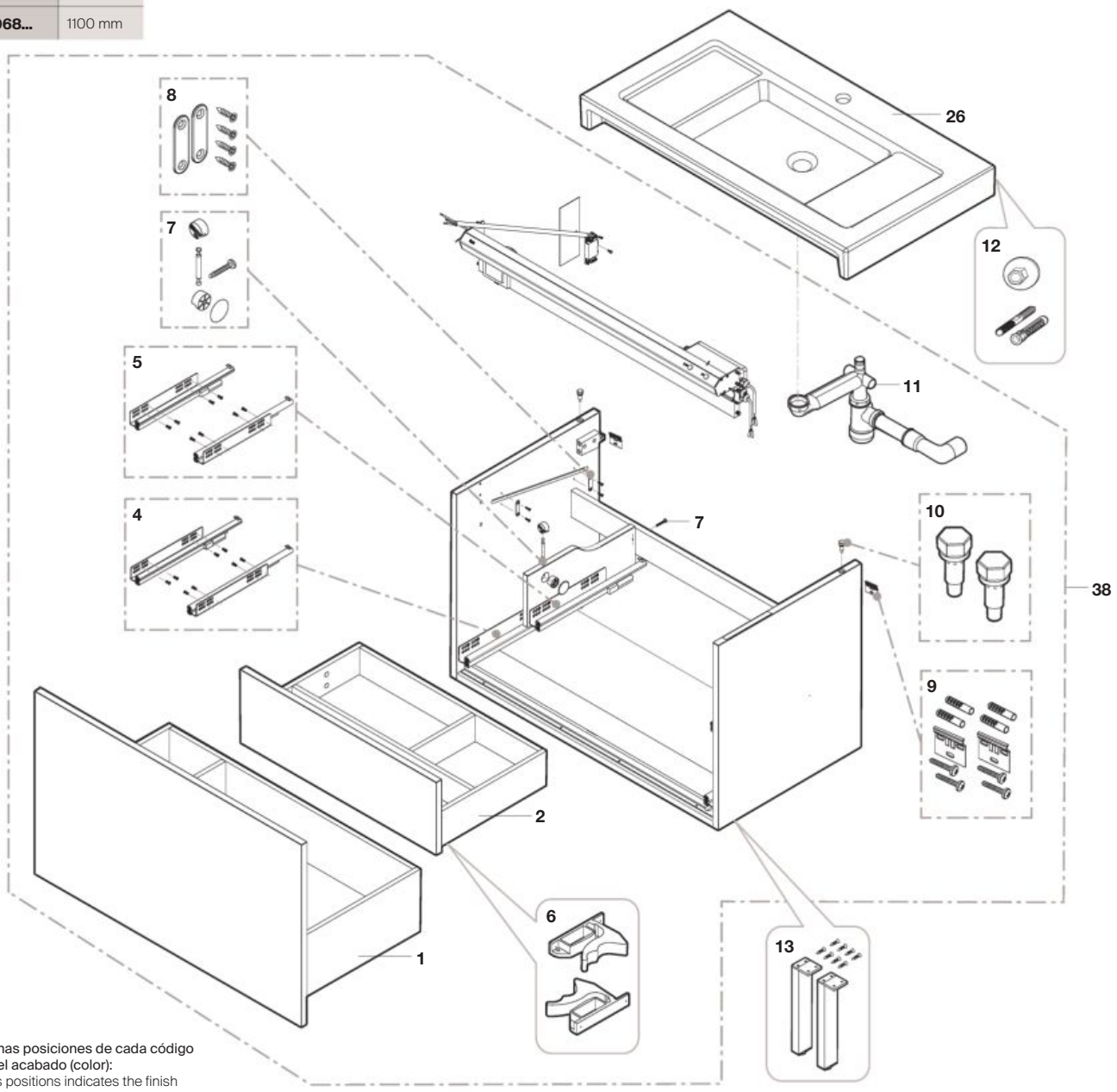

Las últimas posiciones de cada código indican el acabado (color):
The lasts positions indicates the finish (colour):

Producto Product	**Recambio** Spare Part	**Acabado** Finish
806	**WH**	Blanco / White
396	**YO**	Yosemite

				€
1	**AU00403WHR**	900mm		N.D.
	AU00403YOR			N.D.
	AU00405WHR	1100mm		N.D.
	AU00405YOR			N.D.
2	**AU00404WHR**	900mm		N.D.
	AU00404YOR			N.D.
	AU00406WHR	1100mm		203,00
	AU00406YOR			N.D.
4	**AU0024400R**	400 mm		63,50

				€
5	**AU0017600R**	350 mm		54,30
6	**AU0017300R**			4,68
7	**AU0041100R**			15,00
8	**AU0041200R**			13,80
9	**AU0013300R**			15,80
10	**AU0041300R**			12,90
11	**AU0014100R**			44,90
12	2 un **AV0007500R**			5,51

Producto acabado compatible:
Compatible finished products:

			€
13	**A816811336**		-
26	**A327632000**	900 mm	-
	A327631000	1100 mm	-
38	**A857061806**	900 mm	-
	A857061396		-
	A857062806	1100 mm	-
	A857062396		-

Stratum-N

Mueble base de dos cajones con lavabo / Two drawers vanity unit with washbasin

UNIK: MUEBLE BASE 2 CAJONES Y LAVABO STRATUM-N 2 drawers base unit and washbasin	
A851069...	1300 mm

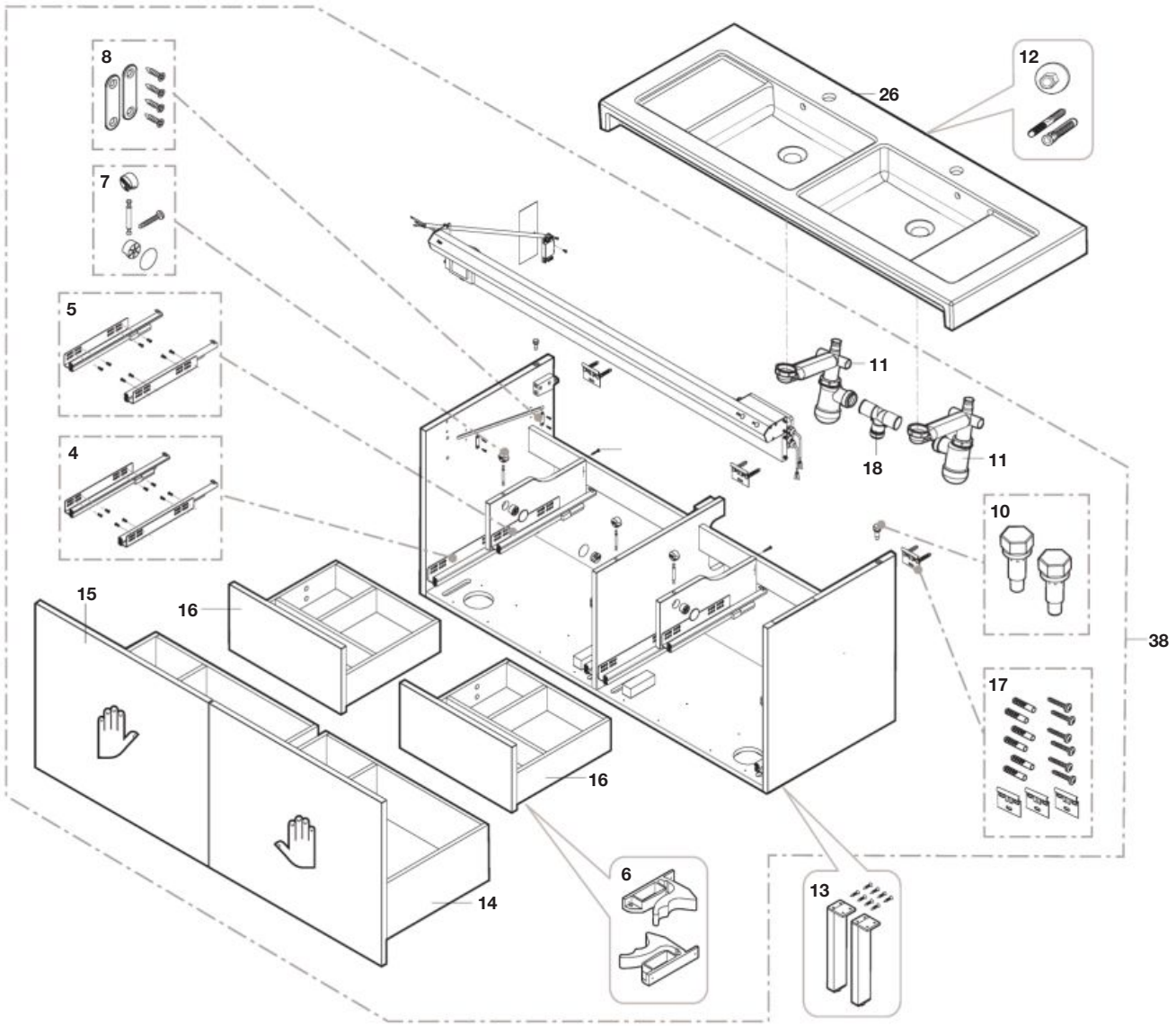

Las últimas posiciones de cada código indican el acabado (color):
The lasts positions indicates the finish (colour):

Producto Product	**Recambio** Spare Part	Acabado Finish
806	**WH**	Blanco / White
396	**YO**	Yosemite

				€
4		**AU0024400R**	400 mm	63,50
5		**AU0017600R**	350 mm	54,30
6		**AU0017300R**		4,68
7		**AU0041100R**		15,00
8		**AU0041200R**		13,80
10		**AU0041300R**		12,90
11		**AU0014100R**		44,90
12	2 un	**AV0007500R**		5,51

				€
14		**AU00407WHR**	1300 mm	N.D.
		AU00407YOR		N.D.
15		**AU00408WHR**	1300 mm	N.D.
		AU00408YOR		N.D.
16		**AU00409WHR**	1300 mm	N.D.
		AU00409YOR		N.D.
17		**AU0041300R**		12,90
18		**AU0020800R**		7,68

Producto acabado compatible:
Compatible finished products:

			€
13	**A816811336**		-
26	**A327630000**	1300 mm	-
38	**A857063...**	1300 mm	-

Stratum-N

Mueble base de un cajón con lavabo (electrónico) / One drawer vanity unit with washbasin (electronic)

UNIK: MUEBLE BASE 1 CAJÓN Y LAVABO STRATUM-N 1 drawer base unit and washbasin	
A851067...	900 mm
A851068...	1100 mm
A851069...	1300 mm

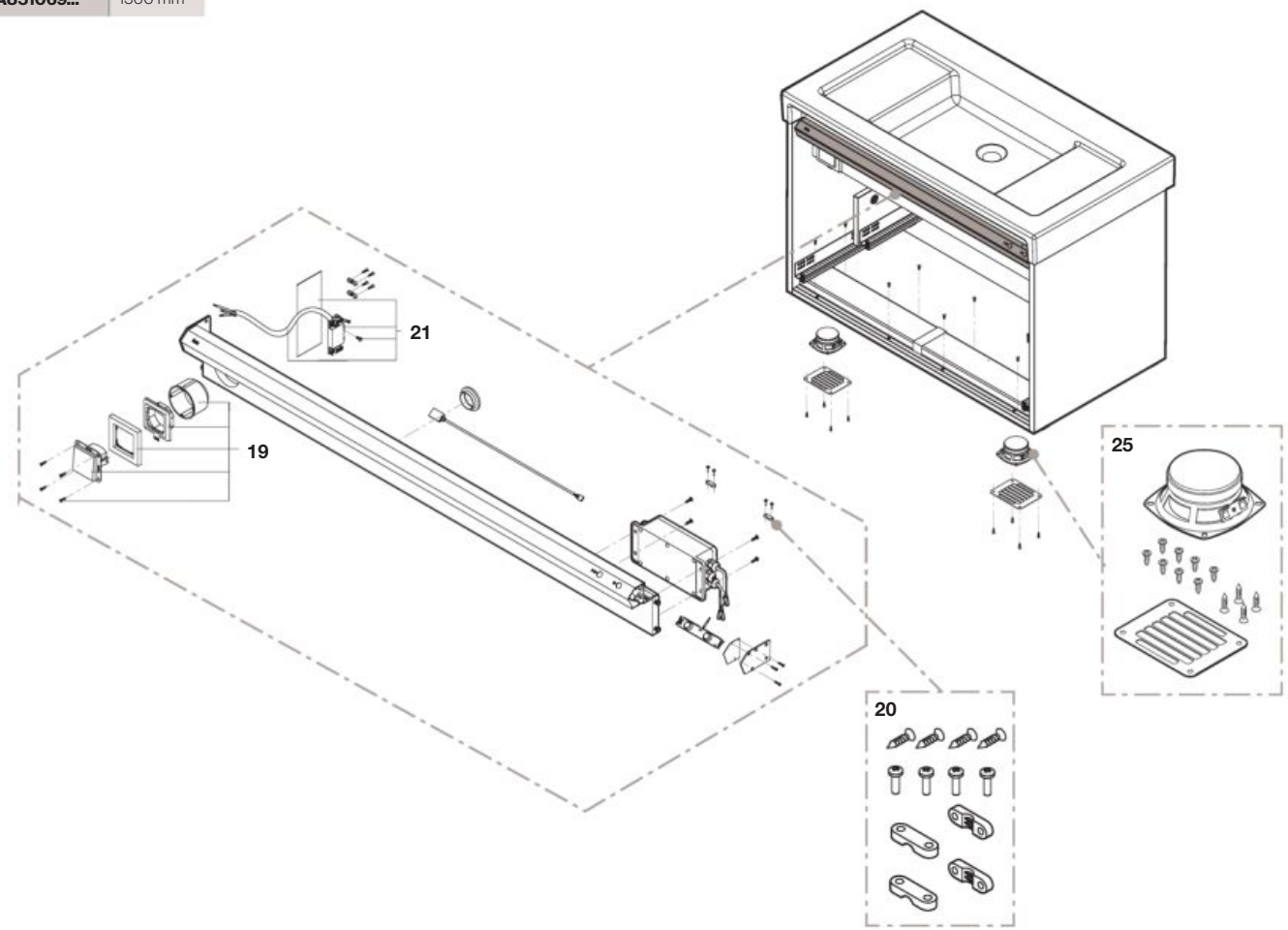

Las últimas posiciones de cada código indican el acabado (color):
The lasts positions indicates the finish (colour):

Producto Product	**Recambio** Spare Part	Acabado Finish
806	**WH**	Blanco / White
396	**YO**	Yosemite

		€
19	**AU0041600R**	115,00
20	**AU0041700R**	2,78
21	**AU0041800R**	40,30
25	**AU0041000R**	59,30

Stratum-N

Columna de una puerta con espejo / One door mirrored column

A856989...	1400 mm

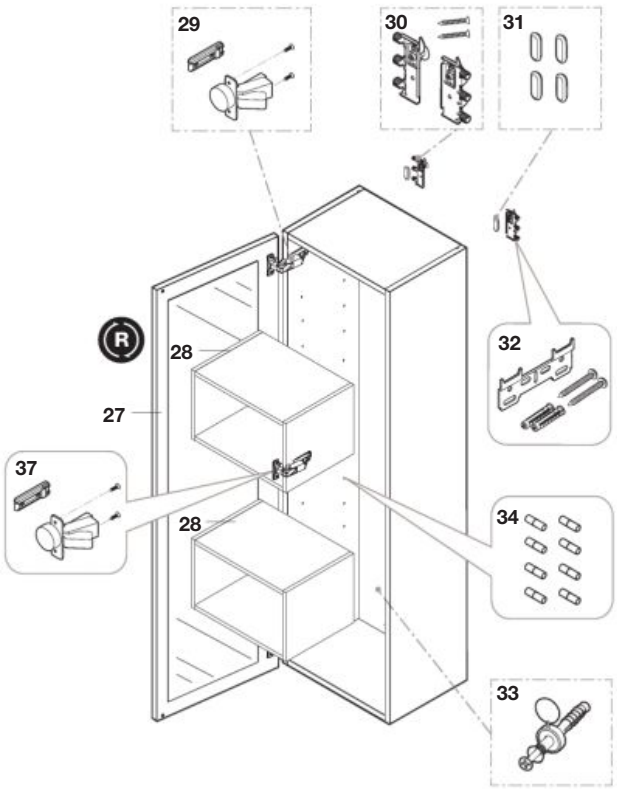

Espejos / Mirrors

ESPEJO PRISMA CONFORT/ PRISMA CONFORT MIRROR	
A812268000	1200 x 800 mm
A812267000	1100 x 800 mm
A812266000	1000 x 800 mm
A812265000	900 x 800 mm
A812264000	800 x 800 mm
A812263000	600 x 800 mm

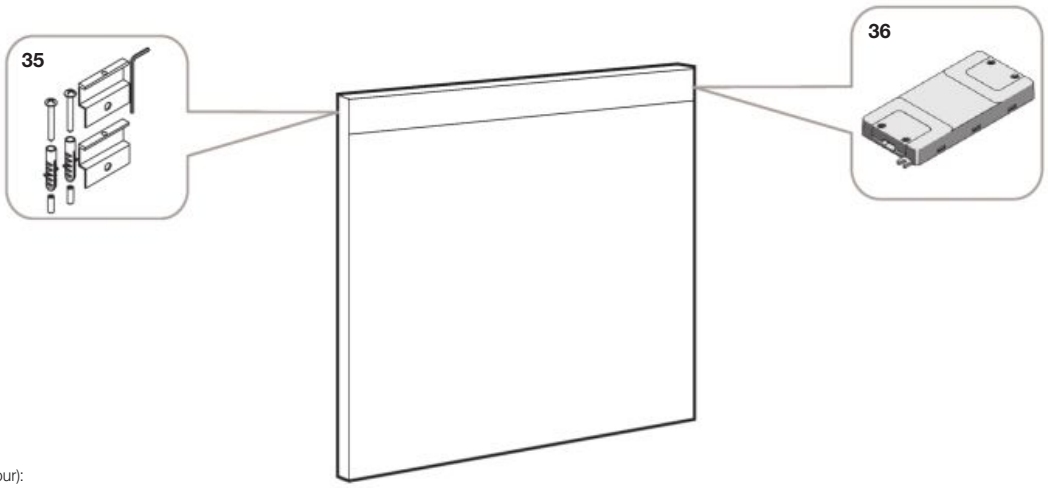

Las últimas posiciones de cada código indican el acabado (color):
The lasts positions indicates the finish (colour):

Producto Product	**Recambio** Spare Part	Acabado Finish
806	**WH**	Blanco / White
396	**YO**	Yosemite

				€
27		**AU00426WHR**		N.D.
		AU00426YOR		N.D.
28		**AU0042500R**		110,00
29	2 un	**AU0042700R**		25,80

				€
30		**AU0013700R**		16,30
31				
32		**AU0013800R**		12,10
33				
34	4 un	**AU0042800R**		28,30

				€
35		**AU0023700R**		3,50
36		**AU0023600R**		25,80
37	1 un	**AU0043200R**	amortiguada / cushioned	30,70

Prisma

Mueble base de un cajón y lavabo / One drawer vanity unit with washbasin

UNIK: BASE 1 CAJÓN + LAVABO 1 drawer base unit + wash-basin	
A855945...	800 mm
A855944...	600 mm

PACK: UNIK + ESPEJO LED PRISMA BASIC Unik + LED Mirror Prisma Basic	
A855929...	800 mm
A855928...	600 mm

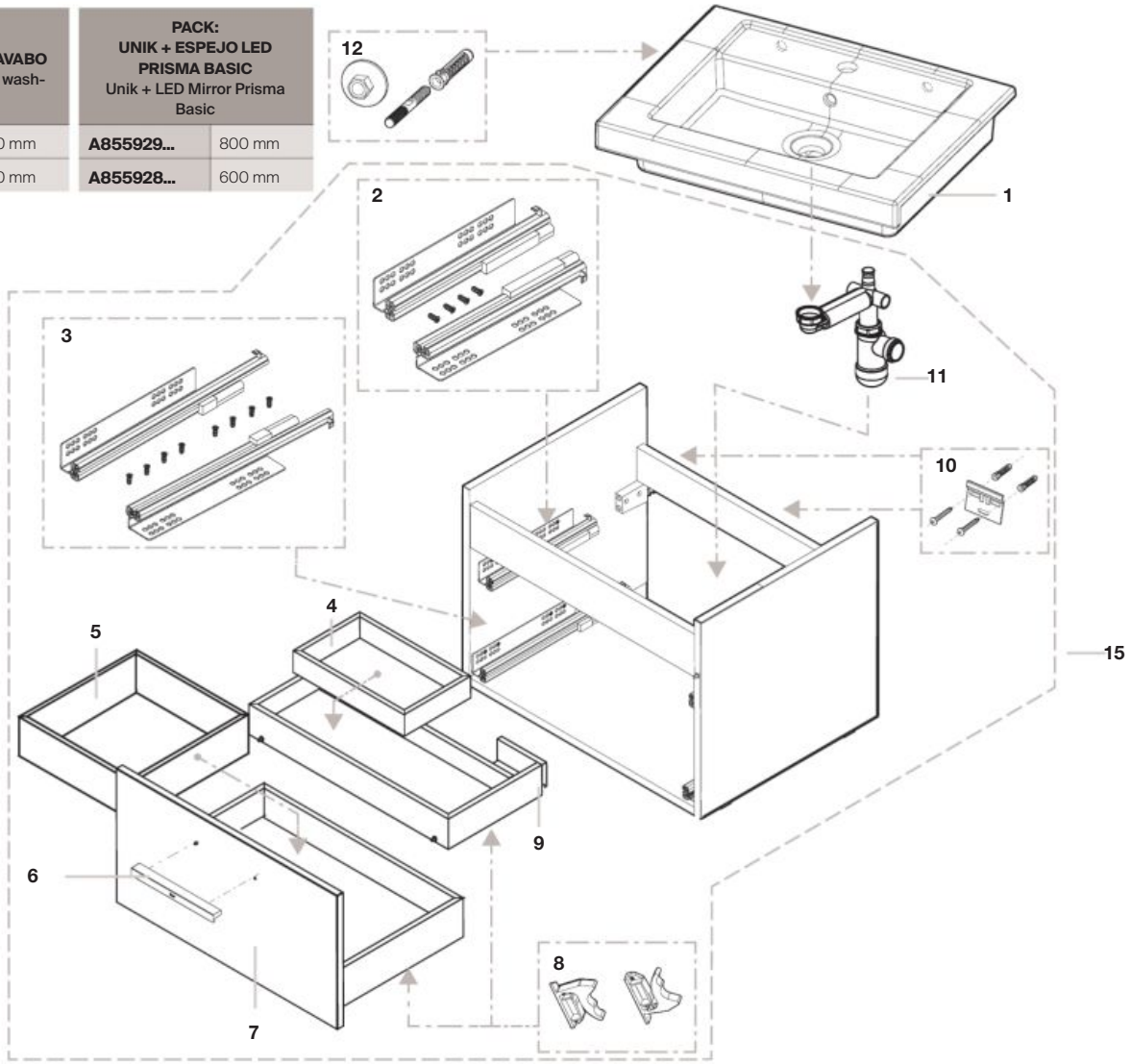

Las últimas posiciones de cada código indican el acabado (color):
The lasts positions indicates the finish (colour):

Producto Product	Recambio Spare Part	Acabado Finish
806	WH	Blanco brillo / Glossy white
153	GA	Gris antracita / Anthracite grey
321	AS	Fresno / Ash
322		Combinación frontal blanco y lateral fresno White frontal and ash side combination

				€
2		**AU0017700R**		29,70
3		**AU0017600R**		54,30
4		**AU0017900R**	270 x 162	11,60
5		**AU0017800R**	324 x 300	18,00
6	2 un	**AU0017500R**		52,30
7		**AU00174ASR**		48,30
		AU00174GAR	600 mm	101,00
		AU00174WHR		89,80
		AU00180ASR		57,50
		AU00180GAR	800 mm	126,00
		AU00180WHR		107,00
8		**AU0017300R**		4,68
9		**AU0017200R**	600 mm	25,50
		AU0018100R	800 mm	20,00
10	2 un	**AU0013300R**		15,80
11		**AU0014100R**		44,90
12	2 un	**AV0007500R**		5,51

ADMITE (no incluido) / ADMITS (not included)

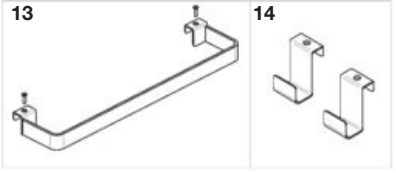

Producto acabado compatible:
Compatible finished products:

			€
1	**A327546000**	600 mm	-
	A327545000	800 mm	-
13	**A816760001**		-
14	**A816761001**		-
15	**A856875...**	600 mm	-
	A856876...	800 mm	-

Prisma

Mueble base de un cajón con lavabo (derecho e izquierdo) / One drawer vanity unit with washbasin (right and left hand)

UNIK: BASE 1 CAJÓN + LAVABO 1 drawer base unit + washbasin		
A855948...		1100 mm
A855949...		
A855946...		900 mm
A855947...		

PACK: UNIK + ESPEJO LED PRISMA BASIC Unik + LED mirror Prisma basic		
A855932...		1100 mm
A855933...		
A855930...		900 mm
A855931...		

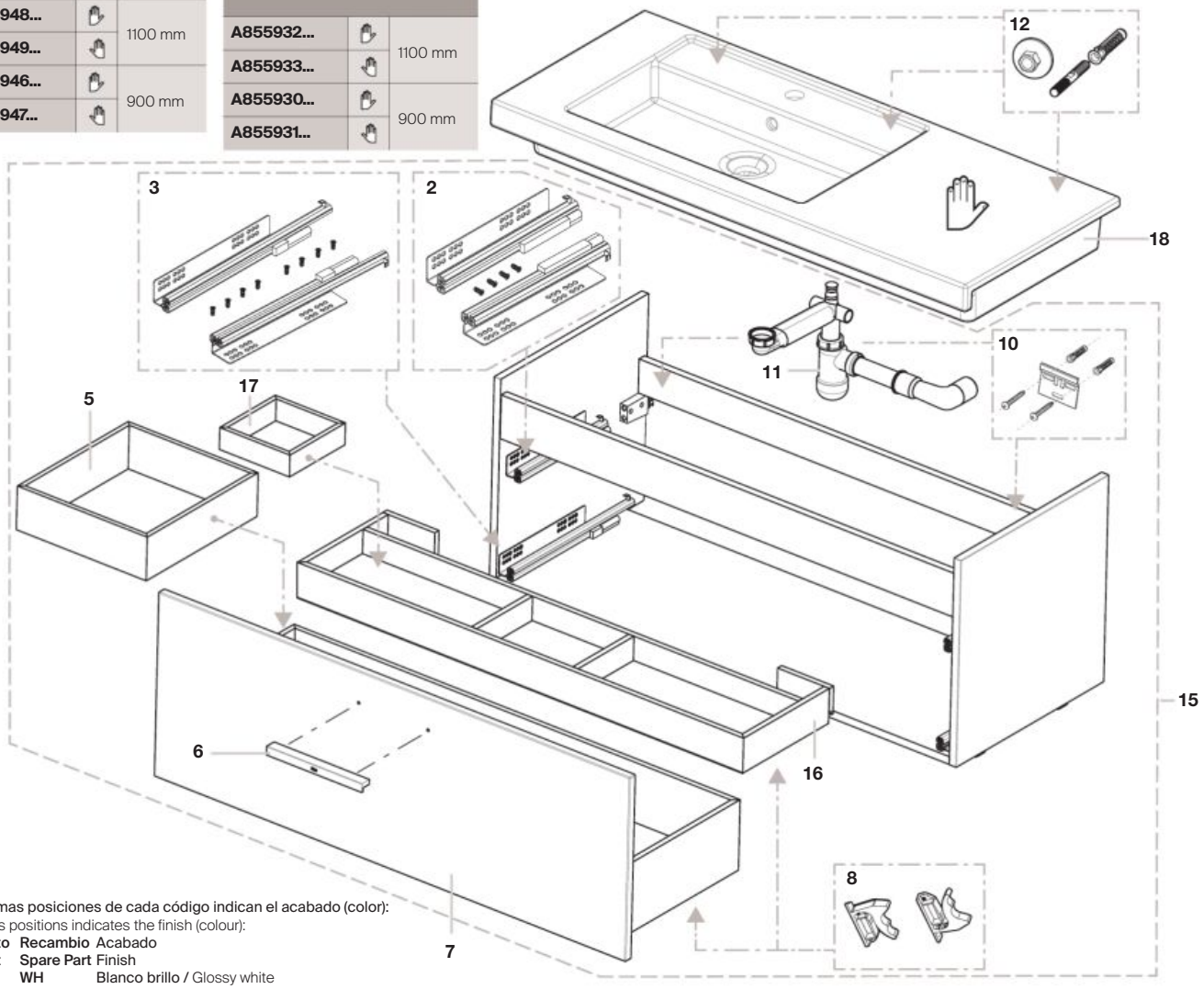

Las últimas posiciones de cada código indican el acabado (color):
The lasts positions indicates the finish (colour):

Producto Product	Recambio Spare Part	Acabado Finish
806	WH	Blanco brillo / Glossy white
153	GA	Gris antracita / Anthracite grey
321	AS	Fresno / Ash
322		Combinación frontal blanco y lateral fresno White frontal and ash side combination

				€
2		**AU0017700R**		29,70
3		**AU0017600R**		54,30
5		**AU0017800R**	324 x 300	18,00
6	2 un	**AU0017500R**		52,30
7		**AU00182ASR**		63,70
		AU00182GAR	900 mm	141,00
		AU00182WHR		122,00
		AU00184ASR		72,20
		AU00184GAR	1100 mm	170,00
		AU00184WHR		128,00
8		**AU0017300R**		4,68
10	2 un	**AU0013300R**		15,80
11		**AU0014100R**		44,90
12	2 un	**AV0007500R**		5,51
16		**AU0018300R**	900 mm	34,80
		AU0018500R	1100 mm	28,80
17		**AU0019400R**	162 x 162	11,30

ADMITE (no incluido) / ADMITS (not included)

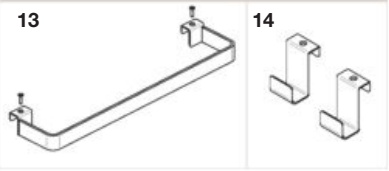

Producto acabado compatible:
Compatible finished products:

			€
13	**A816760001**		-
14	**A816761001**		-
15	**A856877...**	900 mm	-
	A856878...	1100 mm	-
18	**A327544000**	900 mm	-
	A327543000	900 mm	-
	A327542000	1100 mm	-
	A327541000	1100 mm	-

Prisma

Mueble base de dos cajones y lavabo doble / Two drawers vanity unit with double washbasin

UNIK: BASE 2 CAJONES + LAVABO DOBLE 2 drawers base unit + 2 basins	
A855950...	1200 mm

PACK: UNIK + ESPEJO LED PRISMA BASIC Unik + LED mirror Prisma Basic	
A855934...	1200 mm

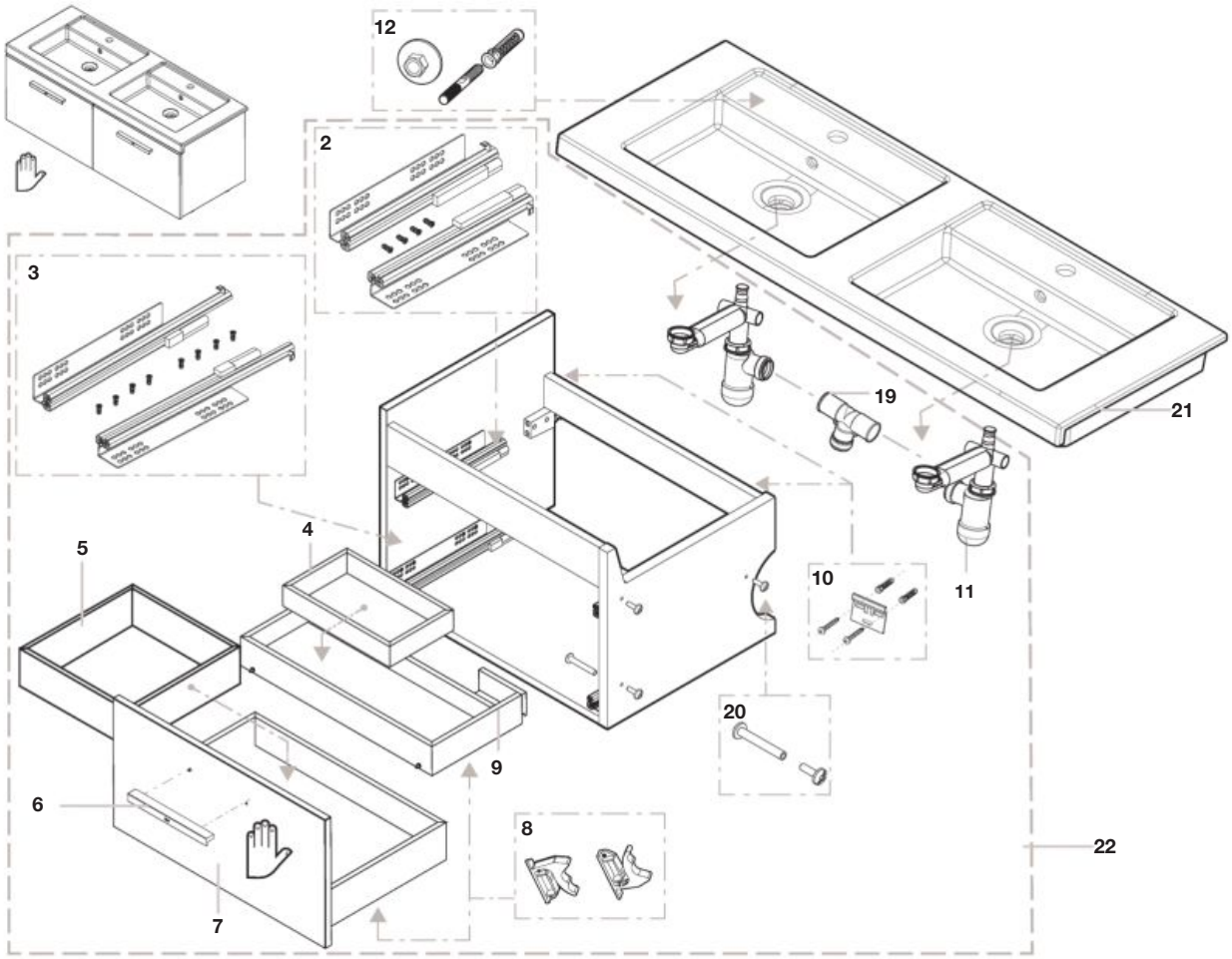

Las últimas posiciones de cada código indican el acabado (color):
The lasts positions indicates the finish (colour):

Producto Product	Recambio Spare Part	Acabado Finish
806	**WH**	Blanco brillo / Glossy white
153	**GA**	Gris antracita / Anthracite grey
321	**AS**	Fresno / Ash
322		Combinación frontal blanco y lateral fresno White frontal and ash side combination

				€
2		**AU0017700R**		29,70
3		**AU0017600R**		54,30
4		**AU0017900R**	270 x 162	11,60
5		**AU0017800R**	324 x 300	18,00
6	2 un	**AU0017500R**		52,30
7		**AU00174ASR**	600 mm	48,30
		AU00174GAR		101,00
		AU00174WHR		89,80
8		**AU0017300R**		4,68
9		**AU0017200R**	600 mm	25,50
10	2 un	**AU0013300R**		15,80
11		**AU0014100R**		44,90
12	2 un	**AV0007500R**		5,51
19		**AU0020800R**		7,68
20	3 un	**AU0018600R**		14,70

ADMITE (no incluido) / ADMITS (not included)

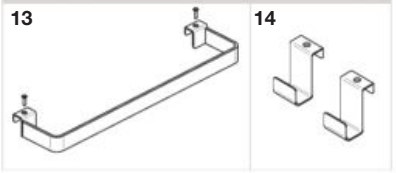

Producto acabado compatible:
Compatible finished products:

			€
13	**A816760001**		-
14	**A816761001**		-
21	**A327540000**	1200 mm	-
22	**A856879...**	600 mm	-
	A856880...	600 mm	-

Prisma

Mueble base de dos cajones y lavabo / Two drawers vanity unit with washbasin

UNIK: BASE 2 CAJONES + LAVABO Vanity 2 drawers and basin	
A855952...	800 mm
A855951...	600 mm

PACK: UNIK + ESPEJO LED PRISMA BASIC Unik + LED mirror prisma basic	
A855936...	800 mm
A855935...	600 mm

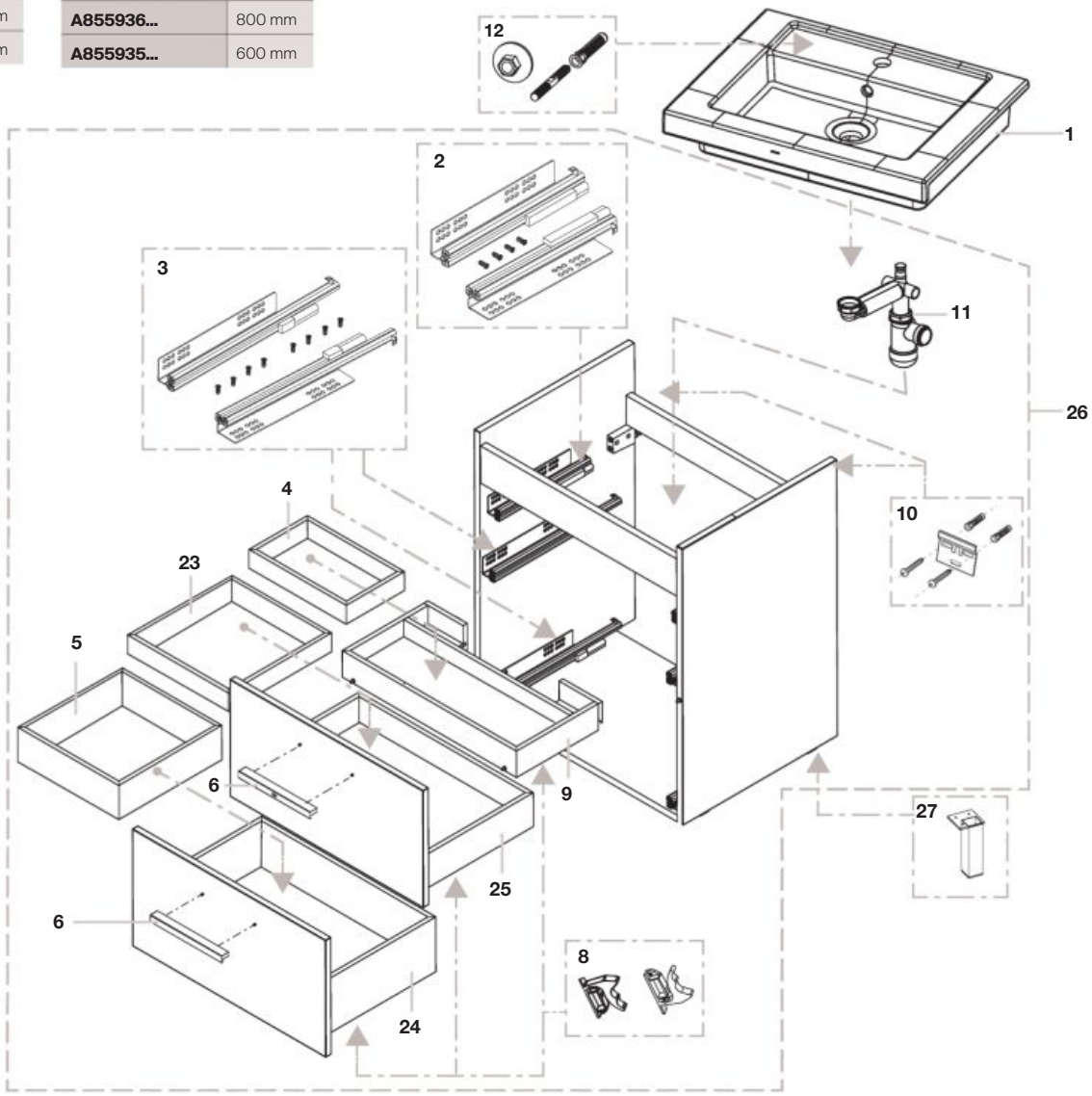

Las últimas posiciones de cada código indican el acabado (color):
The lasts positions indicates the finish (colour):

Producto Product	**Recambio** Spare Part	**Acabado** Finish
806	**WH**	Blanco brillo / Glossy white
153	**GA**	Gris antracita / Anthracite grey
321	**AS**	Fresno / Ash
322		Combinación frontal blanco y lateral fresno White frontal and ash side combination

				€
2		**AU0017700R**		29,70
3		**AU0017600R**		54,30
4		**AU0017900R**	270 x 162	11,60
5		**AU0017800R**	324 x 300	18,00
6	2 un	**AU0017500R**		52,30
8		**AU0017300R**		4,68
9		**AU0017200R**	600 mm	25,50
		AU0018100R	800 mm	20,00
10	2 un	**AU0013300R**		15,80
11		**AU0014100R**		44,90
12	2 un	**AV0007500R**		5,51
23		**AU0018900R**	270 x 324	30,00

				€
24		**AU00187ASR**		45,70
		AU00187GAR	600 mm	95,50
		AU00187WHR		82,30
		AU00190ASR		54,00
		AU00190GAR	800 mm	123,00
		AU00190WHR		104,00
25		**AU00188ASR**		42,30
		AU00188GAR	600 mm	92,50
		AU00188WHR		78,70
		AU00191ASR		60,00
		AU00191GAR	800 mm	119,00
		AU00191WHR		119,00

ADMITE (no incluido) / ADMITS (not included)

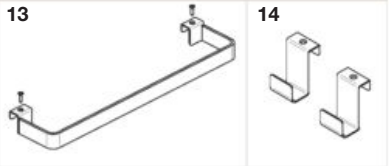

Producto acabado compatible:
Compatible finished products:

				€
1		**A327546000**	600 mm	-
		A327545000	800 mm	-
13		**A816760001**		-
14		**A816761001**		-
26		**A856881...**	600 mm	-
		A856882...	800 mm	-
27	2 un	**A816764339**		-

Prisma

Mueble base de dos cajones con lavabo (derecho e izquierdo) / Two drawers vanity unit with washbasin (right and left hand)

UNIK: BASE 2 CAJONES + LAVABO Vanity 2 drawers and basin		
A855955...		1100 mm
A855956...		
A855953...		900 mm
A855954...		

PACK: UNIK + ESPEJO LED PRISMA BASIC Unik + LED mirror Prisma basic		
A855939...		1100 mm
A855940...		
A855937...		900 mm
A855938...		

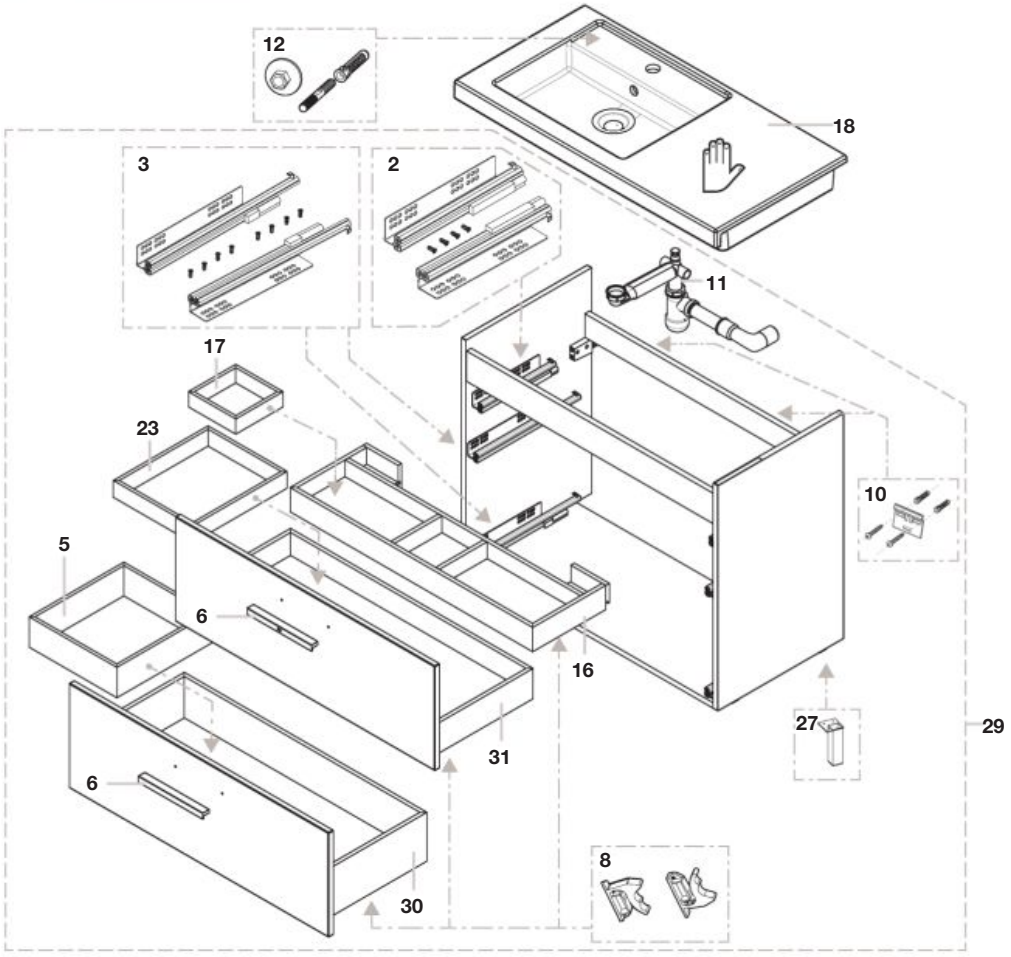

Las últimas posiciones de cada código indican el acabado (color):
The lasts positions indicates the finish (colour):

Producto Product	Recambio Spare Part	Acabado Finish
806	WH	Blanco brillo / Glossy white
153	GA	Gris antracita / Anthracite grey
321	AS	Fresno / Ash
322		Combinación frontal blanco y lateral fresno White frontal and ash side combination

ADMITE (no incluido) / ADMITS (not included)

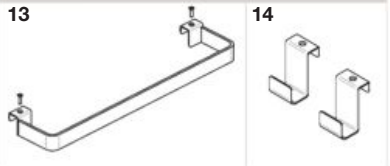

				€
2		**AU0017700R**		29,70
3		**AU0017600R**		54,30
5		**AU0017800R**	324 x 300	18,00
6	2 un	**AU0017500R**		52,30
8		**AU0017300R**		4,68
10	2 un	**AU0013300R**		15,80
11		**AU0014100R**		44,90
12	2 un	**AV0007500R**		5,51
16		**AU0018300R**	900 mm	34,80
		AU0018500R	1100 mm	28,80
17		**AU0019400R**	162 x 162	11,30
23		**AU0018900R**	270 x 324	30,00

				€
30		**AU00192ASR**		59,70
		AU00192GAR	900 mm	140,00
		AU00192WHR		107,00
		AU00195ASR		59,00
		AU00195GAR	1100 mm	164,00
		AU00195WHR		137,00
31		**AU00193ASR**		55,70
		AU00193GAR	900 mm	135,00
		AU00193WHR		102,00
		AU00196ASR		58,80
		AU00196GAR	1100 mm	159,00
		AU00196WHR		120,00

Producto acabado compatible:
Compatible finished products:

				€
13		**A816760001**		-
14		**A816761001**		-
18		**A327544000**	900 mm	-
		A327543000	900 mm	-
		A327542000	1100 mm	-
		A327541000	1100 mm	-
27	2 un	**A816764339**		-
29		**A856883...**	900 mm	-
		A856884...	1100 mm	-

Prisma

Mueble base de cuatro cajones con lavabo (derecho e izquierdo) / Four drawers vanity unit with washbasin (right and left hand)

UNIK: BASE 4 CAJONES + LAVABO DOBLE Vanity 4 drawers and 2 washbasins	
A855957...	1200 mm

PACK: UNIK + ESPEJO LED PRISMA BASIC Unik + LED mirror Prisma basic	
A855941...	1200 mm

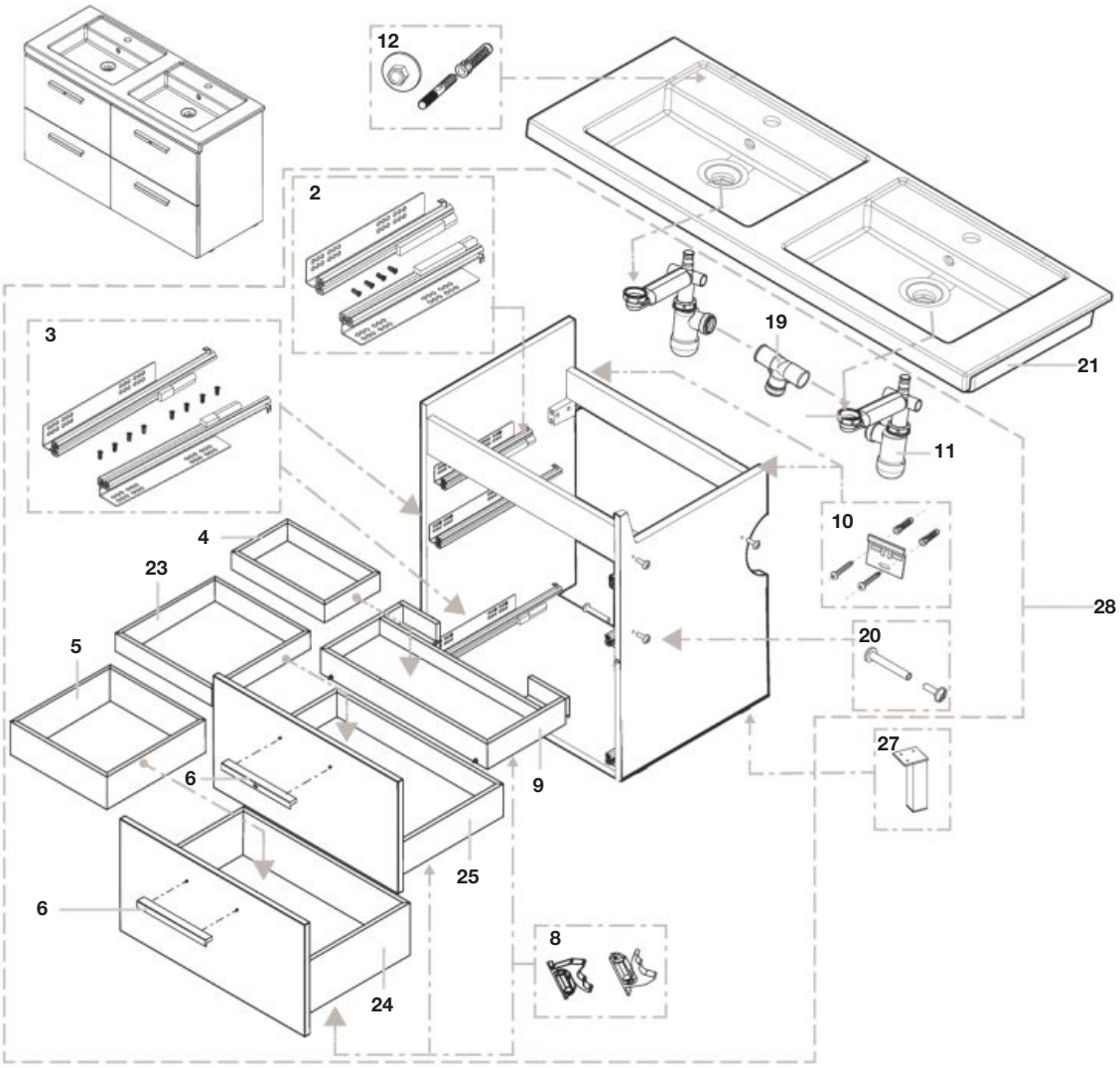

Las últimas posiciones de cada código indican el acabado (color):
The lasts positions indicates the finish (colour):

Producto Product	**Recambio** Spare Part	**Acabado** Finish
806	**WH**	Blanco brillo / Glossy white
153	**GA**	Gris antracita / Anthracite grey
321	**AS**	Fresno / Ash
322		Combinación frontal blanco y lateral fresno White frontal and ash side combination

				€
2		**AU0017700R**		29,70
3		**AU0017600R**		54,30
4		**AU0017900R**	270 x 162	11,60
5		**AU0017800R**	324 x 300	18,00
6	2 un	**AU0017500R**		52,30
8		**AU0017300R**		4,68
9		**AU0017200R**	600 mm	25,50
10	2 un	**AU0013300R**		15,80
11		**AU0014100R**		44,90
12	2 un	**AV0007500R**		5,51

				€
19		**AU0020800R**		7,68
20	3 un	**AU0018600R**		14,70
23		**AU0018900R**	270 x 324	30,00
24		**AU00187ASR**	600 mm	45,70
		AU00187GAR		95,50
		AU00187WHR		82,30
25		**AU00188ASR**	600 mm	42,30
		AU00188GAR		92,50
		AU00188WHR		78,70

ADMITE (no incluido) / ADMITS (not included)

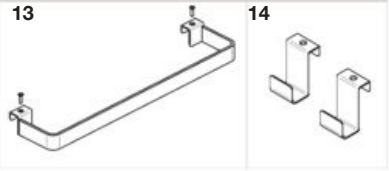

Producto acabado compatible:
Compatible finished products:

				€
13		**A816760001**		-
14		**A816761001**		-
21		**A327540000**	1200 mm	-
27	2 un	**A816764339**		-
28		**A856885806**	600 mm	-
		A856886806	600 mm	-

Prisma

Columna de una puerta / One door column

A856887...	1200 mm

Las últimas posiciones de cada código indican el acabado (color):
The lasts positions indicates the finish (colour):

Producto Product	Recambio Spare Part	Acabado Finish
806	**WH**	Blanco brillo / Glossy white
153	**GA**	Gris antracita / Anthracite grey
321	**AS**	Fresno / Ash
322		Combinación frontal blanco y lateral fresno White frontal and ash side combination

			€
6	2 un	**AU0017500R**	52,30
32		**AU0013800R**	12,10
33			
34		**AU0013700R**	16,30
35	4 un		
35	4 un	**AU0013700R**	16,30
36		**AU00198ASR**	13,60
		AU00198GAR	13,00
		AU00198WHR	11,20
37		**AU00197ASR**	41,70
		AU00197GAR	129,00
		AU00197WHR	105,00
38		**AU0019900R**	10,60
39	8 un	**AU0020000R**	15,00
40		**AU0020100R**	2,62

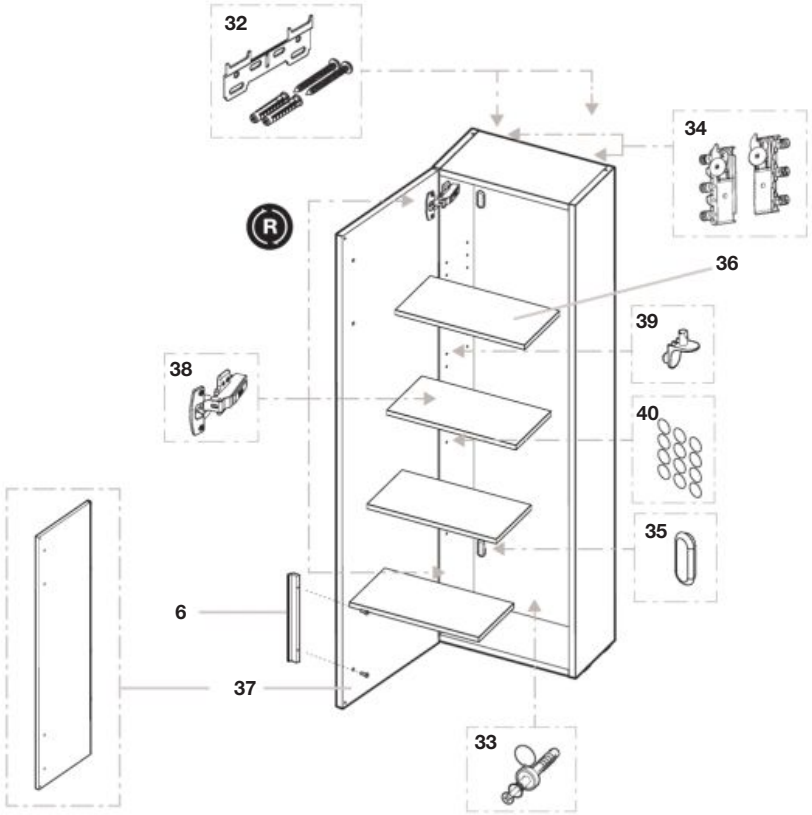

Estructura de acero inoxidable / Stainless steel structure

A856746001	600 mm
A856747001	800 mm
A856748001	900 mm
A856749001	1100 mm
A856750001	1200 mm

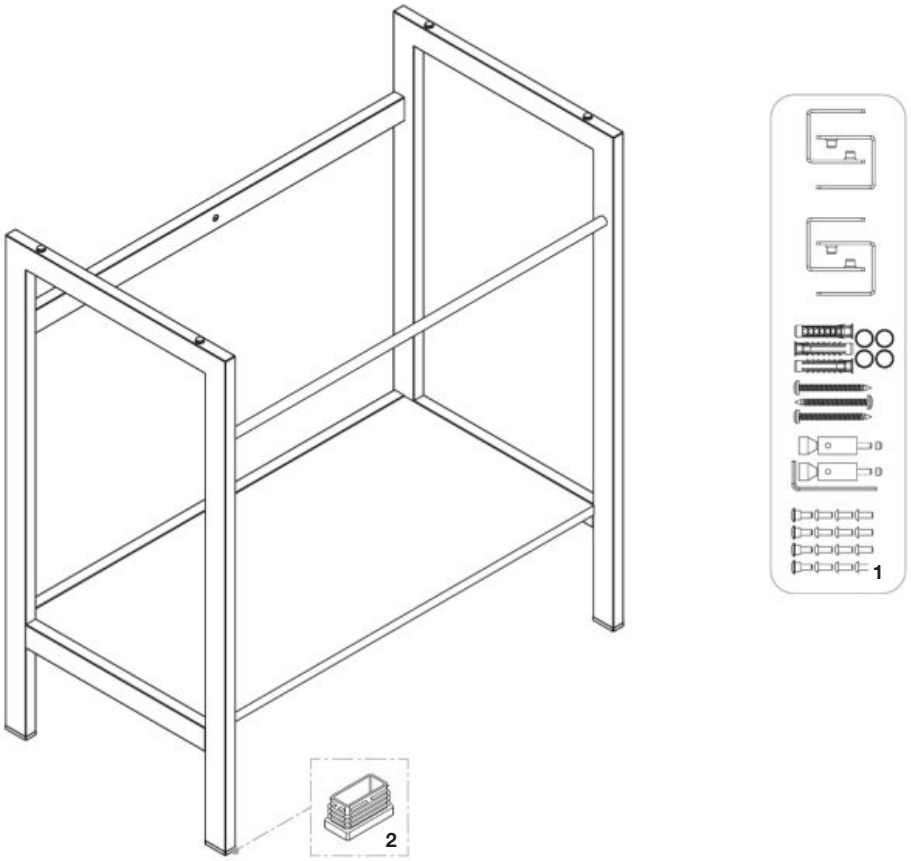

			€
1		**AU0045000R**	102,00
2	4 un	**AU0051300R**	2,47

Natura

Lavabo + mueble de baño / Washbasin + bath furniture

UNIK: **ESTRUCTURA NATURA CON ESTANTERÍA** Structure Natura with shelf	
A851055392	650 mm
A851056392	850 mm

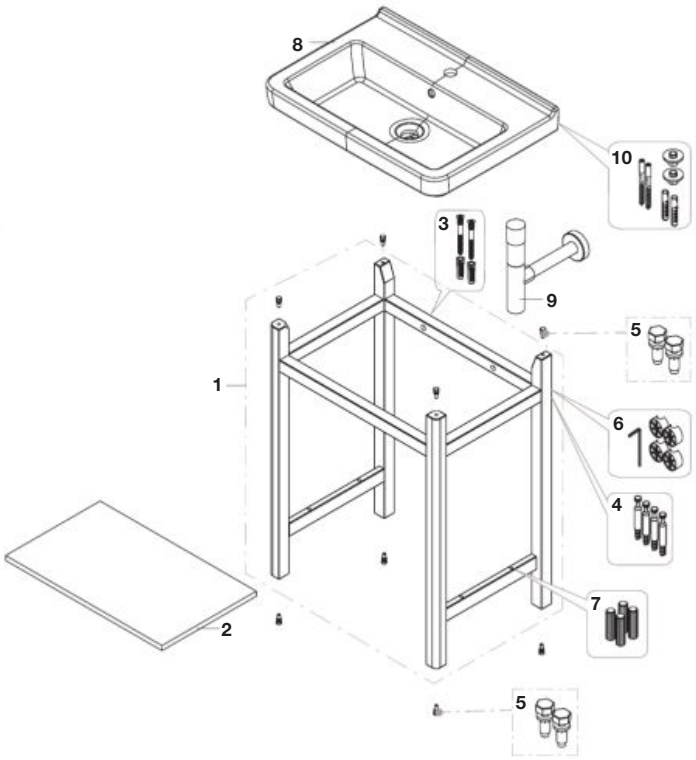

Columna / Column

UNIK: **COLUMNA NATURA CON PUERTA Y ESTANTERÍAS** Column Natura with door and shelfs	
A851074392	1850 mm

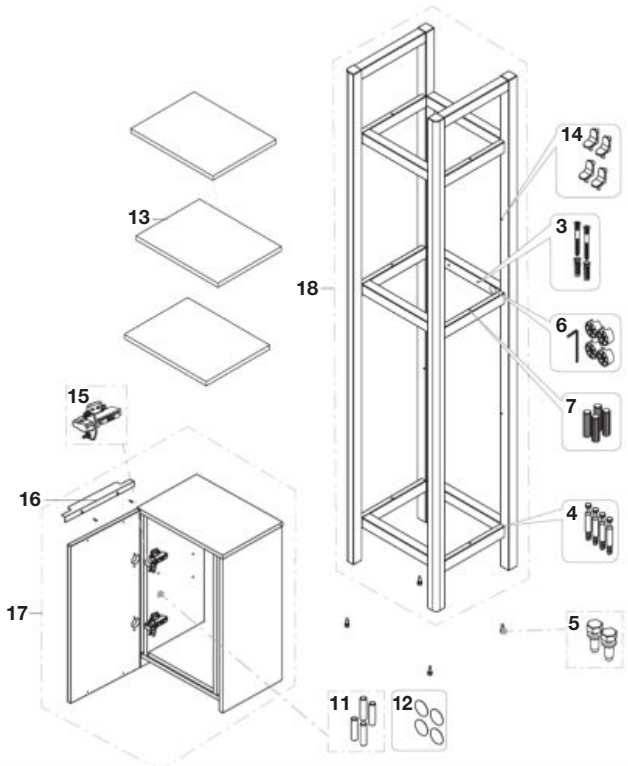

			€
3 4	**AU0062800R**		13,40
5	**AU0041300R**		12,90
6 7	**AU0062900R**		-
10	**AV0007500R**		5,51

			€
11 12	**AU0063700R**		-
13 14	**AU0063600R**		-
15	2un	**AU0063500R**	-
16		**AU0062700R**	23,00

Producto acabado compatible:
Compatible finished products:

			€
1	**A856975387**	650 mm	-
	A856976387	850 mm	-
2	**A856981300**	650 mm	-
	A856982300	850 mm	-
8	**A327783000**	650 mm	-
	A327781000	850 mm	-
9	**A506403110**		-
17	**A856991373**		-
18	**A856990387**	1850 mm	-

Lander

Mueble base de dos cajones con lavabo y zócalo / Two drawers vanity unit and inner drawer with washbasin

UNIK: MUEBLE BASE 2 CAJONES Y CAJÓN INTERIOR + LAVABO Two drawers base with inner drawer unit and washbasin	
A851424...	600 mm
A851425...	800 mm
A851426...	1000 mm 1TH
A851427...	1000 mm LH
A851428...	1000 mm RH

PACK: UNIK MUEBLE 2 CAJONES Y CAJÓN INTERIOR + ESPEJO Two drawers base with inner drawer unit and mirror	
A851429...	600 mm
A851430...	800 mm
A851431...	1000 mm 1TH
A851432...	1000 mm LH
A851433...	1000 mm RH

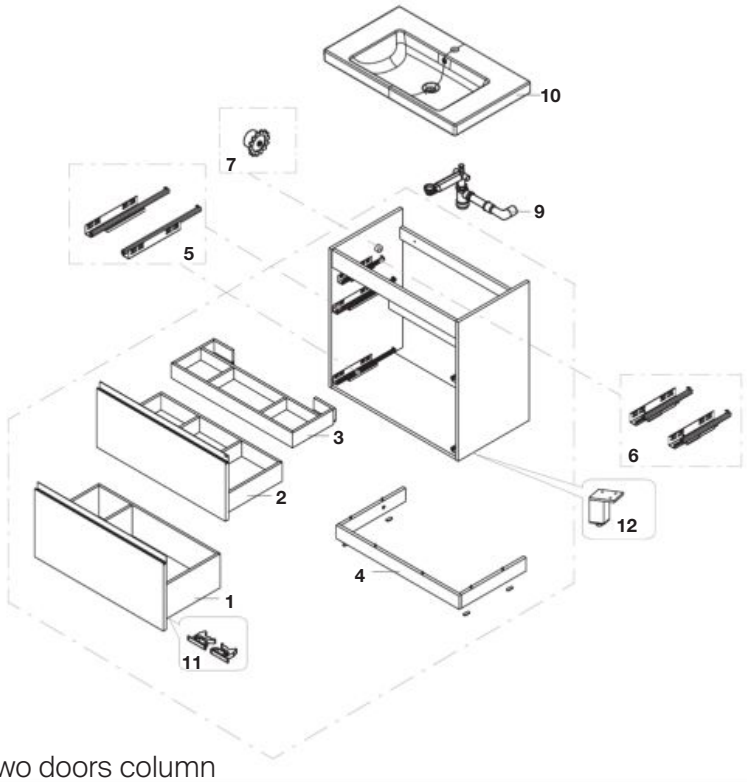

Columna de dos puertas / Two doors column

COLUMNA Column	
A857269...	1600 mm

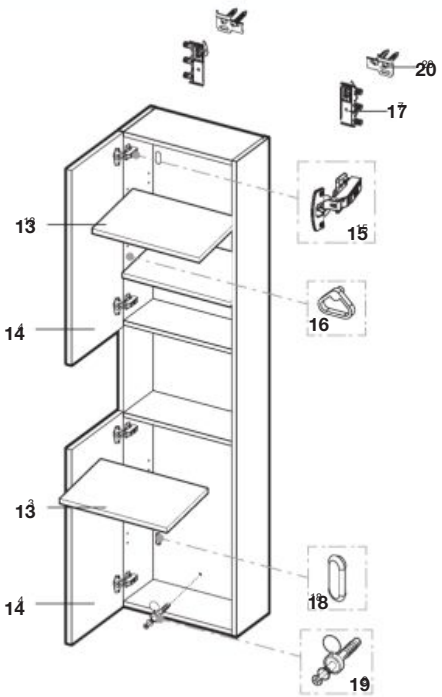

Sólo se muestra el precio del acabado Blanco /
Only the price of the White finish is shown

Las últimas posiciones de cada código indican el acabado (color):
The lasts positions indicates the finish (colour):

Producto Product	Recambio Spare Part	Acabado Finish
806	WH	Blanco brillante / White Lacquered
402	OA	Roble city texturizado / City Oak
434	AS	Fresno nórdico / Nordic Ash

Producto acabado compatible:
Compatible finished products:

			€
8	**A857266...**	600 mm	-
	A857267...	800 mm	-
	A857268...	1000 mm	-
10	**A3270M1000**	600 mm	-
	A3270M0000	800 mm	-
	A3270MA000	1000 mm 1TH	-
	A3270ME000	1000 mm LH	-
	A3270MB000	1000 mm RH	-
12	**A816824339**	4 un	-

			€
1	**AU00552..R**	600 mm	168,00
	AU00553..R	800 mm	213,00
	AU00554..R	1000 mm	222,00
2	**AU00549..R**	600 mm	170,00
	AU00550..R	800 mm	198,00
	AU00551..R	1000 mm	213,00
3	**AU00555..R**	600 mm	100,00
	AU00556..R	800 mm	168,00
	AU00557..R	1000 mm	178,00

				€
4	**AU00685..R**	600 mm		92,50
	AU00686..R	800 mm		96,00
	AU00687..R	1000 mm		101,00
5	**AU0038500R**	350 mm		20,50
6	**AU0056100R**	250 mm		47,00
7	**AU0056200R**			173,00
9	**AU0014100R**			44,90
11	**AU0017300R**			4,68
13	**AU00257..R**			59,80

			€
14	**AU00256..R**		70,30
15	2 un	**AU0019900R**	10,60
16	4 un	**AU0053900R**	33,20
17	**AU0013700R**		16,30
18	4 un		
18	4 un	**AU0013700R**	16,30
19	**AU0013800R**		12,10
20			

Tenue

Mueble base 2 cajones Tenue / Base unit 2 drawers Tenue

UNIK: MUEBLE BASE 2 CAJONES + LAVABO Base unit 1 drawer + WB	
A851933...	600 mm
A851934...	800 mm
A851935...	1000 mm

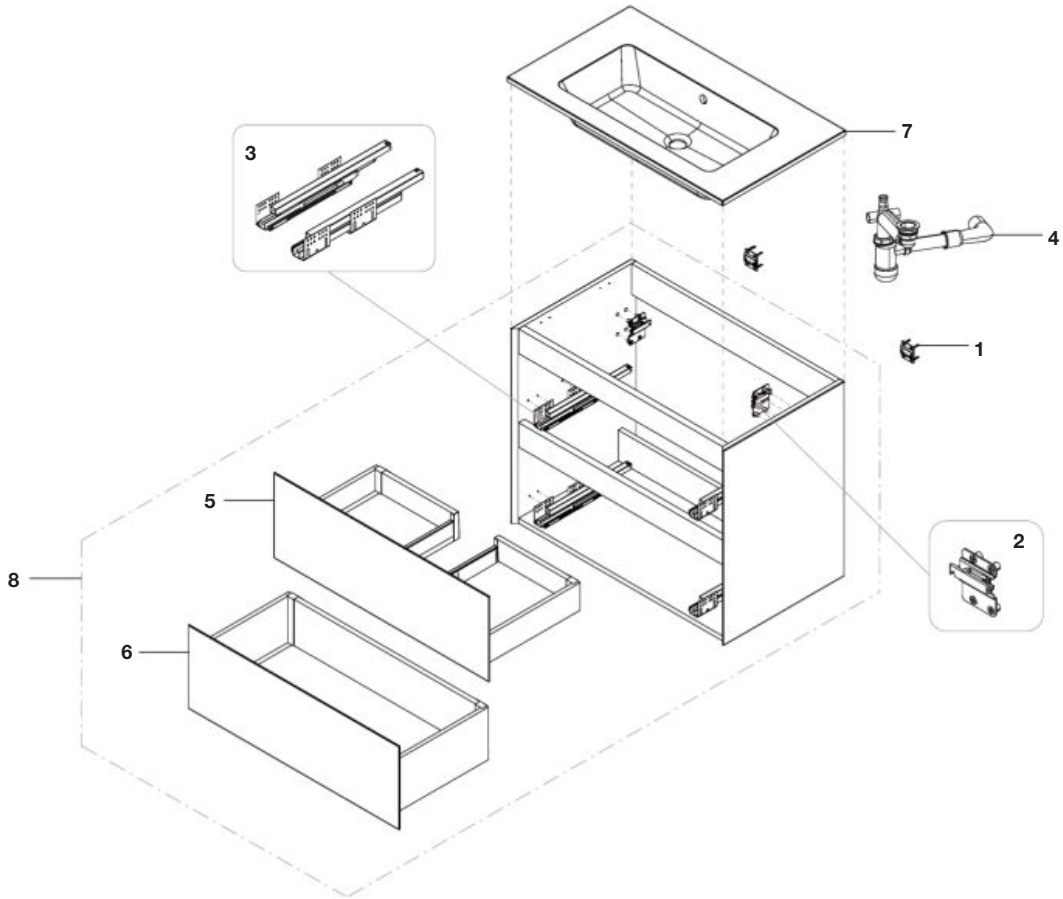

Las últimas posiciones de cada código indican el acabado (color):
The lasts positions indicates the finish (colour):

Producto Product	Recambio Spare Part	Acabado Finish
529	**WW**	Blanco mate / Matt white
530	**PL**	Perla / Pearl
531	**OX**	Onix / Onyx
532	**PN**	Negro mate / Matt Black
538	**NB**	Azul noche / Night Blue

				€
1	2 un	**AU0105100R**		17,50
2	2 un	**AU0105200R**		25,30
3		**AU0105400R**		62,30
4		**AU0014100R**		44,90
5		**AU01080WWR**		193,00
		AU01080PLR		193,00
		AU01080OXR	600 mm	193,00
		AU01080PNR		193,00
		AU01080NBR		193,00
		AU01081WWR		210,00
		AU01081PLR		210,00
		AU01081OXR	800 mm	210,00
		AU01081PNR		210,00
		AU01081NBR		210,00
		AU01082WWR		227,00
		AU01082PLR		227,00
		AU01082OXR	1000 mm	227,00
		AU01082PNR		227,00
		AU01082NBR		227,00

				€
6		**AU01083WWR**		170,00
		AU01083PLR		170,00
		AU01083OXR	600 mm	170,00
		AU01083PNR		170,00
		AU01083NBR		170,00
		AU01084WWR		183,00
		AU01084PLR		183,00
		AU01084OXR	800 mm	183,00
		AU01084PNR		183,00
		AU01084NBR		183,00
		AU01085WWR		202,00
		AU01085PLR		202,00
		AU01085OXR	1000 mm	202,00
		AU01085PNR		202,00
		AU01085NBR		202,00

Producto acabado compatible:
Compatible finished products:

			€
7	**A2W8026100**	600 mm	-
	A2W8027100	800 mm	-
	A2W8028100	1000 mm	-
8	**A857807...**	600 mm	-
	A857808...	800 mm	-
	A857809...	1000 mm	-

Tenue

Mueble base 2 cajones + 1 hueco DCH Tenue / Base unit 2 drawers + 1 hole RH Tenue

UNIK: MUEBLE BASE 2 CAJONES DCH + LAVABO DCH Base unit 1 drawer RH + RH WB	
A851938...	1000 mm

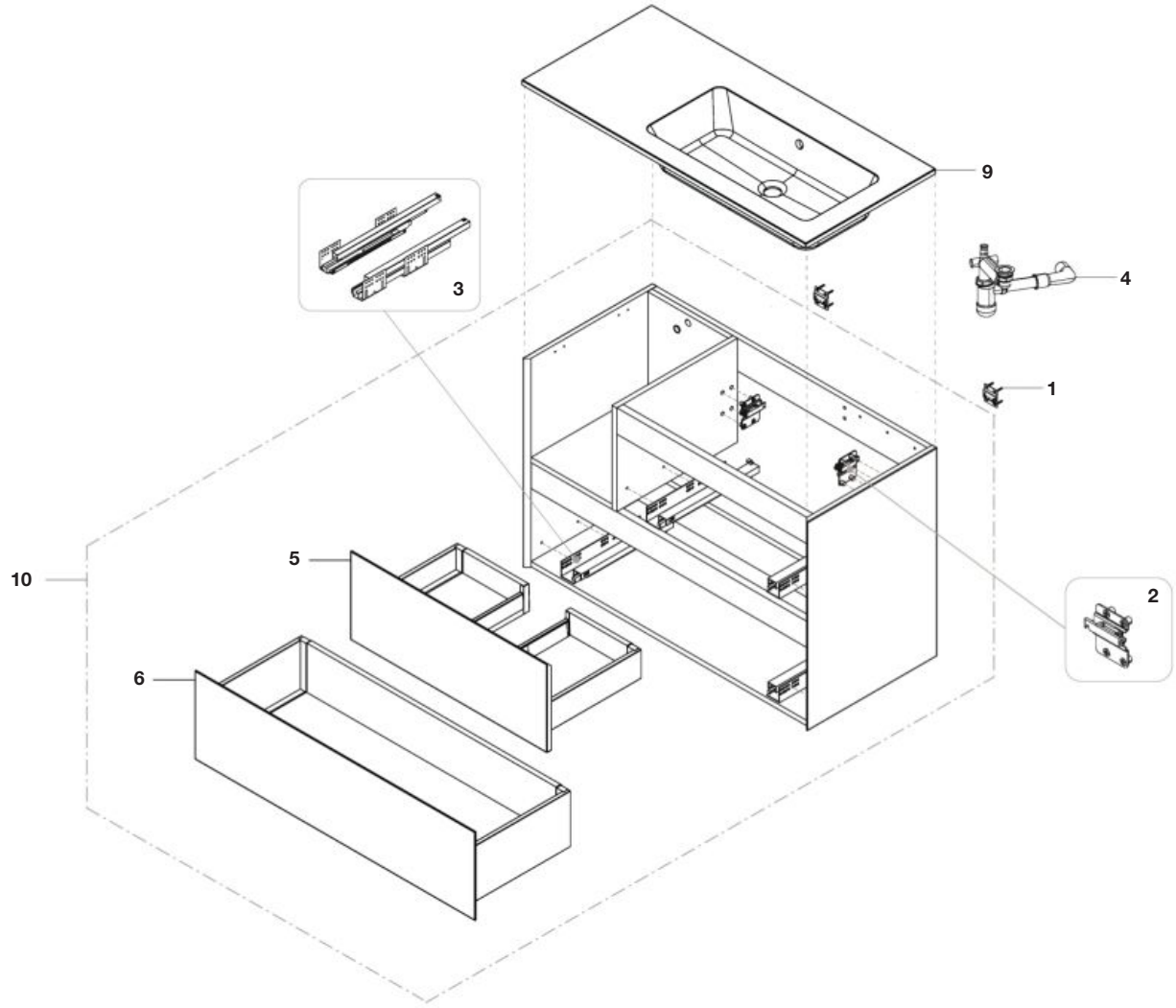

Las últimas posiciones de cada código indican el acabado (color):
The lasts positions indicates the finish (colour):

Producto Product	Recambio Spare Part	Acabado Finish
529	**WW**	**Blanco mate /** Matt white
530	**PL**	**Perla /** Pearl
531	**OX**	**Onix /** Onyx
532	**PN**	**Negro mate /** Matt Black
538	**NB**	**Azul noche /** Night Blue

				€
1	2 un	**AU0105100R**		17,50
2	2 un	**AU0105200R**		25,30
3	+	**AU0105400R**		62,30
4	+	**AU0014100R**		44,90
5		**AU01120WWR**	700 mm	203,00
		AU01120PLR		203,00
		AU01120OXR		203,00
		AU01120PNR		203,00
		AU01120NBR		203,00

			€
6	**AU01085WWR**	1000 mm	202,00
	AU01085PLR		202,00
	AU01085OXR		202,00
	AU01085PNR		202,00
	AU01085NBR		202,00

Producto acabado compatible:
Compatible finished products:

			€
9	**A2W8030100**	1000 mm	-
10	**A857812...**		-

Tenue

Mueble base 2 cajones + 1 hueco IZQ Tenue / Base unit 2 drawers + 1 hole LH Tenue

UNIK: MUEBLE BASE 2 CAJONES IZQ + LAVABO IZQ Base unit 1 drawer LH + LH WB	
A851936...	1000 mm

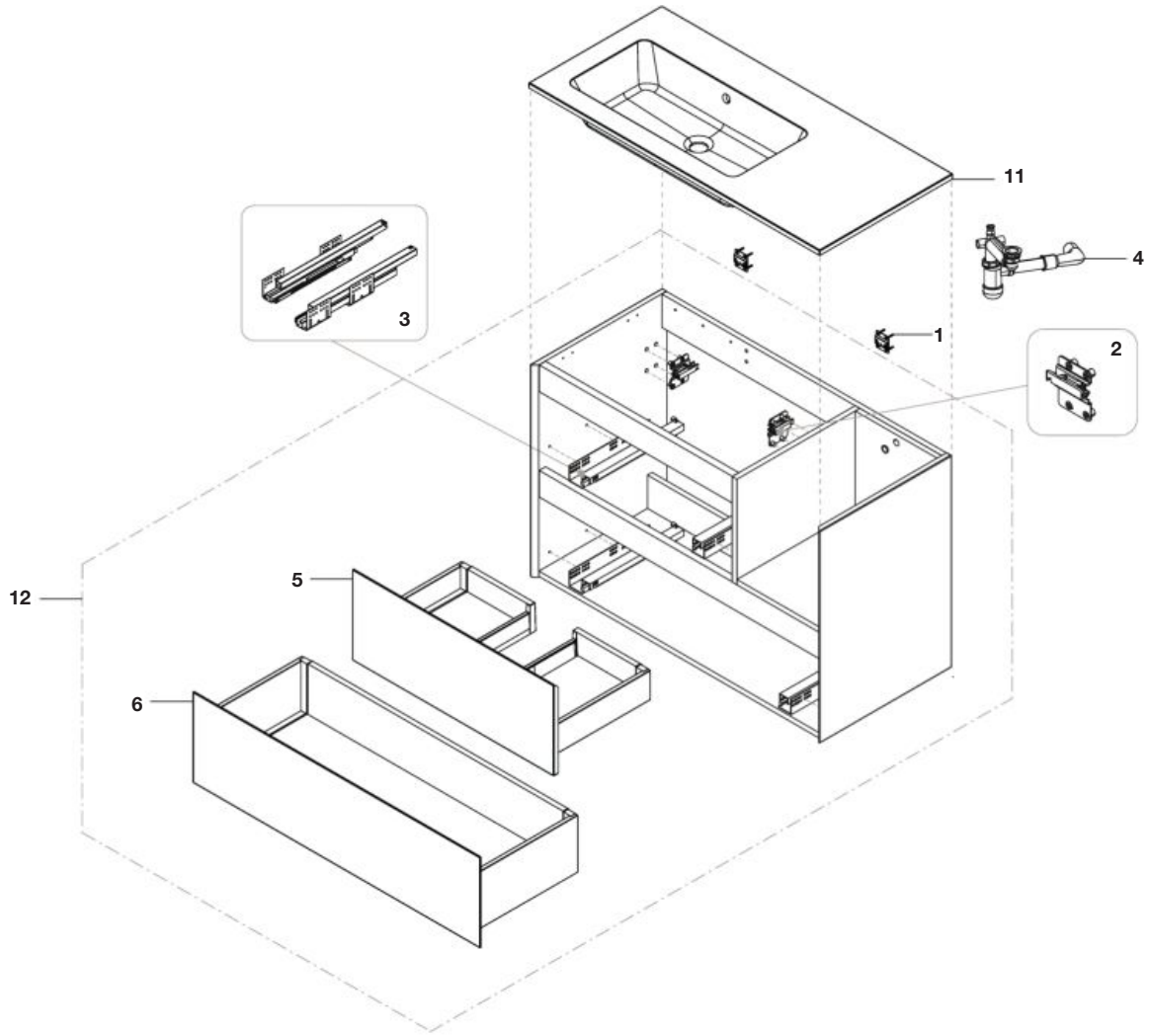

Las últimas posiciones de cada código indican el acabado (color):
The lasts positions indicates the finish (colour):

Producto Product	Recambio Spare Part	Acabado Finish
529	**WW**	Blanco mate / Matt white
530	**PL**	Perla / Pearl
531	**OX**	Onix / Onyx
532	**PN**	Negro mate / Matt Black
538	**NB**	Azul noche / Night Blue

				€
1	2 un	**AU0105100R**		17,50
2	2 un	**AU0105200R**		25,30
3	+	**AU0105400R**		62,30
4	+	**AU0014100R**		44,90
5		**AU01121WWR**	700 mm	203,00
		AU01121PLR		203,00
		AU01121OXR		203,00
		AU01121PNR		203,00
		AU01121NBR		203,00

				€
6		**AU01085WWR**	1000 mm	202,00
		AU01085PLR		202,00
		AU01085OXR		202,00
		AU01085PNR		202,00
		AU01085NBR		202,00

Producto acabado compatible:
Compatible finished products:

			€
9	**A2W8029100**	1000 mm	-
10	**A857810...**		-

Aleyda

Mueble base compacto de dos cajones con lavabo / Two drawers compact vanity unit with washbasin

UNIK: MUEBLE BASE 2 CAJONES CPT Base unit 2 drawers CPT	
A851809...	500 mm
A851810...	600 mm
A851811...	700 mm
A851812...	800 mm

PACK: UNIK 2 CAJONES CPT + ESPEJO Unik 2 drawers CPT + mirror	
A851829...	500 mm
A851830...	600 mm
A851831...	700 mm
A851832...	800 mm

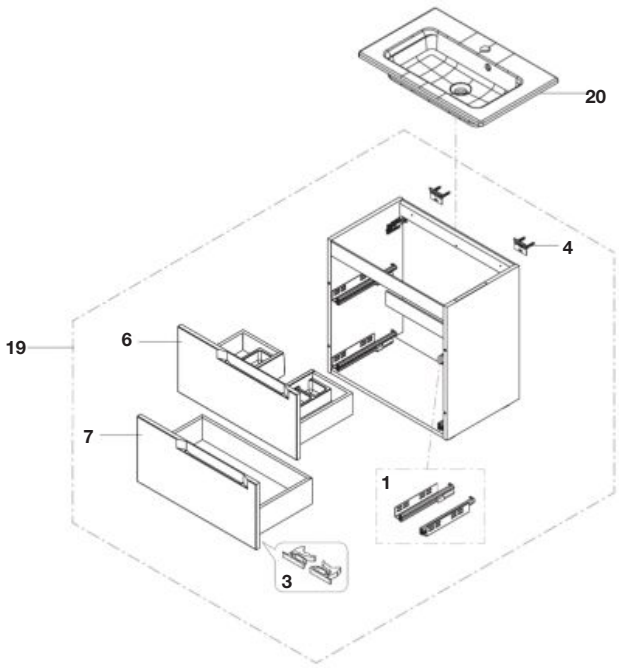

Mueble base compacto de tres cajones con lavabo / Two drawers compact vanity unit with right hand washbasin

UNIK: MUEBLE BASE 3 CAJONES CPT Base unit 3 drawers CPT	
A851883...	600 mm
A851884...	800 mm

PACK: UNIK 3 CAJONES CPT + ESPEJO Unik 3 drawers CPT + mirror	
A851885...	600 mm
A851886...	800 mm

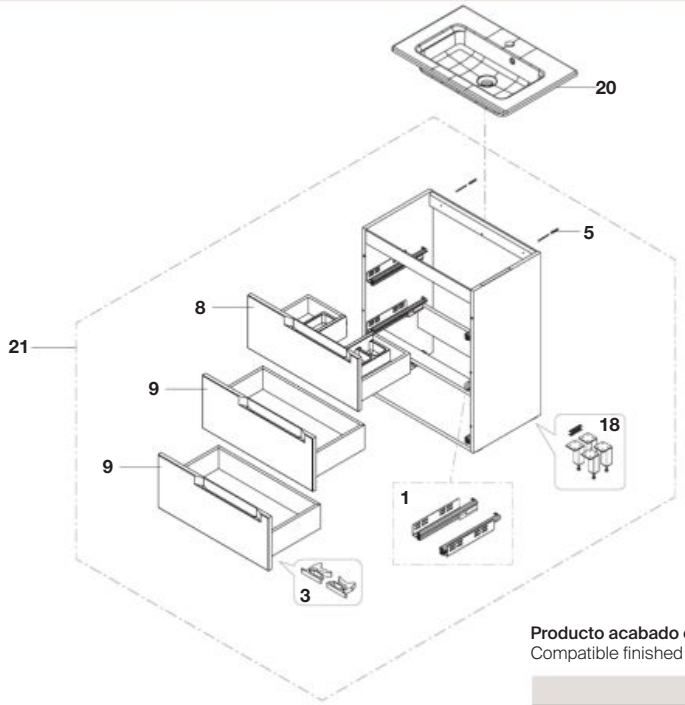

Las últimas posiciones de cada código indican el acabado (color):
The lasts positions indicates the finish (colour):

Producto Product	**Recambio** Spare Part	Acabado Finish
509	**WM**	Blanco mate / Matt White
514	**LG**	Gris piedra / Matt Light Grey
523	**MB**	Negro mate / Matt Black
524	**BN**	Beige madera / Beige Nature
525	**WN**	Blanco madera / White Nature

				€
1	2 un	**AU0092400R**		59,00
3	2 un	**AU0017300R**		4,68
4	2 un	**AU0013300R**		15,80
5	2 un	**AU0081800R**		1,05
6		**AU00943..R**	500 mm	163,00
		AU00944..R	600 mm	173,00
		AU00945..R	700 mm	182,00
		AU00946..R	800 mm	190,00

Sólo se muestra el precio del acabado Blanco /
Only the price of the White finish is shown

			€
7	**AU00957..R**	500 mm	118,00
	AU00958..R	600 mm	129,00
	AU00959..R	700 mm	138,00
	AU00960..R	800 mm	148,00
8	**AU00933..R**	600 mm	168,00
	AU00934..R	800 mm	185,00
9	**AU00951..R**	600 mm	125,00
	AU00952..R	800 mm	142,00

Producto acabado compatible:
Compatible finished products:

			€
18	**A816827...**		-
19	**A857704...**	500 mm	-
	A857705...	600 mm	-
	A857706...	700 mm	-
	A857707...	800 mm	-
20	**A3279AD000**	500 mm	-
	A3279AC000	600 mm	-
	A3279AB000	700 mm	-
	A3279AA000	800 mm	-
21	**A857759...**	600 mm	-
	A857760...	800 mm	-

Aleyda

Mueble base de dos cajones con lavabo / Two drawers vanity unit with lefthand washbasin

UNIK: MUEBLE BASE 2 CAJONES Base unit 2 drawer	
A851813...	600 mm
A851814...	700 mm
A851816...	800 mm
A851819...	1000 mm

PACK: UNIK 2 CAJONES + ESPEJO Unik 2 drawer + mirror	
A851833...	600 mm
A851834...	700 mm
A851836...	800 mm
A851839...	1000 mm

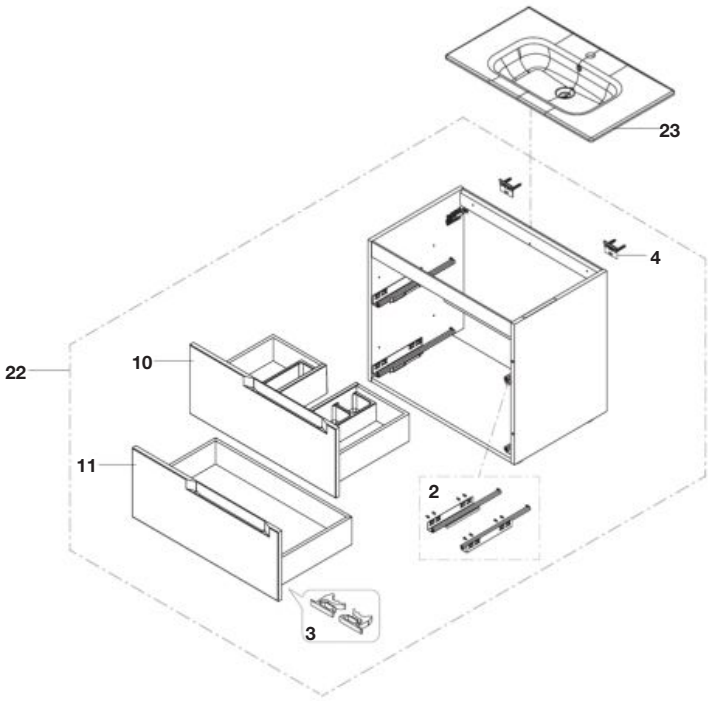

Mueble base de dos cajones con lavabo derecho / Two drawes vanity unit with washbasin right

UNIK: MUEBLE BASE 2 CAJONES DCH Base unit 2 drawers RH	
A851815...	800 mm
A857718...	1000 mm

PACK: UNIK 2 CAJONES DCH + ESPEJO Unik 2 drawers RH + mirror	
A851835...	800 mm
A851838...	1000 mm

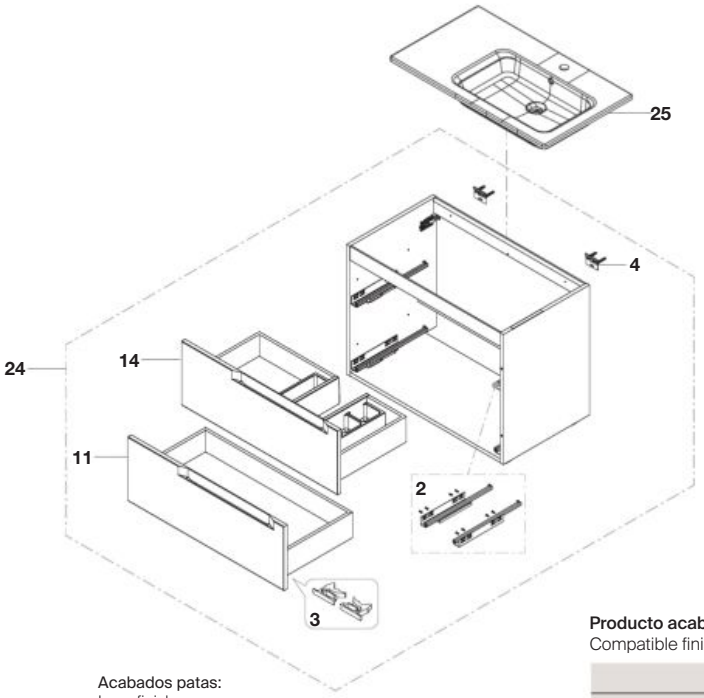

Sólo se muestra el precio del acabado Blanco /
Only the price of the White finish is shown

Las últimas posiciones de cada código indican el acabado (color):
The lasts positions indicates the finish (colour):

Producto Product	**Recambio** Spare Part	Acabado Finish
509	**WM**	Blanco mate / Matt White
514	**LG**	Gris piedra / Matt Light Grey
523	**MB**	Negro mate / Matt Black
524	**BN**	Beige madera / Beige Nature
525	**WN**	Blanco madera / White Nature

Acabados patas:
Legs finishes:

Recambio Spare part	**Acabado** Finished
339	**Aluminio** / Aluminium
485	**Negro mate** / Matt Black

Producto acabado compatible:
Compatible finished products:

				€
2	2 un	**AU0038500R**		20,50
3	2 un	**AU0017300R**		4,68
4	2 un	**AU0013300R**		15,80
10		**AU00935..R**	600 mm	180,00
		AU00936..R	700 mm	190,00
		AU00939..R	800 mm	198,00
		AU00942..R	1000 mm	220,00

			€
11	**AU00953..R**	600 mm	131,00
	AU00954..R	700 mm	142,00
	AU00955..R	800 mm	151,00
	AU00956..R	1000 mm	170,00
14	**AU00938..R**	800 mm	198,00
	AU00941..R	1000 mm	222,00

			€
22	**A857708...**	600 mm	-
	A857709...	700 mm	-
	A857711...	800 mm	-
	A857714...	1000 mm	-
23	**A3279A8000**	600 mm	-
	A3279A7000	700 mm	-
	A3279A4000	800 mm	-
	A3279A1000	1000 mm	-
24	**A857710...**	800 mm	-
	A857713...	1000 mm	-
25	**A3279A5000**	800 mm	-
	A3279A2000	1000 mm	-

Aleyda

Mueble base de dos cajones con lavabo izquierdo / Two drawes vanity unit with washbasin left

UNIK: **MUEBLE BASE 2 CAJONES IZD** Base unit 2 drawers LH	
A851817...	800 mm
A857720...	1000 mm

PACK: **UNIK 2 CAJONES IZD + ESPEJO** Unik 2 drawers LH + mirror	
A851837...	800 mm
A851840...	1000 mm

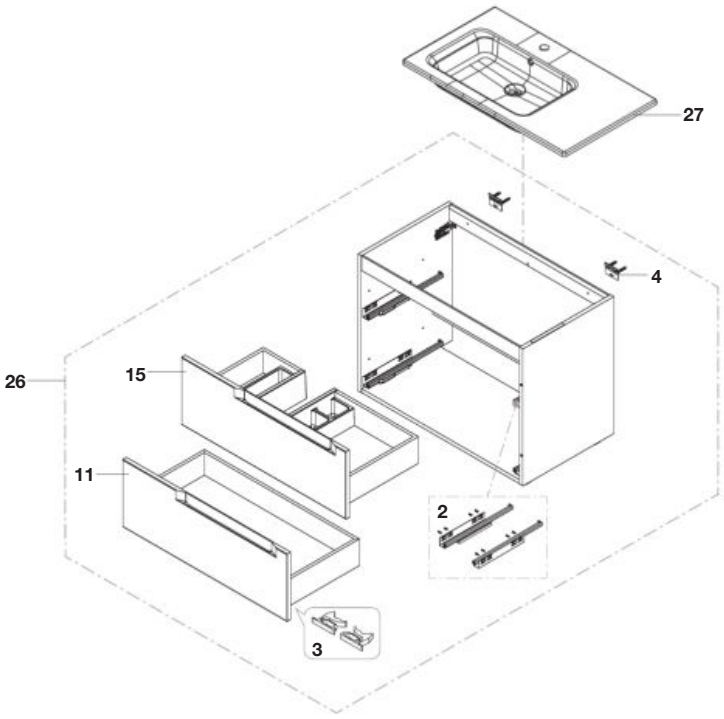

Mueble base de cuatro cajones con lavabo doble / Four drawers vanity unit with double washbasin

UNIK: **MUEBLE BASE 4 CAJONES** Base unit 4 drawers	
A851887...	1200 mm

PACK: **UNIK 4 CAJONES + ESPEJO** Unik 4 drawers+ mirror	
A851889...	1200 mm

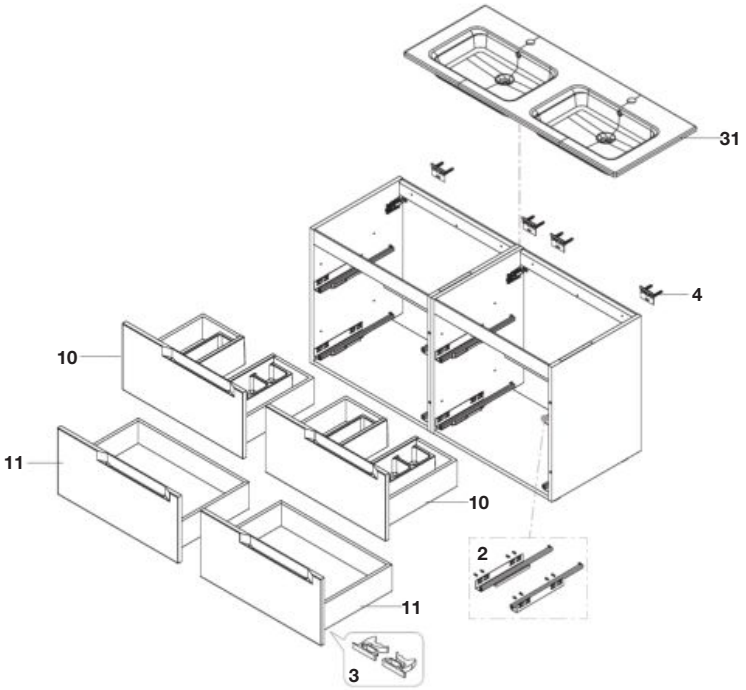

Las últimas posiciones de cada código indican el acabado (color):
The lasts positions indicates the finish (colour):

Producto **Product**	**Recambio** **Spare Part**	Acabado Finish
509	**WM**	**Blanco mate /** Matt White
514	**LG**	**Gris piedra /** Matt Light Grey
523	**MB**	**Negro mate /** Matt Black
524	**BN**	**Beige madera /** Beige Nature
525	**WN**	**Blanco madera /** White Nature

				€
2	2 un	**AU0038500R**		20,50
3	2 un	**AU0017300R**		4,68
4	2 un	**AU0013300R**		15,80
10		**AU00935..R**	600 mm	180,00

Sólo se muestra el precio del acabado Blanco /
Only the price of the White finish is shown

			€
11	**AU00953..R**	600 mm	131,00
	AU00955..R	800 mm	151,00
	AU00956..R	1000 mm	170,00
15	**AU00937..R**	800 mm	198,00
	AU00940..R	1000 mm	222,00

Producto acabado compatible:
Compatible finished products:

			€
26	**A857710...**	800 mm	-
	A857713...	1000 mm	-
27	**A3279A5000**	800 mm	-
	A3279A2000	1000 mm	-
31	**A3279A0000**	1200 mm	-

Aleyda

Mueble base de tres cajones con lavabo / Three drawers vanity unit with washbasin

UNIK: MUEBLE BASE 3 CAJONES Base unit 3 drawer	
A851821...	600 mm
A851822...	700 mm
A851824...	800 mm
A851827...	1000 mm

UNIK: UNIK 3 CAJONES + ESPEJO Unik 3 drawers+ mirror	
A851841...	600 mm
A851842...	700 mm
A851844...	800 mm
A851847...	1000 mm

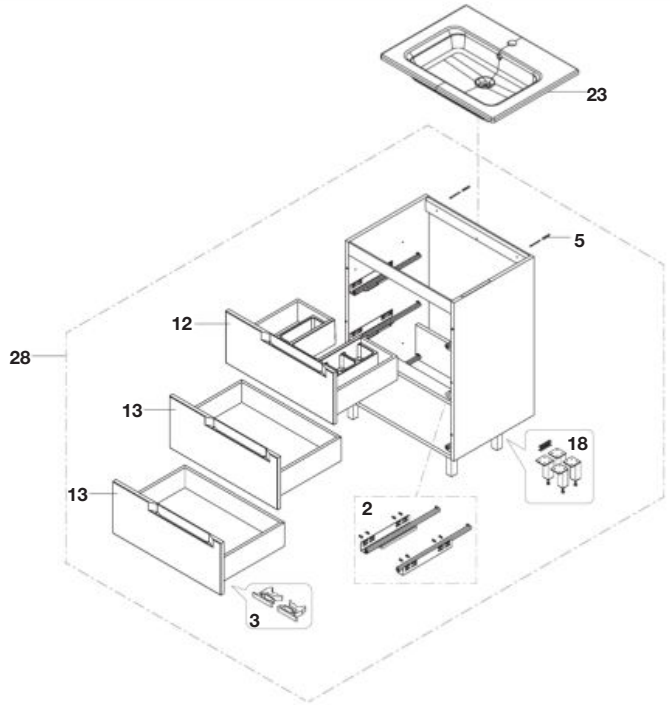

Mueble base de tres cajones con lavabo derecho / Three drawers vanity unit with right hand washbasin

UNIK: MUEBLE BASE 3 CAJONES DCH Base unit 3 drawers RH	
A851823...	800 mm
A851826...	1000 mm

PACK: UNIK 3 CAJONES DCH + ESPEJO Unik 3 drawers RH+ mirror	
A851843...	800 mm
A851846...	1000 mm

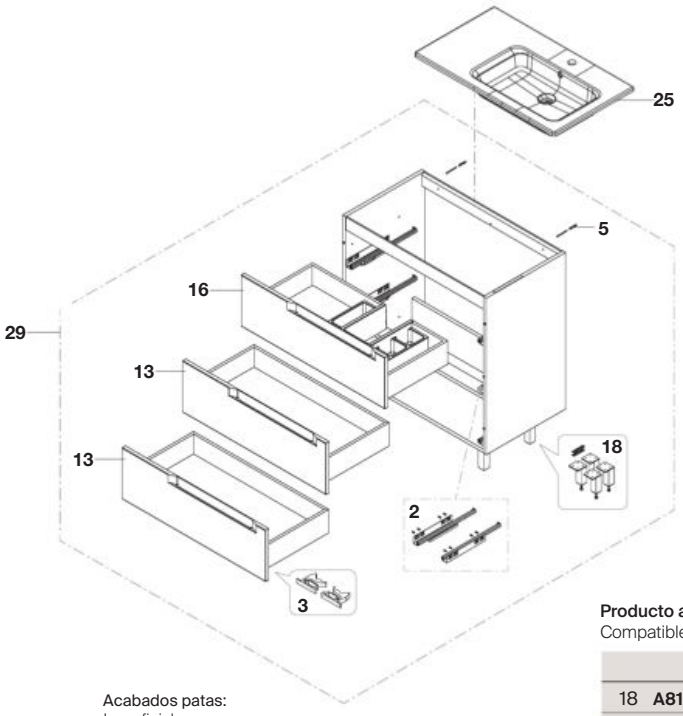

Sólo se muestra el precio del acabado Blanco /
Only the price of the White finish is shown

Las últimas posiciones de cada código indican el acabado (color):
The lasts positions indicates the finish (colour):

Producto Product	**Recambio** Spare Part	Acabado Finish
509	**WM**	Blanco mate / Matt White
514	**LG**	Gris piedra / Matt Light Grey
523	**MB**	Negro mate / Matt Black
524	**BN**	Beige madera / Beige Nature
525	**WN**	Blanco madera / White Nature

Acabados patas:
Legs finishes:

Recambio **Spare part**	Acabado Finished
339	Aluminio / Aluminium
485	Negro mate / Matt Black

				€
2	2 un	**AU0038500R**		20,50
3	2 un	**AU0017300R**		4,68
5	2 un	**AU0081800R**		1,05
12		**AU00925..R**	600 mm	177,00
		AU00926..R	700 mm	185,00
		AU00929..R	800 mm	193,00
		AU00932..R	1000 mm	215,00

			€
13	**AU00947..R**	600 mm	127,00
	AU00948..R	700 mm	137,00
	AU00949..R	800 mm	145,00
	AU00950..R	1000 mm	164,00
16	**AU00928..R**	800 mm	193,00
	AU00931..R	1000 mm	217,00

Producto acabado compatible:
Compatible finished products:

			€
18	**A816827...**		-
23	**A3279A8000**	600 mm	-
	A3279A7000	700 mm	-
	A3279A4000	800 mm	-
	A3279A1000	1000 mm	-
25	**A3279A5000**	800 mm	-
	A3279A2000	1000 mm	-
28	**A857716...**	600 mm	-
	A857717...	700 mm	-
	A857719...	800 mm	-
	A857722...	1000 mm	-
29	**A857718...**	800 mm	-
	A857721...	1000 mm	-

Aleyda

Mueble base de tres cajones con lavabo izquierdo / Three drawers vanity unit with left hand washbasin

UNIK: MUEBLE BASE 3 CAJONES IZD Base unit 3 drawers LH	
A851825...	800 mm
A851828...	1000 mm

PACK: UNIK 3 CAJONES IZD + ESPEJO Unik 3 drawers LH+ mirror	
A851845...	800 mm
A851848...	1000 mm

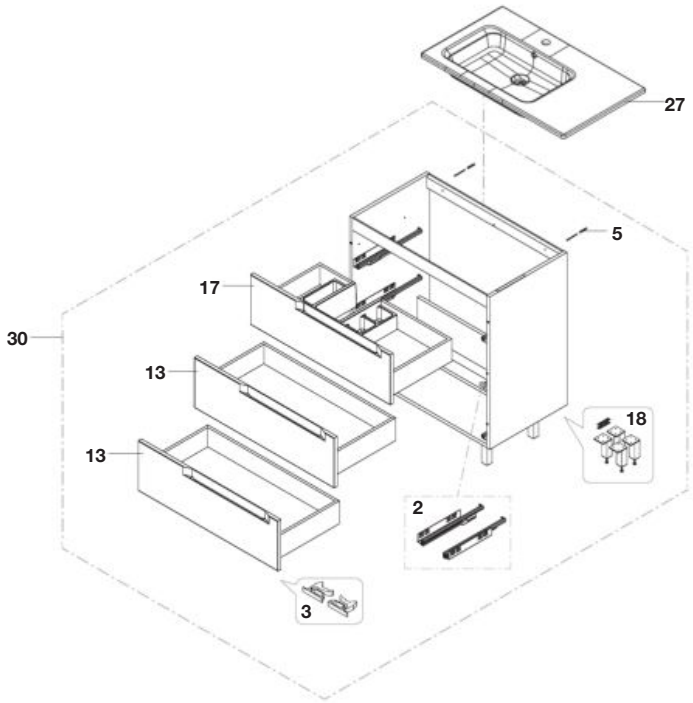

Mueble base de sis cajones con lavabo doble / Six drawers vanity unit with double washbasin

UNIK: MUEBLE BASE 6 CAJONES Base unit 6 drawers	
A851888...	1200 mm

PACK: UNIK 6 CAJONES + ESPEJO Unik 6 drawers+ mirror	
A851890...	1200 mm

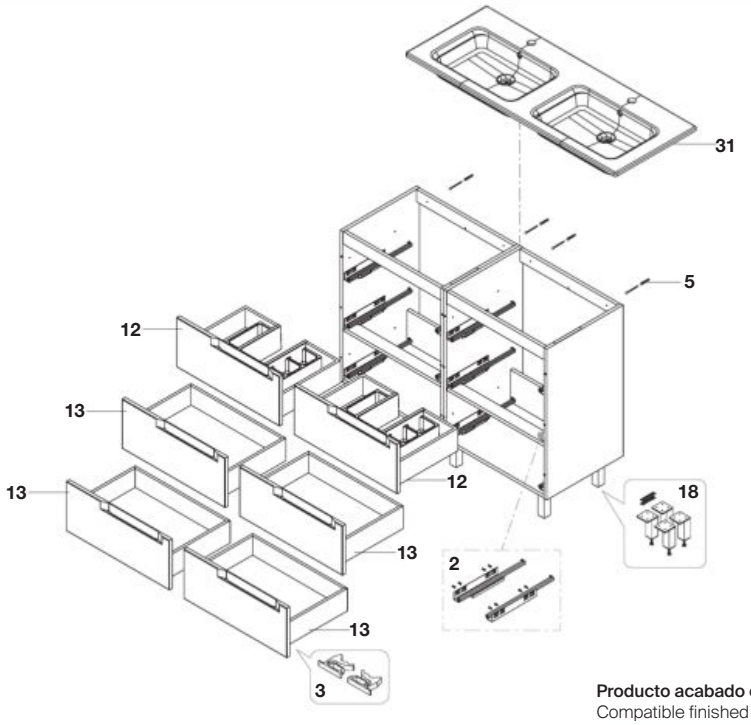

Sólo se muestra el precio del acabado Blanco /
Only the price of the White finish is shown

Las últimas posiciones de cada código indican el acabado (color):
The lasts positions indicates the finish (colour):

Producto Product	**Recambio** Spare Part	Acabado Finish
509	**WM**	Blanco mate / Matt White
514	**LG**	Gris piedra / Matt Light Grey
523	**MB**	Negro mate / Matt Black
524	**BN**	Beige madera / Beige Nature
525	**WN**	Blanco madera / White Nature

Acabados patas:
Legs finishes:

Recambio Spare part	**Acabado** Finished
339	Aluminio / Aluminium
485	Negro mate / Matt Black

				€
2	2 un	**AU0038500R**		20,50
3	2 un	**AU0017300R**		4,68
5	2 un	**AU0081800R**		1,05
12		**AU00925..R**	600 mm	177,00

			€
13	**AU00947..R**	600 mm	127,00
	AU00949..R	800 mm	145,00
	AU00950..R	1000 mm	164,00
17	**AU00927..R**	800 mm	193,00
	AU00930..R	1000 mm	217,00

Producto acabado compatible:
Compatible finished products:

			€
18	**A816827...**		-
25	**A3279A5000**	800 mm	-
	A3279A2000	1000 mm	-
27	**A3279A6000**	800 mm	-
	A3279A3000	1000 mm	-
29	**A857718...**	800 mm	-
	A857721...	1000 mm	-
30	**A857720...**	800 mm	-
	A857723...	1000 mm	-
31	**A3279A0000**	1200 mm	-

Tenet

Mueble base de dos puertas con lavabo / Two doors vanity unit with washbasin

UNIK: MUEBLE BASE 2 PUERTAS Base unit 2 doors	
A851773...	600 mm
A851774...	800 mm

PACK: UNIK 2 PUERTAS + ESPEJO + LUMINARIA Unik 2 doors + mirror + lighting	
A851783...	600 mm
A851784...	800 mm

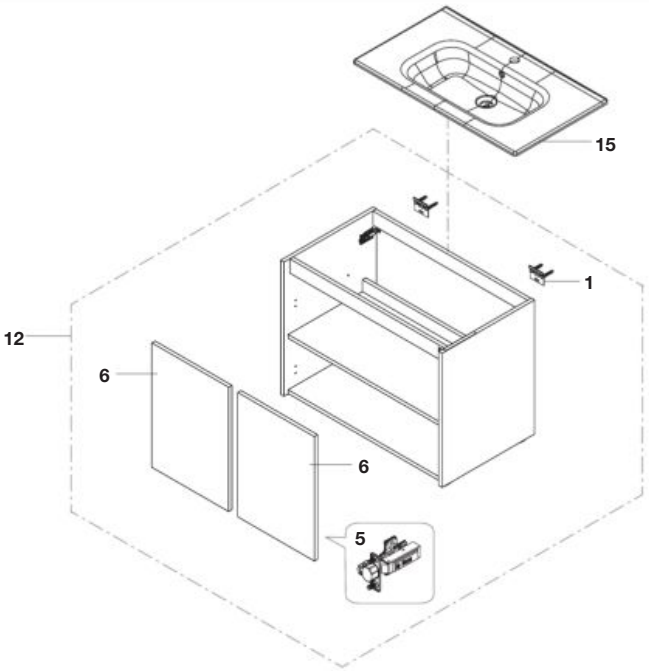

Mueble base de dos cajones con lavabo / Two drawers vanity unit with washbasin

UNIK: MUEBLE BASE 2 CAJONES Base unit 2 drawers	
A851775...	600 mm
A851776...	700 mm
A851777...	800 mm
A851778...	1000 mm
A851891...	1200 mm

PACK: UNIK 2 CAJONES + ESPEJO + LUMINARIA Unik 2 drawers + mirror + lighting	
A851785...	600 mm
A851786...	700 mm
A851787...	800 mm
A851788...	1000 mm
A851895...	1200 mm

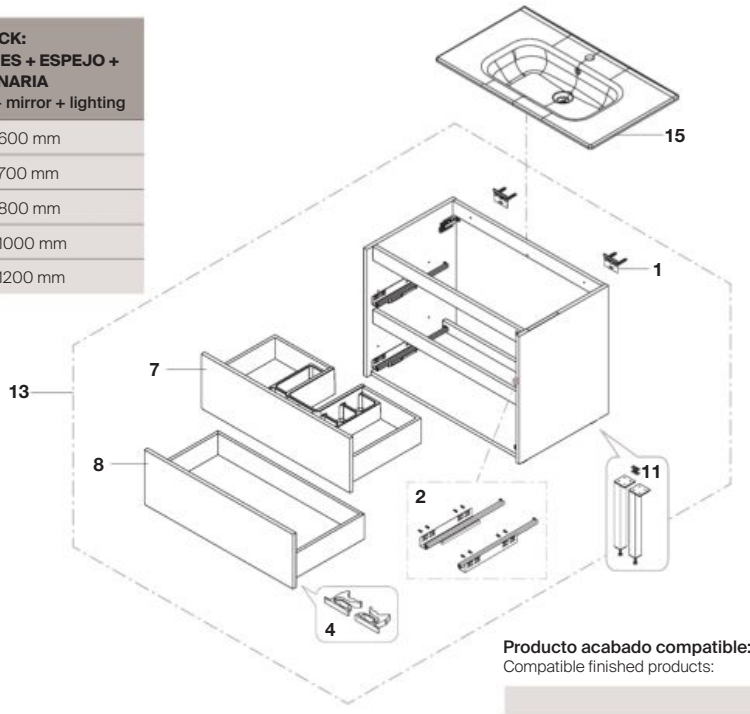

Las últimas posiciones de cada código indican el acabado (color):
The lasts positions indicates the finish (colour):

Producto Product	**Recambio** Spare Part	Acabado Finish
806	**WH**	Blanco brillo / Glossy White
516	**LG**	Gris claro brillante / Matt Light Grey
402	**CO**	Roble / City Oak
434	**AS**	Fresno / Nordic Ash
517	**WL**	Nogal / Walnut

				€
1	2 un	**AU0013300R**		15,80
2		**AU0038500R**		20,50
4		**AU0017300R**		4,68
5	2 un	**AU0099900R**		17,20
6		**AU00981..R**	600 mm	34,50
		AU00982..R	800 mm	39,20

Sólo se muestra el precio del acabado Blanco /
Only the price of the White finish is shown

			€
7	**AU00983..R**	600 mm	126,00
	AU00985..R	700 mm	134,00
	AU00987..R	800 mm	141,00
	AU00989..R	1000 mm	152,00
8	**AU00984..R**	600 mm	74,20
	AU00986..R	700 mm	81,50
	AU00988..R	800 mm	87,20
	AU00990..R	1000 mm	101,00

Producto acabado compatible:
Compatible finished products:

			€
11	**A816829339**	275 mm	-
	A816826339	335 mm	-
12	**A857692...**	600 mm	-
	A857693...	800 mm	-
13	**A857694...**	600 mm	-
	A857695...	700 mm	-
	A857696...	800 mm	-
	A857697...	1000 mm	-
15	**A32799E000**	600 mm	-
	A32799D000	700 mm	-
	A32799C000	800 mm	-
	A32799B000	1000 mm	-
	A32799A000	1200 mm	-

Tenet

Mueble base de tres cajones con lavabo / Three drawers vanity unit with washbasin

UNIK: MUEBLE BASE 3 CAJONES Base unit 3 drawers	
A851779...	600 mm
A851780...	700 mm
A851781...	800 mm
A851782...	1000 mm
A851892...	1200 mm

PACK: UNIK 3 CAJONES + ESPEJO + LUMINARIA Unik 3 drawers + mirror + lighting	
A851789...	600 mm
A851790...	700 mm
A851791...	800 mm
A851792...	1000 mm
A851896...	1200 mm

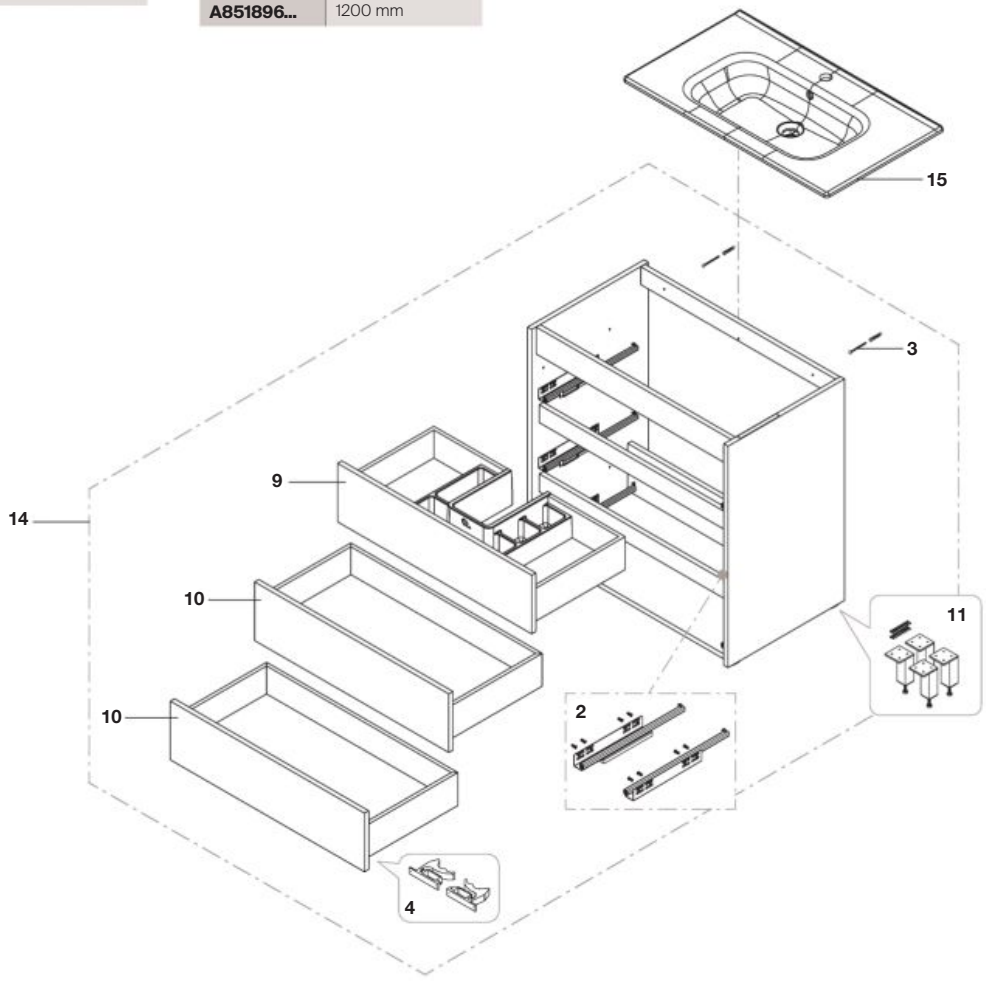

Las últimas posiciones de cada código indican el acabado (color):
The lasts positions indicates the finish (colour):

Producto Product	Recambio Spare Part	Acabado Finish
806	WH	Blanco brillo / Glossy White
516	LG	Gris claro brillante / Matt Light Grey
402	CO	Roble / City Oak
434	AS	Fresno / Nordic Ash
517	WL	Nogal / Walnut

				€
2		**AU0038500R**		20,50
3	2 un	**AU0081800R**		1,05
4		**AU0017300R**		4,68
9		**AU00991..R**	600 mm	127,00
		AU00993..R	700 mm	134,00
		AU00995..R	800 mm	138,00
		AU00997..R	1000 mm	152,00

Sólo se muestra el precio del acabado Blanco /
Only the price of the White finish is shown

			€
10	**AU00992..R**	600 mm	73,50
	AU00994..R	700 mm	82,20
	AU00996..R	800 mm	85,30
	AU00998..R	1000 mm	101,00

Producto acabado compatible:
Compatible finished products:

			€
11	**A816827339**	110 mm	-
14	**A857698...**	600 mm	-
	A857699...	700 mm	-
	A857700...	800 mm	-
	A857701...	1000 mm	-
15	**A32799E000**	600 mm	-
	A32799D000	700 mm	-
	A32799C000	800 mm	-
	A32799B000	1000 mm	-
	A32799A000	1200 mm	-

Tenor

Mueble base de un cajón + un hueco / Base unit one drawer + one hole

UNIK: MUEBLE BASE 1 CAJÓN + 1 HUECO Base unit 1 drawer + 1 hole	
A852079...	600 mm
A852080...	800 mm
A852081...	1000 mm
A852093..	1200 mm

PACK: UNIK 1 CAJÓN y 1 HUECO + ESPEJO + LUMINARIA Unik 1 drawer & 1 hole + mirror + lighting	
A852086...	600 mm
A852087...	800 mm
A852088...	1000 mm
A852094...	1200 mm

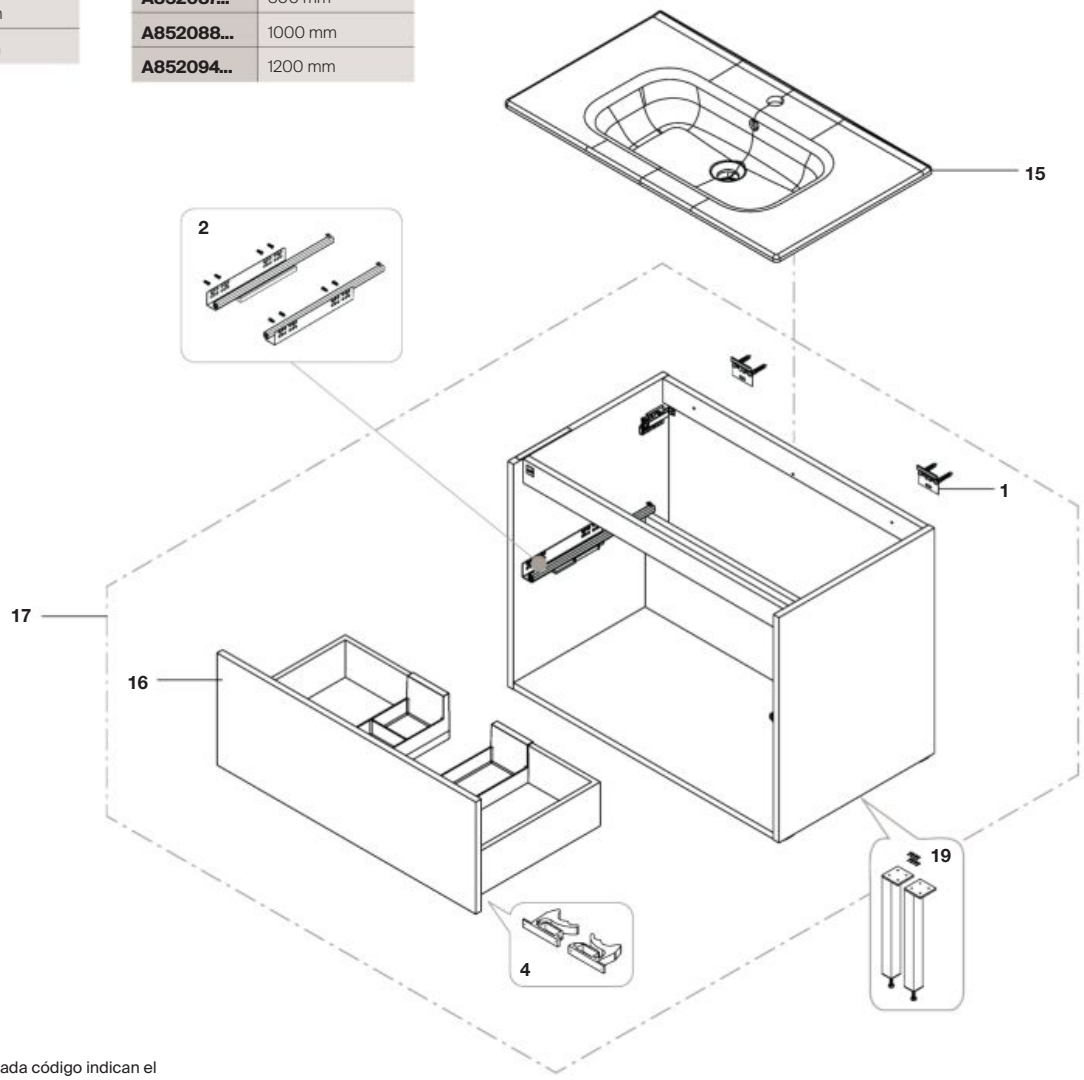

Las últimas posiciones de cada código indican el acabado (color):
The lasts positions indicates the finish (colour):

Producto Product	Recambio Spare Part	Acabado Finish
806	**WH**	**Blanco brillo /** Glossy White
516	**LG**	**Gris claro brillante /** Matt Light Grey
402	**CO**	**Roble /** City Oak
434	**AS**	**Fresno /** Nordic Ash
517	**WL**	**Nogal /** Walnut

				€
1	2 un	**AU0013300R**		15,80
2		**AU0038500R**		20,50
4		**AU0017300R**		4,68
16		**AU01077WHR**	600 mm	115,00
		AU01077LGR		117,00
		AU01077COR		119,00
		AU01077ASR		118,00
		AU01077WLR		114,00

				€
16		**AU01078WHR**	800 mm	129,00
		AU01078LGR		133,00
		AU01078COR		134,00
		AU01078ASR		133,00
		AU01078WLR		128,00
		AU01079WHR	1000 mm	139,00
		AU01079LGR		147,00
		AU01079COR		149,00
		AU01079ASR		148,00
		AU01079WLR		141,00

Producto acabado compatible:
Compatible finished products:

			€
15	**A32799E000**	600 mm	-
	A32799C000	800 mm	-
	A32799B000	1000 mm	-
	A32799A000	1200 mm	-
17	**A857913...**	600 mm	-
	A857914...	800 mm	-
	A857915...	1000 mm	-
19	**A816829339**	272 mm	-

Tenor

Mueble base de un cajón / Base unit one drawer

UNIK: MUEBLE BASE 1 CAJÓN Base unit 1 drawer	
A852082...	600 mm
A852083...	800 mm
A852084...	1000 mm
A852085..	1200 mm

PACK: UNIK 1 CAJÓN + ESPEJO + LUMINARIA Unik 1 drawer + mirror + lighting	
A852089...	600 mm
A852090...	800 mm
A852091...	1000 mm
A852092...	1200 mm

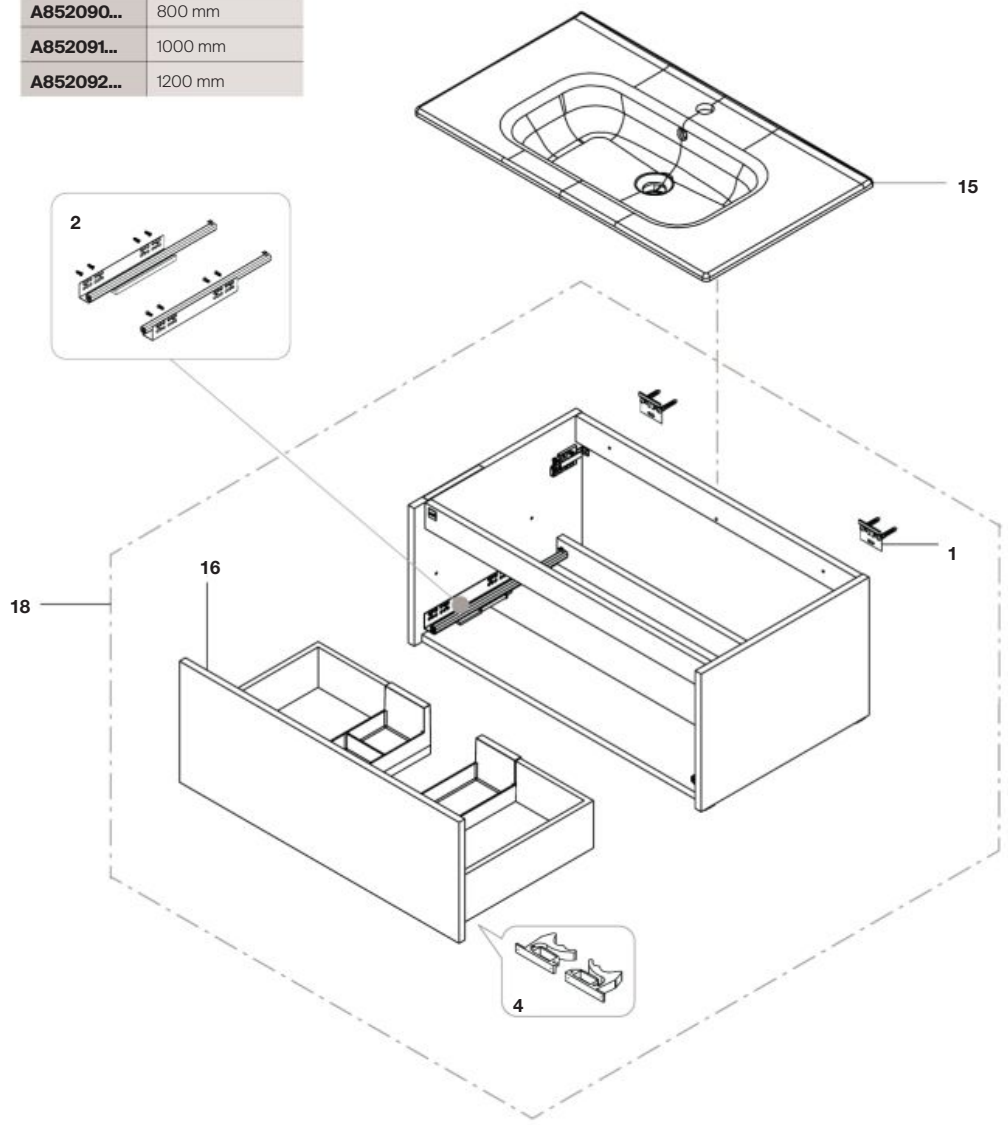

Las últimas posiciones de cada código indican el acabado (color):
The lasts positions indicates the finish (colour):

Producto Product	**Recambio** Spare Part	**Acabado** Finish
806	**WH**	Blanco brillo / Glossy White
517	**WL**	Nogal / Walnut

				€
1	2 un	**AU0013300R**		15,80
2		**AU0038500R**		20,50
4		**AU0017300R**		4,68
16		**AU01077WHR**	600 mm	115,00
		AU01077WLR		114,00
		AU01078WHR	800 mm	129,00
		AU01078WLR		128,00
		AU01079WHR	1000 mm	139,00
		AU01079WLR		141,00

Producto acabado compatible:
Compatible finished products:

			€
15	**A32799E000**	600 mm	-
	A32799C000	800 mm	-
	A32799B000	1000 mm	-
	A32799A000	1200 mm	-
18	**A857916...**	600 mm	-
	A857917...	800 mm	-
	A857918...	1000 mm	-

Optica

Mueble base de dos cajones / Base unit two drawers

UNIK: **MUEBLE BASE 2 CAJONES** Base unit 2 drawers	
A851982...	600 mm
A851983...	800 mm
A851984...	1000 mm

UNIK OCT: **MUEBLE BASE 2 CAJONES + ENCIMERA** Base unit 2 drawers + countertop	
A851986...	600 mm
A851987...	800 mm
A851988...	1000 mm

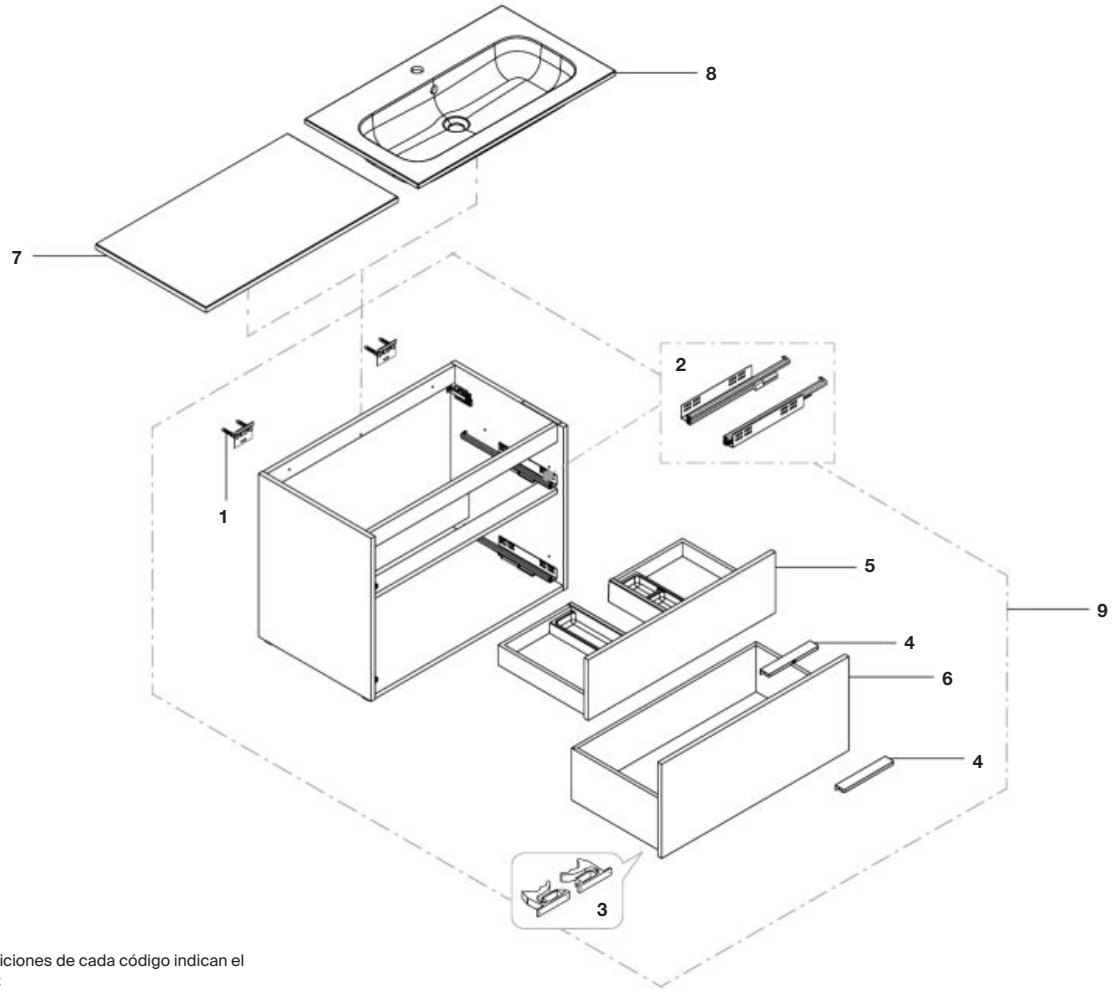

Las últimas posiciones de cada código indican el acabado (color):
The lasts positions indicates the finish (colour):

Producto Product	**Recambio** Spare Part	**Acabado** Finish
509	**MW**	Blanco mate / Matt White
551	**SB**	Azul acero / Steel Blue
517	**WL**	Nogal / Wallnut
537	**DO**	Roble oscuro / Dark Oak
541	**LA**	Fresno claro / Light Ash

Sólo se muestra el precio del acabado Blanco /
Only the price of the White finish is shown

				€
1	2 un	**AU0013300R**		15,80
2		**AU0038500R**		20,50
3		**AU0017300R**		4,68
4	2 un	**AU01039..R**		-
5		**AU01040..R**	600 mm	106,00
		AU01042..R	800 mm	111,00
		AU01044..R	1000 mm	127,00
6		**AU01041..R**	600 mm	78,00
		AU01043..R	800 mm	92,30
		AU01045..R	1000 mm	112,00

Producto acabado compatible:
Compatible finished products:

			€
7	**A857841...**	600 mm	-
	A857842...	800 mm	-
	A857843...	1000 mm	-
8	**A32752C000**	600 mm	-
	A32752B000	800 mm	-
	A32752A000	1000 mm	-
9	**A857838...**	600 mm	-
	A857839...	800 mm	-
	A857840...	1000 mm	-

Optica

Mueble base de dos cajones con lavabo / Two drawers vanity unit with washbasin

UNIK Optica STD: MUEBLE BASE 2 CAJONES + LAVABO VICTORIA Base unit 2 drawers + Victoria WB	
A852451...	600 mm
A852452...	700 mm
A852453...	800 mm
A852454...	1000 mm
A852455...	1200 mm (600 + 600)

PACK Optica: UNIK 2 CAJONES + ESPEJO + LUMINARIA UNIK 2 drawers + mirror + light	
A852459...	600 mm
A852460...	700 mm
A852461...	800 mm
A852462...	1000 mm
A852463...	1200 mm (600 + 600)

UNIK Optica Stonex: MUEBLE BASE 2 CAJONES + LAVABO STONEX Base unit 2 drawers + Stonex WB	
A851982...	600 mm
A851983...	800 mm
A851984...	1000 mm

UNIK Optica OTC: MUEBLE BASE 2 CAJONES + ENCIMERA + LAVABO SOBRE ENCIMERA Base unit 2 drawers + countertop + WB	
A851986...	600 mm
A851987...	800 mm
A851988...	1000 mm

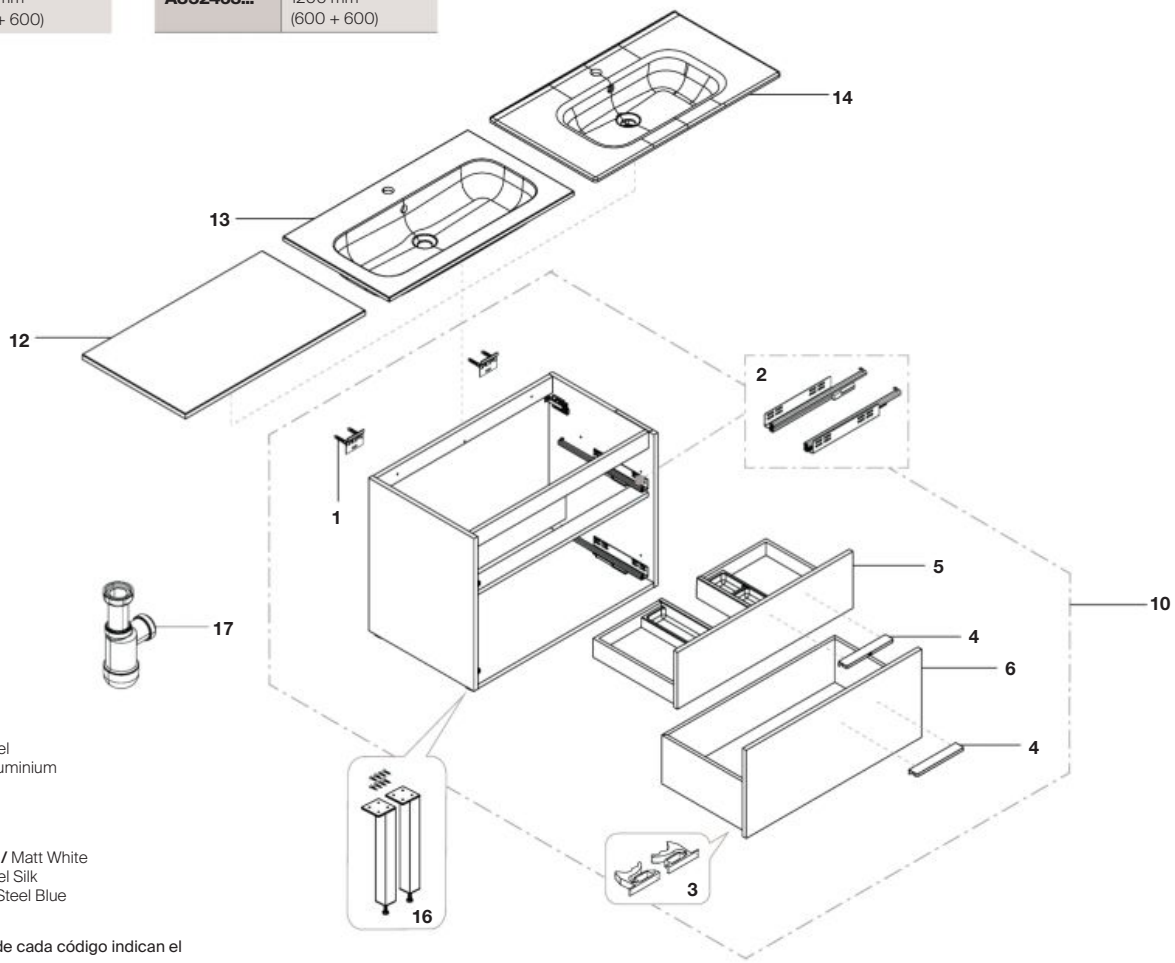

Acabados patas (16):
Legs finishes (16):
458 Níquel / Nickel
339 Aluminio / Aluminium

Acabados tiradores (4):
Handles finishes (4):
MW Blanco mate / Matt White
NS Níquel / Nickel Silk
SB Azul acero / Steel Blue

Las últimas posiciones de cada código indican el acabado (color):
The lasts positions indicates the finish (colour):

Producto Product	Recambio Spare Part	Acabado Finish
509	**MW**	Blanco mate / Matt White
551	**SB**	Azul acero / Steel Blue
517	**WL**	Nogal / Wallnut
537	**DO**	Roble oscuro / Dark Oak
541	**LA**	Fresno claro / Light Ash

				€
1	2 un	**AU0013300R**		15,80
2		**AU0038500R**		20,50
3		**AU0017300R**		4,68
4	2 un	**AU01046..R**		-
5		**AU01040..R**	600 mm	106,00
		AU01154..R	700 mm	110,00
		AU01042..R	800 mm	111,00
		AU01044..R	1000 mm	127,00
6		**AU01041..R**	600 mm	78,00
		AU01155..R	700 mm	86,80
		AU01043..R	800 mm	92,30
		AU01045..R	1000 mm	112,00

Producto acabado compatible:
Compatible finished products:

			€
10	**A857838...**	600 mm	-
	A857986...	700 mm	-
	A857839...	800 mm	
	A857840...	1000 mm	-
12	**A857841...**	600 mm	-
	A857842...	800 mm	-
	A857843...	1000 mm	-
13	**A2W8031000**	600 mm	-
	A2W8032000	800 mm	-
	A2W8033000	1000 mm	-

			€
14	**A32799E000**	600 mm	-
	A32799D000	700 mm	-
	A32799C000	800 mm	
	A32799B000	1000 mm	-
	A3279A0000	1200 mm	-
16	**A817018...**	285 mm	-
17	**A506406907**		-

Optica

Mueble base de tres cajones con lavabo / Three drawers vanity unit with washbasin

UNIK Optica: MUEBLE BASE 3 CAJONES + LAVABO VICTORIA Base unit 3 drawers + Victoria WB	
A852456...	600 mm
A852457...	800 mm
A852458...	1200 mm (600 + 600)

PACK Optica: UNIK 3 CAJONES + ESPEJO + LUMINARIA UNIK 3 drawers + mirror + light	
A851964...	600 mm
A851965...	800 mm
A851966...	1200 mm (600 + 600)

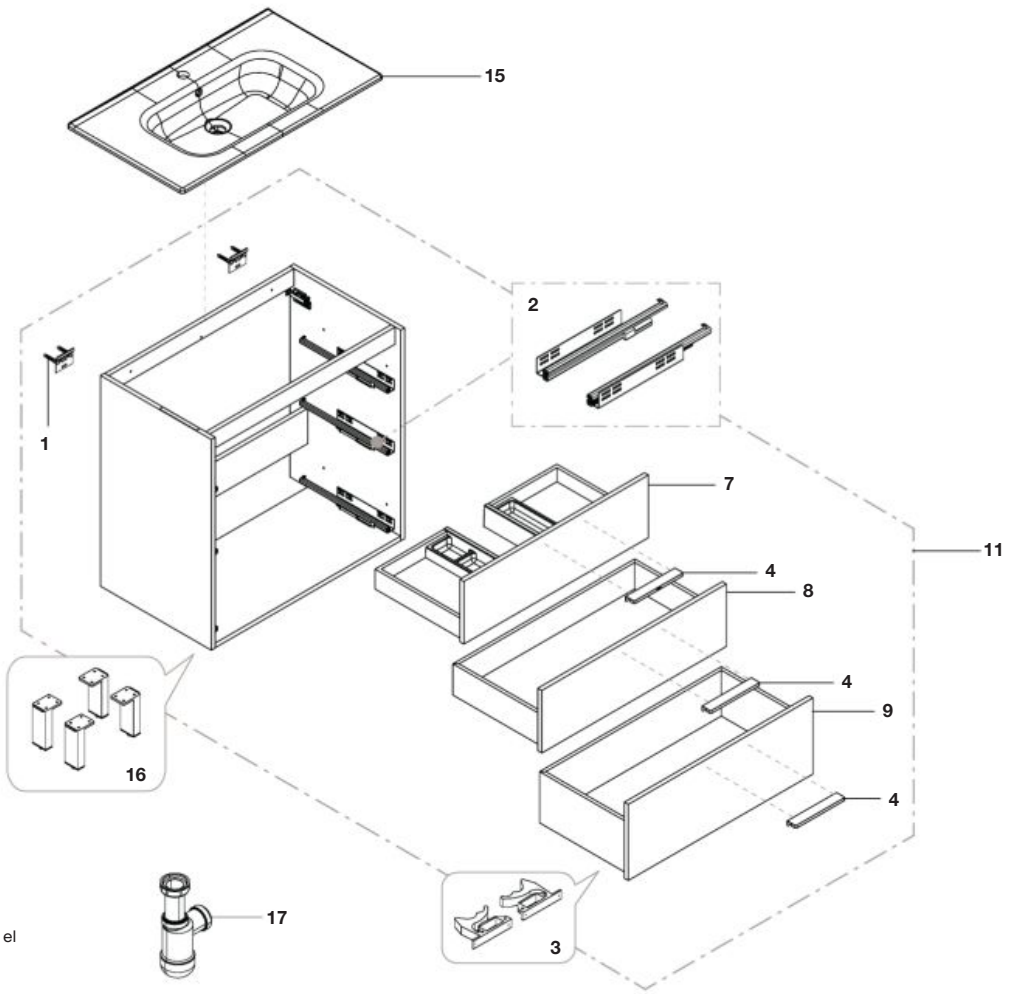

Acabados patas (16):
Legs finishes (16):
458 **Níquel /** Nickel
339 **Aluminio /** Aluminium

Acabados tiradores (4):
Handles finishes (4):
MW **Blanco mate /** Matt White
NS **Níquel /** Nickel Silk
SB **Azul acero /** Steel Blue

Las últimas posiciones de cada código indican el acabado (color):
The lasts positions indicates the finish (colour):

Producto Product	**Recambio** Spare Part	**Acabado** Finish
509	**MW**	**Blanco mate /** Matt White
551	**SB**	**Azul acero /** Steel Blue
517	**WL**	**Nogal /** Wallnut
537	**DO**	**Roble oscuro /** Dark Oak
541	**LA**	**Fresno claro /** Light Ash

				€
1	2 un	**AU0013300R**		15,80
2		**AU0038500R**		20,50
3		**AU0017300R**		4,68
4	2 un	**AU01046..R**		-
7		**AU01156..R**	600 mm	113,00
		AU01159..R	800 mm	118,00
8		**AU01157..R**	600 mm	73,20
		AU01160..R	800 mm	84,70
9		**AU01158..R**	600 mm	80,70
		AU01161..R	800 mm	89,50

Producto acabado compatible:
Compatible finished products:

			€
11	**A857984...**	600 mm	-
	A857985...	800 mm	-
15	**A32799E000**	600 mm	-
	A32799C000	800 mm	-
	A32799B000	1000 mm	-
	A32799A000	1200 mm	-
16	**A816827...**	285 mm	-
17	**A506406907**		-

Optica

Lavabo sobre encimera / Over countertop washbasin

LAVABO SOBRE ENCIMERA OPTICA Over countertop washbasin Optica	
A327B12000	350 x 350 mm
A327B12080	350 x 350 mm
A327B12620	350 x 350 mm
A327B15000	350 mm
A327C10000	450 x 300 mm
A327C12000	350 mm

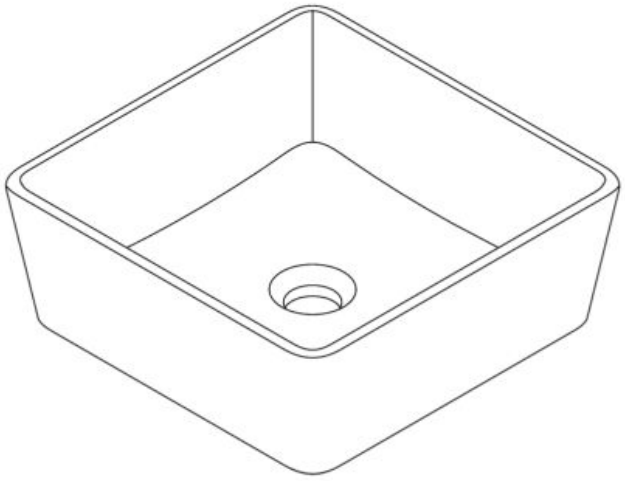

Admite / Admits

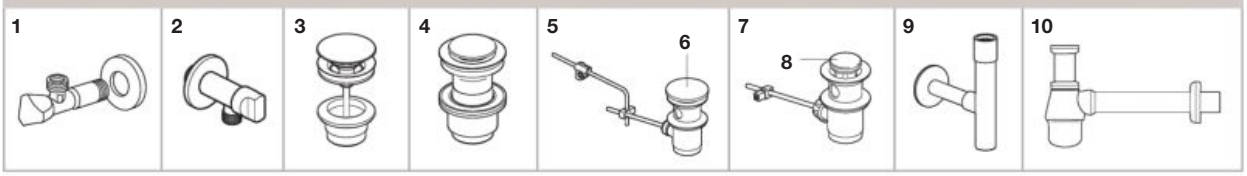

Las últimas posiciones de cada código indican el acabado (color):
The lasts positions indicates the finish (colour):

Producto Product	**Recambio** Spare Part	**Acabado** Finish
00	**00**	**Blanco brillo /** Glossy white
08 / NB	**NB / BM**	**Negro Mate /** Matt Black
62	**B0**	**Blanco Mate /** Matt White

				€
5	**AG0075400R**			33,80
	AG00754NBR		1 1/4"	-
	AG00754B0R			-
6	**AG0085700R**		Ø40	16,20
7	**AG0075300R**			28,80
	AG00753B0R		1 1/4"	32,30
	AG00753B0R			32,30
8	**AG0096200R**			7,48
	AG00962NBR		Ø40	22,10
	AG00962B0R			22,10
9	**A506403110**	Sifón Totem / Totem Trap		-
	A506403810	Sifón Minimal / Minimal Trap		111,00
10	**A506401614**			30,30

Producto acabado compatible:
Compatible finished products:

			€
1	**A525164400**	IN 1/2" – 3/8" OUT	-
2	**A525164500**	IN 1/2" – 1/2" OUT	-
3	**A505400900**	1 1/4"	-
4	**A505401000**	Cromado / Chromed	-
	A5054015..		

Optica

WC FS 630 dual vortex / WC FS 630 dual vortex

A342V16000

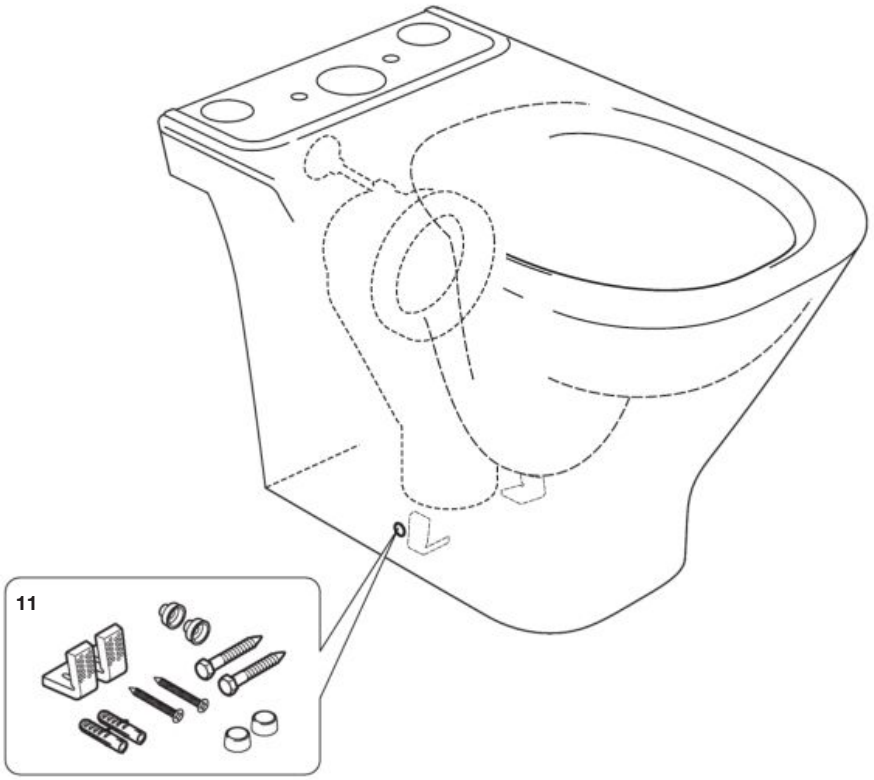

Admite / Admits

	13	14	15	16	17	1	2
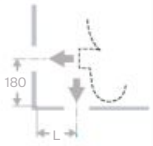							
L=			**150**	**210**			

		€
11	**AV0009400R**	6,16
13	**AV0009300R**	42,70
14	**AV0065500R**	11,00
15	**AV0007900R**	14,60
16	**AV0007700R**	14,60
17	**AV0035400R**	4,80

Producto acabado compatible:
Compatible finished products:

			€
1	**A525164400**	IN 1/2" – 3/8" OUT	-
2	**A525164500**	IN 1/2" – 1/2" OUT	-

Optica

WC FS 630 BTW dual vortex GR / WC FS 630 BTW dual vortex GR

A342V15000

Admite / Admits



L=			**150**	**210**			

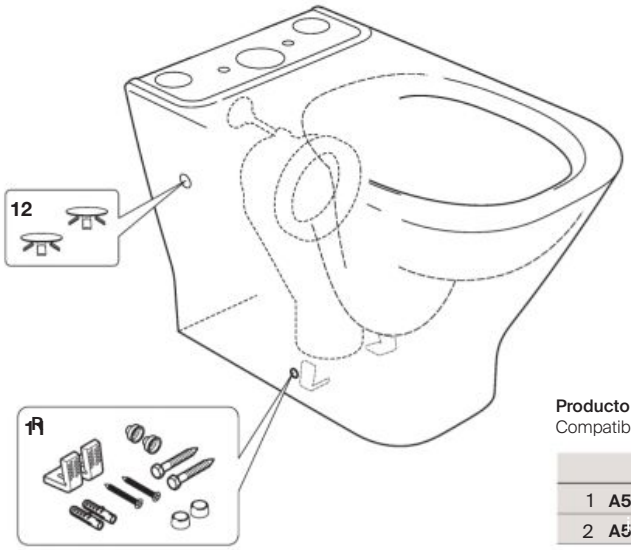

		€
11	**AV0009400R**	6,16
12	**AV0069400R**	1,55
13	**AV0009300R**	42,70
14	**AV0065500R**	11,00
15	**AV0007900R**	14,60
16	**AV0007700R**	14,60
17	**AV0035400R**	4,80

Producto acabado compatible:
Compatible finished products:

			€
1	**A525164400**	IN 1/2” – 3/8” OUT	-
2	**A525164500**	IN 1/2” – 1/2” OUT	-

WC FS 530 BTW dual vortex / WC FS 530 BTW dual vortex

A347V15000

Admite / Admits

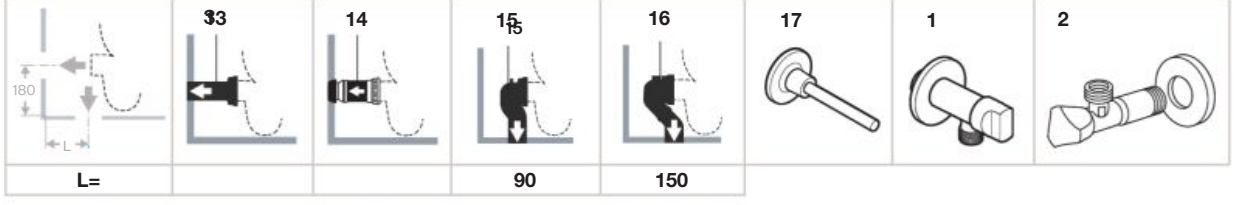

L=			**90**	**150**			

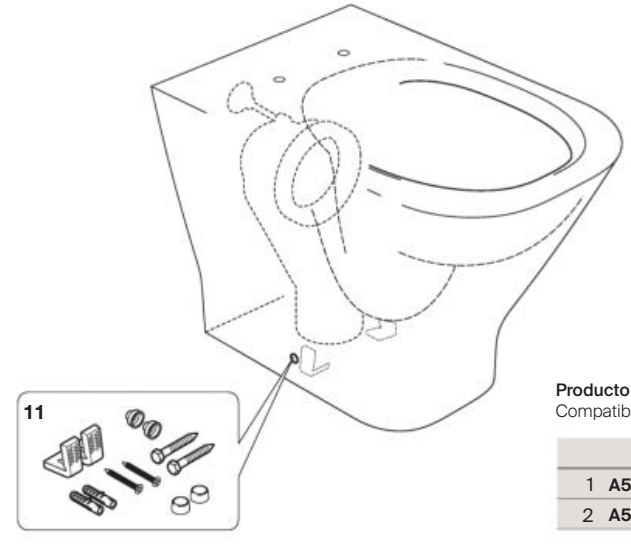

		€
11	**AV0009400R**	6,16
12	**AV0069400R**	1,55
13	**AV0009300R**	42,70
14	**AV0065500R**	11,00
15	**AV0007900R**	14,60
16	**AV0007700R**	14,60
17	**AV0035400R**	4,80

Producto acabado compatible:
Compatible finished products:

			€
1	**A525164400**	IN 1/2” – 3/8” OUT	-
2	**A525164500**	IN 1/2” – 1/2” OUT	-

Optica

WC Suspendido 530 vortex / Wall-hung WC 530 vortex

A346V13000

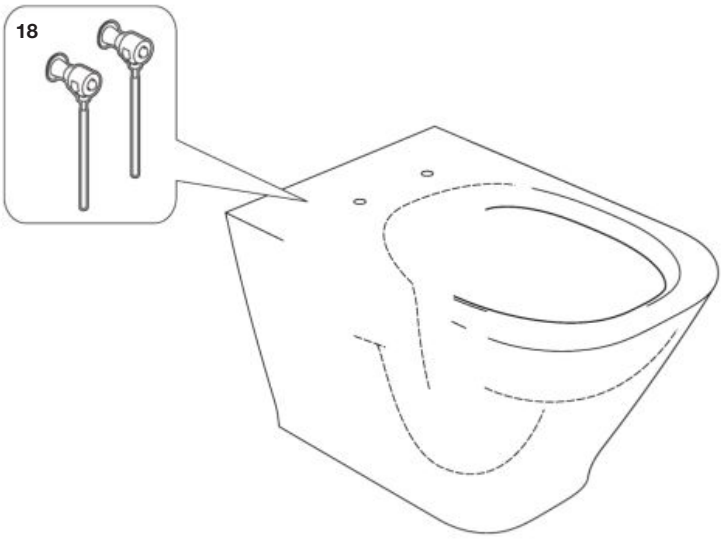

Adm e / Adm t

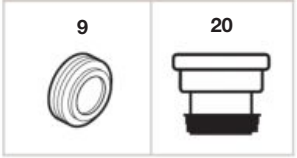

		€
18	**AV0069200R**	37,30
19	**AV0016200R**	2,63
20	**AV0007800R**	8,11
21	**AV0013500R**	14,40

WC Suspendido 530 vortex / Wall-hung WC 530 vortex

A346V14000

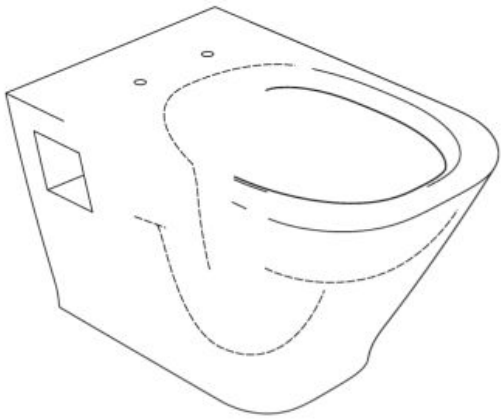

Admite / Admits

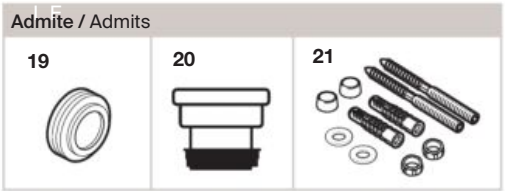

		€
18	**AV0069200R**	37,30
19	**AV0016200R**	2,63
20	**AV0007800R**	8,11
21	**AV0013500R**	14,40

Optica

Cisterna WC / WC cistern

ALIMENTACIÓN LATERAL Lateral inlet	
A341V10000	G 3/8 - 4,5/3 L

ALIMENTACIÓN INFERIOR Bottom inlet	
A341V11000	G 3/8 - 4,5/3 L
A341V1C000	G 1/2 - 4,5/3 L (UK)

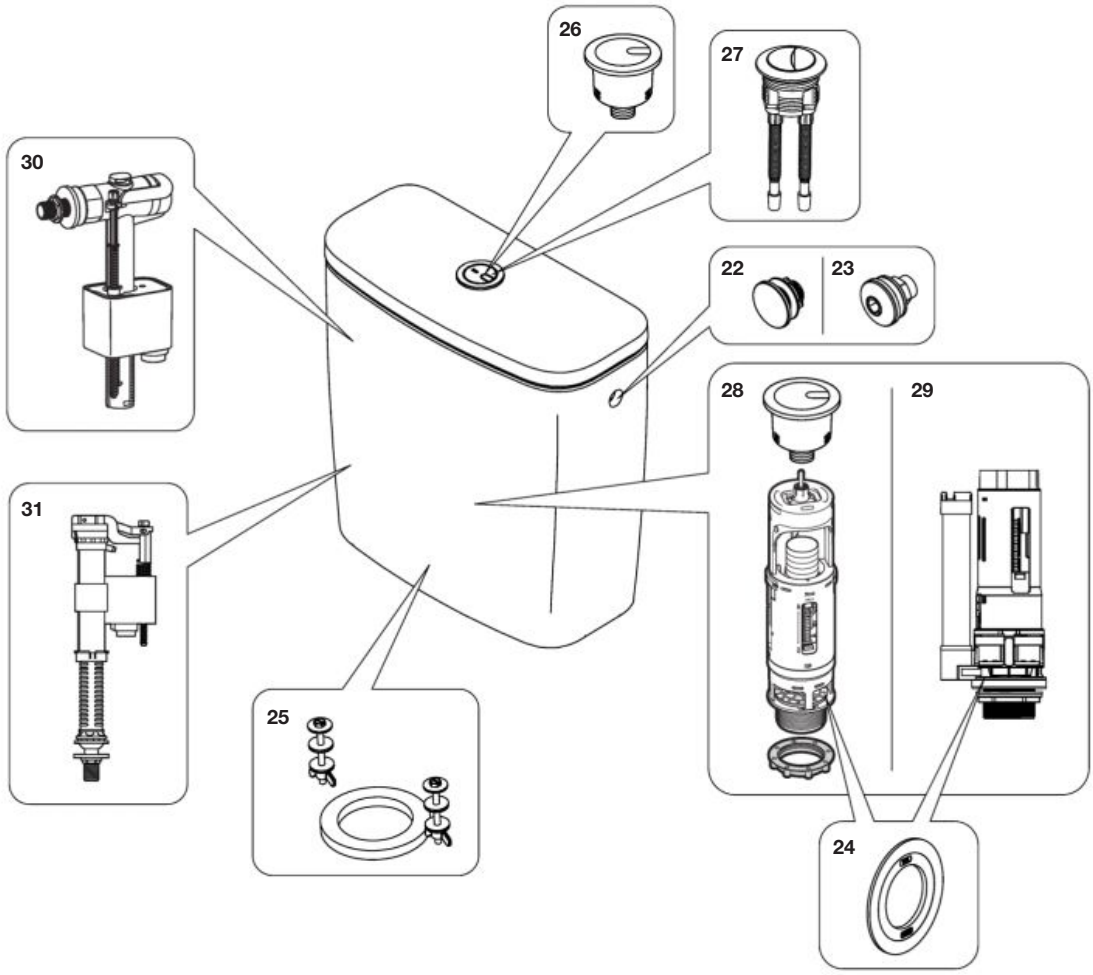

				€
22	2 un	**AV0060200R**		1,52
23		**AV0037100R**	UK	2,80
24		**AH0011400R**		6,42
		AH0019100R	UK	0,94
25		**AV0060500R**		8,85
26		**AH0011200R**		14,50
27		**AH0018800R**	UK	2,80

Producto acabado compatible:
Compatible finished products:

			€
28	**A822505500**		-
29	**A822505740**	UK	-
30	**A822504300**		
31	**A822504400**		
	A822505750	UK	

Optica

WC Suspendido 530 vortex / Wall-hung WC 530 vortex

A357V17000	
A357V18000	GR

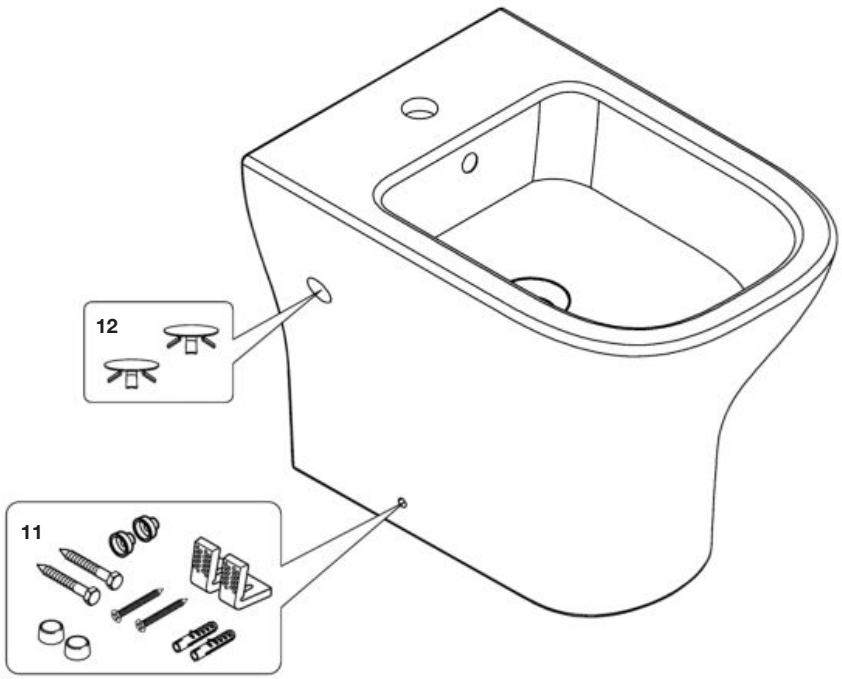

Admite / Admits



			€
11	**AV0009400R**		6,16
12	**AV0069400R**		1,55
18	**AV0069200R**		37,30
5	**AG0075400R**	1 1/4"	33,80
6	**AG0085700R**	Ø40	16,20
7	**AG0075300R**	1 1/4"	28,80
8	**AG0096200R**	Ø40	7,48
32	**A506401814**	Sifón Botella / Bottle Trap	27,50
33	**AV0051800R**	Sifón Curvo / Curve Trap	37,10
34	**A892808000**	Ø40	5,69

Producto acabado compatible:
Compatible finished products:

			€
1	**A525164400**	IN 1/2" – 3/8" OUT	-
2	**A525164500**	IN 1/2" – 1/2" OUT	-

Optica

WC Suspendido 530 vortex / Wall-hung WC 530 vortex

A35V1500

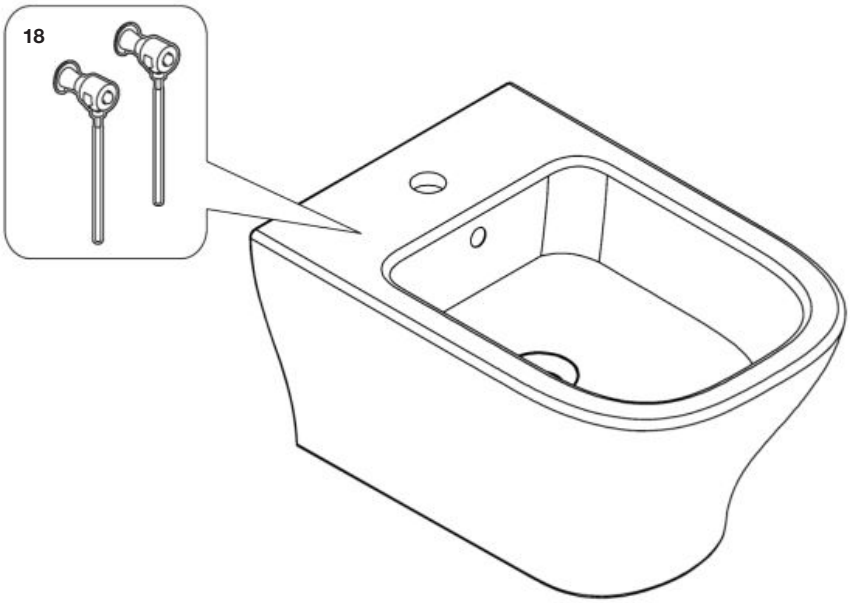

Admite / Admits

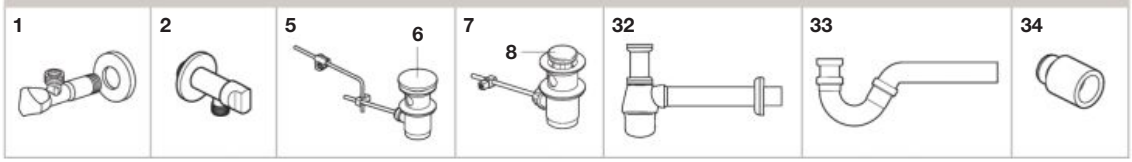

			€
11	**AV0009400R**		6,16
12	**AV0069400R**		1,55
18	**AV0069200R**		37,30
5	**AG0075400R**	1 1/4"	33,80
6	**AG0085700R**	Ø40	16,20
7	**AG0075300R**	1 1/4"	28,80
8	**AG0096200R**	Ø40	7,48
32	**A506401814**	Sifón Botella / Bottle Trap	27,50
33	**AV0051800R**	Sifón Curvo / Curve Trap	37,10
34	**A892808000**	Ø40	5,69

Producto acabado compatible:
Compatible finished products:

			€
1	**A525164400**	IN 1/2" – 3/8" OUT	-
2	**A525164500**	IN 1/2" – 1/2" OUT	-

Optica

WC Suspendido 530 vortex / Wall-hung WC 530 vortex

A801F72002	CR

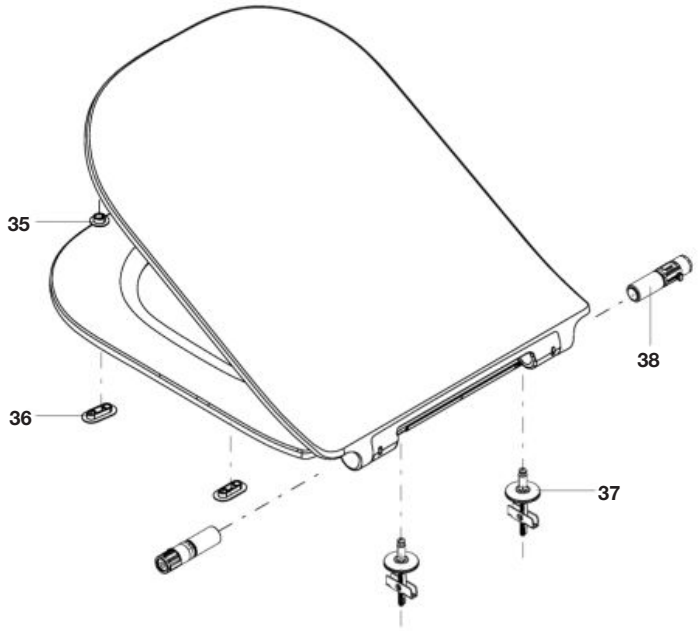

CR: Caída Retardada / Soft-closing

				€
35	2 un	**AI0026900R**		8,17
36	4 un	**AI0027000R**		8,17
37	2 un	**AI0025000R**		9,80
38		**AI0021100R**	1 1/4”	8,14

Asiento STD V6 / S&C STD V6

A801F70001	CL
A801F72001	CR

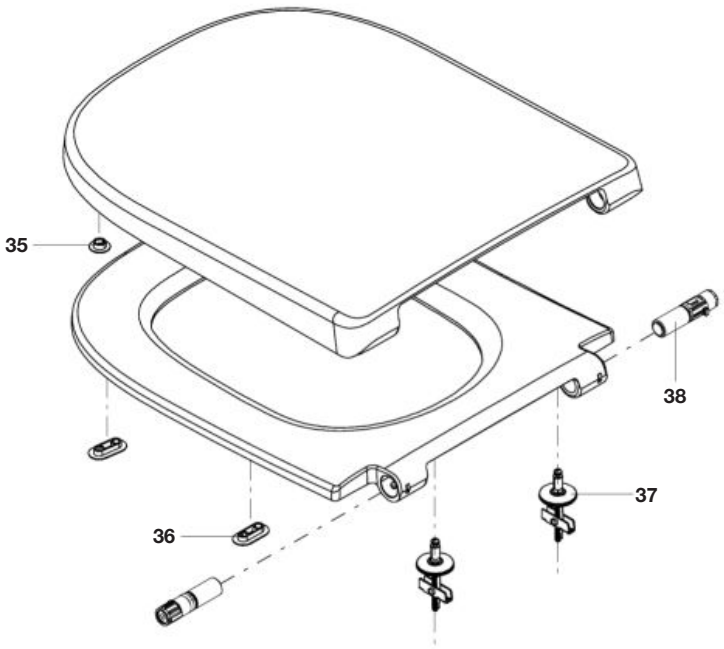

CR: Caída Retardada / Soft-closing
CL: Caída Libre / Standard closing

				€
35	2 un	**AI0026900R**		8,17
36	4 un	**AI0027000R**		8,17
37	2 un	**AI0025000R**		9,80
38		**AI0021100R**	1 1/4”	8,14

Optica

Asiento Bidé STD V6 / Bidet S&C STD V6

A806F70001	CL
A806F72001	CR

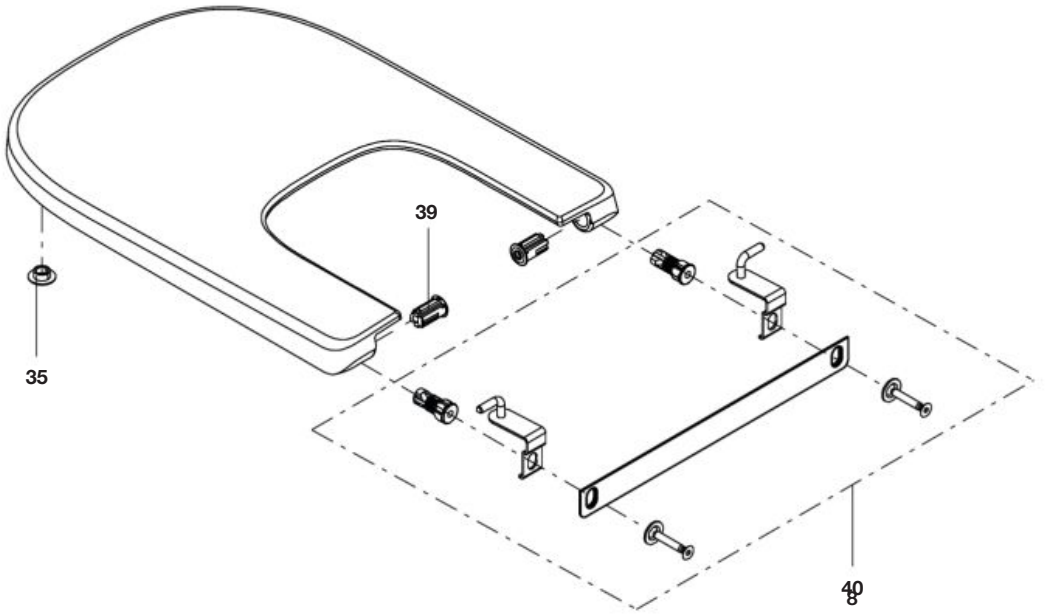

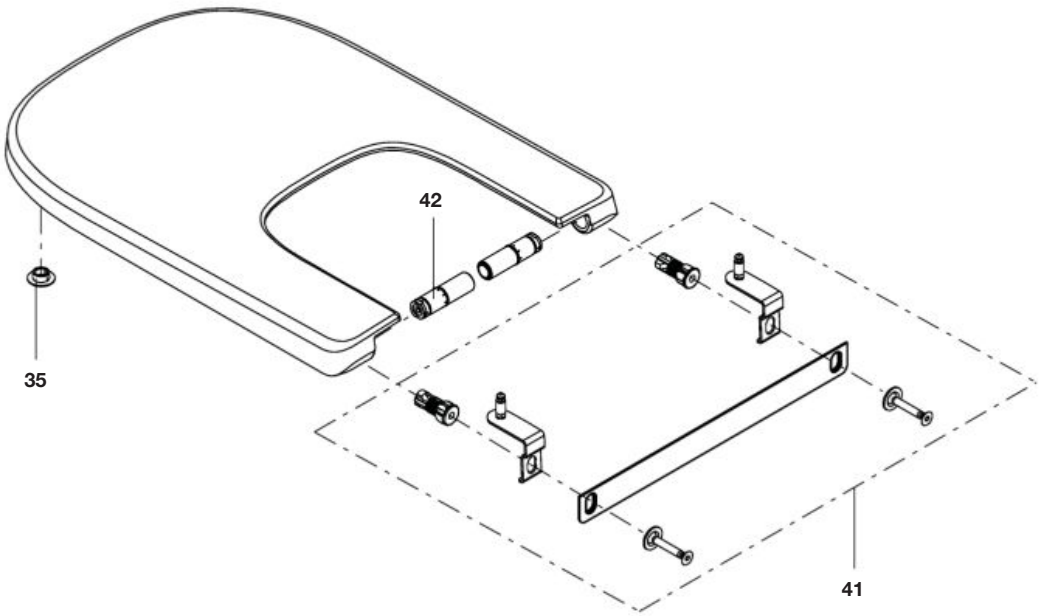

CR: Caída Retardada / Soft-closing
CL: Caída Libre / Standard closing

			€
35	2 un	**AI0026900R**	8,17
39	2 un	**AI0025600R**	2,80
40		**AI0029300R**	45,80
41		**AI0029400R**	67,90
42		**AI0025800R**	8,72

Romea

Mueble base de dos cajones con lavabo / Two drawers vanity unit with washbasin

UNIK: MUEBLE BASE 2 CAJONES + LAVABO Base unit 2 drawers with washbasin	
A851581...	600 mm
A851582...	800 mm
A851583...	1000 mm

PACK: UNIK MUEBLE 2 CAJONES + ESPEJO Unik Domi 2 drawers + mirror	
A851587...	600 mm
A851589...	800 mm
A851591...	1000 mm

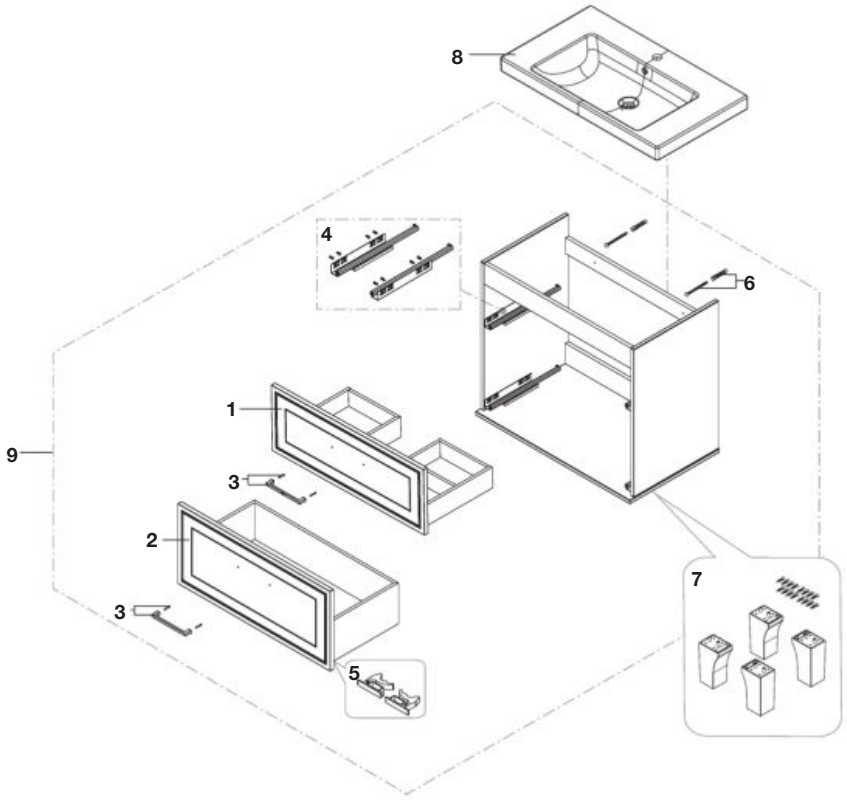

Espejo con marco / Framed mirror

ESPEJO Mirror	
A812384...	600 mm
A812383...	800 mm
A812382...	1000 mm

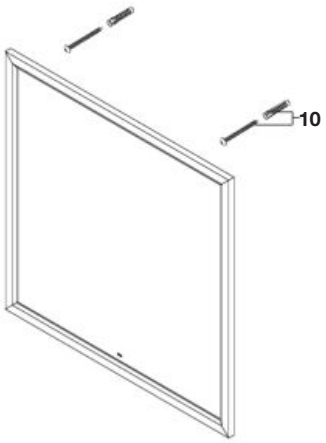

Las últimas posiciones de cada código indican el acabado (color):
The lasts positions indicates the finish (colour):

Producto Product	**Recambio** Spare Part	**Acabado** Finish
415	**WM**	Blanco satinado / Satin white
417	**DG**	Gris oscuro / Dark grey

				€
1	**AU00800WMR**	600 mm	110,00
	AU00800DGR		109,00
	AU00799WMR	800 mm	135,00
	AU00799DGR		125,00
	AU00802WMR	1000 mm	147,00
	AU00802DGR		145,00
2	**AU00804WMR**	600 mm	110,00
	AU00804DGR		109,00
	AU00805WMR	800 mm	125,00
	AU00805DGR		124,00
	AU00806WMR	1000 mm	147,00
	AU00806DGR		145,00

			€
3	3 un	**AU0080300R**	61,00
4		**AU0038500R**	20,50
5		**AU0017300R**	4,68
6	2 un	**AU0080700R**	12,10
7	4 un	**AU00808WMR**	47,30
		AU00808DGR	47,30
10	2 un	**AU0080900R**	12,50

Sólo se muestra el precio del acabado Blanco /
Only the price of the White finish is shown

Producto acabado compatible:
Compatible finished products:

			€
8	**A3270M1004**	600 mm	-
	A3270M0004	800 mm	-
	A3270MA004	1000 mm	-
9	**A857490417**	600 mm	-
	A857490415		-
	A857491417	800 mm	-
	A857491415		-
	A857492417	1000 mm	-
	A857492415		-

Domi

Mueble base de dos cajones con lavabo / Two drawers vanity unit with washbasin

UNIK: MUEBLE BASE 2 CAJONES + LAVABO Base unit 2 drawers with washbasin	
A851626...	550 mm
A851545...	600 mm
A851546...	800 mm

PACK: UNIK DOMI 2 CAJONES + ESPEJO Unik Domi 2 drawers + mirror	
A851631...	550 mm
A851538...	600 mm
A851539...	800 mm

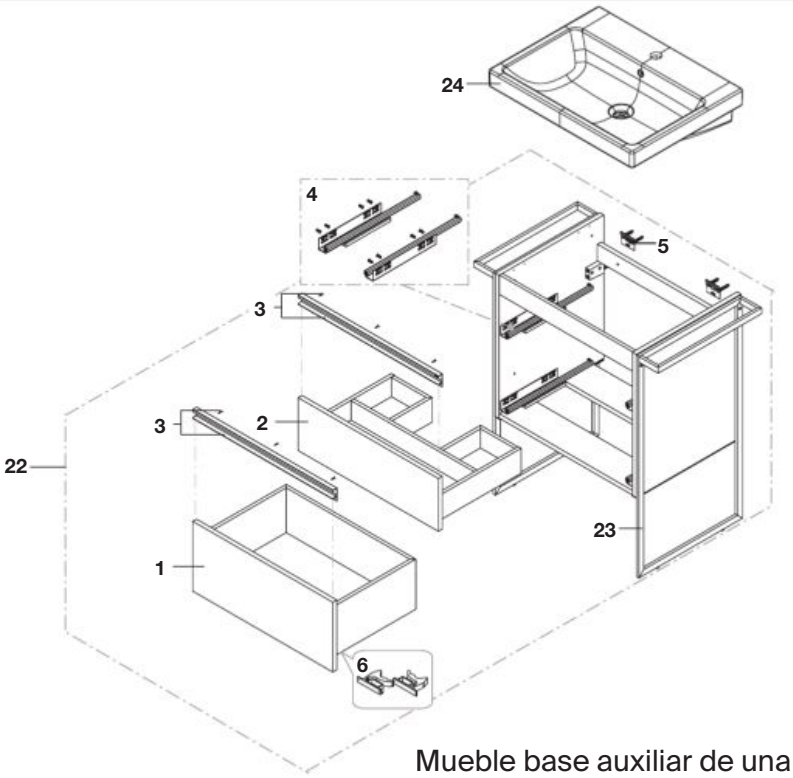

Estructura con toallero / Towerholder legs

PATA + PATA CON TOALLERO Leg & Towerholder Leg	
A816831485	Pata con toallero / Towerholder Leg
A816830485	Pata / Leg

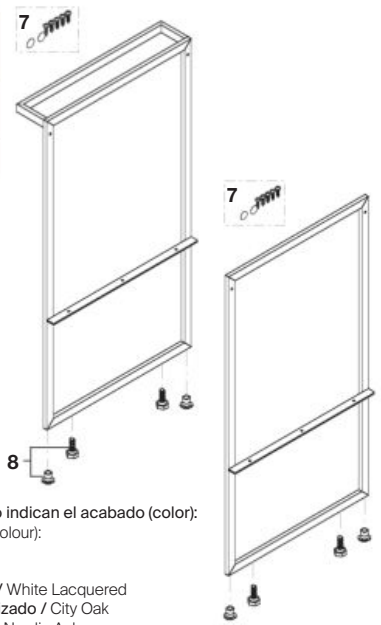

Las últimas posiciones de cada código indican el acabado (color):
The lasts positions indicates the finish (colour):

Producto Product	Recambio Spare Part	Acabado Finish
806	WH	Blanco brillante / White Lacquered
402	OA	Roble city texturizado / City Oak
434	AS	Fresno nórdico / Nordic Ash
447	GM	Gris ártico / Matt Grey

Mueble base auxiliar de una puerta / Auxiliary one door unit

MUEBLE AUXILIAR 1 PUERTA Auxiliar unit 1 door	
A857487...	400 mm

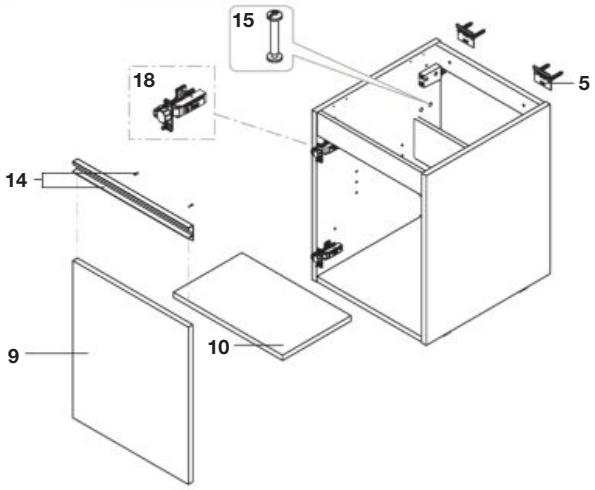

Sólo se muestra el precio del acabado Blanco /
Only the price of the White finish is shown

				€
1		**AU00773..R**	550 mm	121,00
		AU00759..R	600 mm	121,00
		AU00772..R	800 mm	134,00
2		**AU00775..R**	550 mm	151,00
		AU00760..R	600 mm	150,00
		AU00774..R	800 mm	170,00
	2 un	**AU00899MBR**	550 mm	92,20
3	2 un	**AU0076100R**	600 mm	70,50
	2 un	**AU0077700R**	800 mm	95,80
4		**AU0038500R**		20,50

			€
5	2 un	**AU0013300R**	15,80
6		**AU0017300R**	4,68
7	2 un	**AU0076200R**	2,23
8	4 un		
9		**AU00764..R**	24,20
10		**AU00765..R**	7,90
14		**AU0076800R**	29,80
15	5 un	**AU0020900R**	14,80
18	2 un	**AU0067200R**	43,30

Producto acabado compatible:
Compatible finished products:

			€
	A857525...	550 mm	-
22	**A857458...**	600 mm	-
	A857459...	800 mm	-
23	**A816831485**		-
	A3270MV004	550 mm	-
24	**A3270M1004**	600 mm	-
	A3270M0004	800 mm	-

Domi

Mueble base de dos cajones y una puerta con lavabo derecho y estructuras
Two drawers and one door vanity unit with right hand washbasin and structure

UNIK: MUEBLE BASE 2 CAJONES DERECHA Base unit 2 drawers RH	
A851548...	1000 mm

PACK: MUEBLE 2 CAJONES DCH + ESPEJO Unik Domi 2 drawers RH + mirror	
A851541...	1000 mm

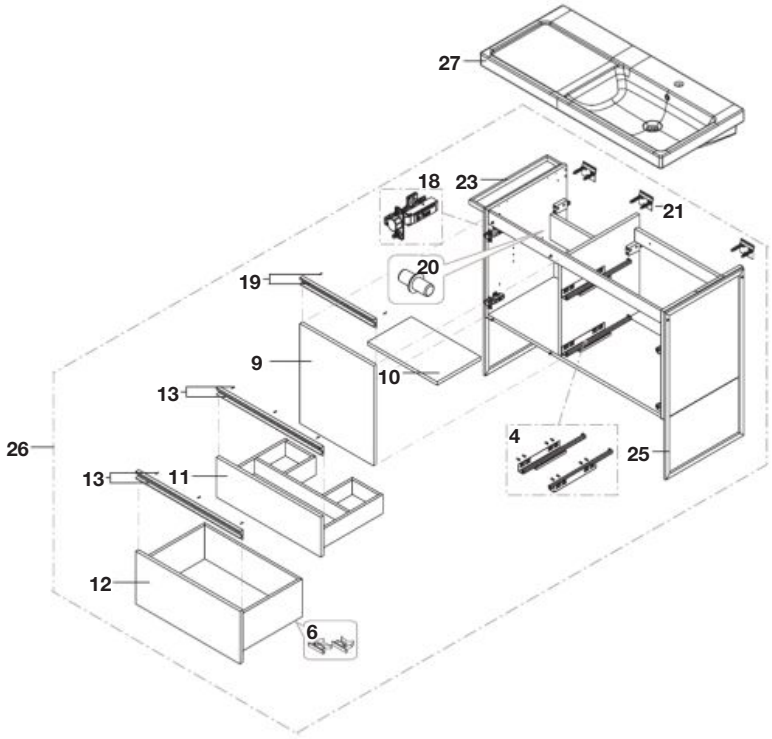

Mueble base de dos cajones y una puerta con lavabo izquierdo y estructuras
Two drawers and one door vanity unit with leftt hand washbasin and structure

UNIK: MUEBLE BASE 2 CAJONES IZQUIERDA Base unit 2 drawers LH	
A851547...	1000 mm

PACK: MUEBLE 2 CAJONES IZQ + ESPEJO Unik Domi 2 drawers LH+ mirror	
A851543...	1000 mm

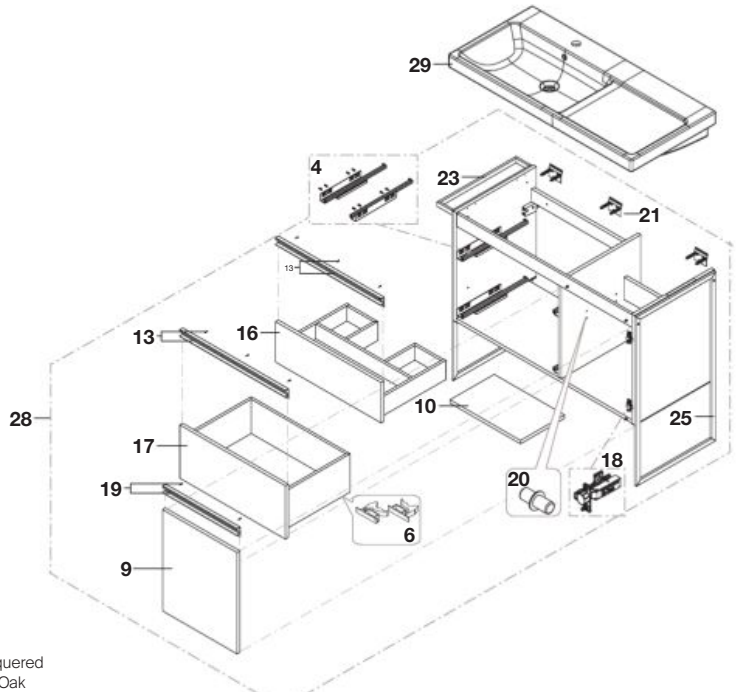

Las últimas posiciones de cada código indican el acabado (color):
The lasts positions indicates the finish (colour):

Producto Product	**Recambio** Spare Part	**Acabado** Finish
806	**WH**	**Blanco brillante /** White Lacquered
402	**OA**	**Roble city texturizado /** City Oak
434	**AS**	**Fresno nórdico /** Nordic Ash
447	**GM**	**Gris ártico /** Matt Grey

Sólo se muestra el precio del acabado Blanco /
Only the price of the White finish is shown

			€
4		**AU0038500R**	20,50
6		**AU0017300R**	4,68
9		**AU00764..R**	24,20
10		**AU00765..R**	7,90
11		**AU00766..R**	148,00
12		**AU00758..R**	121,00
13	2 un	**AU0076700R**	81,20
16		**AU00769..R**	148,00
17		**AU00770..R**	121,00
18	2 un	**AU0067200R**	43,30
19		**AU0076800R**	29,80
20	4 un	**AU0013900R**	8,63
21	3 un	**AU0041300R**	12,90

Producto acabado compatible:
Compatible finished products:

		€
23	**A816831485**	-
25	**A816830485**	-
26	**A857478...**	-
27	**A3270ME004**	-
28	**A857477...**	-
29	**A3270MB004**	-

Anima

Mueble base de dos cajones y una puerta con lavabo / Two drawers and one door vanity unit with washbasin

UNIK: MUEBLE BASE 2 CAJONES, UNA PUERTA + LAVABO ANIMA Base unit and washbasin	
A851029...	600 mm
A851030...	800 mm
A851031...	1000 mm

PACK: UNIK ANIMA + ESPEJO + APLIQUE LED Delight UNIK Anima + mirror + LED Delisght	
A851033...	600 mm
A851034...	800 mm
A851035...	1000 mm

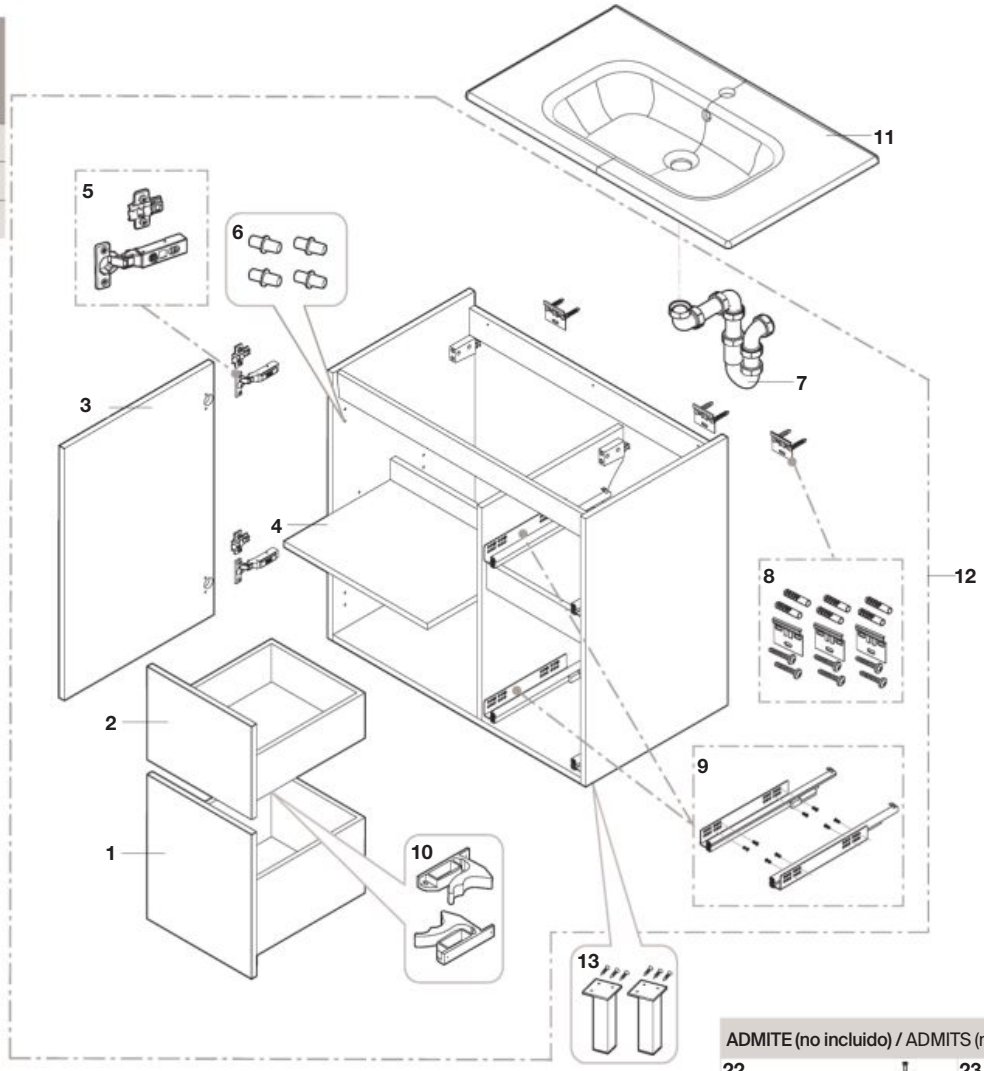

ADMITE (no incluido) / ADMITS (not included)

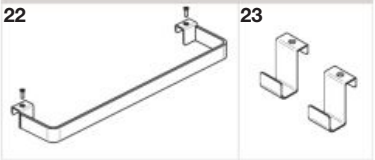

Las últimas posiciones de cada código indican el acabado (color):
The lasts positions indicates the finish (colour):

Producto Product	**Recambio** Spare Part	**Acabado** Finish
806	**WH**	Blanco / White
153	**GA**	Gris antracita / Grey Anthracite
156	**SG**	Gris arena / Sand Grey

				€
1	**AU00290WHR**	600 mm		34,30
	AU00290GAR			35,30
	AU00290SGR			29,50
	AU00293WHR	800 mm		40,70
	AU00293GAR			43,30
	AU00293SGR			34,20
	AU00296WHR	1000 mm		42,80
	AU00296GAR			45,80
	AU00296SGR			39,70
2	**AU00289WHR**	600 mm		34,70
	AU00289GAR			35,70
	AU00289SGR			23,70
	AU00292WHR	800 mm		31,30
	AU00292GAR			33,20
	AU00292SGR			27,30
	AU00295WHR	1000 mm		54,00
	AU00295GAR			35,20
	AU00295SGR			31,20

				€
3	**AU00288WHR**	600 mm		36,00
	AU00288GAR			41,50
	AU00288SGR			29,80
	AU00291WHR	800 mm		44,30
	AU00291GAR			47,50
	AU00291SGR			35,70
	AU00294WHR	1000 mm		48,70
	AU00294GAR			N.D.
	AU00294SGR			41,00
4	**AU00297WHR**	600 mm		N.D.
	AU00297GAR			13,10
	AU00297SGR			17,50
	AU00298WHR	800 mm		12,00
	AU00298GAR			15,50
	AU00298SGR			21,00
	AU00299WHR	1000 mm		13,80
	AU00299GAR			10,30
	AU00299SGR			24,30

			€
5	2 un	**AU0067200R**	43,30
6		**AU0013900R**	8,63
7		**AU0028600R**	20,50
8		**AU0041300R**	12,90
9		**AU0017600R**	54,30
10		**AU0017300R**	4,68

Producto acabado compatible:
Compatible finished products:

				€
11	**A32799E000**	600 mm		-
	A32799C000	800 mm		-
	A32799B000	1000 mm		-
12	**A856927...**	600 mm		-
	A856928...	800 mm		-
	A856929...	1000 mm		-
13	**A816757339**			-
22	**A816760001**			-
23	**A816761001**			-

Anima

Columna de dos puertas / Two doors column

A856931...	1500 mm

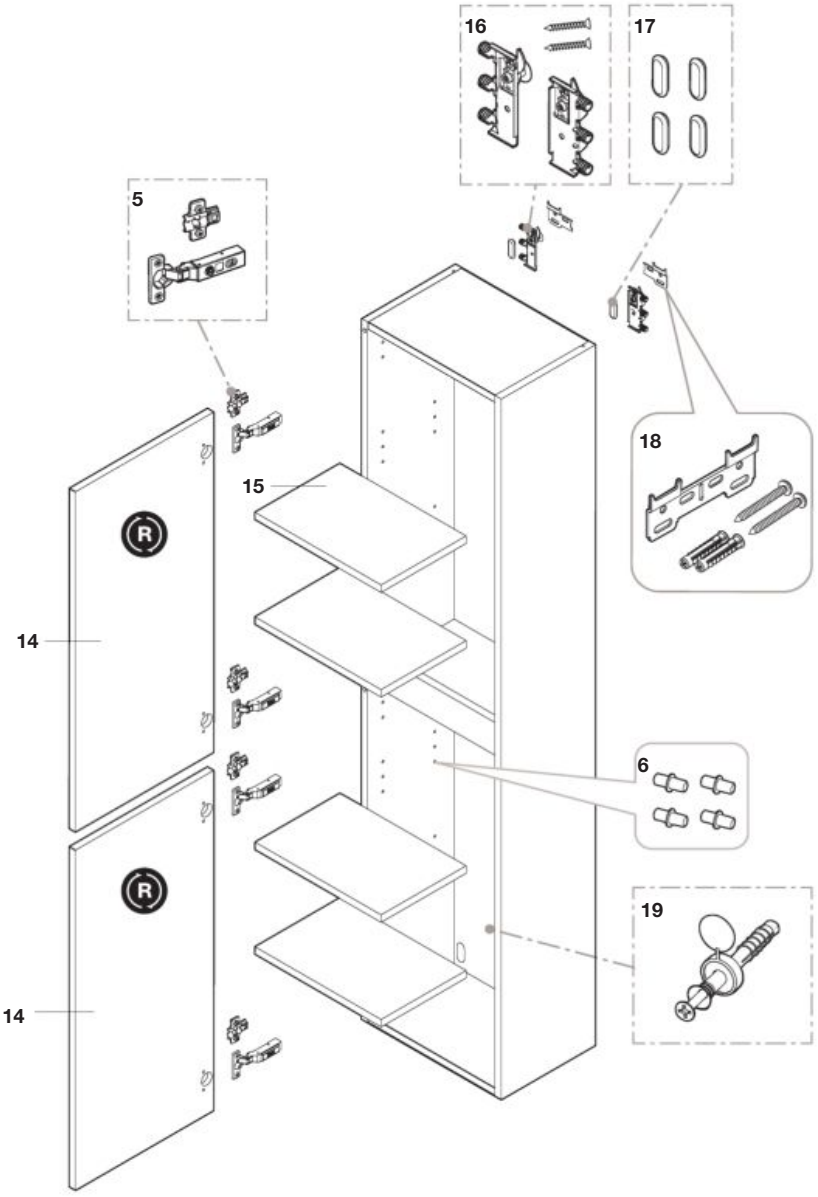

Las últimas posiciones de cada código indican el acabado (color):
The lasts positions indicates the finish (colour):

Producto Product	**Recambio** Spare Part	**Acabado** Finish
806	**WH**	Blanco brillante / White Lacquered
402	**OA**	Roble city texturizado / City Oak
434	**AS**	Fresno nórdico / Nordic Ash
447	**GM**	Gris ártico / Matt Grey

			€
5	2 un	**AU0067200R**	43,30
6		**AU0013900R**	8,63
14		**AU00287GAR**	42,00
		AU00287SGR	32,70
		AU00287WHR	37,70
15		**AU00160GAR**	13,20
		AU00160SGR	10,50
		AU00160WHR	N.D.
16		**AU0013700R**	16,30
17			
17		**AU0013700R**	16,30
18		**AU0013800R**	12,10
19			

Mini

Mueble base de una puerta / One door vanity unit

A855865...	Pack Espejo / Mirror set
A855866...	Pack Armario Espejo / Mirror cabinet set
A856690...	Vanity Unit

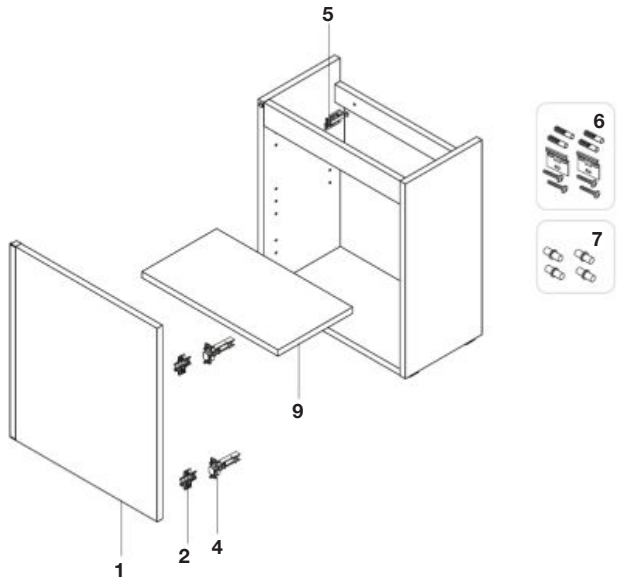

Armario - Espejo / Mirror cabinet

A856692...

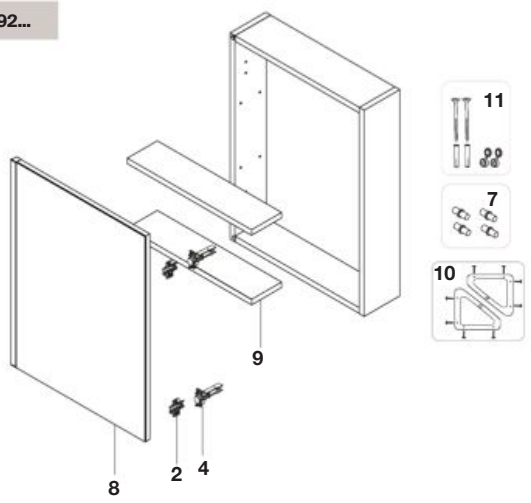

Espejo / Mirror

A856698000

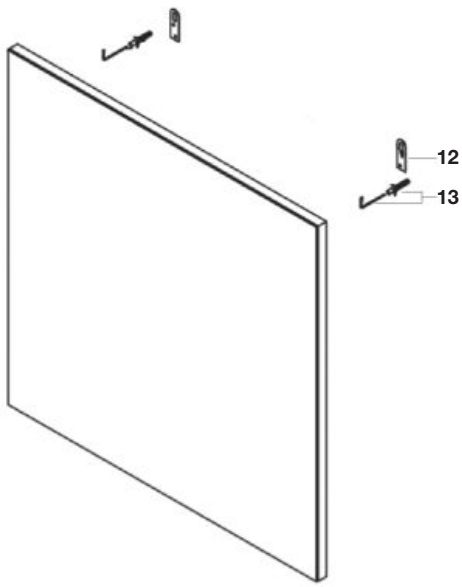

Las últimas posiciones de cada código indican el acabado (color):
The lasts positions indicates the finish (colour):

Producto Product	Recambio Spare Part	Acabado Finish
806	**06**	**Blanco** / White
155	**55**	**Roble** / Oak
156	**53**	**Gris arenado** / Sand Grey
154	**54**	**Wenge** / Wenge

			€
1		**AU0010606R**	63,70
		AU0010653R	58,50
		AU0010654R	N.D.
		AU0010655R	57,30
2		**AU0011900R**	14,30

			€
3		**AU0010754R**	N.D.
		AU0010755R	N.D.
		AU0010753R	N.D.
		AU0010706R	N.D.
4		**AU0011800R**	6,98
5	2 un	**AU0004900R**	10,50

			€
6		**AU0013300R**	15,80
7		**AU0013900R**	8,63
8		**AU0010906R**	N.D.
		AU0010953R	N.D.
		AU0010954R	N.D.
		AU0010955R	N.D.

			€
9		**AU0011000R**	N.D.
10		**AU0011100R**	10,10
11		**AU0011200R**	10,10
12	2 un	**AU0004500R**	5,23
13	2 un	**AU0005200R**	5,23

Mini Pro

Mueble base CPT 1 puerta / Base unit CPT 1 door with washbasin

UNIK: MUEBLE BASE CTP 1 PUERTA Base unit CTP 1 door	
A852008...	450 mm

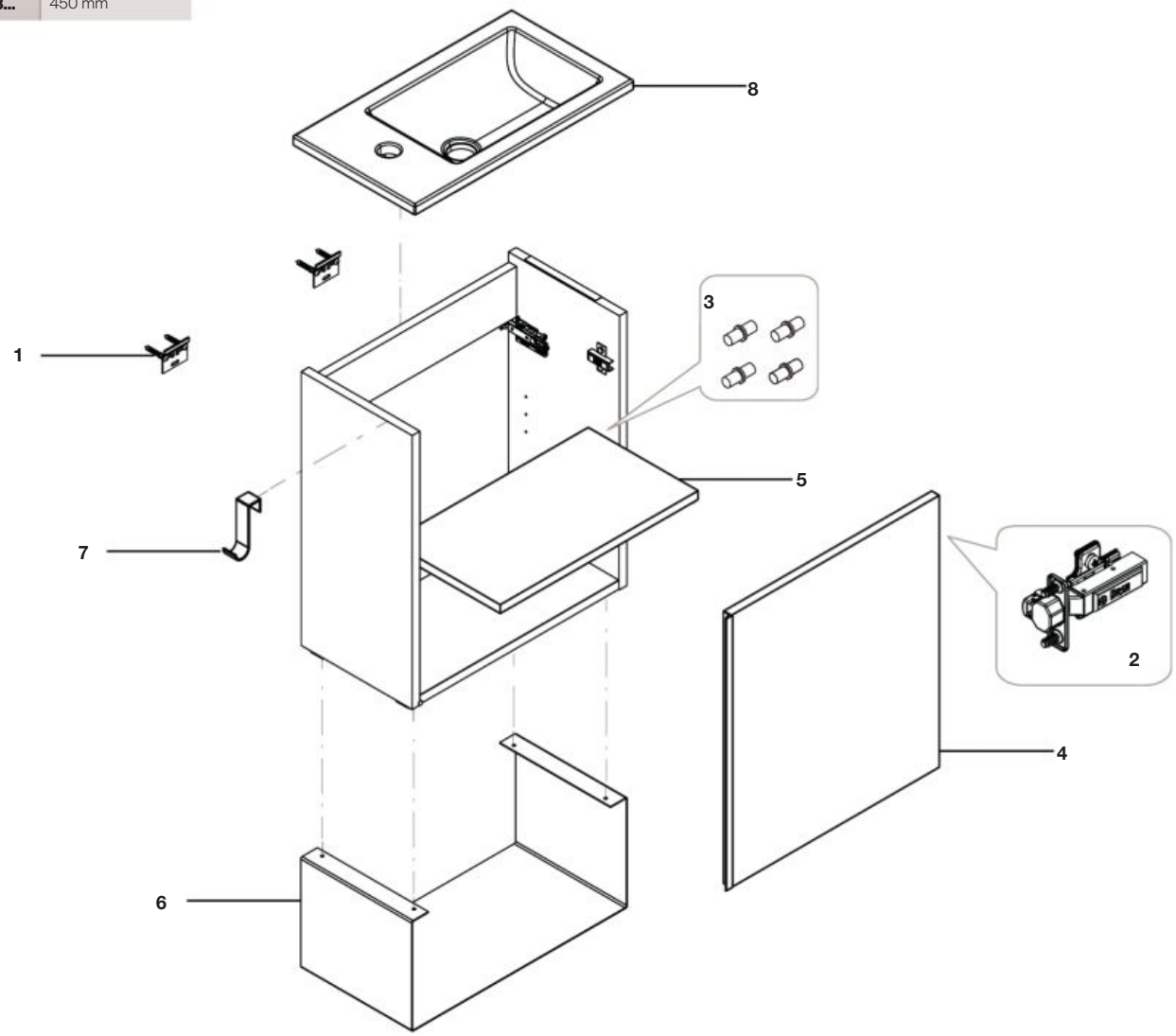

Las últimas posiciones de cada código indican el acabado (color):
The lasts positions indicates the finish (colour):

Producto Product	**Recambio** Spare Part	**Acabado** Finish
806	**WH**	Blanco brillo / Glossy white
549	**RR**	Roble Occidente / Western Oak
422	**BI**	Abedul / Birch
523	**MB**	Negro mate / Matt Black
550	**CG**	Gris Cemento / Concrete Grey

Acabados internos:
Interior finishes:

Recambio Spare part	Acabado Finished
WH	Blanco / White
GJ	Gris Rioja / Grey Melamine

			€
1	2 un	**AU0013300R**	15,80
2	2 un	**AU0089500R**	18,00
3	4 un	**AU0102600R**	3,62
4		**AU01027WHR**	82,70
		AU01027RRR	80,80
		AU01027BIR	80,70
		AU01027MBR	88,20
		AU01027CGR	79,50

		€
5	**AU01028WHR**	102,00
	AU01028RRR	-
	AU01028BIR	-
	AU01028MBR	12,30
	AU01028CGR	-
6	**AU0102900R**	159,00
7	**AU0103000R**	8,17

Producto acabado compatible:
Compatible finished products:

			€
8	**A327RBC000**	450 mm	-

Extra

Columna de dos puertas / Two doors columns

COLUMNA 2 PUERTAS Column 2 doors	
A857702...	350 mm

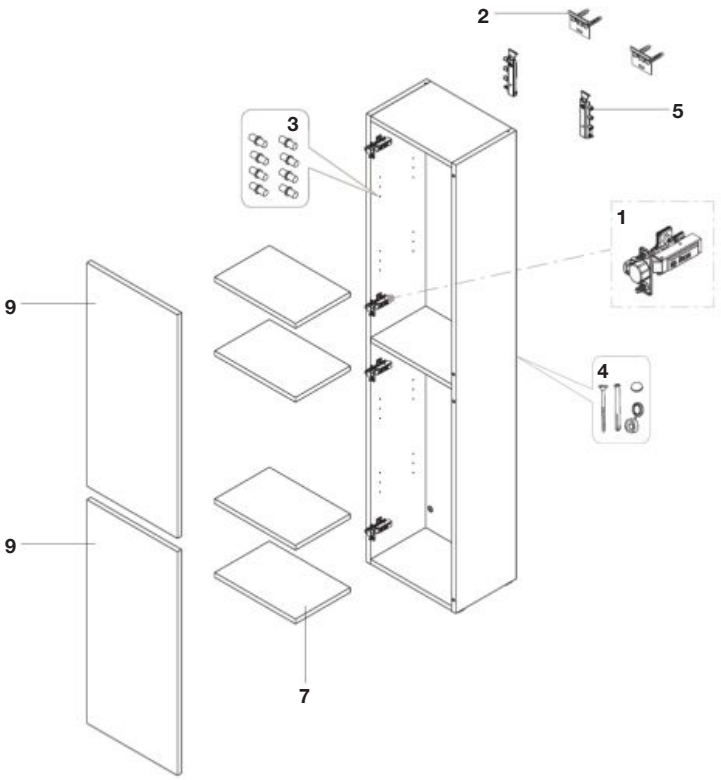

Columna alta de una puerta / Top column

COLUMNA ALTA 1 PUERTA Top column 1 door	
A857703...	350 mm

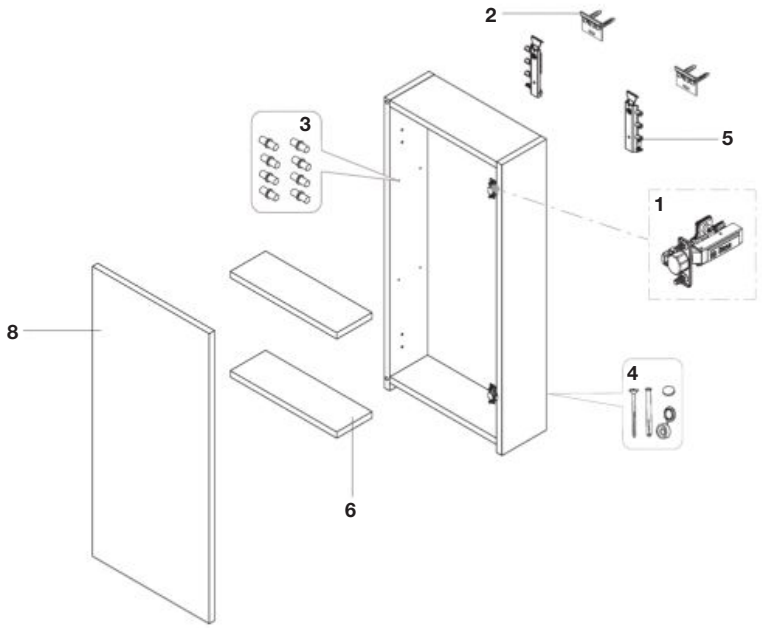

Las últimas posiciones de cada código indican el acabado (color):
The lasts positions indicates the finish (colour):

Producto Product	**Recambio** Spare Part	**Acabado** Finish
806	**WH**	**Blanco brillante /** White Lacquered
402	**CO**	**Roble city texturizado /** City Oak
434	**AS**	**Fresno nórdico /** Nordic Ash
516	**LG**	**Gris claro brillante /** Glossy Light Grey
517	**WL**	**Nogal /** Walnut
509	**MW**	**Blanco mate /** Matt White
514	**ML**	**Gris claro mate /** Matt Light Grey
523	**MB**	**Negro mate /** Matt Black
524	**BN**	**Beige madera /** Beige Natural
525	**WN**	**Blanco madera /** White Natural
422	**BI**	**Abedul /** Birch
153	**AG**	**Gris antracita brillo /** Gloss Anthracite Grey
447	**GY**	**Gris ártico /** Matt Light Grey
551	**SB**	**azul acero /** Steel blue
547	**GM**	**Gris mate /** Matt Grey
537	**DO**	**Roble oscuro /** Dark oak
541	**LA**	**Fresno claro /** Light Ash
548	**AM**	**Azul mate /** Matt Blue
580	**OB**	**Azul océano /** Ocean Blue

Acabados internos:
Interior finishes:

Producto Product	**Recambio** Spare Part	**Acabado** Finish
314	**WH**	Blanco / White
418	**TO**	Tortora / Tortora Grey

			€/un
1	2 un	**AU0089500R**	18,00
2		**AU0092200R**	10,70
3	8 un	**AU0091500R**	4,55
4		**AU0004200R**	10,50
5		**AU0091900R**	15,00

				€/un
6		**AU00916..R**		12,40
7		**AU00917..R**		19,00
8		**AU00920..R**	350 mm	47,00
9		**AU00921..R**	350 mm	47,00

Sólo se muestra el precio del acabado Blanco /
Only the price of the White finish is shown

Delta

Columna de dos puertas / Two doors column

COLUMNA 2 PUERTAS Column 2 doors	
A857635...	400 mm

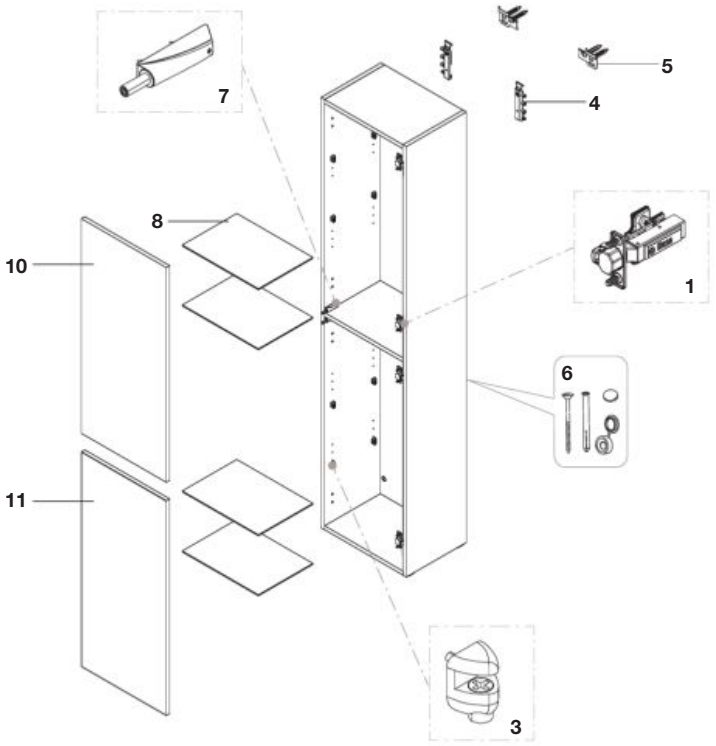

Columna abierta de dos puertas / Open two doors column

COLUMNA ABIERTA 2 PUERTAS Open column 2 doors	
A857636...	400 mm

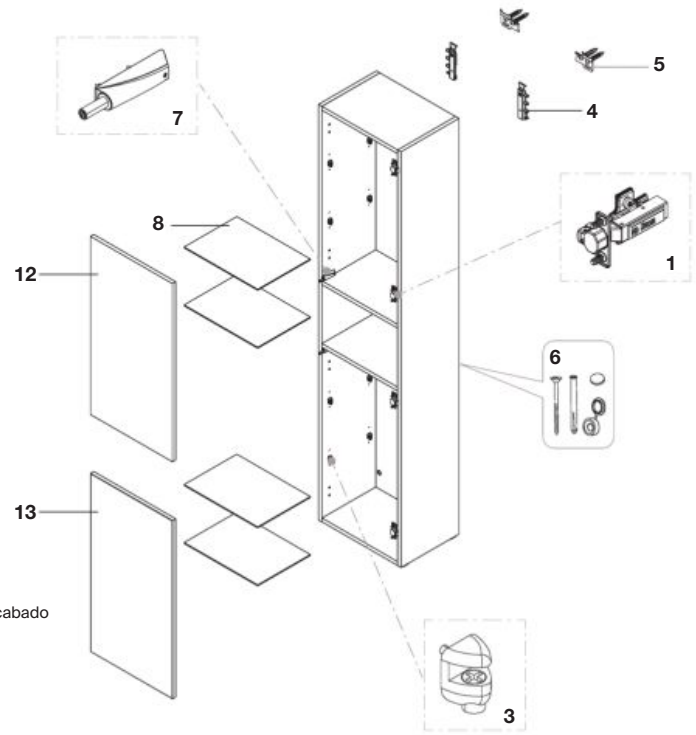

Las últimas posiciones de cada código indican el acabado (color):
The lasts positions indicates the finish (colour):

Producto Product	**Recambio** Spare Part	**Acabado** Finish
509	**MW**	Blanco mate / Matt White
510	**MG**	Gris mate / Matt Grey
511	**DE**	Olmo oscuro / Dark Elm
512	**LO**	Roble claro / Light Oak
513	**GR**	Verde mate / Matt Green

Sólo se muestra el precio del acabado Blanco /
Only the price of the White finish is shown

				€
1	2 un	**AU0089300R**		19,70
3	4 un	**AU0084600R**		1,65
4		**AU0091900R**		15,00
5		**AU0092200R**		10,70
6		**AU0004200R**		10,50
7	2 un	**AU0085000R**		39,30
8		**AU0088600R**	400 mm	24,70
10		**AU00890..R**	873 mm	127,00
11		**AU00963..R**	873 mm	127,00
12		**AU00888..R**	750 mm	96,80
13		**AU00964..R**	750 mm	96,80

Delta

Columna alta de 1 puerta / Top column

COLUMNA ALTA 1 PUERTA Top column 1 door	
A857637...	350 mm

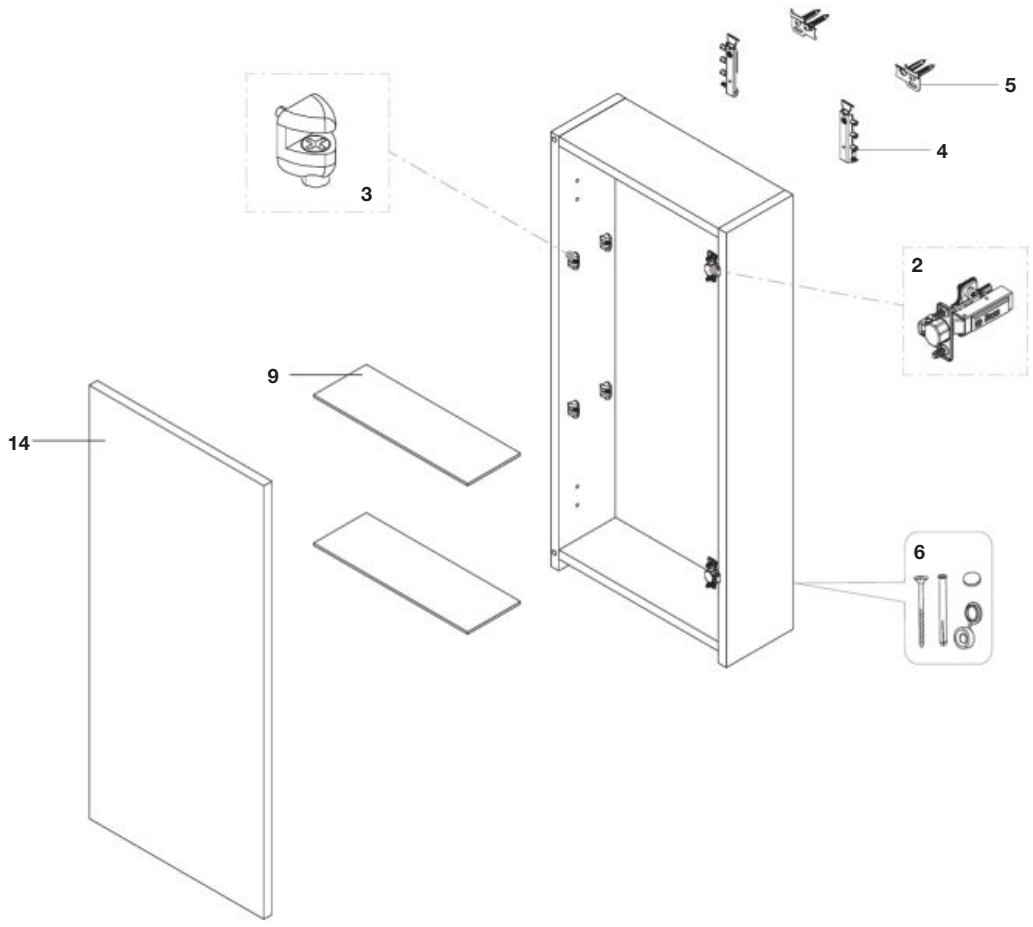

Las últimas posiciones de cada código indican el acabado (color):
The lasts positions indicates the finish (colour):

Producto Product	**Recambio** Spare Part	**Acabado** Finish
509	**MW**	**Blanco mate /** Matt White
510	**MG**	**Gris mate /** Matt Grey
511	**DE**	**Olmo oscuro /** Dark Elm
512	**LO**	**Roble claro /** Light Oak
513	**GR**	**Verde mate /** Matt Green
558	**OW**	**Blanco roto /** Off-White
559	**NG**	**Gris Noble claro /** Light Noble Grey
560	**LT**	**Terracota claro /** Light Terracota
565	**LE**	**Olmo claro /** Light Elm

				€
2	2 un	**AU0089500R**		18,00
3	4 un	**AU0084600R**		1,65
4		**AU0091900R**		15,00
5		**AU0092200R**		10,70
6		**AU0004200R**		10,50
9		**AU0088700R**	350 mm	15,20

				€
14		**AU00892MWR**	748 x 350 mm	86,50
		AU00892MGR		87,00
		AU00892DER		81,20
		AU00892LOR		78,70
		AU00892GRR		97,00
		AU00892OWR		100,00
		AU00892NGR		97,30
		AU00892LTR		106,00
		AU00892LER		64,00

Heima

Mueble base auxiliar de un cajón / Auxiliary one drawer vanity unit

A856915...	300 mm

MUEBLE BASE Vanity Unit		
A851006...		1100 (800+300)
A851005...		
A851004...		900 (600+300)
A851003...		

PACK Set		
A851044...		1100 (800+300)
A851043...		
A851042...		900 (600+300)
A851041...		

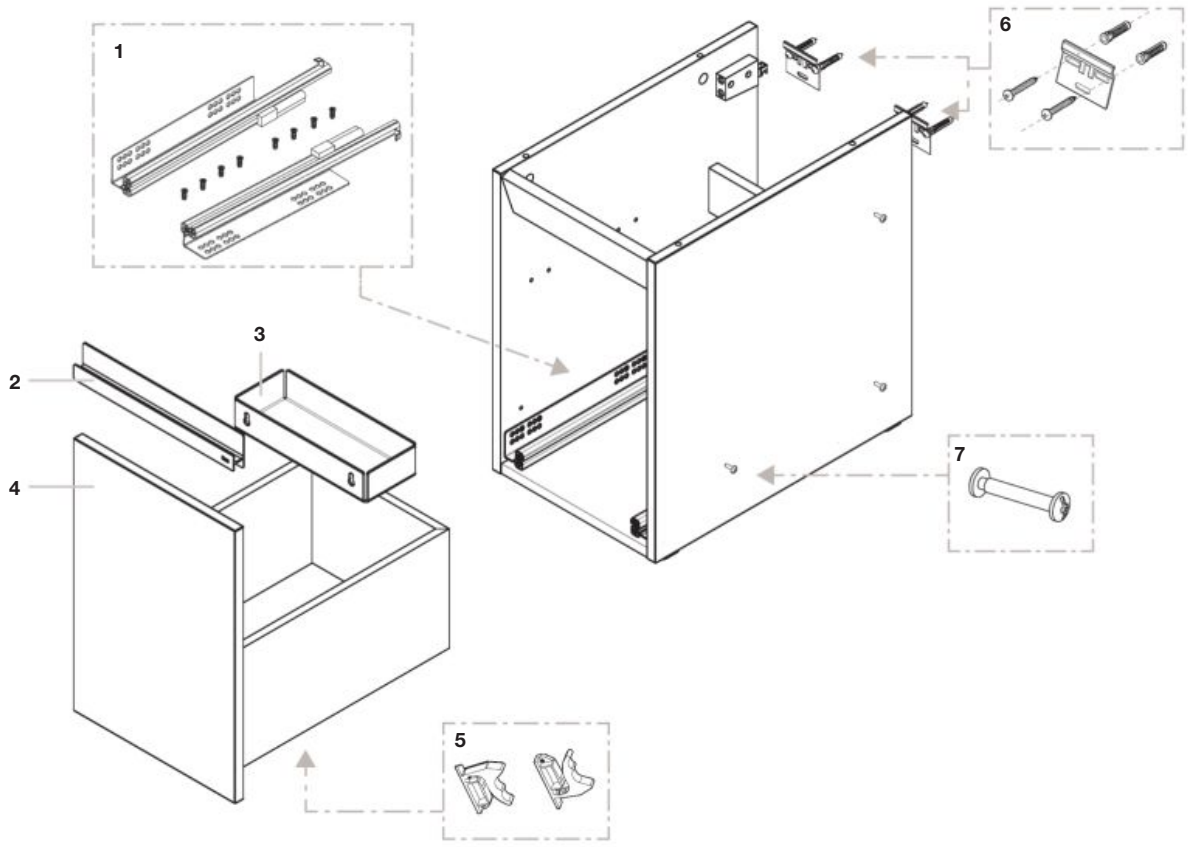

Las últimas posiciones de cada código indican el acabado (color):
The lasts positions indicates the finish (colour):

Producto Product	**Recambio** Spare Part	**Acabado** Finish
353	**TW**	**Blanco madera /** Textured white
806	**WH**	**Blanco brillo /** White Lacquered
321	**AS**	**Fresno /** Ash Melamine
371	**GM**	**Gris mate /** Matt grey

			€
1		**AU0024400R**	63,50
2		**AU0024900R**	60,80
3		**AU0025100R**	38,30
4		**AU00250ASR**	60,20
		AU00250GMR	66,30
		AU00250TWR	61,80
		AU00250WHR	131,00
5		**AU0017300R**	4,68
6	2 un	**AU0013300R**	15,80
7	3 un	**AU0024600R**	1,95

Heima

Mueble base un cajon / One drawer vanity unit

A856914...	300 mm
A856916...	800 mm

MUEBLE BASE Vanity Unit			**PACK** Set		
A851007...		1200 (600+600)	**A851045...**		1200 (600+600)
A851006...		1100 (800+300)	**A851044...**		1100 (800+300)
A851005...			**A851043...**		
A851004...		900 (600+300)	**A851042...**		900 (600+300)
A851003...			**A851041...**		
A851002...		800	**A851040...**		800
A851001...		600	**A851039...**		600

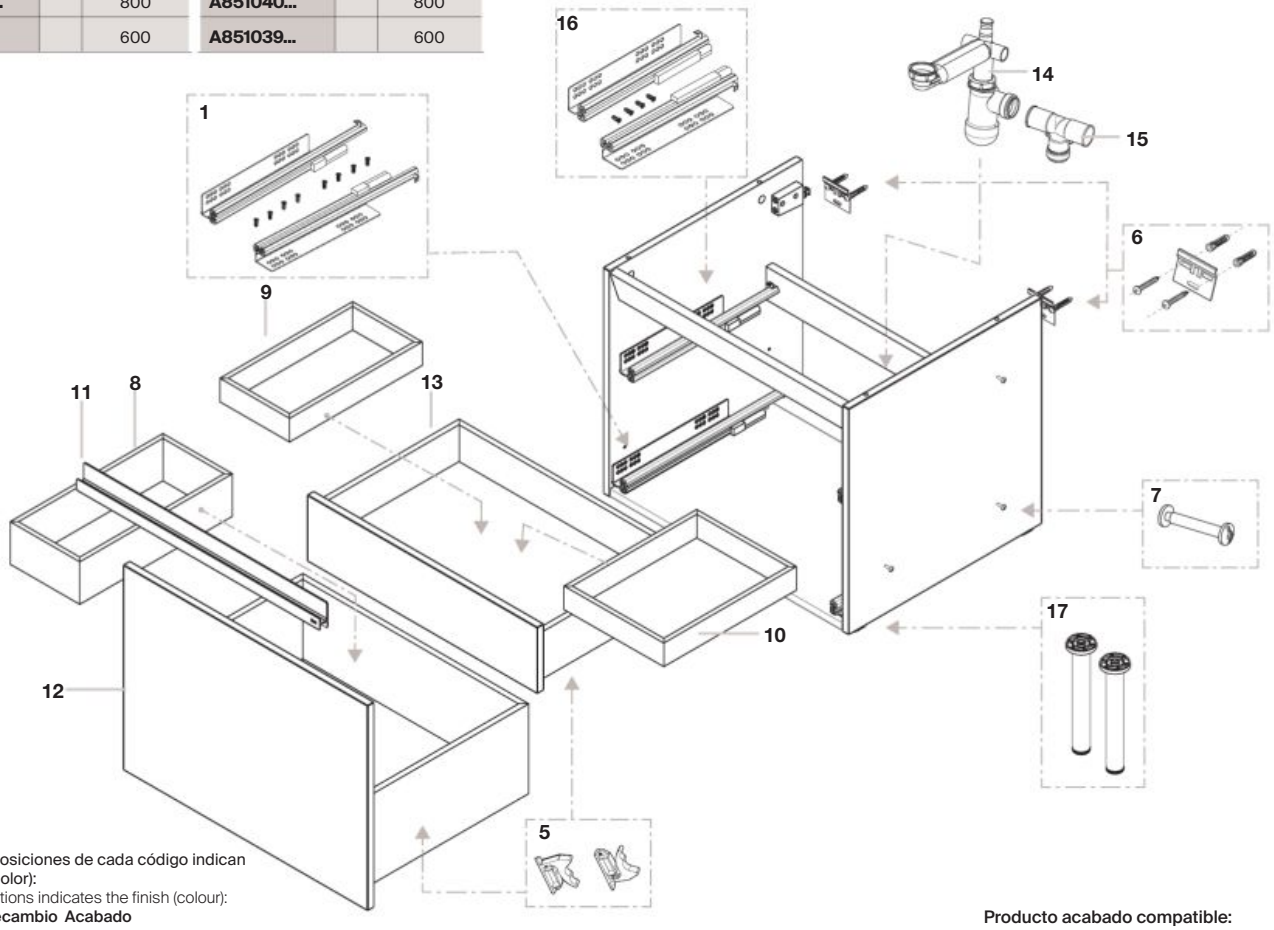

Las últimas posiciones de cada código indican el acabado (color):
The lasts positions indicates the finish (colour):

Producto Product	Recambio Spare Part	Acabado Finish
353	**TW**	**Blanco madera /** Textured white
806	**WH**	**Blanco brillo /** White Lacquered
321	**AS**	**Fresno /** Ash Melamine
371	**GM**	**Gris mate /** Matt grey

Producto acabado compatible:
Compatible finished products:

		€
17	**A856925331**	-

				€
1		**AU0024400R**		63,50
5		**AU0017300R**		4,68
6	2 un	**AU0013300R**		15,80
7	3 un	**AU0024600R**		1,95
8		**AU0024700R**	373 x 170 mm	25,20
9		**AU0024500R**	324 x 170 mm	23,70
10		**AU0018900R**	324 x 270 mm	30,00
11		**AU0024800R**	600 mm	46,70
		AU0025400R	800 mm	51,30

			€
12	**AU00242TWR**	600 mm	62,80
	AU00242ASR		61,70
	AU00242GMR		91,00
	AU00242WHR		114,00
	AU00253TWR	800 mm	N.D.
	AU00253ASR		101,00
	AU00253GMR		99,80
	AU00253WHR		129,00

			€
13	**AU00243TWR**	600 mm	N.D.
	AU00243ASR		56,80
	AU00243GMR		61,20
	AU00243WHR		48,30
	AU00252TWR	800 mm	N.D.
	AU00252ASR		63,00
	AU00252GMR		59,30
	AU00252WHR		81,80
14	**AU0014100R**		44,90
15	**AU0020800R**		7,68
16	**AU0017600R**		54,30

Heima

Encimeras / Countertops

ENCIMERAS Countertops		
A856924...		1200
A856923...		1100
A856922...		
A856921...		900
A856920...		
A856919...		800
A856918...		600

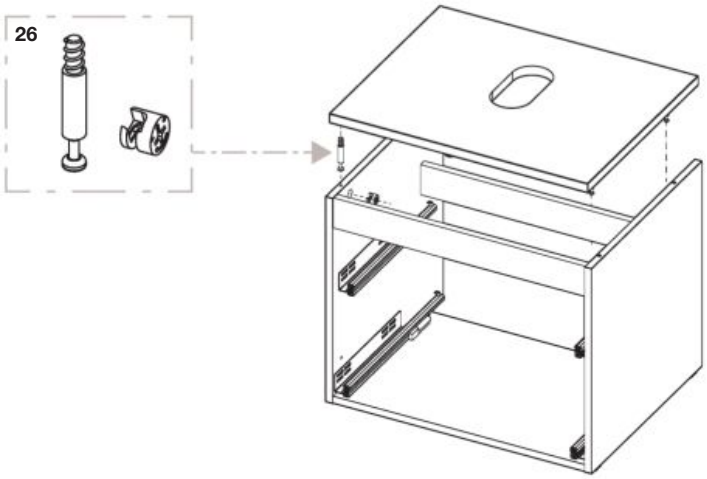

			€
26	4 un	**AU0025500R**	3,32

Columna de dos puertas / Two doors columns

A856913...	1600 mm

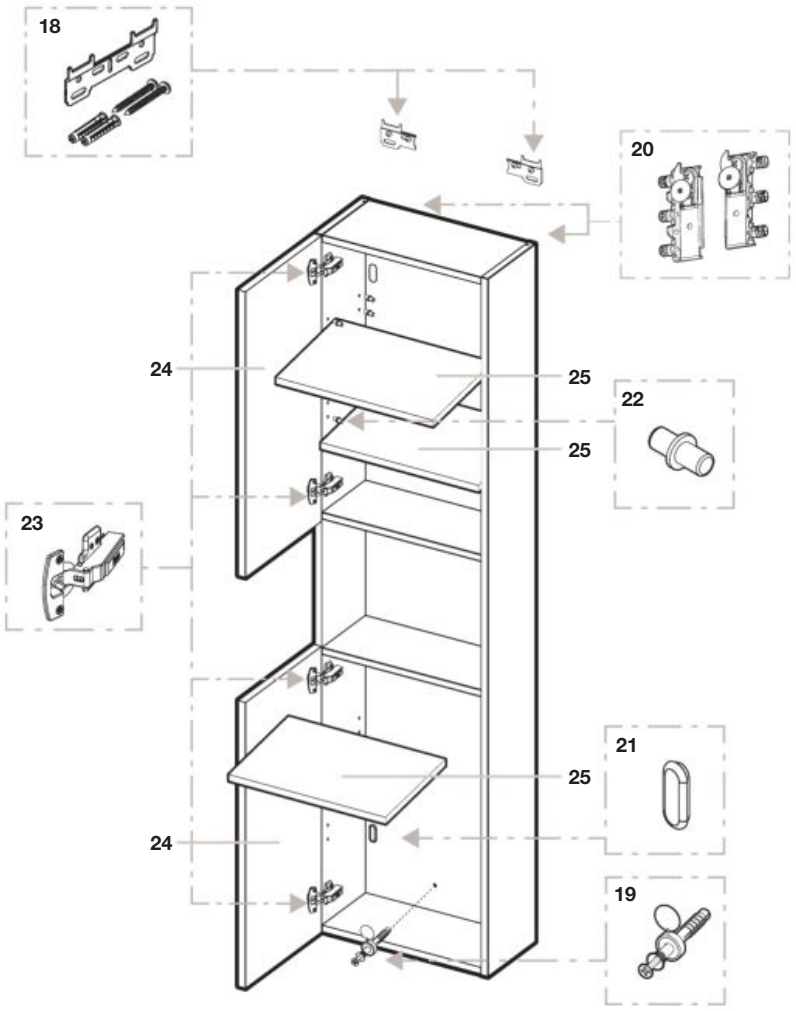

Las últimas posiciones de cada código indican el acabado (color):
The lasts positions indicates the finish (colour):

Producto Product	Recambio Spare Part	Acabado Finish
353	TW	Blanco madera / Textured white
806	WH	Blanco brillo / White Lacquered
321	AS	Fresno / Ash Melamine
371	GM	Gris mate / Matt grey

			€
18		**AU0013800R**	12,10
19			
20		**AU0013700R**	16,30
21	4 un		
21	4 un	**AU0013700R**	16,30
22	4 un	**AU0013900R**	8,63
23	2 un	**AU0019900R**	10,60
24		**AU00256ASR**	34,20
		AU00256GMR	34,50
		AU00256TWR	N.D.
		AU00256WHR	70,30
25		**AU00257ASR**	11,00
		AU00257GMR	11,00
		AU00257TWR	12,10
		AU00257WHR	59,80

Savana

Encimera hidrófuga para lavabo / Worktop

UNIT: ENCIMERA Worktop	
A857318...	600 mm
A857319...	800 mm
A857320...	1000 mm
A857321...	1200 mm
A857322...	1400 mm

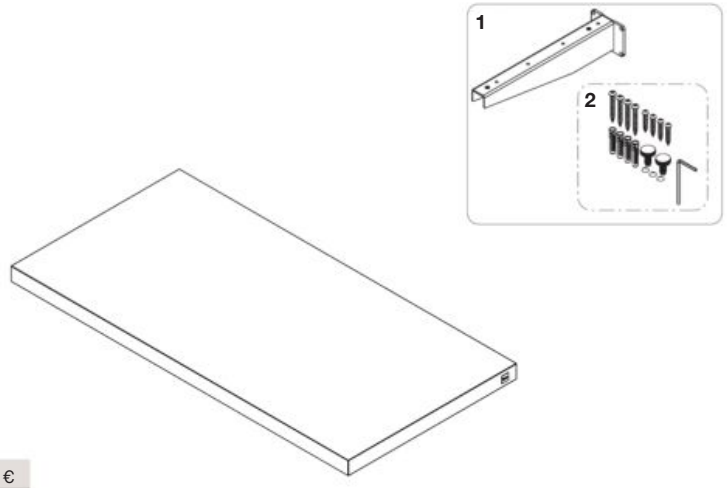

Las últimas posiciones de cada código indican el acabado (color):
The lasts positions indicates the finish (colour):

Producto	Recambio	Acabado
Product	Spare Part	Finish
806	**WH**	Blanco brillante / White Lacquered
402	**GA**	Gris antracita / Grey Anthracite

			€
1	3 un	**AU0062400R**	142,00
2	3 un	**AU0062500R**	16,80

Suma

* No disponible / Not available

Mueble auxiliar / Auxiliar unit

UNIT: MUEBLE AUXILIAR SUMA Auxliliar unit one drawer	
A857076...	600 mm
A857077...	800 mm

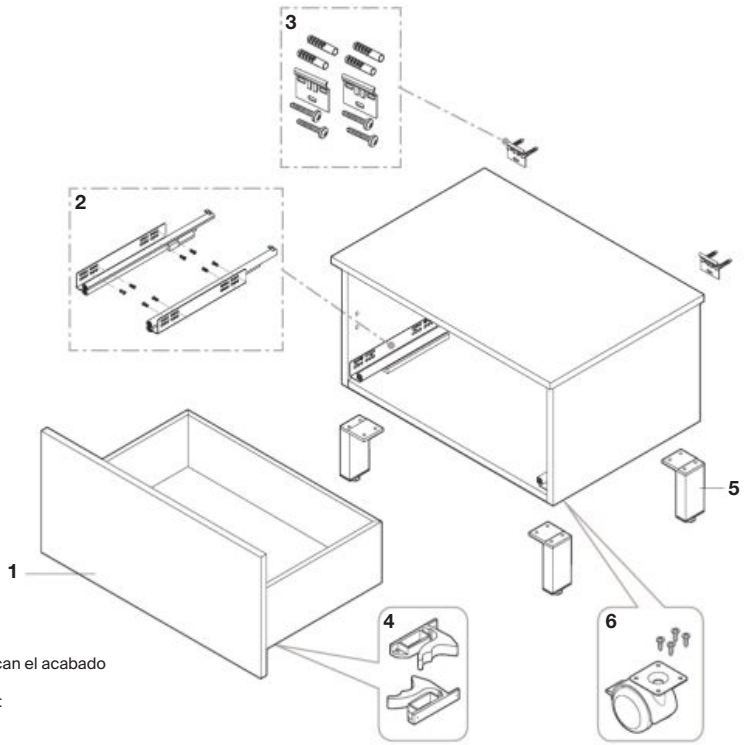

Las últimas posiciones de cada código indican el acabado (color):
The lasts positions indicates the finish (colour):

Producto	Recambio	Acabado
Product	Spare Part	Finish
806	**WH**	Blanco brillante / White Lacquered
402	**GA**	Gris antracita / Grey Anthracite

				€
1	**AU00348GAR**	600 mm		45,70
	AU00348WHR			42,70
	AU00349GAR	800 mm		55,70
	AU00349WHR			52,50

			€
2	**AU0038500R**		20,50
3	**AU0013300R**		15,80
4	**AU0017300R**		4,68
5	2 un	**AU0035000R**	14,10

Producto acabado compatible:
Compatible finished products:

			€
6	4 un	**A816821000**	-

Otras series de muebles / Other furniture series

Long Island

		€
AU0000700R	**Kit Bisagras Long Island (4u) /** Kit hinges Long Island (4u)	88,70
AU0000800R	**Kit Amortiguadores Long Island (2u) /** Kit amortidors Long Island (2u)	33,30

Cala

		€
AU0000300R	**Kit Conjunto Cierrer Exp Compl Cala /** Kit hinges Long Island (4u)	56,20
AU0000400R	**Kit Guías Cala (2u) /** Kit drawer runners Cala (2u)	103,00
AU0000500R	**Kit Bolsa Herrajes Cala /** Kit bag herr. Cala	33,50

Espejos LED / LED Mirrors

Iridia



A812347000	1400 x 700 mm
A812346000	1200 x 700 mm
A812342000	1000 x 700 mm
A812341000	800 x 700 mm
A812340000	600 x 700 mm
A812339000	400 x 700 mm



A812338000	Ø 1000 mm
A812337000	Ø 800 mm

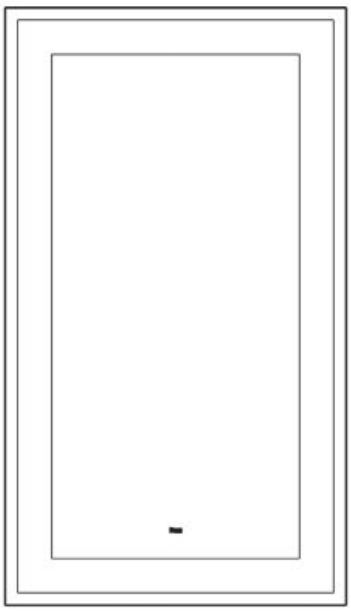

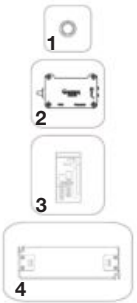

			€
1	**AU0052300R**		23,80
2	**AU0052400R**		2,58
3	**AU0052500R**		1,82
4	**AU0052600R**	20 W	31,30
	AU0052700R	30 W	59,00
	AU0053500R	50 W	113,00

Eidos

A812354000	500 mm
A812355000	600 mm
A812359000	700 mm
A812356000	800 mm
A812360000	900 mm
A812357000	1000 mm
A812361000	1100 mm
A812358000	1200 mm

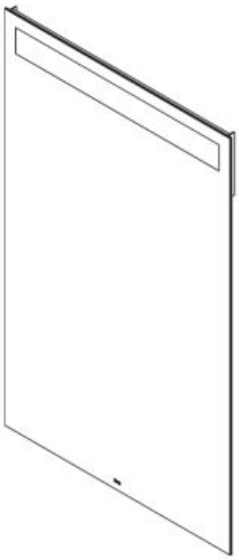



		€
1	**AU0052400R**	2,58
2	**AU0052500R**	1,82

Prisma

Prisma Basic / Prisma Basic

A812257000	600 mm
A812258000	800 mm
A812259000	900 mm
A812260000	1000 mm
A812261000	1100 mm
A812262000	1200 mm

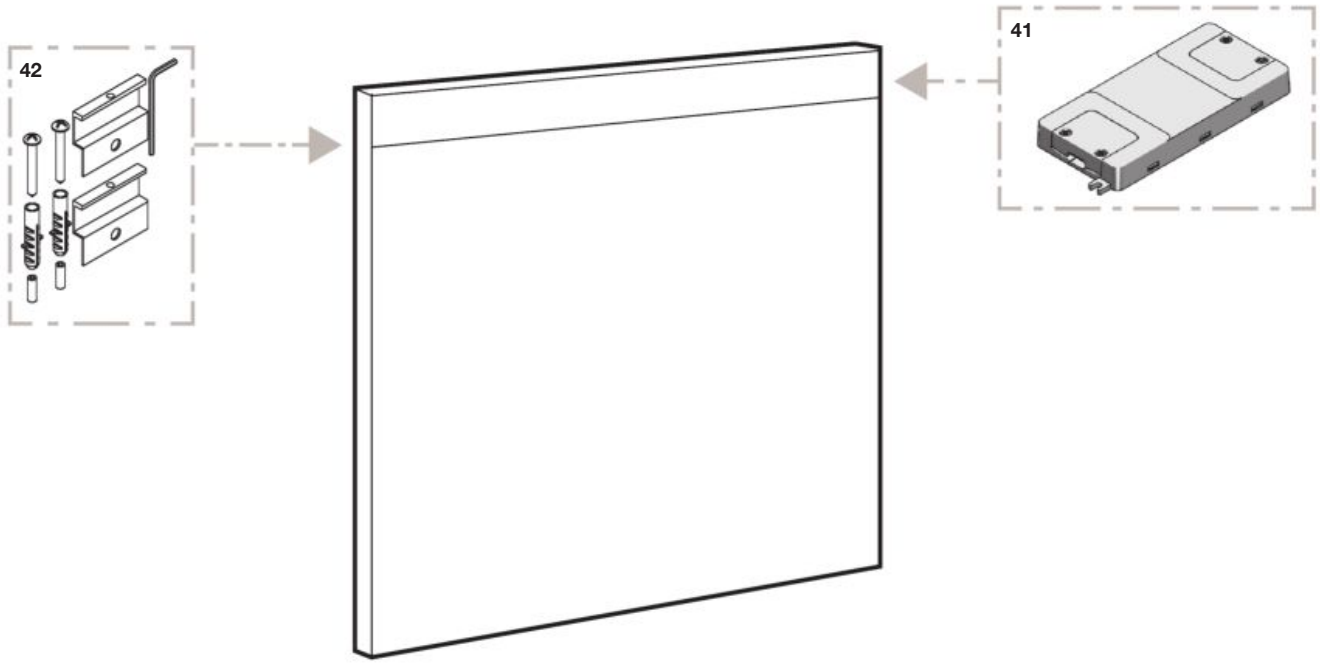

		€
41	**AU0023600R**	25,80
42	**AU0023700R**	3,50

Luna Ambient

Espejo cuadrado / Mirror square

ESPEJO LUNA AMBIENT CUADRADO Luna Ambient Mirror Square	
A812396000	600 mm
A812397000	800 mm
A812398000	1000 mm
A812399000	1200 mm

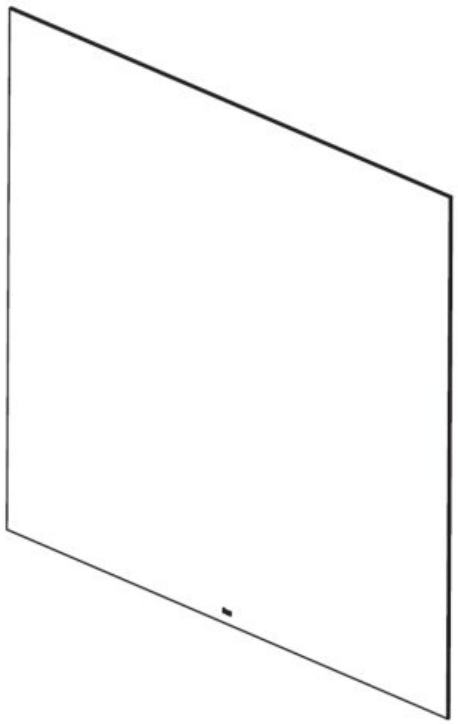

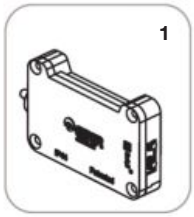

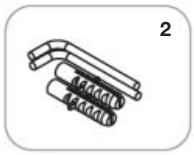

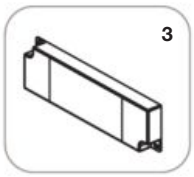

Espejo redondo / Mirror round

ESPEJO LUNA AMBIENT REDONDO Luna Ambient Mirror Round	
A812400000	600 mm
A812401000	800 mm
A812402000	1000 mm

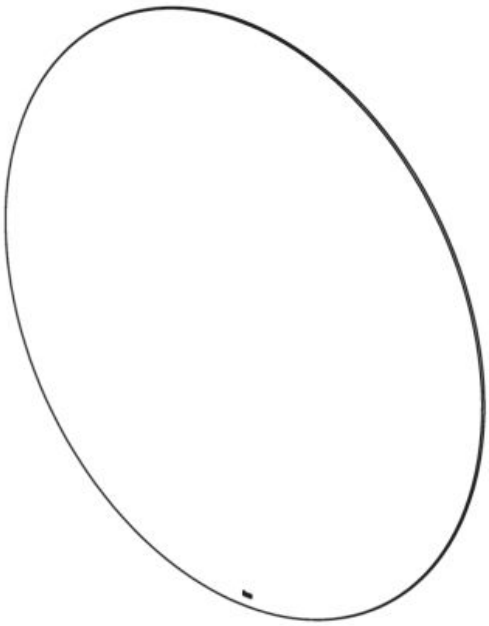

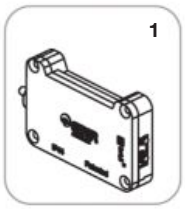

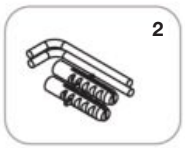

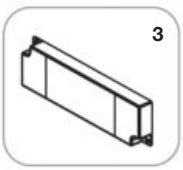

		€
1	**AU0052400R**	2,58
2	**AU0052500R**	1,82
3	**AU0100000R**	26,80

Luna & Eidos

Cabinet Luna 500mm 1 puerta / Luna Cabinet 500mm 1 Door

CABINET LUNA 500mm 1 PUERTA Luna Cabinet 500mm 1 Door	
A857374472	500 mm

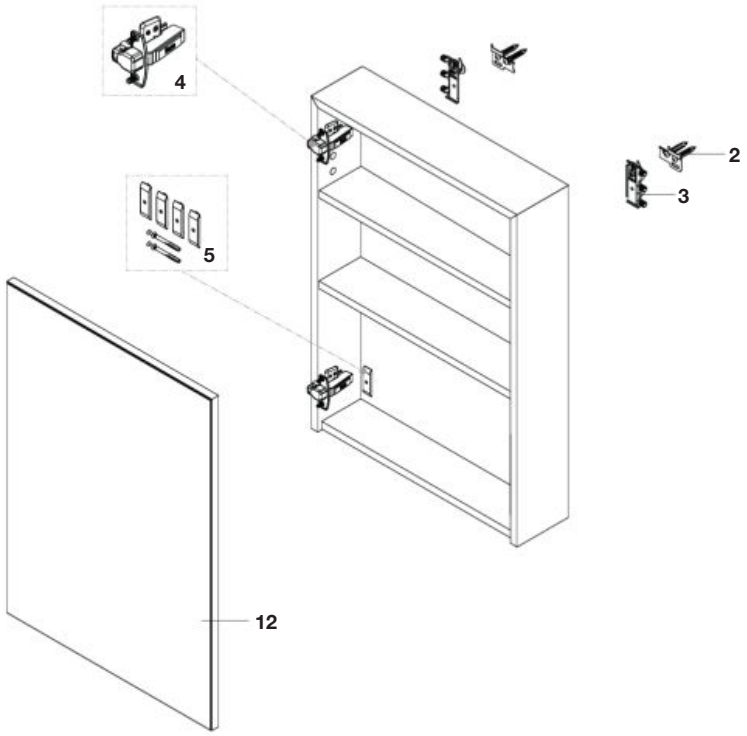

				€
2		**AU0013800R**		12,10
3		**AU0013700R**		16,30
4	2 un	**AU0064700R**		15,10
5	4 un	**AU0066400R**		6,77
12		**AU0084100R**	500mm	84,20

Cabinet Luna 600mm 2 puertas / Luna Cabinet 600mm 2 Doors

CABINET LUNA 600mm 2 PUERTAS Luna Cabinet 600mm 2 Doors	
A857375472	600 mm

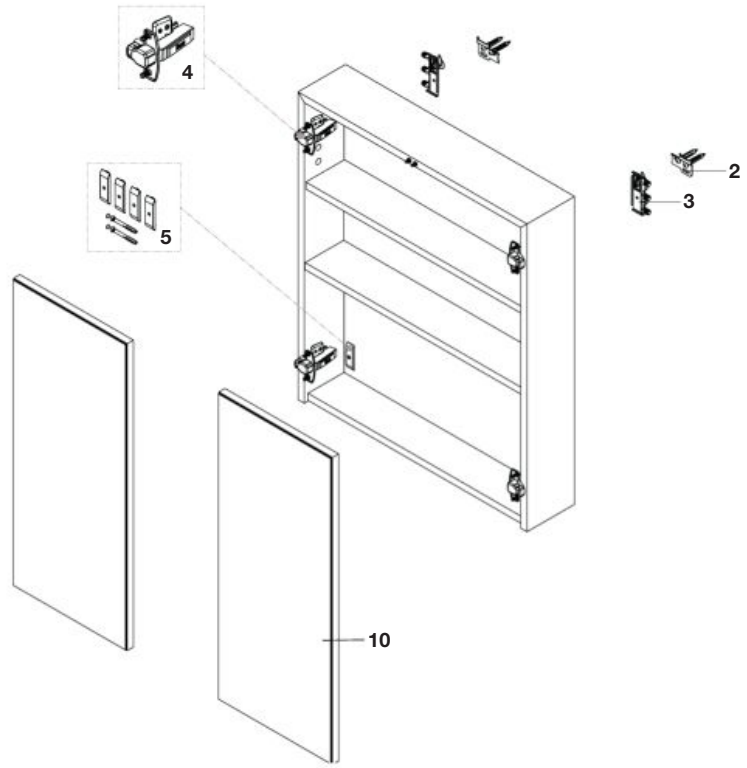

				€
2		**AU0013800R**		12,10
3		**AU0013700R**		16,30
4	2 un	**AU0064700R**		15,10
5	4 un	**AU0066400R**		6,77
10		**AU0083800R**	300mm	70,50

Luna & Eidos

Cabinet Luna 800mm 2 puertas / Luna Cabinet 800mm 2 Doors

CABINET LUNA 800mm 2 PUERTAS Luna Cabinet 800mm 2 Doors	
A857376472	800 mm

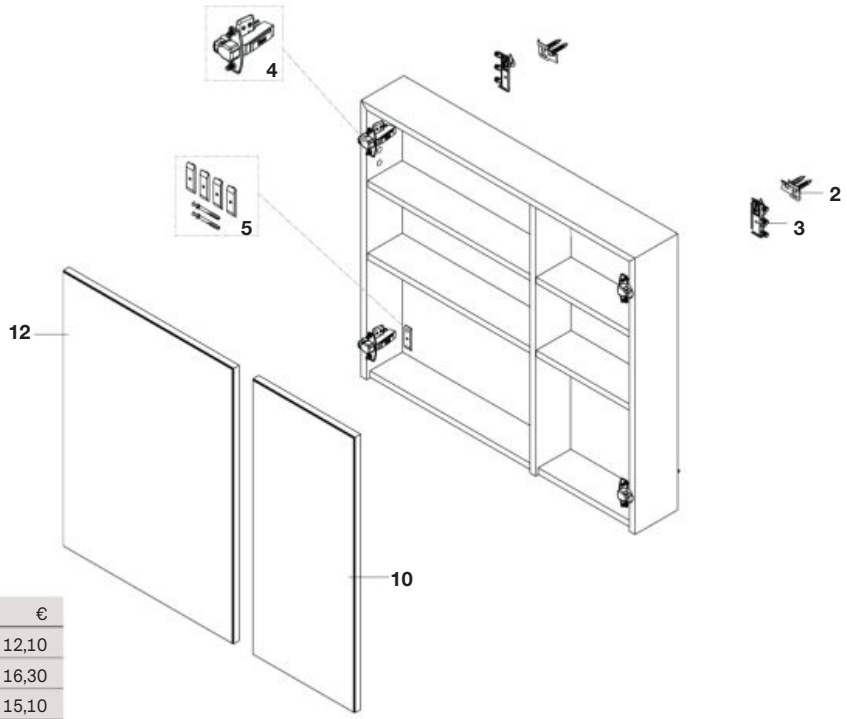

				€
2		**AU0013800R**		12,10
3		**AU0013700R**		16,30
4	2 un	**AU0064700R**		15,10
5	4 un	**AU0066400R**		6,77
10		**AU0083800R**	300mm	70,50
12		**AU0084100R**	500mm	84,20

Cabinet Luna 1000mm 3 puertas / Luna Cabinet 1000mm 3 Doors

CABINET LUNA 1000mm 3 PUERTAS Luna Cabinet 1000mm 3 Doors	
A857377472	1000 mm

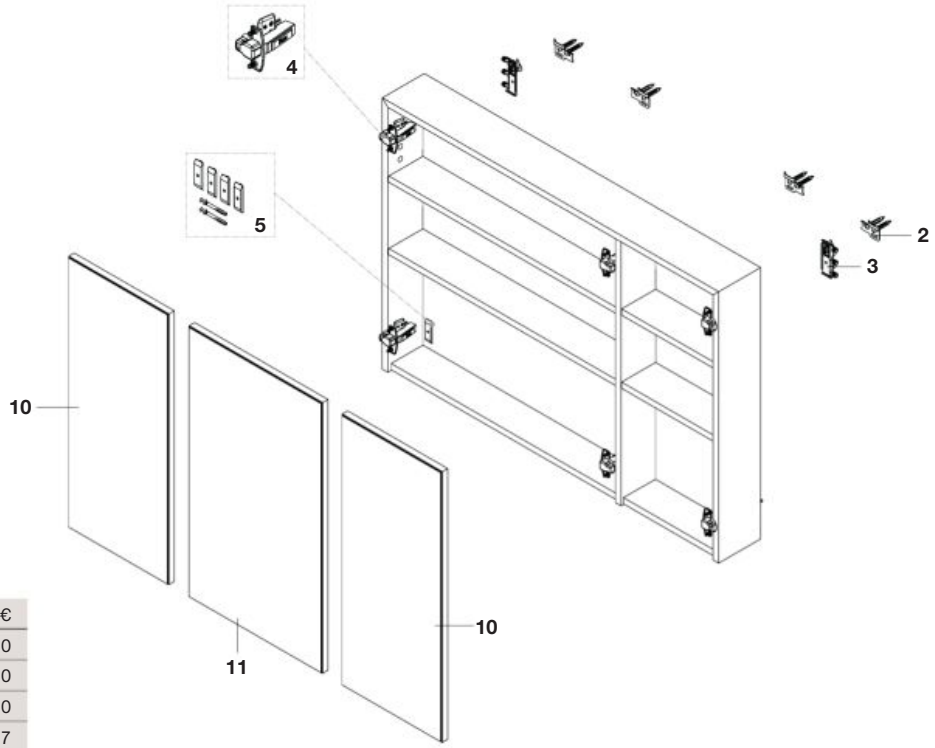

				€
2		**AU0013800R**		12,10
3		**AU0013700R**		16,30
4	2 un	**AU0064700R**		15,10
5	4 un	**AU0066400R**		6,77
10		**AU0083800R**	300mm	70,50
11		**AU0084000R**	400mm	77,20

Luna & Eidos

Cabinet Eidos 600mm 2 puertas / Eidos Cabinet 600mm 2 Doors

CABINET EIDOS 600mm 2 PUERTAS Eidos Cabinet 600mm 2 Doors	
A857378472	600 mm

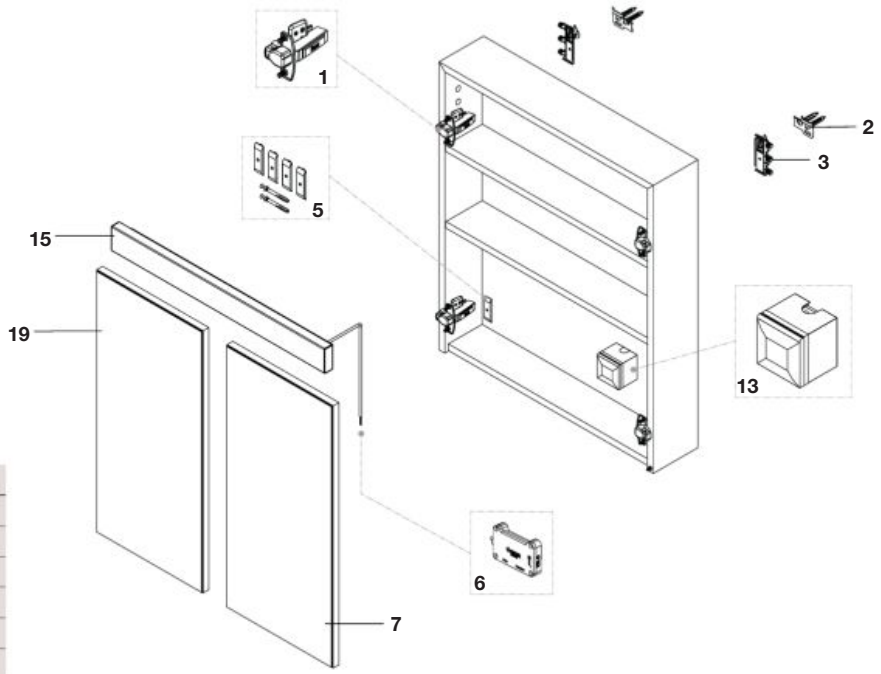

				€
1	2 un	**AU0019900R**		10,60
2		**AU0013800R**		12,10
3		**AU0013700R**		16,30
5	4 un	**AU0066400R**		6,77
6		**AU0052400R**		2,58
7		**AU0083000R**	300mm RH	85,80
13		**AU0083500R**		48,30
15		**AU0083700R**	600mm	65,80
19		**AU0107900R**	300mm LH	146,00

Cabinet Eidos 800mm 2 puertas / Eidos Cabinet 800mm 2 Doors

CABINET EIDOS 800mm 2 PUERTAS Eidos Cabinet 800mm 2 Doors	
A857379472	800 mm

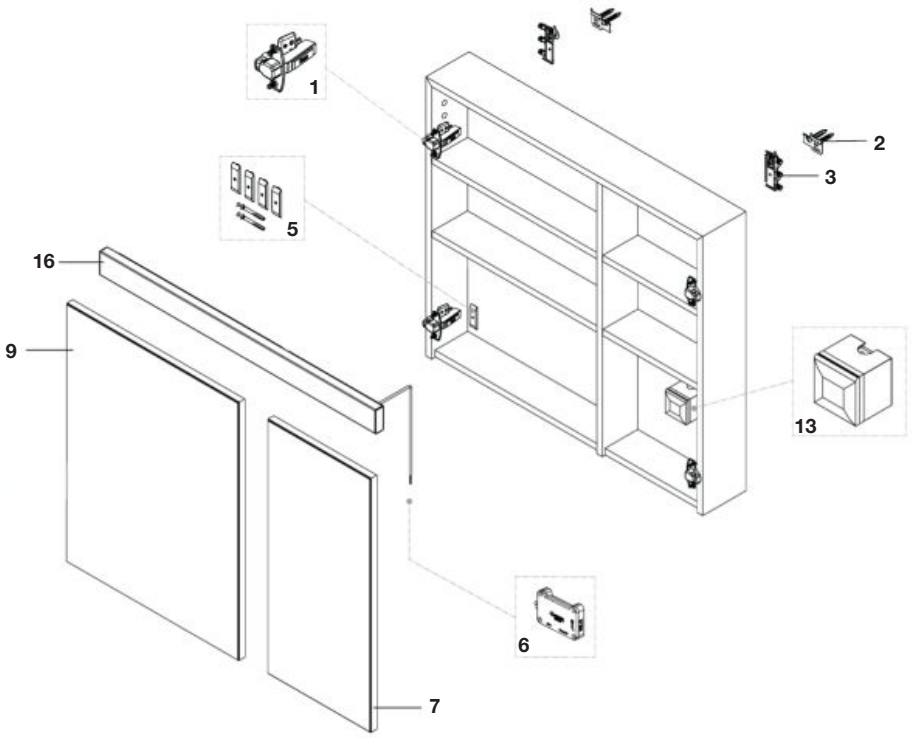

				€
1	2 un	**AU0019900R**		10,60
2		**AU0013800R**		12,10
3		**AU0013700R**		16,30
5	4 un	**AU0066400R**		6,77
6		**AU0052400R**		2,58
7		**AU0083000R**	300mm	85,80
9		**AU0083300R**	500mm	105,00
13		**AU0083500R**		48,30
16		**AU0084200R**	800mm	65,80

Luna & Eidos

Cabinet Eidos 1000mm 3 puertas / Eidos Cabinet 1000mm 3 Doors

CABINET EIDOS 1000mm 3 PUERTAS Eidos Cabinet 1000mm 3 Doors	
A857380472	1000 mm

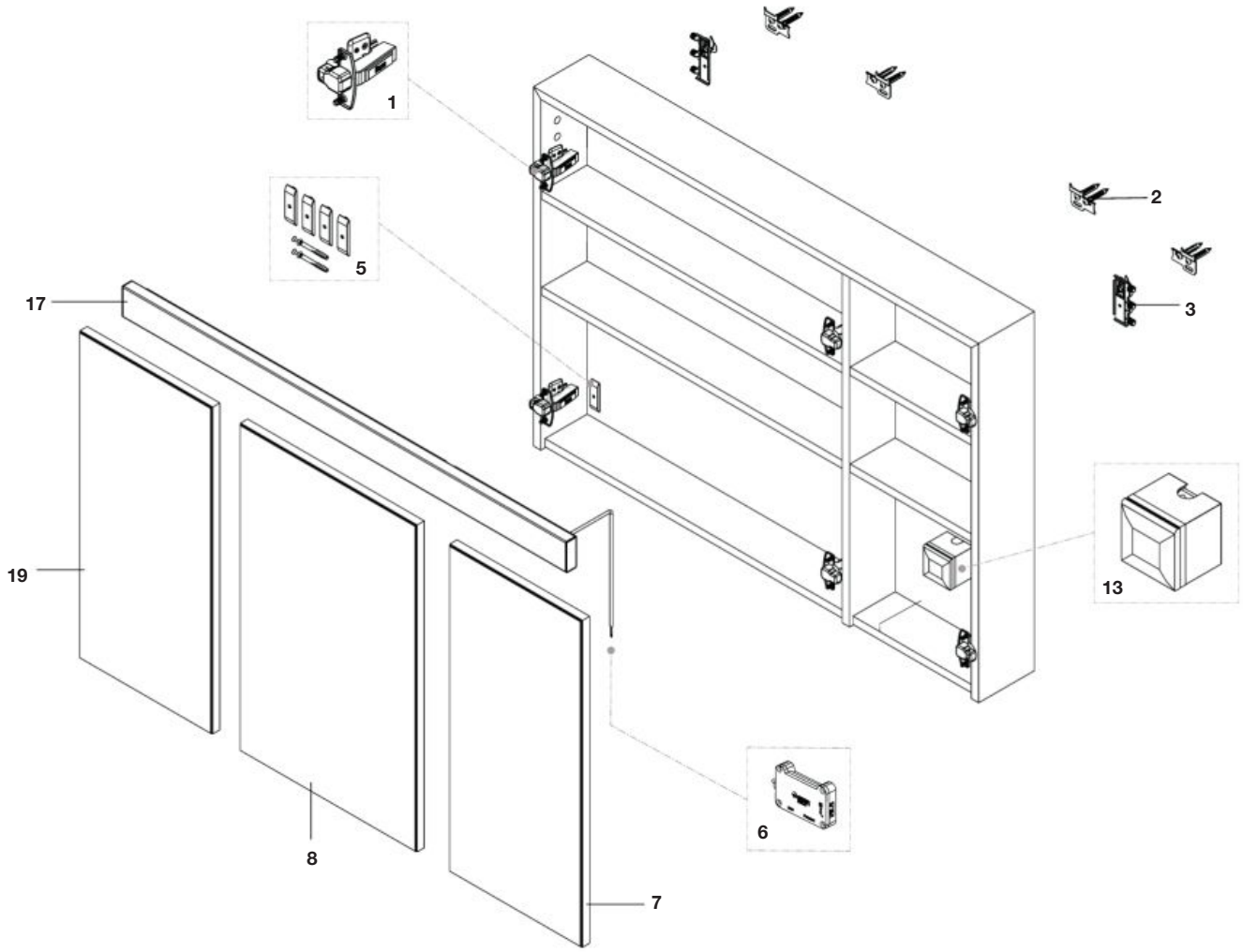

				€
1	2 un	**AU0019900R**		10,60
2		**AU0013800R**		12,10
3		**AU0013700R**		16,30
5	4 un	**AU0066400R**		6,77
6		**AU0052400R**		2,58
7		**AU0083000R**	300mm RH	85,80
8		**AU0083200R**	400mm	96,00
13		**AU0083500R**		48,30
17		**AU0084300R**	1000mm	108,00
19		**AU0107900R**	300mm LH	146,00

Luna

Espejo Luna Ambient / Luna Ambient Mirror

ESPEJO LUNA AMBIENT Luna Ambient Mirror	
A812396000	600 x 800 mm
A812397000	800 x 800 mm
A812398000	1000 x 800 mm
A812399000	1200 x 800 mm

ESPEJO LUNA AMBIENT ROUND Luna Ambient Mirror Round	
A812400000	600 mm
A812401000	800 mm
A812402000	1000 mm

ESPEJO LUNA AMBIENT OVAL Luna Ambient Mirror Oval	
A812400000	450 x 900 mm

Existen dos versiones de este espejo. Consultar pegatina plateada e identificar: la **potencia** LED (W) y/o las **dimensiónes** del espejo (mm).

There are two versions of this mirror. See the silver sticker and identify: the LED power (W) and/or the mirror height dimension (mm).

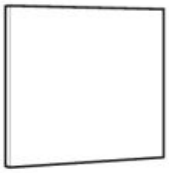







1



2A



2B



3A
3B

			€
1	2 un	**AU0052400R**	2,58
2*	A	**AU0052500R**	1,82
	B	**AU0113200R**	9,37
3*	A	**AU0100000R**	26,80
	B	**AU0113300R**	28,20

IDENTIFICACIÓN VERSIONES Version Identification			
A812396000	600 x 700 mm	10W	**A**
	600 x 800 mm	16W	**B**
A812397000	800 x 700 mm	16W	**A**
	800 x 800 mm	19W	**B**
A812398000	1000 x 700 mm	18W	**A**
	1000 x 800 mm	21W	**B**
A812399000	1200 x 700 mm	20W	**A**
	1200 x 800 mm	24W	**B**
A812400000	600 mm	10W	**A**
		12W	**B**
A812401000	800 mm	13W	**A**
		16W	**B**
A812402000	1000 mm	16W	**A**
		19W	**B**
A812429000	450 x 900 mm	14W	**B**

Espejo Luna Frame / Luna Frame Mirror

ESPEJO LUNA FRAME Luna Frame Mirror	
A812413000	600 x 800 mm
A812414000	800 x 800 mm
A812415000	1000 x 800 mm
A812416000	1200 x 800 mm

ESPEJO LUNA FRAME ROUND Luna Frame Mirror Round	
A812417000	600 mm
A812418000	800 mm
A812419000	1000 mm

ESPEJO LUNA FRAME OVAL Luna Frame Mirror Oval	
A812420000	450 x 900 mm

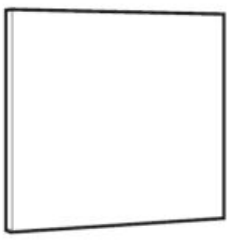

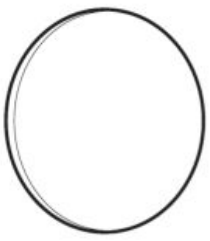



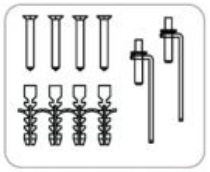

2

			€
2		**AU0113200R**	9,37

Luna

Espejo Luna Frame Ambient / Luna Frame Ambient Mirror

ESPEJO LUNA FRAME AMBIENT Luna Frame Ambient Mirror	
A812413000	600 x 800 mm
A812414000	800 x 800 mm
A812415000	1000 x 800 mm
A812416000	1200 x 800 mm

ESPEJO LUNA FRAME AMBIENT ROUND Luna Frame Ambient Mirror Round	
A812417000	600 mm
A812418000	800 mm
A812419000	1000 mm

ESPEJO LUNA FRAME AMBIENT OVAL Luna Frame Ambient Mirror Oval	
A812420000	450 x 900 mm

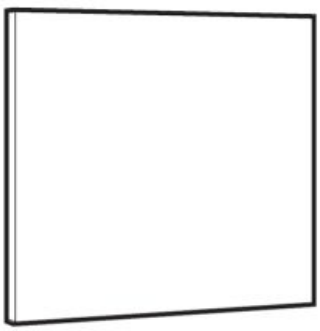

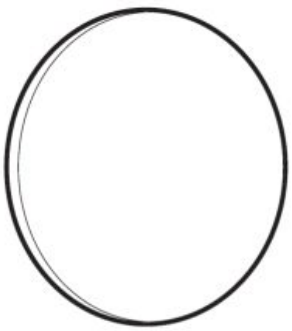





1

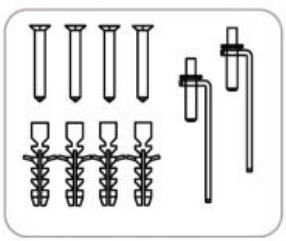

2

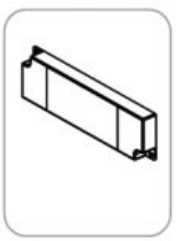

3

		€
1	**AU0052400R**	2,58
2	**AU0113200R**	9,37
3	**AU0113300R**	28,20

Luna

Armario espejo / Cabinet mirror

A856839...	400 mm
A856840...	500 mm

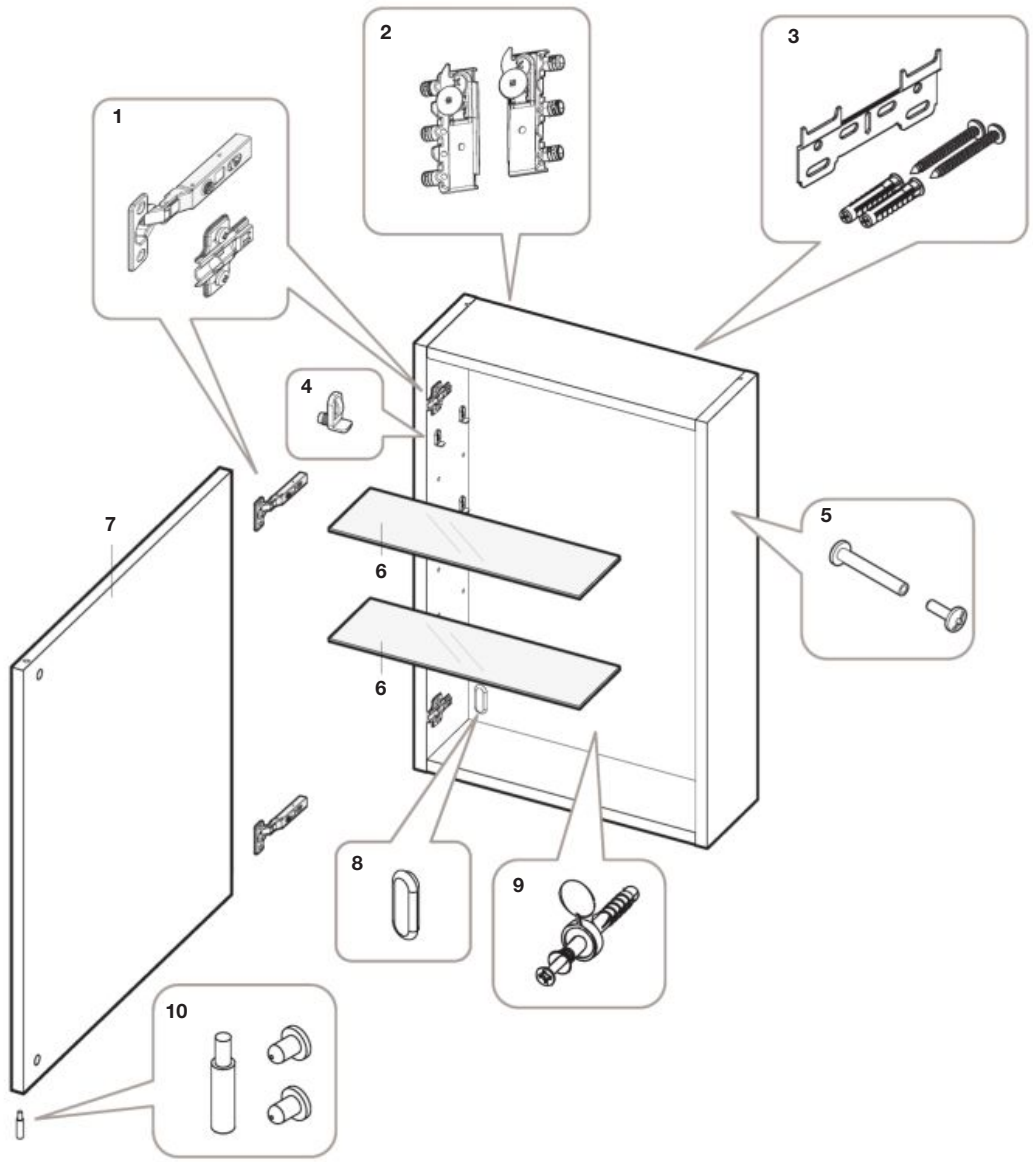

Las últimas posiciones de cada código indican el acabado (color):
The lasts positions indicates the finish (colour):

Producto	Recambio	Acabado
806	**WH**	Blanco brillo / White
155	**NB**	Roble texturizado / Textured Oak
153	**GA**	Gris antracita / Anthracite grey
154	**WE**	Wengue / Wenge

				€
1	2 ud	**AU0089500R**		18,00
4	4 ud	**AU0013500R**		5,63
5	4 ud	**AU0016500R**		5,47
6		**AU0016400R**	400 mm	12,40
		AU0016700R	500 mm	15,10

			€
7	**AU00162WHR**	400 mm	79,50
	AU00162NBR	400 mm	-
	AU00162GAR	400 mm	81,80
	AU00162WER	400 mm	N.D.
	AU00166WHR	500 mm	92,00
	AU00166OTR	500 mm	92,00
	AU00166GAR	500 mm	92,00
	AU00166WER	500 mm	N.D.

			€
8	4 ud	**AU0013700R**	16,30
2			
3		**AU0013800R**	12,10
9			
10		**AU00163C0R**	8,92

Luna

Armario con espejo de aumento / Cabinet mirror with magnifying mirror

ARMARIO-ESPEJO CON ESPEJO DE AUMENTO, IZQUIERDO Cabinet mirror with magnifying mirror, left	
A856841...	200 mm

ARMARIO-ESPEJO CON ESPEJO DE AUMENTO, DERECHO Cabinet mirror with magnifying mirror, right	
A856843...	200 mm

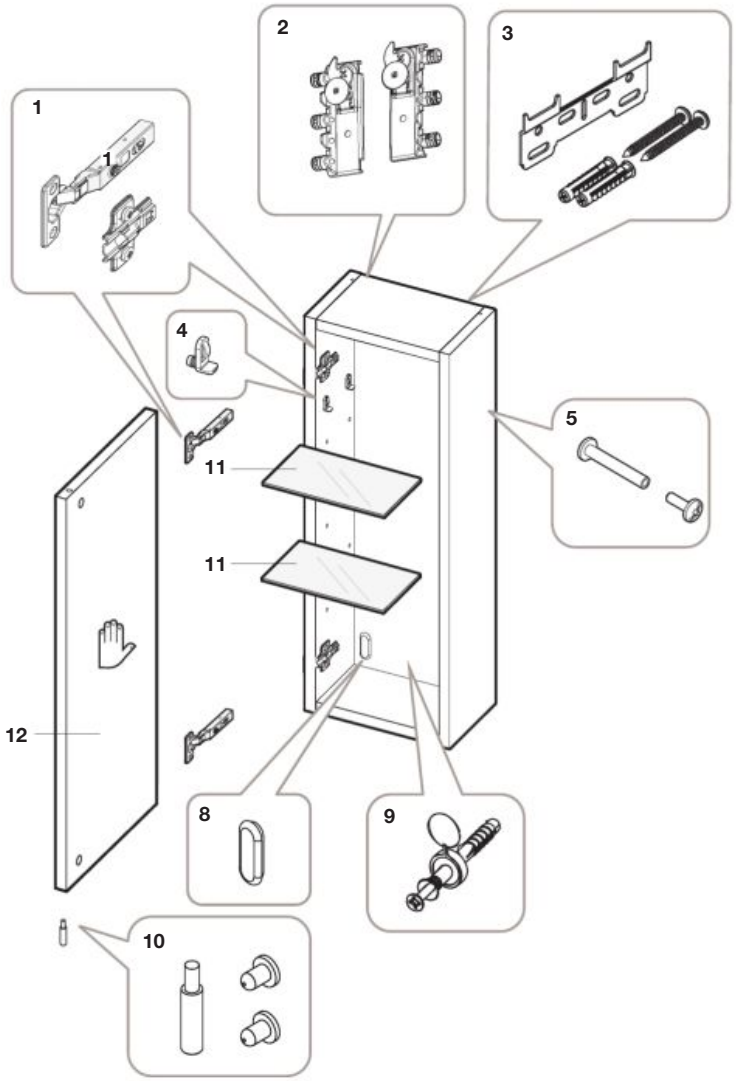

Las últimas posiciones de cada código indican el acabado (color):
The lasts positions indicates the finish (colour):

Producto	**Recambio**	Acabado
806	**WH**	Blanco brillo / White
155	**NB**	Roble texturizado / Textured Oak
153	**GA**	Gris antracita / Anthracite grey
154	**WE**	Wengue / Wenge

				€
1	2 ud	**AU0089500R**		18,00
4	4 ud	**AU0013500R**		5,63
5	4 ud	**AU0016500R**		5,47
6		**AU0016400R**	400 mm	12,40
		AU0016700R	500 mm	15,10
7		**AU00162WHR**	400 mm	79,50
		AU00162NBR	400 mm	-
		AU00162GAR	400 mm	81,80
		AU00162WER	400 mm	N.D.
		AU00166WHR	500 mm	92,00
		AU00166OTR	500 mm	92,00
		AU00166GAR	500 mm	92,00
		AU00166WER	500 mm	N.D.

				€
2		**AU0013700R**		16,30
8	4 ud			
8	4 ud	**AU0013700R**		16,30
3		**AU0013800R**		12,10
9				
10		**AU00163C0R**		8,92
11		**AU0016800R**	200 mm	10,10

				€
12		**AU00169WHR**		105,00
		AU00169OTR		105,00
		AU00169GAR		105,00
		AU00169WER		N.D.
		AU00170WHR		105,00
		AU00170OTR		105,00
		AU00170GAR		105,00
		AU00170WER		N.D.

Luna

Camerino / Cabinet

A856842...	200 mm

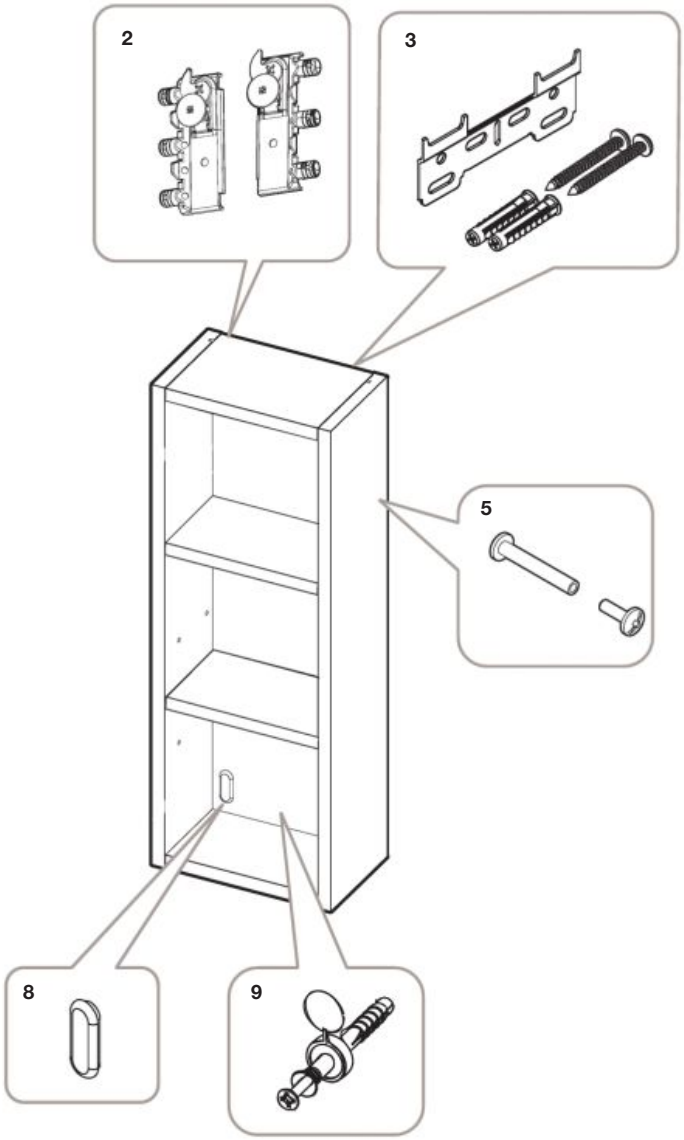

Las últimas posiciones de cada código indican el acabado (color):
The lasts positions indicates the finish (colour):

Producto	**Recambio**	Acabado
806	**WH**	**Blanco brillo /** White
155	**NB**	**Roble texturizado /** Textured Oak
153	**GA**	**Gris antracita /** Anthracite grey
154	**WE**	**Wengue /** Wenge

			€
5	4 ud	**AU0016500R**	5,47
8	4 ud	**AU0013700R**	16,30
2			
8	4 ud	**AU0013700R**	16,30
3		**AU0013800R**	12,10
9			

Eidos-N

Espejo con luz superior / Mirror with top light

A812460000	400 x 800 mm
A812461000	450 x 800 mm
A812462000	500 x 800 mm
A812463000	550 x 800 mm
A812464000	600 x 800 mm
A812465000	650 x 800 mm
A812466000	700 x 800 mm
A812467000	800 x 800 mm
A812468000	900 x 800 mm
A812469000	1000 x 800 mm
A812470000	1100 x 800 mm
A812471000	1200 x 800 mm
A812472000	800 x 1200 mm

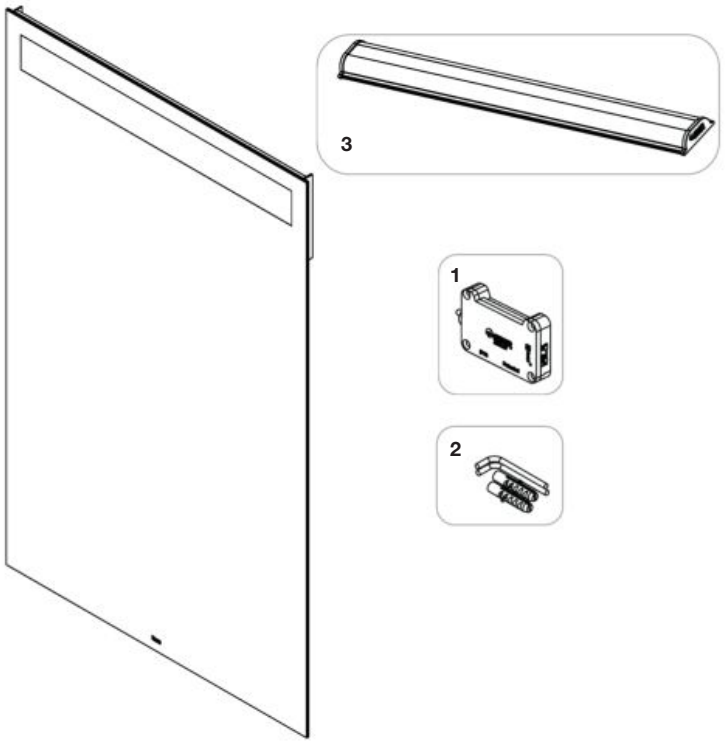

			€
1	**AU0052400R**		2,58
2	**AU0052500R**		1,82
3	**AU0146200R**	400, 550 mm	20,50
	AU0146300R	500, 550 mm	24,00
	AU0146400R	600 mm - 700 mm	26,30
	AU0146500R	800, 900 mm	31,50
	AU0146600R	1000, 1100 mm	40,50
	AU0146700R	1200 mm	44,50

Starlight

Iluminación / Lighting

APLIQUE / Light	
A813082000	250 mm

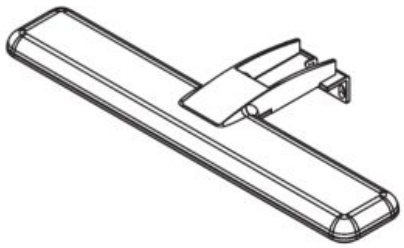



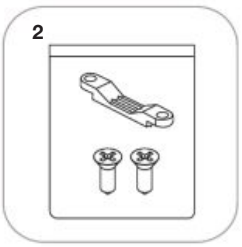

Moonlight

Iluminación / Lighting

APLIQUE / Light	
A813083000	300 mm
A813087000	300 mm con soporte / 300 mm with hanger

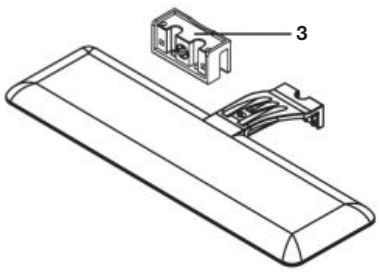



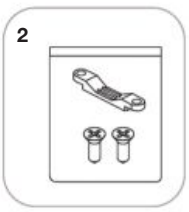

		€
1	**AU0052400R**	2,58
2	**AU0061900R**	1,00
3	**AU0062100R**	2,47

Delight

Iluminación / Lighting

APLIQUE / Light	
A813052001	150 mm
A813053001	280 mm
A813054001	500 mm
A813055001	800 mm

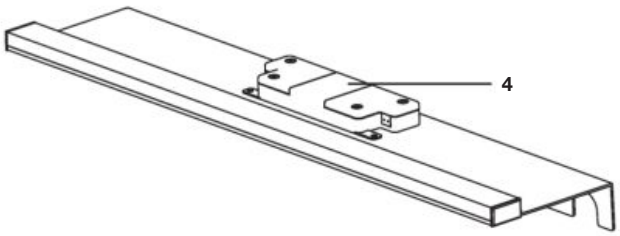





A813054001 500mm		
A antes de numero de serie: **19080038** / before serial number: **19080038**		B después de numero de serie: **19080038** / after serial number: **19080038**
4	**AU0023800R**	No tiene fuente de alimentación / It doesn't have power supply

Iluminación / Lighting

APLIQUE / Light	
A813070000	400 mm

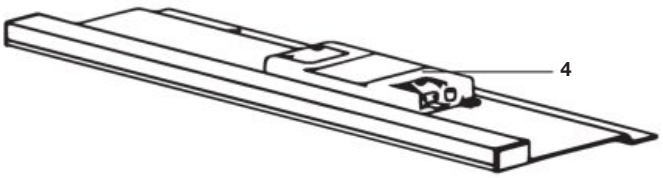

				€
4	A	**AU0023500R**	150 mm	19,70
	A	**AU0023400R**	280 mm	31,20
	A	**AU0023800R**	400 mm	19,50
	A	**AU0023800R**	500 mm	19,50
	A	**AU0023300R**	800 mm	36,00
5	A	**AU0024000R**	800 mm	2,25
6	A	**AU0062000R**		3,10

Smartlight

Iluminación / Lighting

APLIQUE / Light	
A813071000	280 mm
A813072000	500 mm

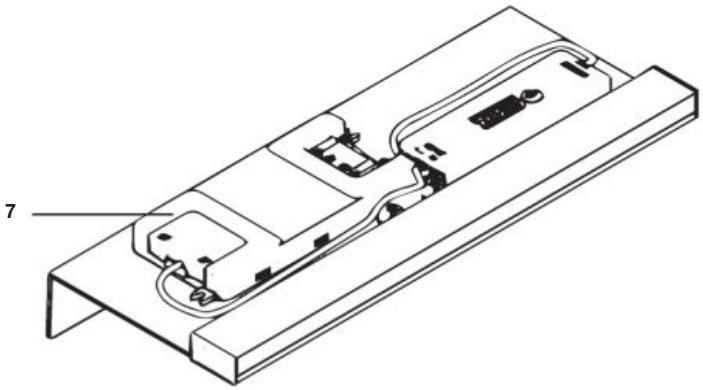

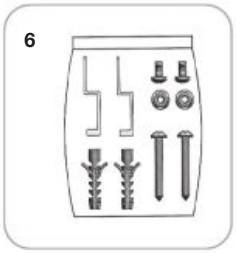

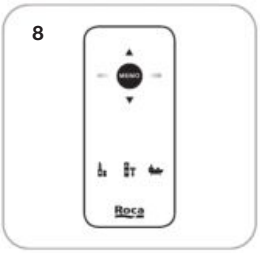

			€
6	**AU0062000R**		3,10
7	**AU0031100R**	280 mm	25,70
	AU0031200R	500 mm	38,30
8	**AU0027400R**		16,80

Griferías y columnas
Faucets & columns



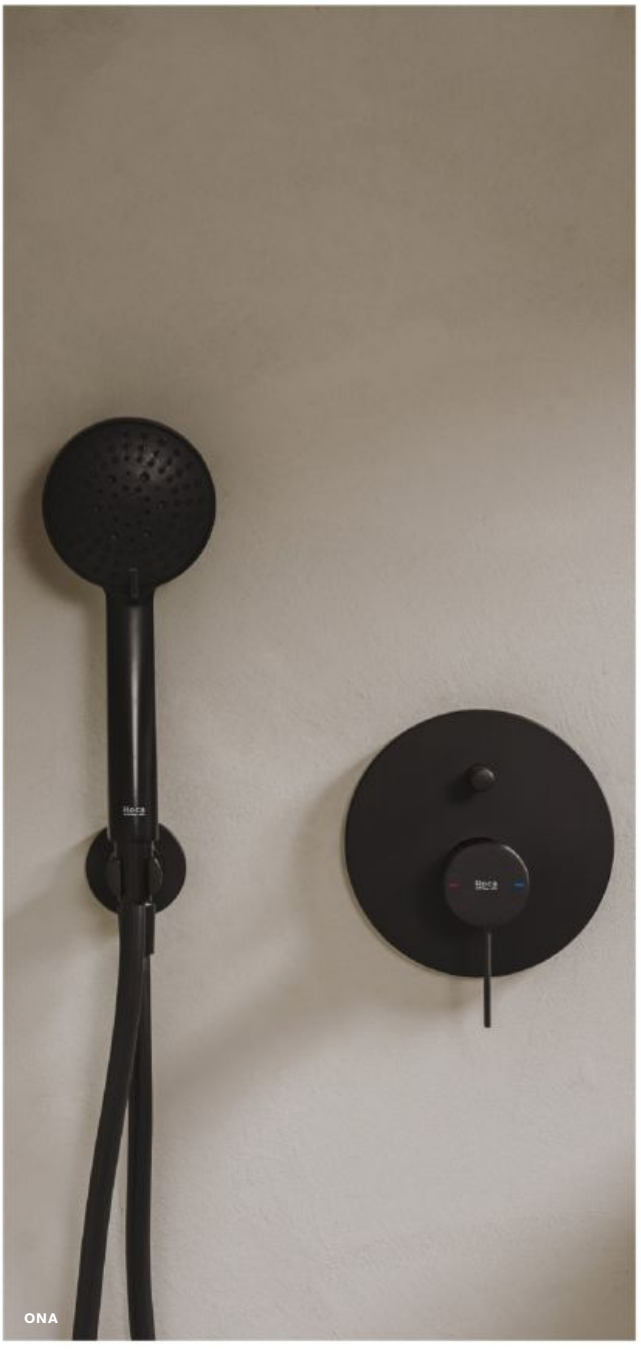

Griferías / Faucets

486 **Armani / Casa - Colección Baia**
Armani / Casa - Baia Collection

489 **Armani / Casa - Colección Island**
Armani / Casa - Island Collection

496 **Nu**

503 **Insignia / Insignia Colors**

507 **Pals**

511 **L90 C**

512 **L90**

519 **Naia / Naia Colors**

523 **Ona**

529 **Evol**

530 **Thesis**

533 **Lanta**

534 **Targa-N**

540 **Targa**

544 **Atlas**

548 **Malva**

550 **Monodin-N**

553 **Monodin**

555 **Cala**

557 **L20**

560 **Alfa**

561 **Victoria Plus**

564 **Victoria**

566 **Loft**

571 **Carmen**

574 **Brava-N**

577 **Termostatos Gran Caudal**
High flow thermostat

578 **T-3000 Switch**

579 **T-2000**

580 **T-1000 Square**

581 **T-1000 Round / T-1000 Round Colors**

584 **T-500**

588 **Victoria (T-500)**

590 **Puzzle-T**

592 **Puzzle**

593 **RocaBox Universal**

594 **RocaBox Monomando**
RocaBox Single-lever

595 **RocaBox Termostático**
RocaBox Thermostatic

596 **Cala RocaBox**

597 **Victoria Pro**

599 **M2-N**

601 **Modena**

602 **Moai**

606 **Singles**

607 **BCN**

608 **Logica-N**

610 **Monodin**

612 **Florentina**

614 **Element**

615 **Brava**

618 **Hide & Seat**

619 **Frontalis**

620 **Singles Open**

621 **Urban**

622 **Esmai**

624 **Gante**

625 **T-5000 (Panama)**

626 **Amura**

628 **Touch**

630 **Monojet**

631 **Vectra**

632 **Betap**

634 **Loft Elite**

636 **Verona**

638 **Prada**

639 **Kendo**

640 **Silver Shadow-Crown**

642 **M2**

643 **Logica**

645 **Monodin Top**

647 **Victoria Plus**

648 **Brava Retro**

651 **Atai**

654 **Fit**

655 **Duchas, rociadores y barras**
Showers, shower heads & bars

657 **Embellecedores, rosetones y caperuzas**
Trimplates, rosettes & caps

658 **Manecillas accionamiento monomandos**
Single-lever handles

661 **Crucetas**
Crossheads

662 **Índices /** Indexs

663 **Monturas**
Headworks

664 **Cartuchos**
Cartridges

665 **Inversores y desviadores**
Inverters & diverters

668 **Flexibles de alimentación y ducha**
Flexible and shower hoses

669 **Aireadores, rompechorros y limitadores**
Aerators, flow straightners & limiters

672 **Desagües universales para lavabo y bidé**
Basin & bidet universal wastes

673 **Desagües**
Wastes

674 **Complementos fijación lavabo**
Basin fixation complements

675 **Recambios varios grifería**
Faucet various spare parts

Columnas de ducha / Shower columns

676 **Deck-T**

677 **Level-T**

678 **Index-T**

681 **Even-T Square**

683 **Even-T Round**

684 **Even-T**

685 **Victoria-T**

687 **Victoria-T Plus**

692 **Victoria-T Basic**

694 **Even-M**

696 **Vega, Vega Plus**

697 **L-20**

698 **Victoria-Monomando Plus**

700 **Victoria Monomando Basic**

702 **Deck M, Deck S**

703 **Victoria-C**

704 **Loft**

705 **Victoria Connect**

706 **Carmen**

707 **Eternal**

708 **Essential**

709 **Essential 2.0**

710 **Evolution**

713 **Flat**

715 **Otras series de columnas**
Other column series

717 **Kits de ducha /** Shower kits

718 **Sets de ducha /** Shower sets

Caños para bañera / Bath spouts

719 **Insignia**

719 **Lanta**

Conjuntos de ducha para bidé /
Shower kit mixers for bidet

720 **Flowdream**

720 **Be Fresh**

Griferías para cocina / Kitchen faucets

722 **Syra-E**

723 **Syra**

724 **Syra-F**

725 **Glera Pro**

726 **Glera**

727 **Ona**

728 **Cala**

729 **L90**

730 **Mencia**

731 **L20**

733 **Victoria**

735 **Victoria Plus**

736 **Inversores**
Inverters

Armani / Casa - Colección Baia
Armani / Casa - Baia Collection

Mezclador bimando de repisa para lavabo
Deck-mounted 3-hole basin mixer

A5A3676C00	Cromado / Chromed
A5A3676VC0	Greige
A5A3676VS0	Acero cepillado / Brushed Steel

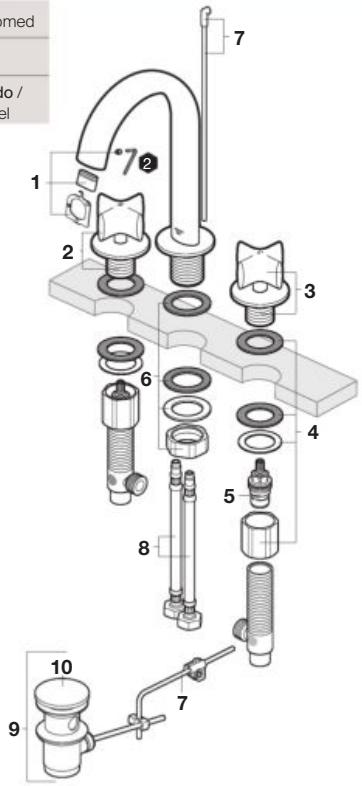

Mezclador bimando de repisa para bidé
Deck-mounted 3-hole bide mixer

A5A7176C00	Cromado / Chromed
A5A7176VC0	Greige
A5A7176VS0	Acero cepillado / Brushed Steel

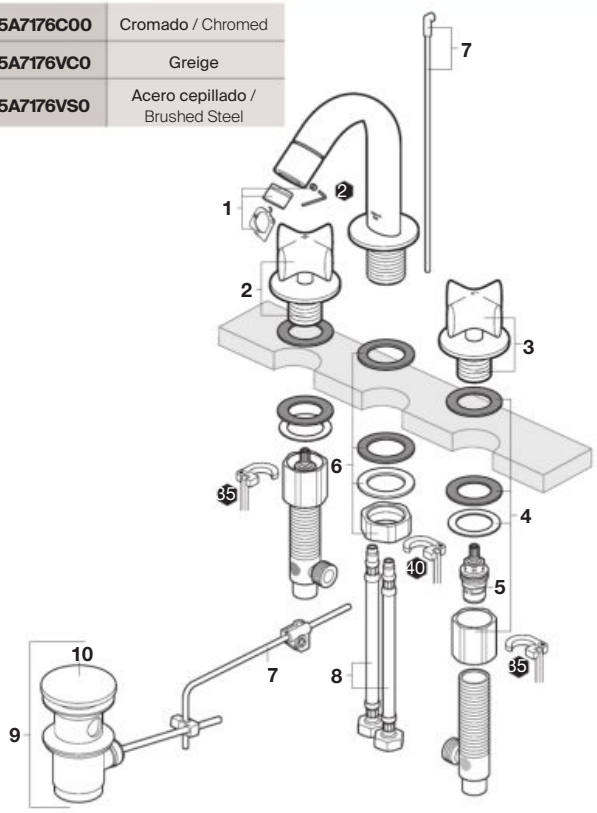

Mezclador bimando empotrable para lavabo
3-hole built-in basin mixer

179 X 249 MM, CON CAÑO CENTRAL DE 180 MM DE LARGO / 179 X 249 MM, CENTRAL SPOUT 180 MM OF LENGHT	
A5A3576C00	Cromado / Chromed
A5A3576VC0	Greige
A5A3576VS0	Acero cepillado / Brushed Steel

232 X 249 MM, CON CAÑO CENTRAL DE 230 MM DE LARGO / 232 X 249 MM, CENTRAL SPOUT 230 MM OF LENGTH	
A5A4476C00	Cromado / Chromed
A5A4476VC0	Greige
A5A4476VS0	Acero cepillado / Brushed Steel

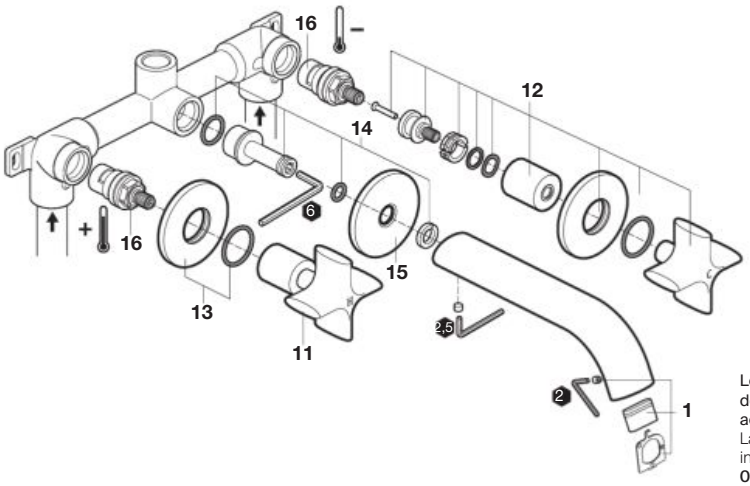

H: Agua caliente / Hot water
C: Agua fría / Cold water

Los ultimos dígitos de la referencia de recambio indican el código del acabado:
Last digits of spare part reference indicate finish code:
00 Cromado / Chromed
VC Greige
VS Acero cepillado / Brushed Steel

			€
1	**AG0160600R**		20,60
	AG0160700R		183,00
2	**AG01607VCR**	H	244,00
	AG01607VSR		244,00
	AG0160800R		183,00
3	**AG01608VCR**	C	244,00
	AG01608VSR		244,00
4	**AG0160900R**		39,20
5	**AG0153400R**		23,30
6	**AG0161000R**		37,30

		€
	AG0033600R	164,00
7	**AG00336VCR**	177,00
	AG00336VSR	122,00
8	**AG0103808R**	2,05
	AG0075400R	33,80
9	**AG00754VCR**	146,00
	AG00754VSR	146,00
	AG0096200R	7,48
10	**AG00962VCR**	45,80
	AG00962VSR	45,80

			€
	AG0161200R		135,00
11	**AG01612VCR**	H	195,00
	AG01612VSR		195,00
	AG0161300R		135,00
12	**AG01613VCR**	C	195,00
	AG01613VSR		195,00
	AG0161400R		31,80
13	**AG01614VCR**		54,10
	AG01614VSR		54,10
14	**AG0161500R**		20,90

		€
	AG0161600R	44,20
15	**AG01616VCR**	66,40
	AG01616VSR	66,40
16	**AG0161800R**	40,30

Armani / Casa - Colección Baia / Armani / Casa - Baia Collection

Mezclador exterior de pie para baño-ducha termostático
Floorstanding thermostatic bath-shower mixer

A5A2776C00	Cromado / Chromed
A5A2776VC0	Greige
A5A2776VS0	Acero cepillado / Brushed Steel

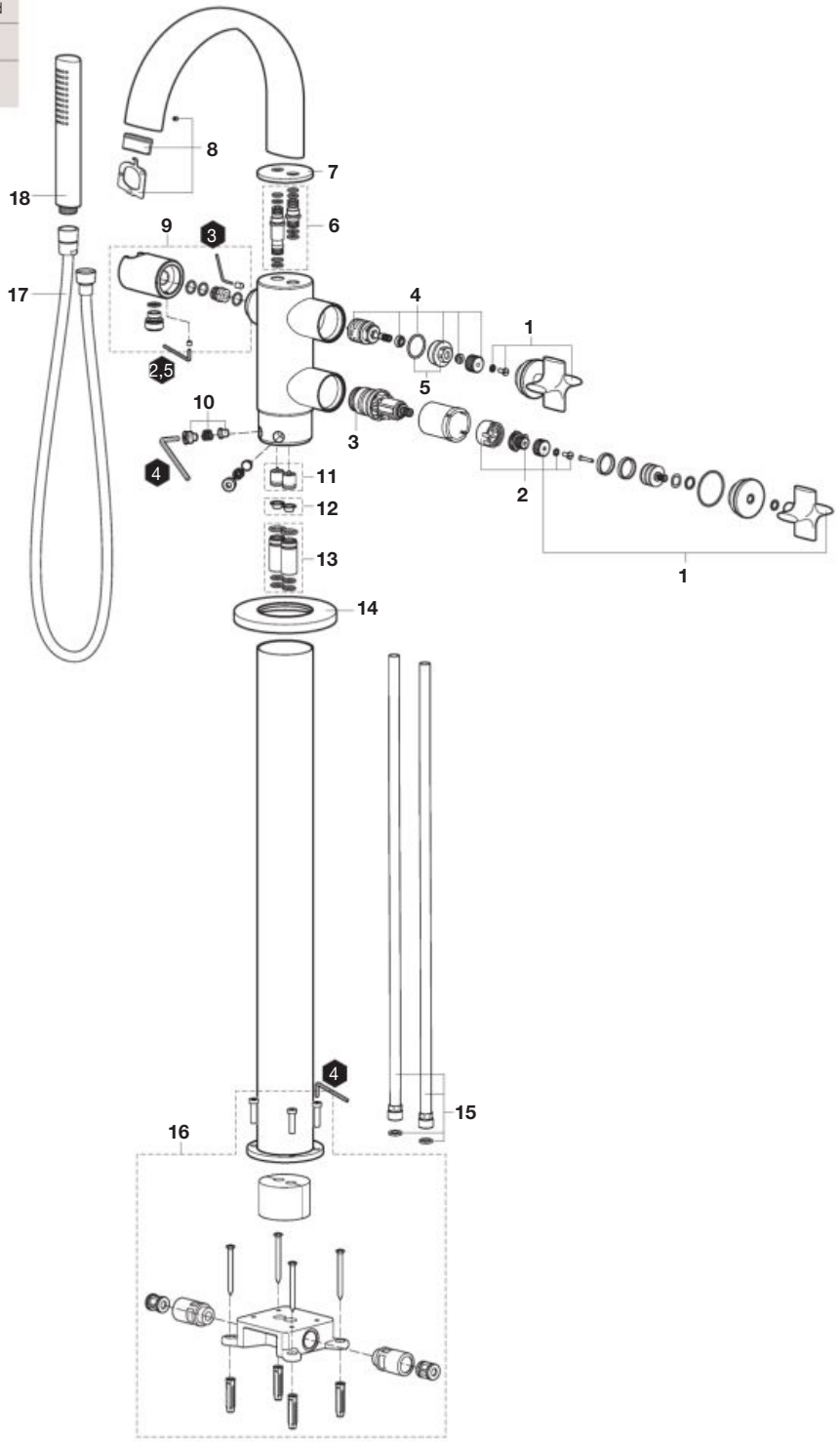

Los ultimos dígitos de la referencia de recambio indican el código del acabado:
Last digits of spare part reference indicate finish code:
00 Cromado / Chromed
VC Greige
VS Acero cepillado / Brushed Steel

		€
	AG0162000R	242,00
1	**AG01620VCR**	298,00
	AG01620VSR	298,00
2	**AG0012303R**	5,18
3	**A525028003**	81,70
4	**AG0162700R**	22,10
5	**AG0030603R**	48,60
6	**AG0163000R**	49,70

		€
	AG0164100R	29,90
7	**AG01641VCR**	53,20
	AG01641VSR	53,20
8	**AG0162800R**	27,90
	AG0162900R	124,00
9	**AG01629VCR**	170,00
	AG01629VSR	170,00

		€
	AG0163100R	146,00
10	**AG01631VCR**	165,00
	AG01631VSR	108,00
11	**AG0026307R**	5,83
12	**AG0026403R**	1,68
13	**AG0128103R**	44,70

		€
	AG0162600R	130,00
14	**AG01626VCR**	168,00
	AG01626VSR	168,00
15	**AG0163200R**	100,00
16	**AG0163300R**	232,00
	AG0192900R	44,90
17	**AG01929VCR**	38,90
	AG01929VSR	156,00

		€
	AG0012600R	200,00
18	**AG00126VCR**	248,00
	AG00126VSR	292,00

Armani / Casa - Colección Baia / Armani / Casa - Baia Collection

Columna de ducha termostática empotrada
Thermostatic shower column

A5A9776C00	Cromado / Chromed
A5A9776VC0	Greige
A5A9776VS0	Acero cepillado / Brushed Steel

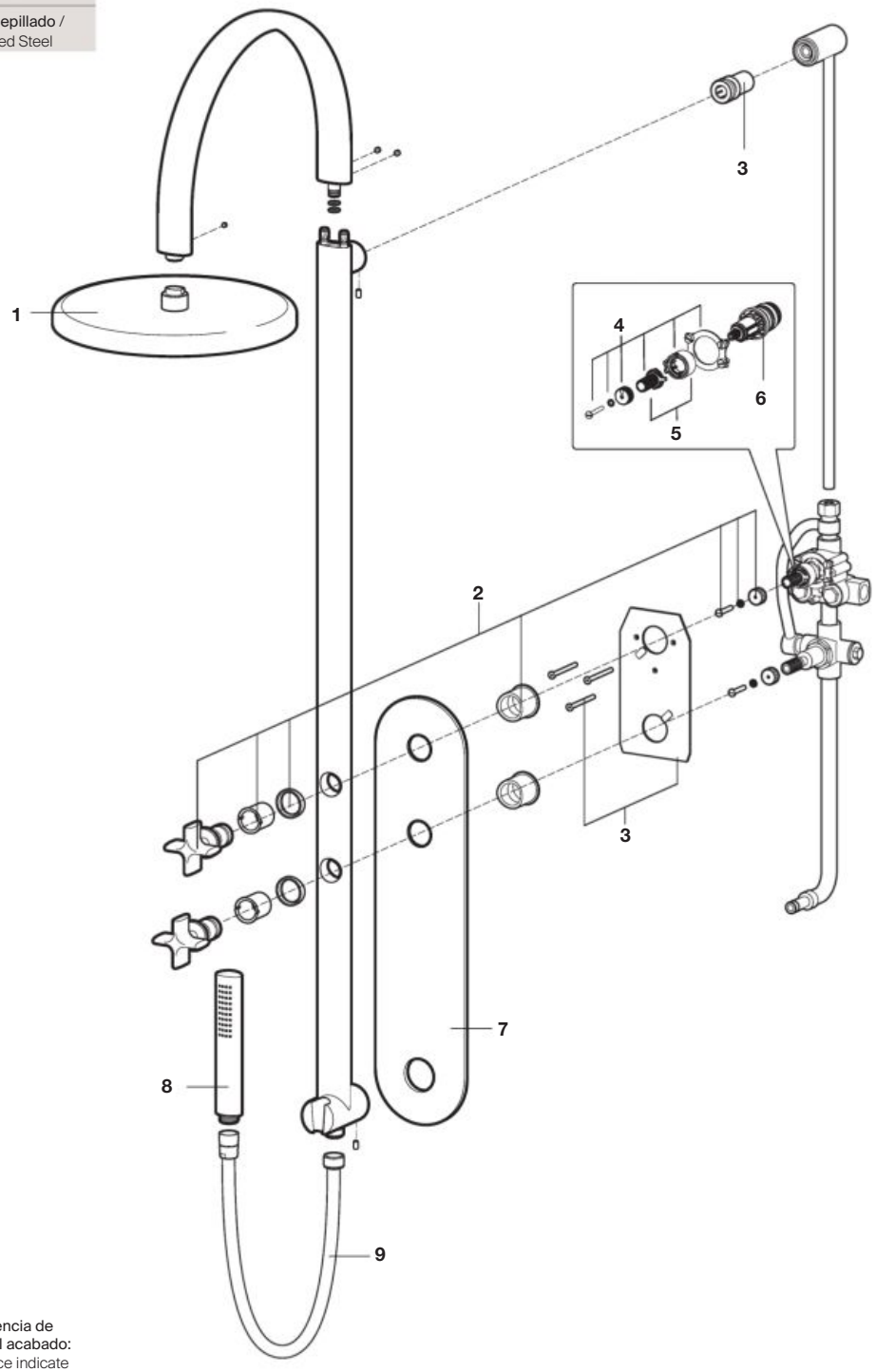

Los ultimos dígitos de la referencia de recambio indican el código del acabado:
Last digits of spare part reference indicate finish code:
00 Cromado / Chromed
VC Greige
VS Acero cepillado / Brushed Steel

		€
	AG0227600R	-
1	**AG02276VCR**	-
	AG02276VSR	406,00
	AG0162000R	242,00
2	**AG01620VCR**	298,00
	AG01620VSR	298,00

		€
3	**AG0162100R**	99,10
4	**AG0162200R**	47,40
5	**AG0012303R**	5,18
6	**A525028003**	81,70

		€
	AG0162300R	121,00
7	**AG01623VCR**	268,00
	AG01623VSR	121,00
	AG0012600R	200,00
8	**AG00126VCR**	248,00
	AG00126VSR	292,00

		€
	A525009800	27,10
9	**A5250098VC**	193,00
	A5250098VS	164,00

Armani / Casa - Colección Island
Armani / Casa - Island Collection

Mezclador monomando para lavabo
Single side lever washbasin mixer

A5A3976C00	Cromado / Chromed
A5A3976VC0	Greige
A5A3976VG0	Nero
A5A3976VS0	Acero cepillado / Brushed Steel

A5A3876C00	Cromado / Chromed
A5A3876VC0	Greige
A5A3876VG0	Nero
A5A3876VS0	Acero cepillado / Brushed Steel

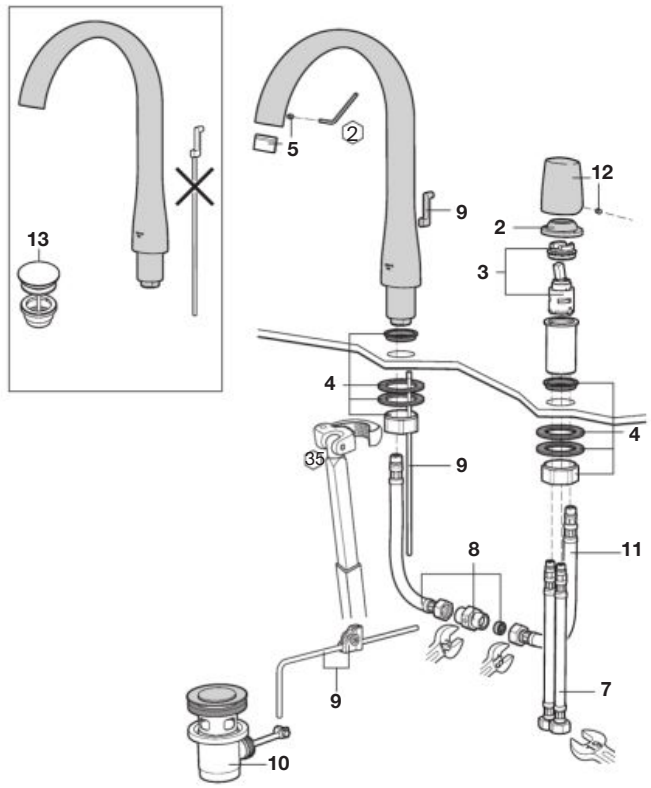

Mezclador monomando para bidé
Single side lever bidet mixer

A5A6076C00	Cromado / Chromed
A5A6076VC0	Greige
A5A6076VG0	Nero
A5A6076VS0	Acero cepillado / Brushed Steel

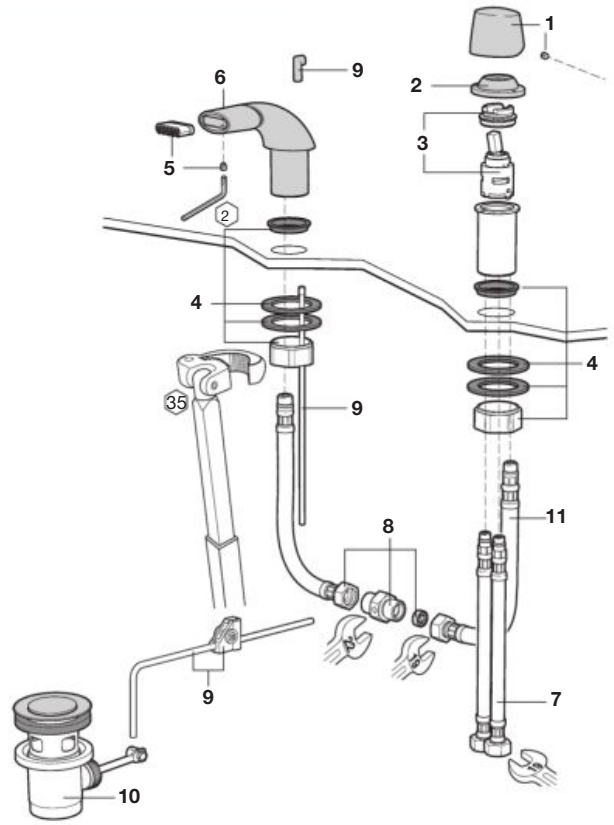

Los ultimos dígitos de la referencia de recambio indican el código del acabado:
Last digits of spare part reference indicate finish code:

00 Cromado / Chromed
VC Greige
VG Nero
VS Acero cepillado / Brushed Steel

		€
1	**AG0010000R**	N.D.
	AG00100VCR	N.D.
	AG00100VGR	N.D.
	AG00100VSR	46,40
2	**AG0010100R**	128,00
	AG00101VCR	138,00
	AG00101VGR	148,00
	AG00101VSR	155,00

		€
3	**AG0010203R**	103,00
4	**AG0010303R**	38,60
5	**AG0010403R**	24,20
6	**AG0010500R**	39,70
	AG00105VCR	64,40
	AG00105VGR	64,40
	AG00105VSR	49,20
7	**AG0010909R**	9,17

		€
8	**AG0010603R**	47,00
9	**AG0010800R**	175,00
	AG00108VCR	187,00
	AG00108VGR	202,00
	AG00108VSR	285,00
10	**AG0007800R**	44,20
11	**A525020509**	13,20

		€
12	**AG0010700R**	N.D.
	AG00107VCR	57,10
	AG00107VGR	57,10
	AG00107VSR	37,90
13	**A506403900**	33,60
	AG01404VCR	58,60
	AG01404VGR	138,00
	AG01404VSR	58,60

Armani / Casa - Colección Island / Armani / Casa - Island Collection

Mezclador termostático empotrado de ducha de 5 funciones
Built-in 5-function thermostatic shower mixer

A5A2976C00	Cromado / Chromed
A5A2976VC0	Greige
A5A2976VG0	Nero
A5A2976VS0	Acero cepillado / Brushed Steel

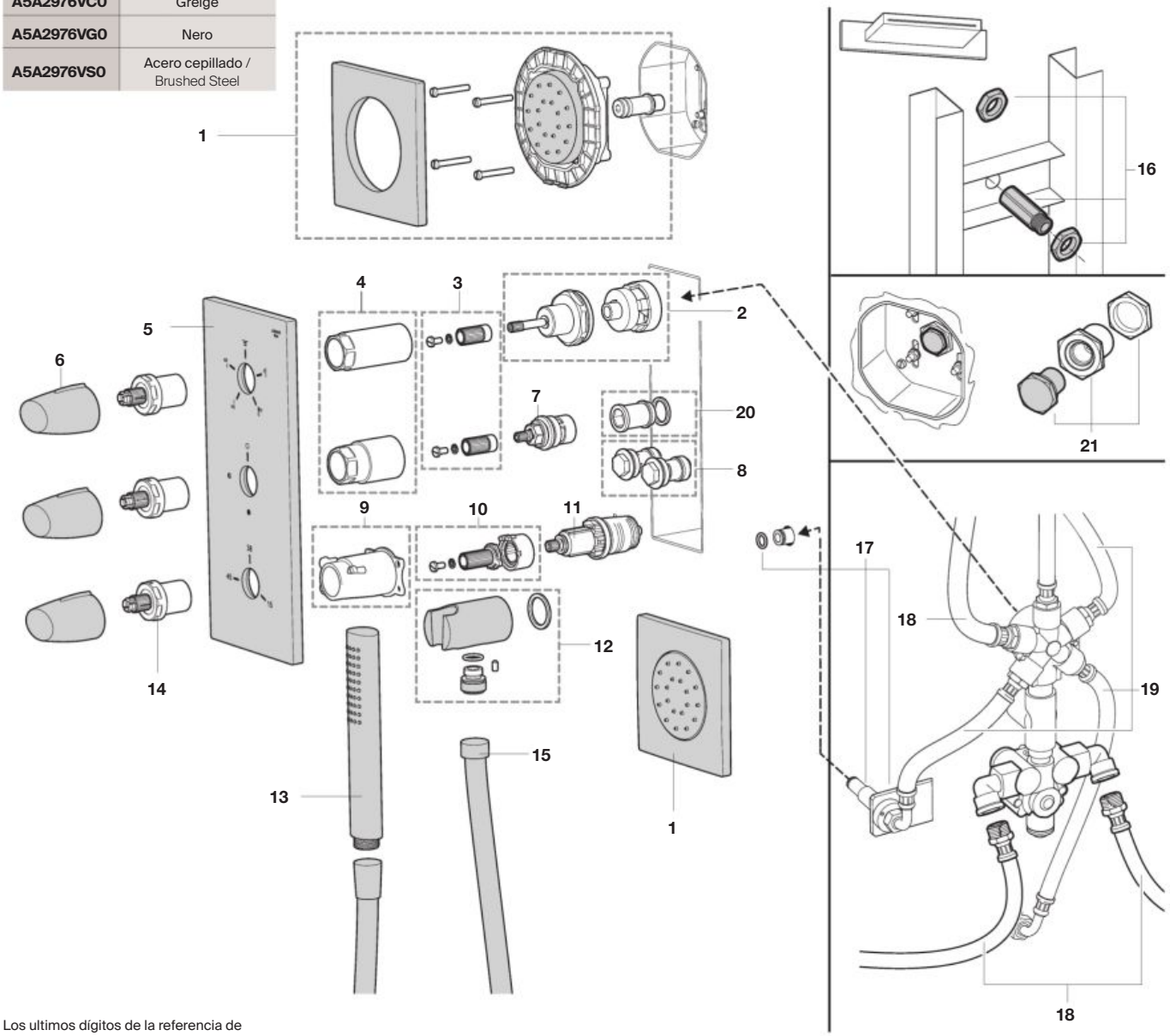

Los ultimos dígitos de la referencia de recambio indican el código del acabado:
Last digits of spare part reference indicate finish code:

00 Cromado / Chromed
VC Greige
VG Nero
VS Acero cepillado / Brushed Steel

		€
1	**AG0011400R**	285,00
	AG00114VCR	478,00
	AG00114VGR	527,00
	AG00114VSR	-
2	**AG0011503R**	252,00
3	**AG0011603R**	28,50
4	**AG0011703R**	46,80
5	**AG0011800R**	592,00
	AG00118VCR	-
	AG00118VGR	-
	AG00118VSR	-

		€
6	**AG0011900R**	80,30
	AG00119VCR	73,70
	AG00119VGR	213,00
	AG00119VSR	102,00
7	**AG0043603R**	64,40
8	**A525018003**	87,70
9	**AG0012203R**	73,70
10	**AG0012303R**	5,18
11	**A525028003**	81,70

		€
12	**AG0039400R**	95,70
	AG00394VCR	111,00
	AG00394VGR	117,00
	AG00394VSR	141,00
13	**AG0012600R**	200,00
	AG00126VCR	248,00
	AG00126VGR	373,00
	AG00126VSR	292,00
14	**AG0012800R**	112,00
	AG00128VCR	120,00
	AG00128VGR	128,00
	AG00128VSR	141,00

		€
15	**A525009800**	27,10
	A5250098VC	193,00
	A5250098VG	213,00
	A5250098VS	164,00
16	**AG0012903R**	69,30
17	**AG0013003R**	109,00
18	**AG0012409R**	54,70
19	**AG0013109R**	90,00
20	**AG0013203R**	22,20
21	**AG0013303R**	N.D.

Armani / Casa - Colección Island / Armani / Casa - Island Collection

Mezclador termostático empotrado de ducha con 2 funciones
Built-in 2-function thermostatic shower mixer

A525882300	Cromado / Chromed
A5258823VC	Greige
A5258823VG	Nero
A5258823VS	Acero cepillado / Brushed Steel

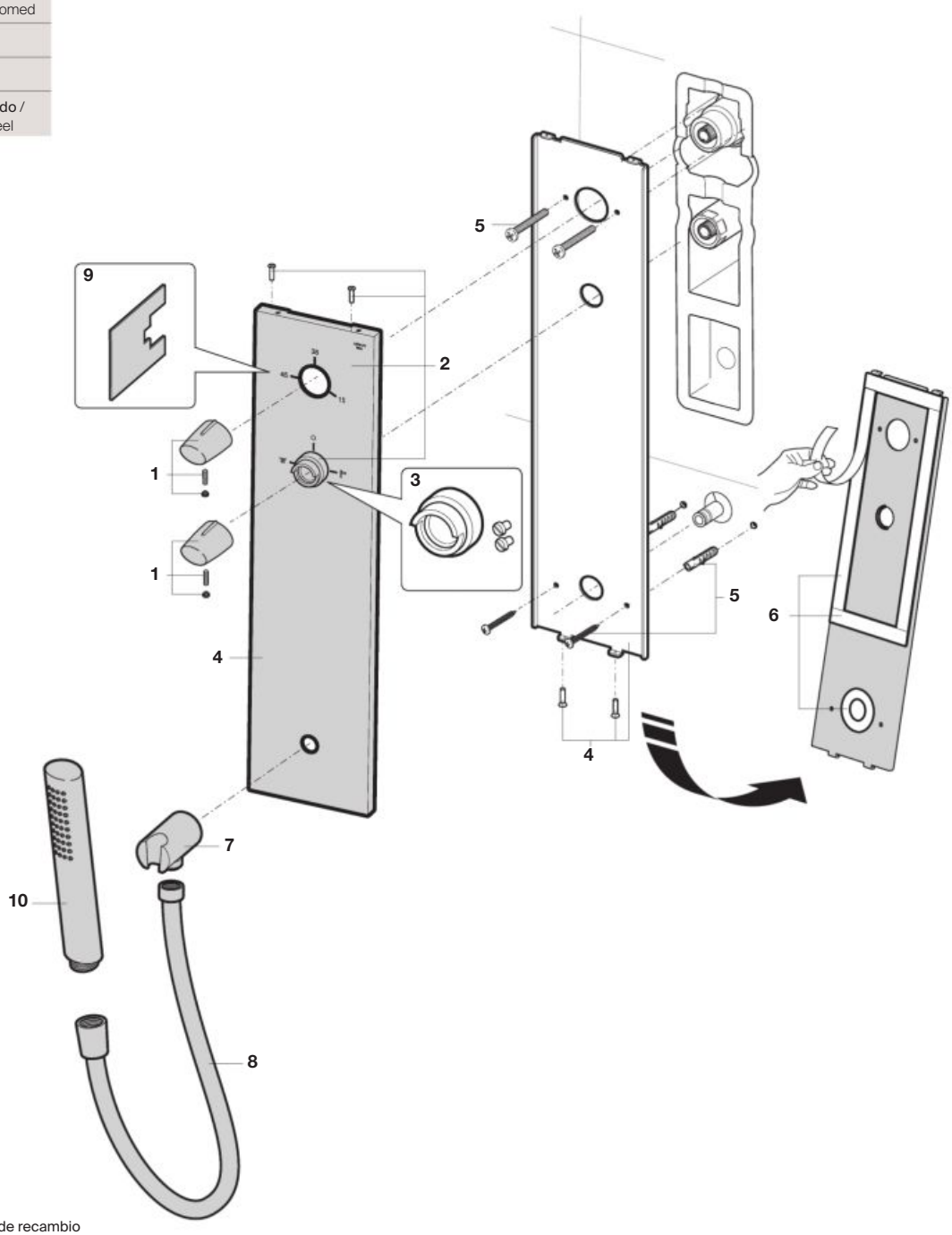

Los ultimos dígitos de la referencia de recambio indican el código del acabado:
Last digits of spare part reference indicate finish code:

00 Cromado / Chromed
VC Greige
VG Nero
VS Acero cepillado / Brushed Steel

		€
1	**AG0011400R**	285,00
	AG00114VCR	478,00
	AG00114VGR	527,00
	AG00114VSR	-
2	**AG0106700R**	373,00
	AG01067VCR	529,00
	AG01067VGR	-
	AG01067VSR	403,00

		€
3	**AG0016609R**	57,60
4	**AG0106503R**	95,30
5	**AG0106203R**	6,56
6	**AG0106407R**	26,50
7	**AG0039400R**	95,70
	AG00394VCR	111,00
	AG00394VGR	117,00
	AG00394VSR	141,00

		€
8	**A525009800**	27,10
	A5250098VC	193,00
	A5250098VG	213,00
	A5250098VS	164,00
9	**AG0016807R**	N.D.

		€
10	**AG0012600R**	200,00
	AG00126VCR	248,00
	AG00126VGR	373,00
	AG00126VSR	292,00

Armani / Casa - Colección Island / Armani / Casa - Island Collection

Elemento empotrado de instalación
Build-in installation element

A525163503

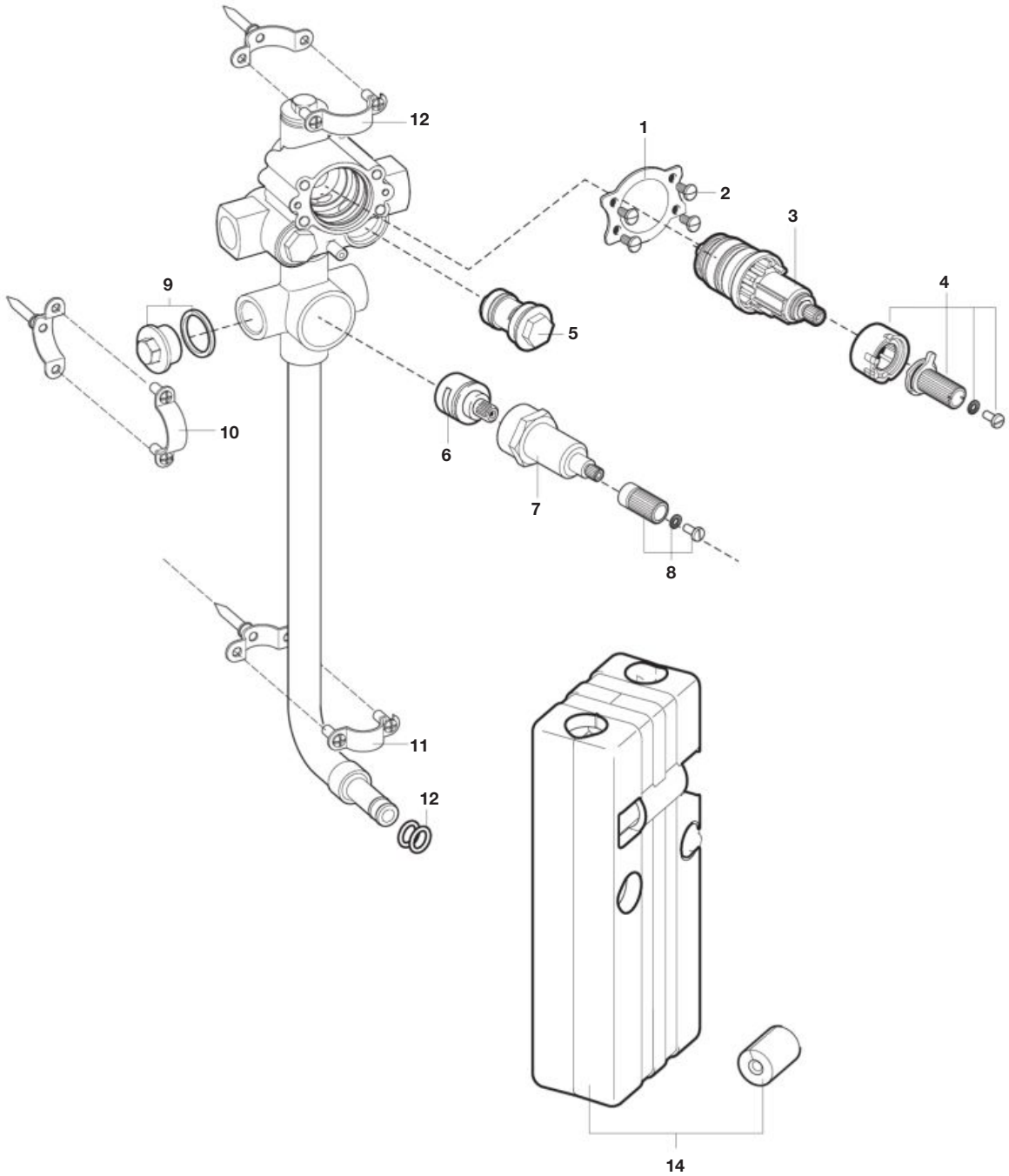

			€
1		**AG0021103R**	18,30
2	4 un		
3		**A525028003**	81,70
4		**AG0012303R**	5,18
5	2 un	**A525018003**	87,70

			€
6		**AG0039900R**	52,70
7		**AG0041103R**	46,50
8	2 un	**AG0102403R**	12,30
9	2 un	**AG0094803R**	15,60

				€
10	2 un	**AG0107007R**	Ø26	N.D.
11	2 un		Ø18	
12	10 un	**AG0040207R**		2,52
14		**AG0106907R**		N.D.

Armani / Casa - Colección Island / Armani / Casa - Island Collection

Caño cascada mural
Wall-mounted cascade spout

A5A1876C00	Cromado / Chromed
A5A1876VC0	Greige
A5A1876VG0	Nero
A5A1876VS0	Acero cepillado / Brushed Steel

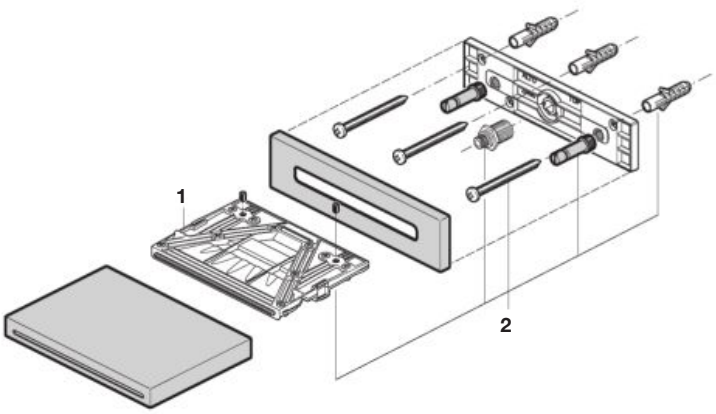

		€
1	**AG0083000R**	113,00
2	**AG0083100R**	73,30

Ducha para higiene íntima con mezclador progresivo
Shower for intimate hygiene with built-in progressive mixer

A525882400	Cromado / Chromed
A5258824VC	Greige
A5258824VG	Nero
A5258824VS	Acero cepillado / Brushed Steel

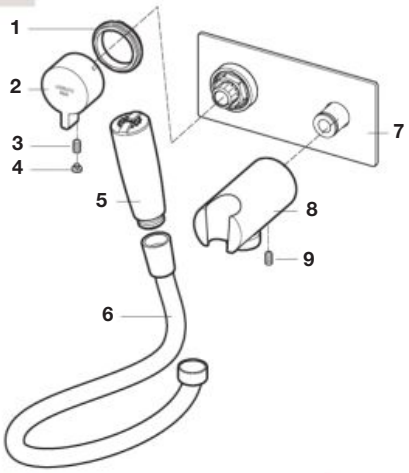

Los ultimos dígitos de la referencia de recambio indican el código del acabado:
Last digits of spare part reference indicate finish code:
00 Cromado / Chromed
VC Greige
VG Nero
VS Acero cepillado / Brushed Steel

		€
1 2 3 4	**AG0107300R**	17,10
1 2 3 4	**AG01073VCR**	38,30
1 2 3 4	**AG01073VGR**	53,80
1 2 3 4	**AG01073VSR**	41,10
5	**AG0107600R**	119,00
	AG01076VCR	165,00
	AG01076VGR	168,00
	AG01076VSR	35,00

		€
6	**AG0107500R**	28,90
	AG01075VCR	212,00
	AG01075VGR	224,00
	AG01075VSR	192,00
7	**AG0107200R**	122,00
	AG01072VCR	177,00
	AG01072VGR	186,00
	AG01072VSR	143,00
8 9	**AG0107400R**	98,20
8 9	**AG01074VCR**	133,00
8 9	**AG01074VGR**	173,00
8 9	**AG01074VSR**	164,00

Ducha para higiene íntima con mezclador progresivo
Shower for intimate hygiene with built-in progressive mixer

A525163600	Cromado / Chromed
A5251636VC	Greige
A5251636VG	Nero
A5251636VS	Acero cepillado / Brushed Steel

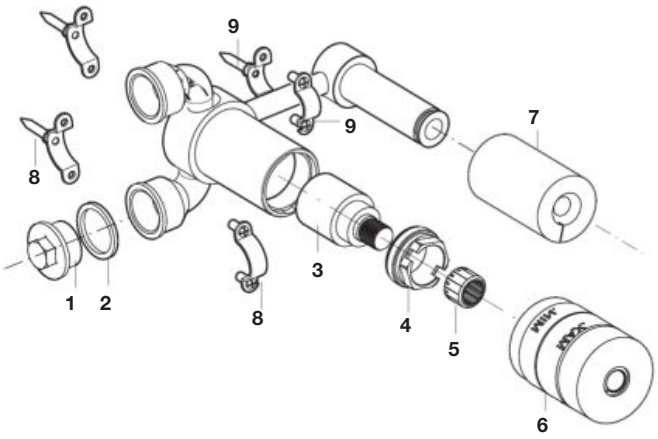

			€
1 2 un	**AG0094803R**		15,60
2 2 un			
3 4 5	**AG0107107R**		36,20
6 7	**AG0107807R**		26,10
8 2 un 9	**AG0107703R**	Ø26 Ø10	5,89

Armani / Casa - Colección Island / Armani / Casa - Island Collection

Ducha para higiene íntima extraíble
Extractable intimate hygiene shower

A5A6776C00	Cromado / Chromed
A5A6776VC0	Greige
A5A6776VG0	Nero
A5A6776VS0	Acero cepillado / Brushed Steel

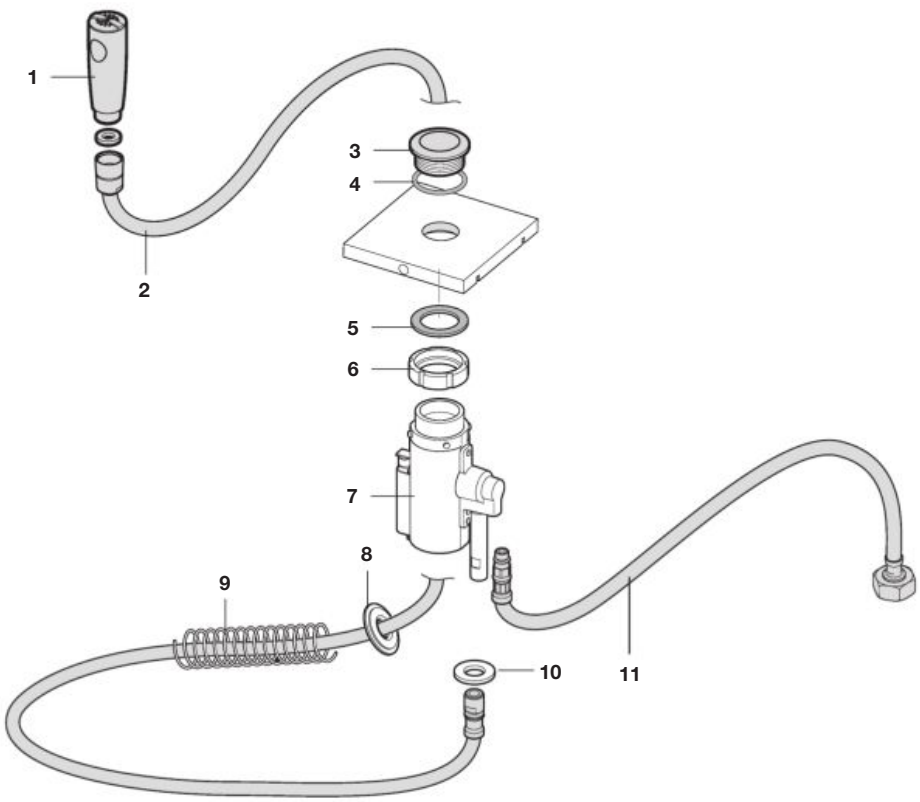

Los ultimos dígitos de la referencia de recambio indican el código del acabado:
Last digits of spare part reference indicate finish code:

00 Cromado / Chromed
VC Greige
VG Nero
VS Acero cepillado / Brushed Steel

		€
1	**AG0107600R**	119,00
	AG01076VCR	165,00
	AG01076VGR	168,00
	AG01076VSR	35,00
2	**AG0108100R**	223,00
	AG01081VCR	227,00
	AG01081VGR	236,00
	AG01081VSR	-
3, 4, 5, 6	**AG0035900R**	N.D.
3, 4, 5, 6	**AG00359VCR**	144,00
3, 4, 5, 6	**AG00359VGR**	N.D.
3, 4, 5, 6	**AG00359VSR**	-

		€
3, 4, 5, 6, 7	**AG0108200R**	N.D.
3, 4, 5, 6, 7	**AG01082VCR**	-
3, 4, 5, 6, 7	**AG01082VGR**	N.D.
3, 4, 5, 6, 7	**AG01082VSR**	-
8, 9, 10	**AG0108303R**	34,10
11	**AG0008009R**	10,60

Armani / Casa - Colección Island / Armani / Casa - Island Collection

Toilet-jet extraible para limpieza inodoro
Retractable toilet-jet for wc cleaning

A5B9076C02	Cromado / Chromed
A5B9076VC2	Greige
A5B9076VG2	Nero
A5B9076VS2	Acero cepillado / Brushed Steel

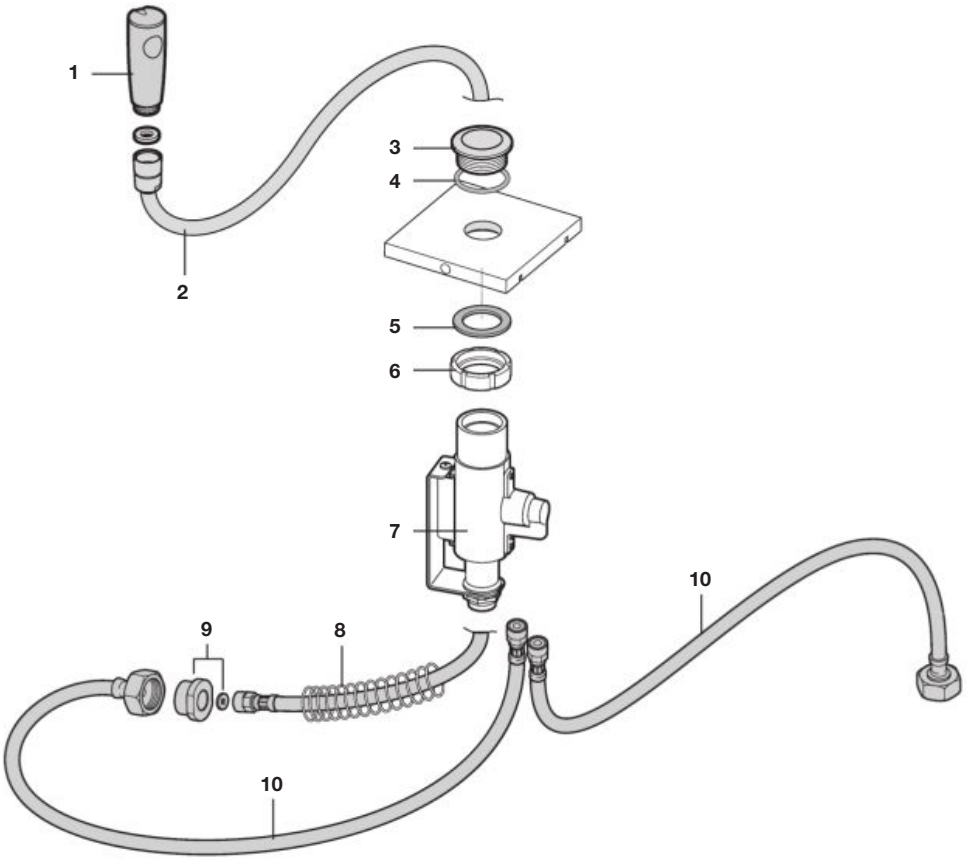

Los ultimos dígitos de la referencia de recambio indican el código del acabado:
Last digits of spare part reference indicate finish code:

00 Cromado / Chromed
VC Greige
VG Nero
VS Acero cepillado / Brushed Steel

		€
1	**AG0036500R**	355,00
	AG00365VCR	180,00
	AG00365VGR	400,00
	AG00365VSR	-
2	**AG0108100R**	223,00
	AG01081VCR	227,00
	AG01081VGR	236,00
	AG01081VSR	-
3 4 5 6	**AG0035900R**	N.D.
3 4 5 6	**AG00359VCR**	144,00
3 4 5 6	**AG00359VGR**	N.D.
3 4 5 6	**AG00359VSR**	-
7	**AG0108400R**	477,00
8	**AG0003903R**	22,60
9	**AG0108303R**	34,10
10	**AG0092409R**	8,86

Nu

Grifería para lavabo / Basin faucet

A5A303F
A5A323F
A5A3B3F
A5A3Y3F

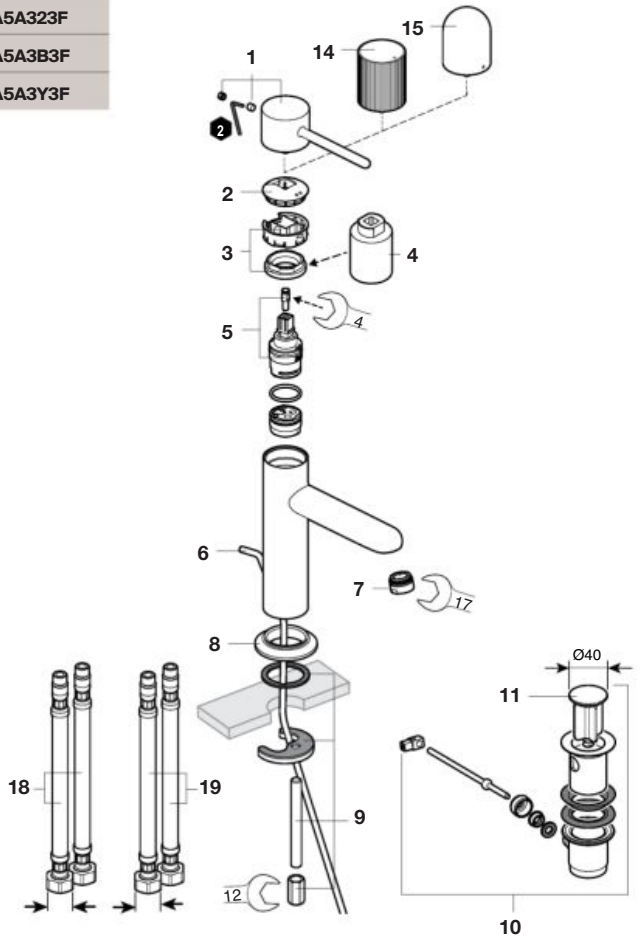

Grifería para bidé / Bidet faucet

A5A623F
A5A6C3F
A5A6X3F

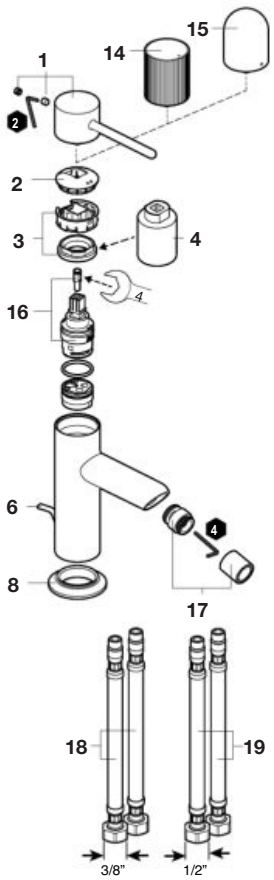

Los ultimos dígitos de la referencia de recambio indican el código del acabado:
Last digits of spare part reference indicate finish code:

00 Cromado / Chromed
CN Negro titanio / Titanium black
P1 Amarillo miel / Honey yellow
P2 Verde menta / Mint green
P0 Azul cobalto / Cobalt blue
P3 Blanco brillo / Glossy white

		€
1	**AG0244600R**	11,50
	AG02446CNR	39,10
	AG02446P1R	42,10
	AG02446P2R	41,80
	AG02446P0R	41,70
	AG02446P3R	41,50
2	**AG0244700R**	4,36
	AG02447CNR	15,30
	AG02447P1R	20,60
	AG02447P2R	19,70
	AG02447P0R	19,70
	AG02447P3R	18,90
3	**AG0244800R**	3,71
4	**AG0244500R**	77,60
5	**AG0223200R**	11,60
6	**AG0223300R**	5,97
	AG02233CNR	56,70

		€
	AG0244900R	7,94
7	**AG02449CNR**	10,80
	AG02449P1R	13,90
	AG02449P2R	13,20
	AG02449P0R	13,20
	AG02449P3R	12,60
	AG0245000R	4,64
8	**AG02450CNR**	8,94
	AG02450P1R	13,20
	AG02450P2R	12,30
	AG02450P0R	12,30
	AG02450P3R	11,60
9	**AG0245100R**	5,30
10	**AG0075300R**	28,80
	AG00753CNR	113,00
11	**AG0096200R**	7,48
	AG00962CNR	83,90

		€
	AG0245200R	38,60
14	**AG02452CNR**	58,30
	AG02452P1R	60,90
	AG02452P2R	60,30
	AG02452P0R	60,30
	AG02452P3R	59,70
	AG0245300R	14,90
15	**AG02453CNR**	29,10
	AG02453P1R	37,10
	AG02453P2R	36,50
	AG02453P0R	36,50
	AG02453P3R	35,90
16	**AG0223600R**	10,50
17	**AG0032300R**	15,90
	AG00323CNR	57,30
18	**AG0223700R**	12,50
19	**AG0223800R**	16,20

Nu

Grifería para lavabo / Basin faucet

A5A343F
A5A3C3F
A5A3X3F

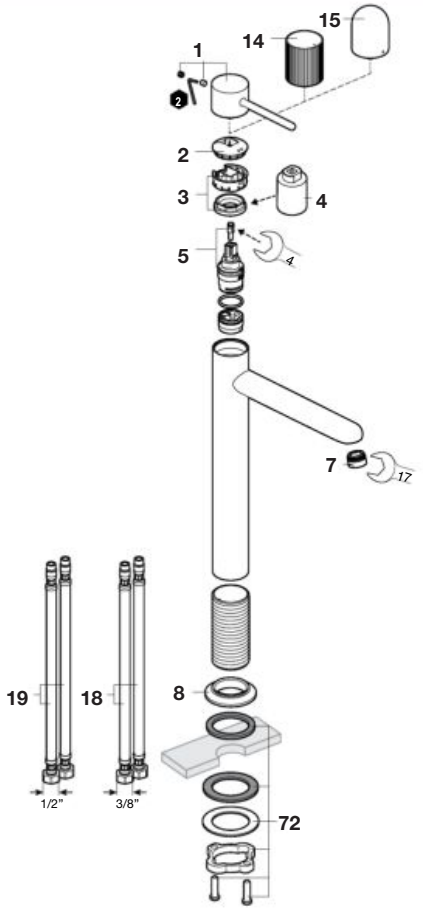

Grifería para lavabo / Basin faucet

A5A4A3F

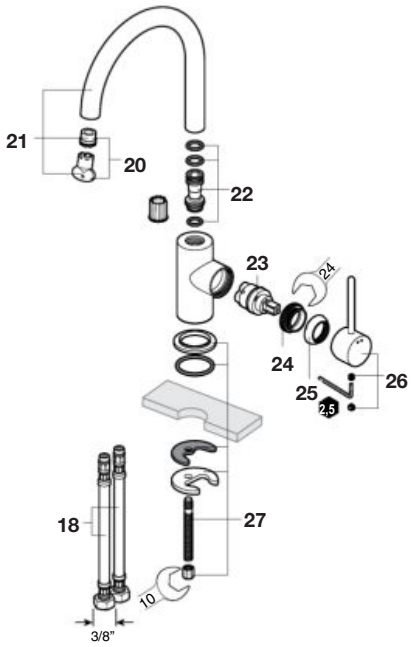

Los ultimos dígitos de la referencia de recambio indican el código del acabado:
Last digits of spare part reference indicate finish code:

00 Cromado / Chromed
CN Negro titanio / Titanium black
P1 Amarillo miel / Honey yellow
P2 Verde menta / Mint green
P0 Azul cobalto / Cobalt blue
P3 Blanco brillo / Glossy white

		€
1	**AG0244600R**	11,50
	AG02446CNR	39,10
	AG02446P1R	42,10
	AG02446P2R	41,80
	AG02446P0R	41,70
	AG02446P3R	41,50
2	**AG0244700R**	4,36
	AG02447CNR	15,30
	AG02447P1R	20,60
	AG02447P2R	19,70
	AG02447P0R	19,70
	AG02447P3R	18,90
3	**AG0244800R**	3,71
4	**AG0244500R**	77,60
5	**AG0223200R**	11,60

		€
7	**AG0244900R**	7,94
	AG02449CNR	10,80
	AG02449P1R	13,90
	AG02449P2R	13,20
	AG02449P0R	13,20
	AG02449P3R	12,60
8	**AG0245000R**	4,64
	AG02450CNR	8,94
	AG02450P1R	13,20
	AG02450P2R	12,30
	AG02450P0R	12,30
	AG02450P3R	11,60
14	**AG0245200R**	38,60
	AG02452CNR	58,30
	AG02452P1R	60,90
	AG02452P2R	60,30
	AG02452P0R	60,30
	AG02452P3R	59,70

		€
15	**AG0245300R**	14,90
	AG02453CNR	29,10
	AG02453P1R	37,10
	AG02453P2R	36,50
	AG02453P0R	36,50
	AG02453P3R	35,90
18	**AG0223700R**	12,50
19	**AG0223800R**	16,20
20	**AG0122100R**	6,76
	AG01221CNR	-
21	**AG0245400R**	68,20
	AG02454CNR	129,00
22	**AG0245500R**	9,41
23	**AG0245600R**	15,30
24	**AG0245700R**	3,97
25	**AG0245800R**	4,97
	AG02458CNR	7,68
26	**AG0245900R**	137,00
	AG02459CNR	30,00
27	**AG0246000R**	107,00
72	**AG0225400R**	29,90

Nu

Grifería para lavabo / Basin faucet

A5A3E3F
A5A3V3F

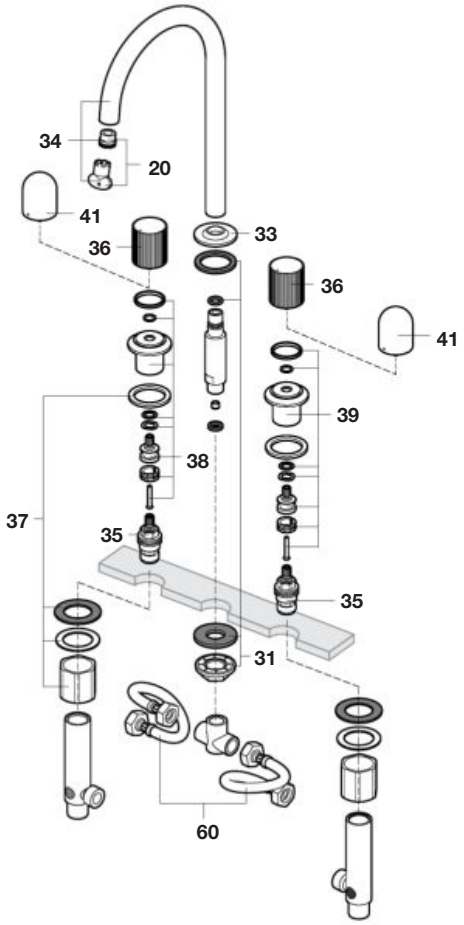

Grifería para lavabo / Basin faucet

A5A3D3F
A5A3W3F

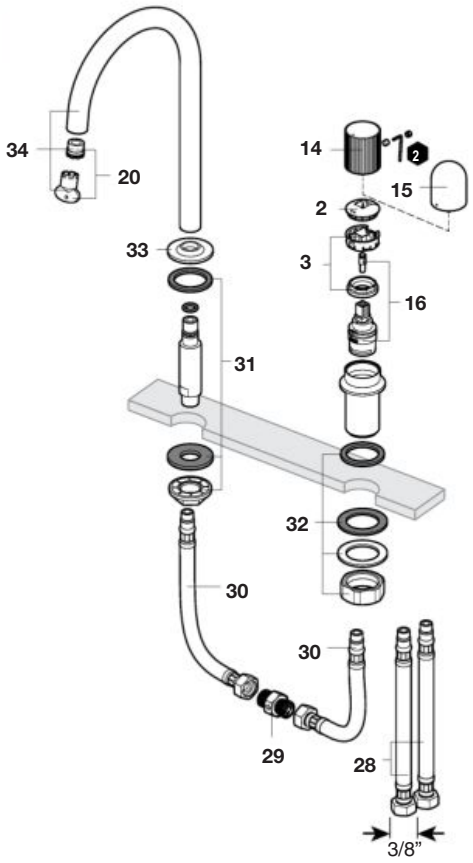

		€
2	AG0244700R	4,36
	AG02447CNR	15,30
	AG02447P1R	20,60
	AG02447P2R	19,70
	AG02447P0R	19,70
	AG02447P3R	18,90
3	AG0244800R	3,71
14	AG0245200R	38,60
	AG02452CNR	58,30
	AG02452P1R	60,90
	AG02452P2R	60,30
	AG02452P0R	60,30
	AG02452P3R	59,70
15	AG0245300R	14,90
	AG02453CNR	29,10
	AG02453P1R	37,10
	AG02453P2R	36,50
	AG02453P0R	36,50
	AG02453P3R	35,90
16	AG0223600R	10,50

		€
20	AG0122100R	6,76
	AG01221CNR	-
28	AG0118308R	12,50
29	AG0007503R	38,20
30	A525020509	13,20
31	AG0246100R	21,70
32	AG0246200R	20,20
33	AG0246300R	5,17
	AG02463CNR	11,20
	AG02463P1R	10,70
	AG02463P2R	9,68
	AG02463P0R	9,68
	AG02463P3R	9,00
34	AG0246400R	48,00
	AG02464CNR	125,00
	AG02464P1R	76,50
	AG02464P2R	75,30
	AG02464P0R	75,30
	AG02464P3R	74,60
35	AG0153400R	23,30

			€
36	AG0246500R		37,30
	AG02465CNR		58,90
	AG02465P1R		54,10
	AG02465P2R		53,50
	AG02465P0R		53,50
	AG02465P3R		52,90
37	AG0246600R		16,10
36+38	AG0246700R		89,40
	AG02467CNR		122,00
	AG02467P1R	HOT	124,00
	AG02467P2R		122,00
	AG02467P0R		122,00
	AG02467P3R		121,00
36+39	AG0246800R		89,70
	AG02468CNR		122,00
	AG02468P1R	COLD	124,00
	AG02468P2R		122,00
	AG02468P0R		122,00
	AG02468P3R		121,00

			€
39+41	AG0246900R		58,90
	AG02469CNR		83,80
	AG02469P1R	COLD	92,90
	AG02469P2R		91,40
	AG02469P0R		91,40
	AG02469P3R		89,90
41	AG0247000R		11,80
	AG02470CNR		26,20
	AG02470P1R		28,60
	AG02470P2R		27,90
	AG02470P0R		27,90
	AG02470P3R		27,30
38+41	AG0247100R		58,60
	AG02471CNR		83,80
	AG02471P1R	HOT	92,90
	AG02471P2R		91,40
	AG02471P0R		91,40
	AG02471P3R		89,90
60	AD0008700R		16,10

Nu

Grifería para ducha / Shower faucet

A5A213F

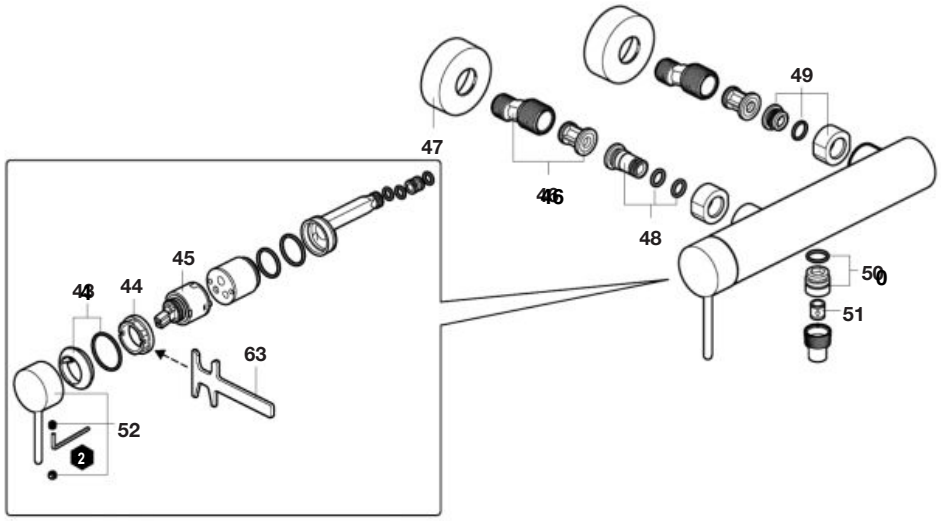

Grifería para ducha / Shower faucet

A5A2A3F

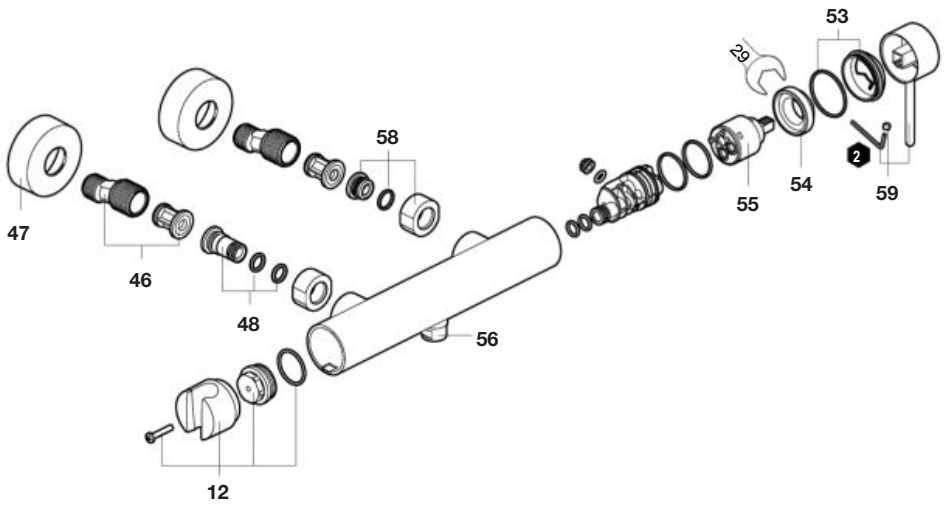

Los ultimos dígitos de la referencia de recambio indican el código del acabado:
Last digits of spare part reference indicate finish code:

00 Cromado / Chromed
CN Negro titanio / Titanium black
P1 Amarillo miel / Honey yellow
P2 Verde menta / Mint green
P0 Azul cobalto / Cobalt blue
P3 Blanco brillo / Glossy white

		€
12	**AG0229700R**	-
	AG02297CNR	-
43	**AG0216600R**	2,89
	AG02166CNR	2,36
44	**AG0126303R**	12,30
45	**AG0247200R**	23,30
46	**AG0103908R**	17,30
47	**AG0116800R**	9,26
	AG01168CNR	69,10
48	**AG0126203R**	16,10
49	**AG0213100R**	8,70
	AG02131CNR	16,20
50	**AG0213000R**	9,06
	AG02130CNR	15,00
	A525024200	9,74

		€
51	**A525005507**	7,44
52	**AG0247300R**	29,90
	AG02473CNR	39,10
53	**AG0247400R**	10,60
	AG02474CNR	12,90
54	**AG0233400R**	11,00
55	**AG0158100R**	8,38
56	**AG0238500R**	22,60
	AG02385CNR	21,80
58	**AG0247600R**	22,70
59	**AG0247700R**	17,60
	AG02477CNR	26,80
63	**A525087203**	9,69

Nu

Grifería para baño y ducha / Bath and shower faucet

A5A023F

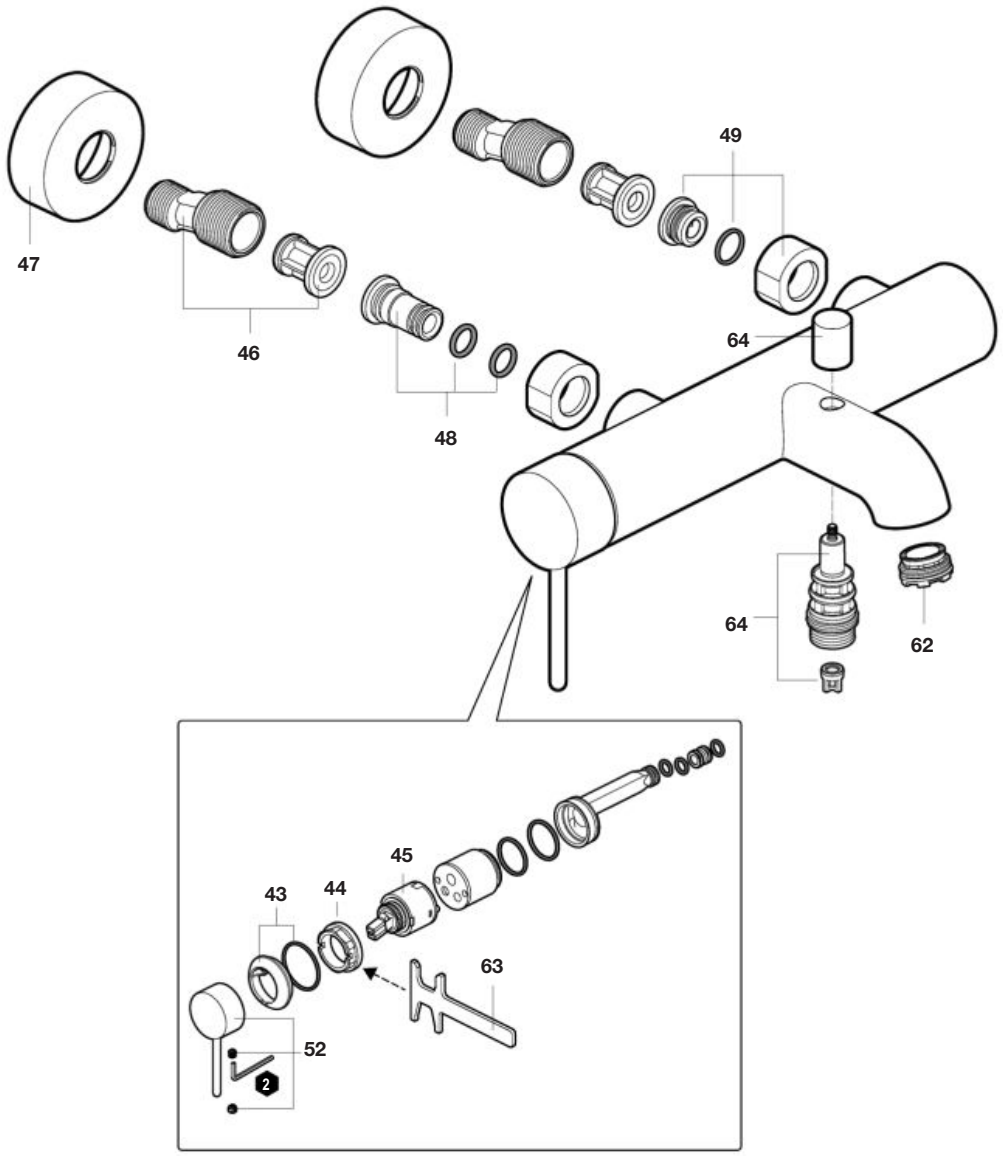

Los ultimos dígitos de la referencia de recambio indican el código del acabado:
Last digits of spare part reference indicate finish code:

00 Cromado / Chromed
CN Negro titanio / Titanium black
P1 Amarillo miel / Honey yellow
P2 Verde menta / Mint green
P0 Azul cobalto / Cobalt blue
P3 Blanco brillo / Glossy white

		€
43	**AG0216600R**	2,89
	AG02166CNR	2,36
44	**AG0126303R**	12,30
45	**AG0247200R**	23,30
46	**AG0103908R**	17,30
47	**AG0116800R**	9,26
	AG01168CNR	69,10
48	**AG0126203R**	16,10

		€
49	**AG0213100R**	8,70
	AG02131CNR	16,20
52	**AG0247300R**	29,90
	AG02473CNR	39,10
62	**AG0216400R**	12,40
63	**A525087203**	9,69
64	**AG0241600R**	7,53
	AG02416CNR	18,00

Nu

Mezclador empotrable para baño-ducha / Wall-mounted bath & shower mixer

A5A0B3F

A5A2B3F

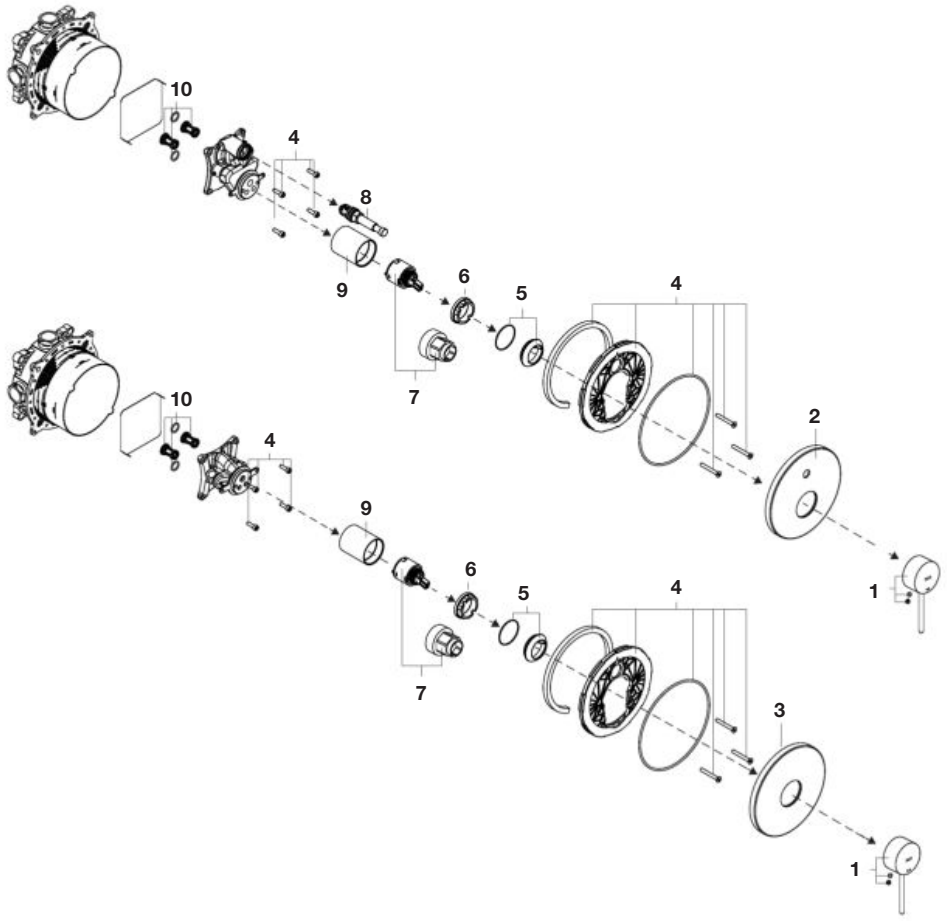

Los ultimos dígitos de la referencia de recambio indican el código del acabado:
Last digits of spare part reference indicate finish code:
00 Cromado / Chromed
CN Negro titanio / Titanium black

			€
1	**AG0247300R**		29,90
	AG02473CNR		39,10
2	**AG0264100R**		27,40
	AG02641CNR		93,30
3	**AG0264200R**		27,30
	AG02642CNR		34,40
4	**AG0120900R**		23,50
5	**AG0216600R**		2,89
	AG02166CNR		2,36
6	**AG0228800R**		22,30
7	**AG0110607R**		9,98
8	**A525006500**	Cromado / Chromed	23,30
	AG02186CNR		73,00
9	**AG0264000R**		10,70
	AG02640CNR		33,20
10	**AG0121000R**		21,70

Nu

Grifería empotrable para lavabo / Wall-mounted basin faucet

A5A353F
+
A5E3502

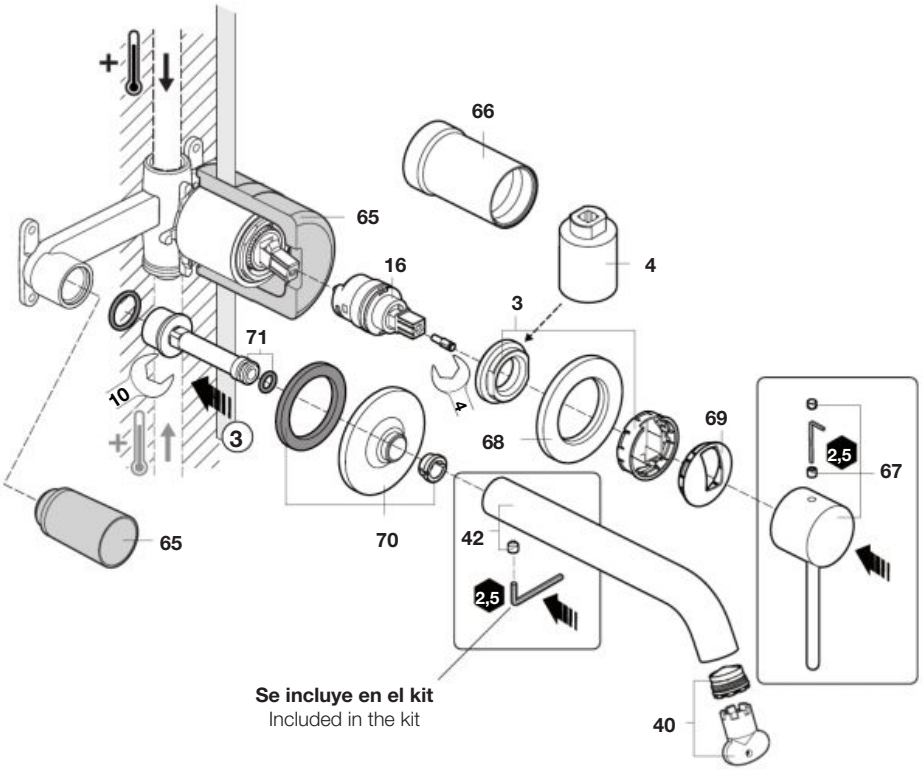

Los ultimos dígitos de la referencia de recambio indican el código del acabado:
Last digits of spare part reference indicate finish code:
00 Cromado / Chromed
CN Negro titanio / Titanium black
P1 Amarillo miel / Honey yellow
P2 Verde menta / Mint green
P0 Azul cobalto / Cobalt blue
P3 Blanco brillo / Glossy white

Se incluye en el kit
Included in the kit

		€
3	**AG0244800R**	3,71
4	**AG0244500R**	77,60
16	**AG0223600R**	10,50
40	**AG0125707R**	12,80
42	**AG0248300R**	58,90
	AG02483CNR	112,00
	AG02483P1R	86,20
	AG02483P2R	84,70
	AG02483P0R	84,70
	AG02483P3R	84,10
65	**AG0230700R**	2,68

		€
66	**AG0247800R**	15,80
	AG02478CNR	36,50
	AG02478P1R	28,60
	AG02478P2R	27,60
	AG02478P0R	27,60
	AG02478P3R	27,00
67	**AG0247900R**	11,70
	AG02479CNR	39,10
	AG02479P1R	42,00
	AG02479P2R	41,70
	AG02479P0R	41,50
	AG02479P3R	41,40

		€
68	**AG0248000R**	8,15
	AG02480CNR	15,90
	AG02480P1R	12,50
	AG02480P2R	11,90
	AG02480P0R	11,90
	AG02480P3R	11,20
69	**AG0248100R**	4,36
	AG02481CNR	6,95
	AG02481P1R	12,30
	AG02481P2R	11,30
	AG02481P0R	11,30
	AG02481P3R	10,70

		€
70	**AG0248200R**	13,70
	AG02482CNR	27,00
	AG02482P1R	19,90
	AG02482P2R	19,20
	AG02482P0R	19,20
	AG02482P3R	18,80
71	**AG0230300R**	10,80

Caño empotrable para bañera / Wall-mounted bathtub spout

A5A083F

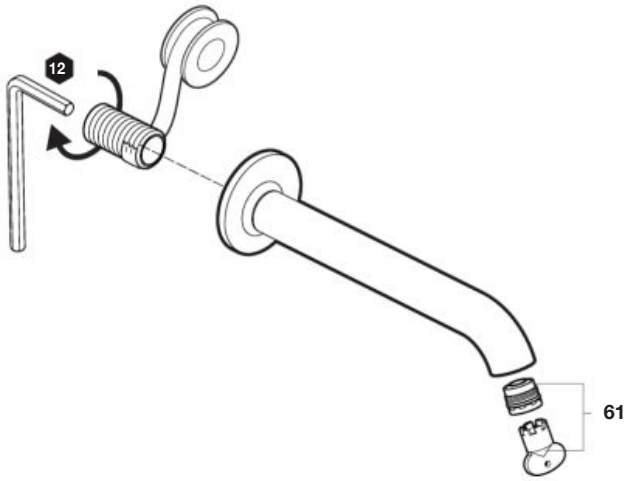

Los ultimos dígitos de la referencia de recambio indican el código del acabado:
Last digits of spare part reference indicate finish code:
00 Cromado / Chromed
CN Negro titanio / Titanium black
P1 Amarillo miel / Honey yellow
P2 Verde menta / Mint green
P0 Azul cobalto / Cobalt blue
P3 Blanco brillo / Glossy white

		€
61	**AG0145600R**	17,40

Insignia / Insignia Colors

Grifería para lavabo / Basin faucet

A5A323A
A5A333A
A5A3B3A

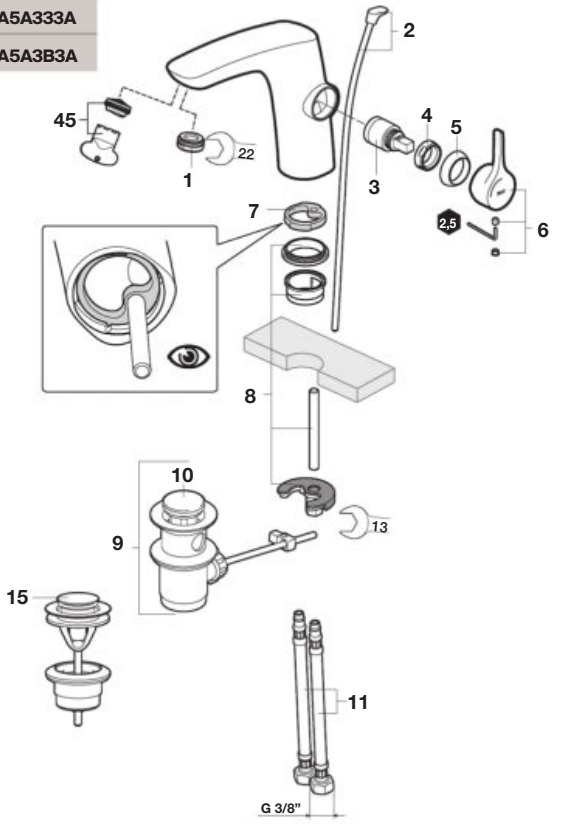

Grifería para lavabo / Basin faucet

A5A343A
A5A3A3A
A5A3C3A

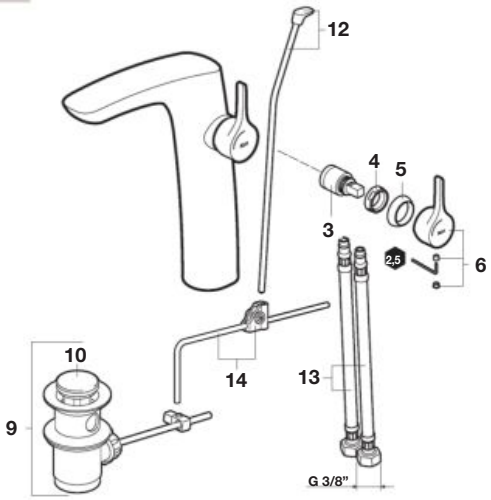

Los ultimos dígitos de la referencia de recambio indican el código del acabado:
Last digits of spare part reference indicate finish code:

00 Cromado / Chromed
CN Negro titanio / Titanium black
RG Oro rosado / Rose gold
NM Negro titanio cepillado / Brushed titanium black

			€
1	**AG0196400R**		6,55
	AG01964CNR		10,20
	AG01964RGR		8,91
	AG01964NMR		15,00
2	**AG0152800R**		9,95
3	**AG0152900R**		7,00
4	**AG0153000R**		30,50
5	**AG0153100R**		2,77
	AG01531CNR		10,90
	AG01531RGR		8,98
	AG01531NMR		15,00
6	**AG0153200R**		9,82
	AG01532CNR		36,10
	AG01532RGR		34,20
	AG01532NMR		42,60
7	**AG0156100R**		7,45
8	**AG0136603R**		9,15
9	**AG0075300R**		28,80
	AG00753CNR		113,00
	AG00753RGR		192,00
	AG00753BMR	Negro titanio cepillado Brushed titanium black	146,00

			€
10	**AG0096200R**		7,48
	AG00962CNR		83,90
	AG00962RGR		142,00
	AG00962BMR	Negro titanio cepillado Brushed titanium black	N.D.
11	**AG0118308R**		12,50
12	**AG0153300R**		9,95
13	**AG0156200R**		6,80
14	**AG0033300R**		30,00
15	**A505400900**		-
	A5054009CN		N.D.
	A5054009RG		-
	A5054009NM		N.D.
16	**AG0122107R**		10,20
17	**AG01966CNR**		32,30
	AG01966RGR		28,80
	AG01966NMR		43,80
	A525003507	Cromado Chromed	38,20
18	**A525020309**		15,00
19	**AG0153400R**		23,30
20	**AG0153500R**		58,20
21	**AG0153600R**		58,20

		€
22	**AG0048703R**	37,60
23	**AG0153700R**	103,00
24	**AG0153800R**	103,00
25	**AG0155000R**	9,41
26	**AG0154100R**	96,40
27	**AG0154200R**	13,20
	AG01542CNR	48,00
	AG01542RGR	39,10
	AG01542NMR	45,00
28	**AG0085300R**	18,00
	AG00853CNR	10,10
	AG00853RGR	7,64
	AG00853NMR	13,70
29	**AG0142100R**	3,20
30	**AG0173300R**	15,50
31	**AG0137200R**	23,30
	AG01372CNR	90,50
	AG01372RGR	91,40
	AG01372NMR	98,90
32	**A5B9B61C00**	-
33	**AG0154400R**	14,90
34	**AB0030900R**	37,00
35	**AG0048303R**	25,20

		€
36	**A525023600**	35,50
37	**A525024200**	9,74
38	**AG0001907R**	11,00
39	**AG0165000R**	21,70
40	**AG0021407R**	16,20
41	**AG0154500R**	26,50
42	**A525006903**	8,56
43	**AG0154600R**	9,29
	AG01546CNR	32,90
	AG01546RGR	27,90
	AG01546NMR	35,80
44	**AG0145800R**	28,60
45	**AG0129807R**	9,55

Insignia / Insignia Colors

Grifería para bidé / Bidet faucet

A5A603A
A5A6A3A

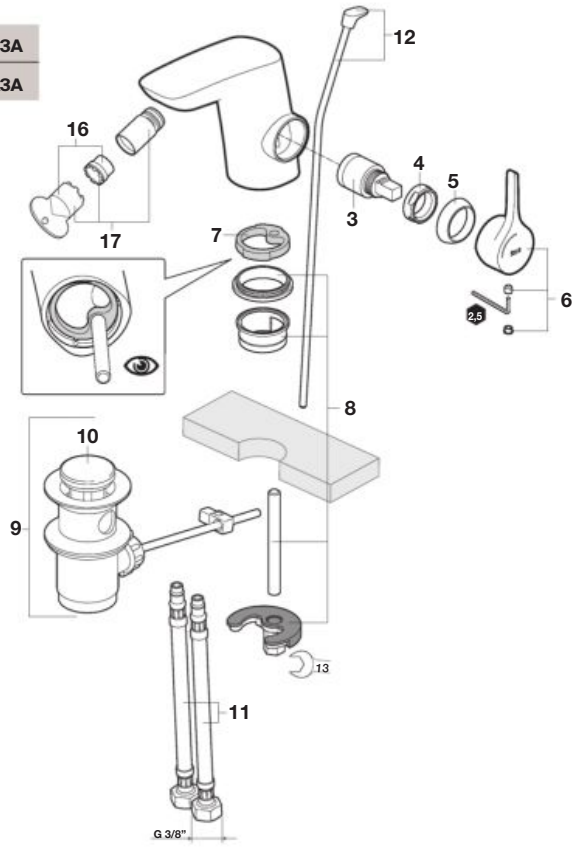

Grifería para lavabo / Basin faucet

A5A353A
A5252206

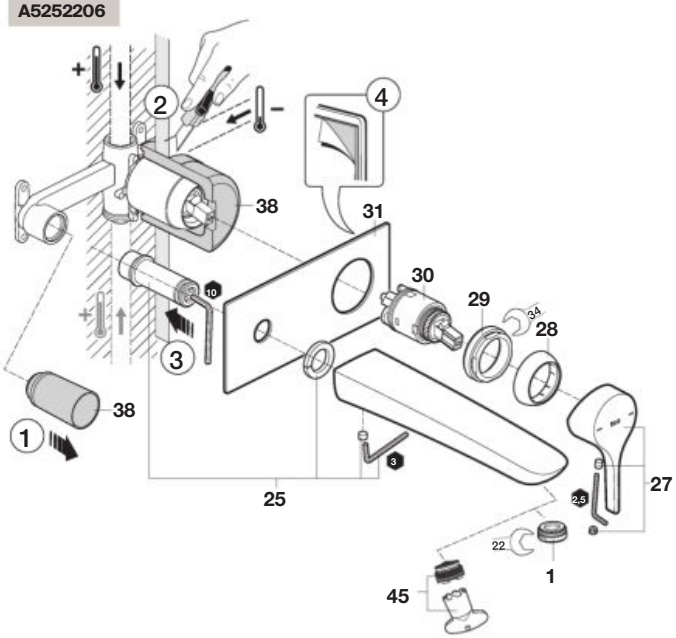

Sustituir los (...) de la referencia por el código del acabado Everlux elegido:
In the product reference replace (..) with the code for the selected finish code:

00 Cromado / Chromed
CN Negro titanio / Titanium black
RG Oro rosado / Rose gold
NM Negro titanio cepillado / Brushed titanium black

			€
1	**AG0196400R**		6,55
	AG01964CNR		10,20
	AG01964RGR		8,91
	AG01964NMR		15,00
2	**AG0152800R**		9,95
3	**AG0152900R**		7,00
4	**AG0153000R**		30,50
5	**AG0153100R**		2,77
	AG01531CNR		10,90
	AG01531RGR		8,98
	AG01531NMR		15,00
6	**AG0153200R**		9,82
	AG01532CNR		36,10
	AG01532RGR		34,20
	AG01532NMR		42,60
7	**AG0156100R**		7,45
8	**AG0136603R**		9,15
9	**AG0075300R**		28,80
	AG00753CNR		113,00
	AG00753RGR		192,00
	AG00753BMR	Negro titanio cepillado Brushed titanium black	146,00

			€
10	**AG0096200R**		7,48
	AG00962CNR		83,90
	AG00962RGR		142,00
	AG00962BMR	Negro titanio cepillado Brushed titanium black	N.D.
11	**AG0118308R**		12,50
12	**AG0153300R**		9,95
13	**AG0156200R**		6,80
14	**AG0033300R**		30,00
15	**A505400900**		-
	A5054009CN		N.D.
	A5054009RG		-
	A5054009NM		N.D.
16	**AG0122107R**		10,20
17	**AG01966CNR**		32,30
	AG01966RGR		28,80
	AG01966NMR		43,80
	A525003507	Cromado Chromed	38,20
18	**A525020309**		15,00
19	**AG0153400R**		23,30
20	**AG0153500R**		58,20
21	**AG0153600R**		58,20

		€
22	**AG0048703R**	37,60
23	**AG0153700R**	103,00
24	**AG0153800R**	103,00
25	**AG0155000R**	9,41
26	**AG0154100R**	96,40
27	**AG0154200R**	13,20
	AG01542CNR	48,00
	AG01542RGR	39,10
	AG01542NMR	45,00
28	**AG0085300R**	18,00
	AG00853CNR	10,10
	AG00853RGR	7,64
	AG00853NMR	13,70
29	**AG0142100R**	3,20
30	**AG0173300R**	15,50
31	**AG0137200R**	23,30
	AG01372CNR	90,50
	AG01372RGR	91,40
	AG01372NMR	98,90
32	**A5B9B61C00**	-
33	**AG0154400R**	14,90
34	**AB0030900R**	37,00
35	**AG0048303R**	25,20

		€
36	**A525023600**	35,50
37	**A525024200**	9,74
38	**AG0001907R**	11,00
39	**AG0165000R**	21,70
40	**AG0021407R**	16,20
41	**AG0154500R**	26,50
42	**A525006903**	8,56
43	**AG0154600R**	9,29
	AG01546CNR	32,90
	AG01546RGR	27,90
	AG01546NMR	35,80
44	**AG0145800R**	28,60
45	**AG0129807R**	9,55

Insignia / Insignia Colors

Grifería para baño y ducha / Bath and shower faucet

A5A093A
A5A183A

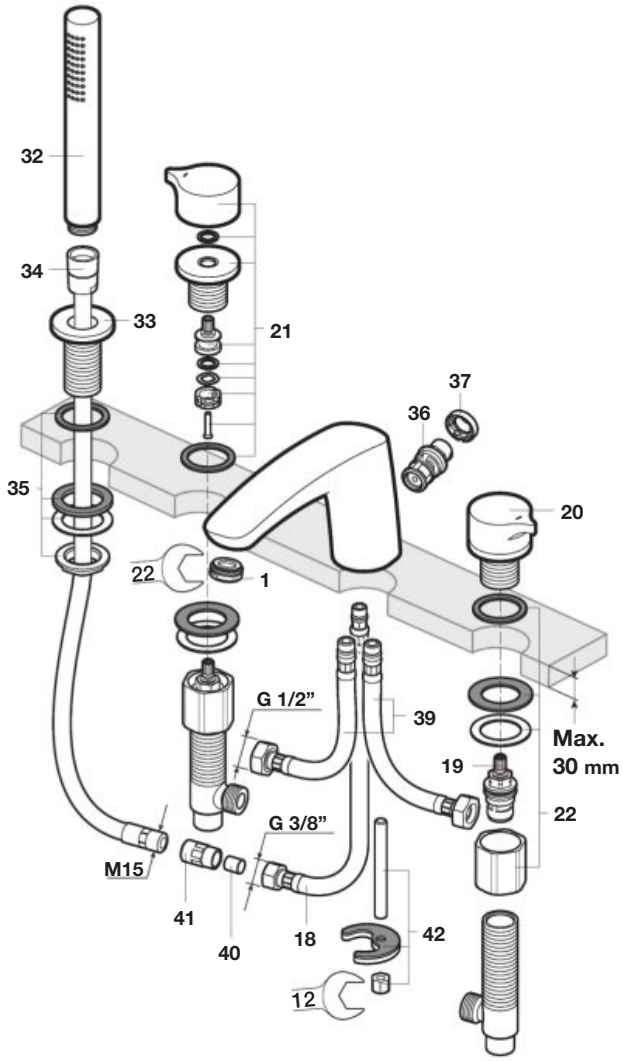

		€
1	**AG0196400R**	6,55
2	**AG0152800R**	9,95
3	**AG0152900R**	7,00
4	**AG0153000R**	30,50
5	**AG0153100R**	2,77
6	**AG0153200R**	9,82
7	**AG0156100R**	7,45
8	**AG0136603R**	9,15
9	**AG0075300R**	28,80
10	**AG0096200R**	7,48
11	**AG0118308R**	12,50
12	**AG0153300R**	9,95
13	**AG0156200R**	6,80
14	**AG0033300R**	30,00
15	**A505400900**	-

		€
16	**AG0122107R**	10,20
17	**A525003507**	38,20
18	**A525020309**	15,00
19	**AG0153400R**	23,30
20	**AG0153500R**	58,20
21	**AG0153600R**	58,20
22	**AG0048703R**	37,60
23	**AG0153700R**	103,00
24	**AG0153800R**	103,00
25	**AG0155000R**	9,41
26	**AG0154100R**	96,40
27	**AG0154200R**	13,20
28	**AG0085300R**	18,00
29	**AG0142100R**	3,20
30	**AG0173300R**	15,50

		€
31	**AG0137200R**	23,30
32	**A5B9B61C00**	-
33	**AG0154400R**	14,90
34	**AB0030900R**	37,00
35	**AG0048303R**	25,20
36	**A525023600**	35,50
37	**A525024200**	9,74
38	**AG0001907R**	11,00
39	**AG0165000R**	21,70
40	**AG0021407R**	16,20
41	**AG0154500R**	26,50
42	**A525006903**	8,56
43	**AG0154600R**	9,29
44	**AG0145800R**	28,60
45	**AG0129807R**	9,55

Insignia / Insignia Colors

Mezclador termostático empotrable para ducha y baño-ducha / Wall-mounted bath & shower thermostatic mixer

A5A0C3A	+
A5A2C3A	

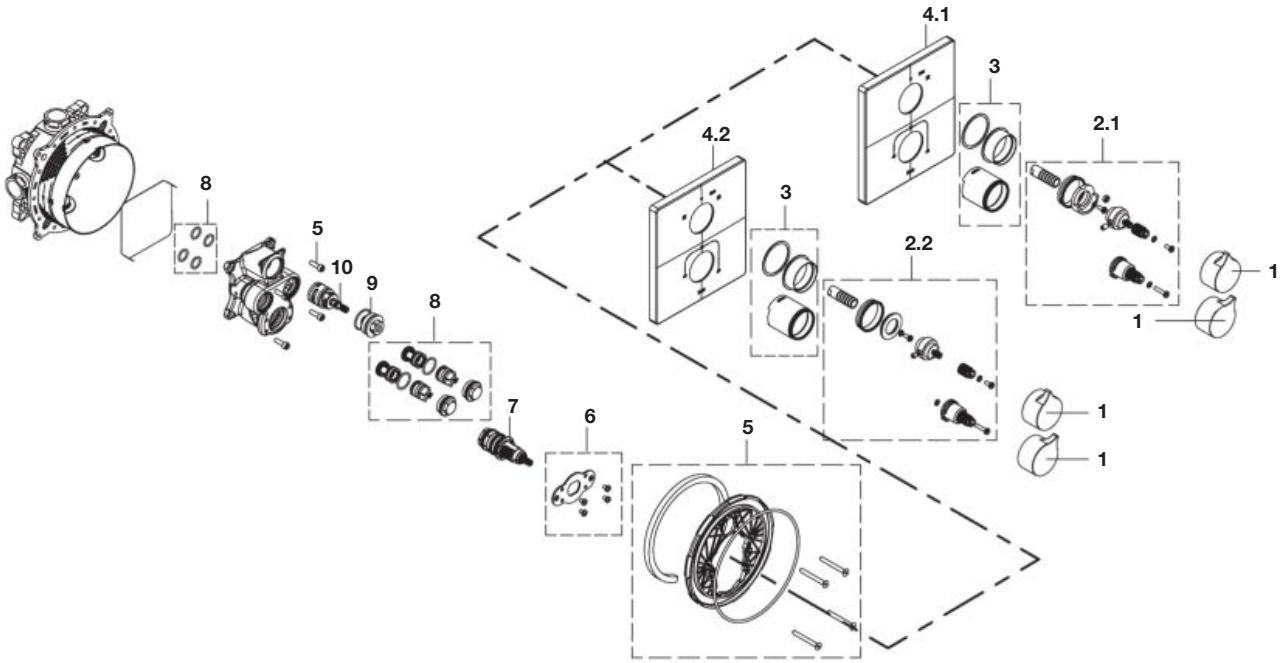

Sustituir los (...) de la referencia por el código del acabado Everlux elegido:
In the product reference replace (..) with the code for the selected finish code:

00 Cromado / Chromed
CN Negro titanio / Titanium black
RG Oro rosado / Rose gold
NM Negro titanio cepillado / Brushed titanium black

			€
1	**AG0186200R**		22,70
	AG01862CNR		41,10
	AG01862RGR		42,10
	AG01862NMR		49,90
2.1	**AG0186900R**		68,20
2.2	**AG0186800R**	+	40,50
3	**AG0187100R**		56,80
	AG01871CNR		105,00
	AG01871RGR		79,20
	AG01871NMR		83,50
4.1	**AG0186300R**		97,10
	AG01863CNR		101,00
	AG01863RGR		94,20
	AG01863NMR		121,00

			€
4.2	**AG0186000R**	+	95,80
	AG01860CNR		98,30
	AG01860RGR		94,20
	AG01860NMR		121,00
5	**AG0120900R**		23,50
6	**AG0132003R**		20,80
7	**A525015803**		78,50
8	**AG0132107R**		41,70
9	**AG0030603R**		48,60
10	**AG0131903R**		22,60

Pals

Grifería para lavabo / Basin faucet

A5A306D
A5A326D

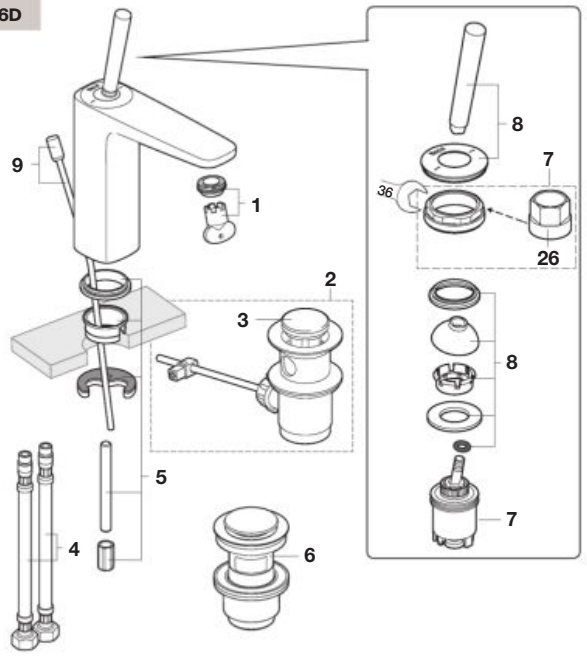

Grifería para lavabo / Basin faucet

A5A376D

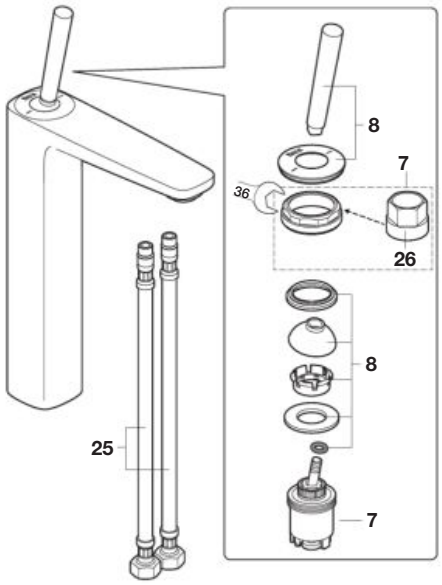

Grifería para bidé / Bidet faucet

A5A606D

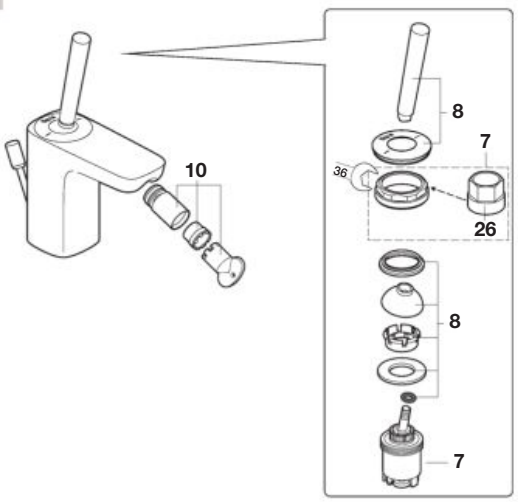

		€
1	**AG0134507R**	7,95
2	**AG0075300R**	28,80
3	**AG0096200R**	7,48
4	**A525020309**	15,00
5	**A525004403**	7,92
6	**A505400900**	-
7	**AG0216200R**	149,00

		€
8	**AG0216300R**	47,60
9	**AG0002100R**	8,45
10	**A525003507**	38,20
11	**AG0116800R**	9,26
12	**AG0103908R**	17,30
13	**AG0126203R**	16,10
14	**A525005200**	15,30

		€
15	**AG0116700R**	4,36
16	**AG0116500R**	13,90
17	**A525087607**	7,92
18	**AG0216500R**	11,70
19	**AG0216600R**	2,89
20	**AG0126303R**	12,30
21	**A525087203**	9,69

		€
22	**AG0110607R**	9,98
23	**A525024200**	9,74
24	**A525005507**	7,44
25	**A525020409**	18,60
26	**AG0136200R**	22,60

Pals

Grifería para ducha / Shower faucet

A5A216D

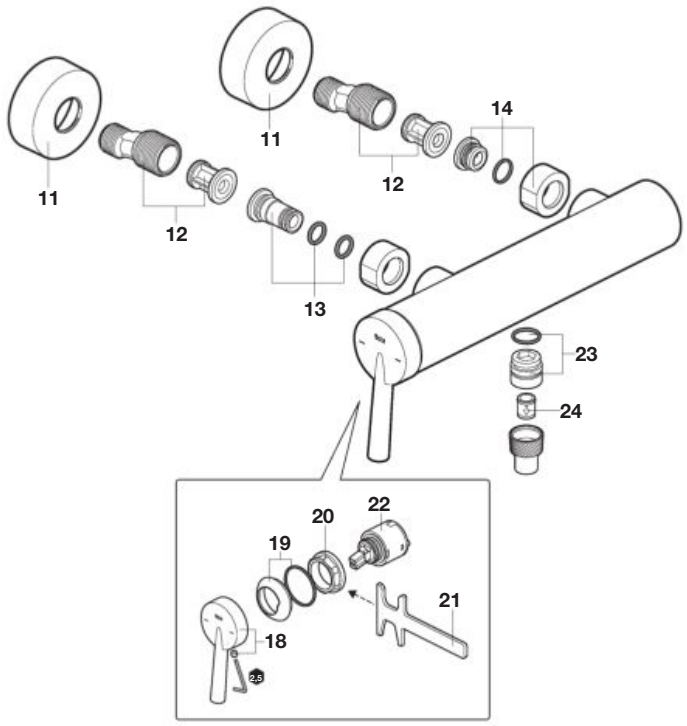

Grifería para baño y ducha / Bath and shower faucet

A5A026D

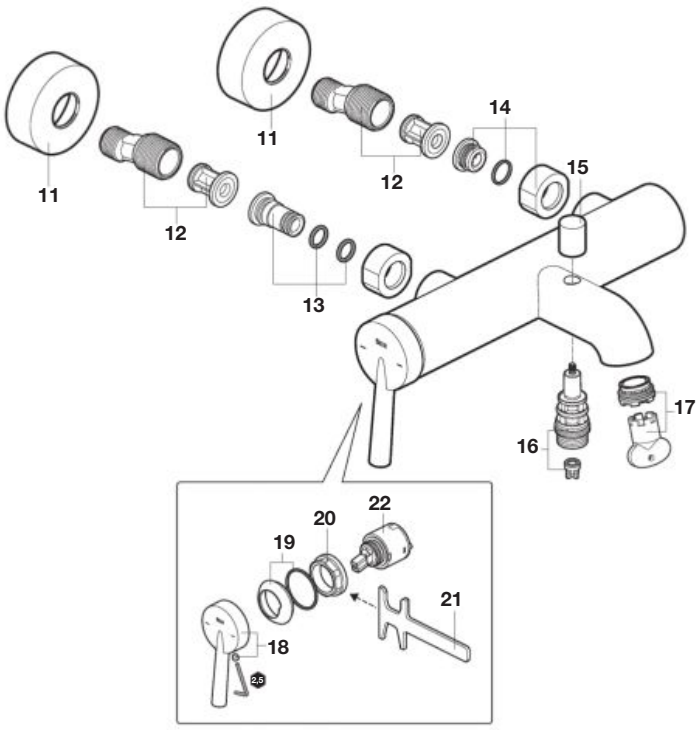

		€
1	**AG0134507R**	7,95
2	**AG0075300R**	28,80
3	**AG0096200R**	7,48
4	**A525020309**	15,00
5	**A525004403**	7,92
6	**A505400900**	-
7	**AG0216200R**	149,00

		€
8	**AG0216300R**	47,60
9	**AG0002100R**	8,45
10	**A525003507**	38,20
11	**AG0116800R**	9,26
12	**AG0103908R**	17,30
13	**AG0126203R**	16,10
14	**A525005200**	15,30

		€
15	**AG0116700R**	4,36
16	**AG0116500R**	13,90
17	**A525087607**	7,92
18	**AG0216500R**	11,70
19	**AG0216600R**	2,89
20	**AG0126303R**	12,30
21	**A525087203**	9,69

		€
22	**AG0110607R**	9,98
23	**A525024200**	9,74
24	**A525005507**	7,44
25	**A525020409**	18,60
26	**AG0136200R**	22,60

Pals

Grifería para baño y ducha / Bath and shower faucet

A5A986D

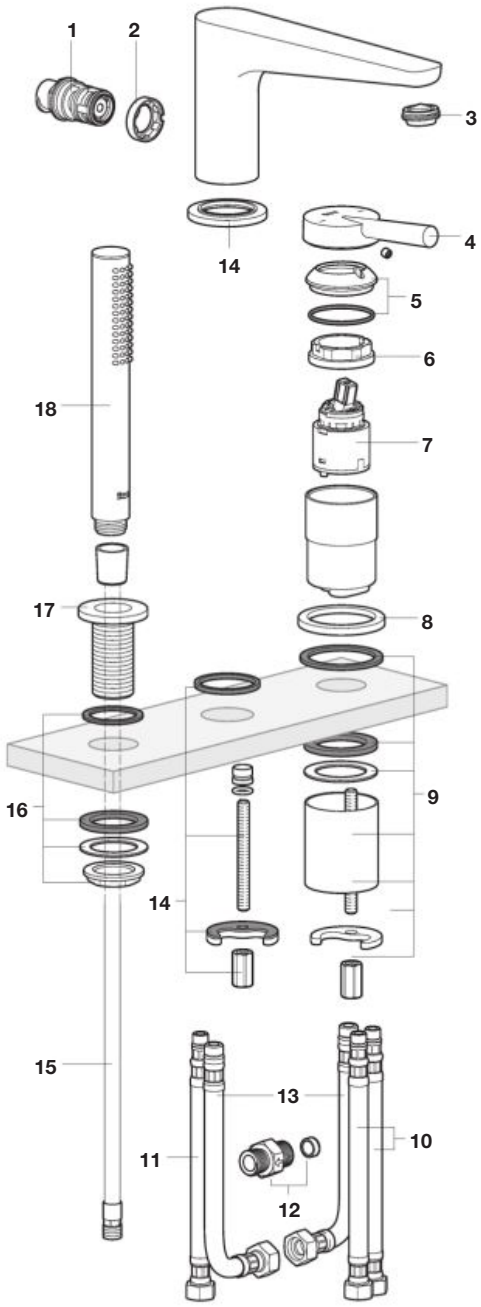

		€
1	**A525023600**	35,50
2	**A525024200**	9,74
3	**AG0029400R**	2,74
4	**AG0216500R**	11,70

		€
5	**AG0216600R**	2,89
6	**AG0126303R**	12,30
7	**AG0053707R**	39,20
8	**AG0222600R**	10,10

		€
9	**AG0222700R**	18,80
10	**A525020309**	15,00
11	**A525027609**	24,20
12	**AG0007503R**	38,20

		€
13	**AG0189900R**	5,44
14	**AG0222800R**	19,70
15	**AB0030900R**	37,00
16	**AG0048303R**	25,20

		€
17	**AG0154400R**	14,90
18	**A5B3750CM0**	-

Pals

Grifería empotrable para baño y ducha / Wall-mounted bath and shower faucet

A5A0B6DC00

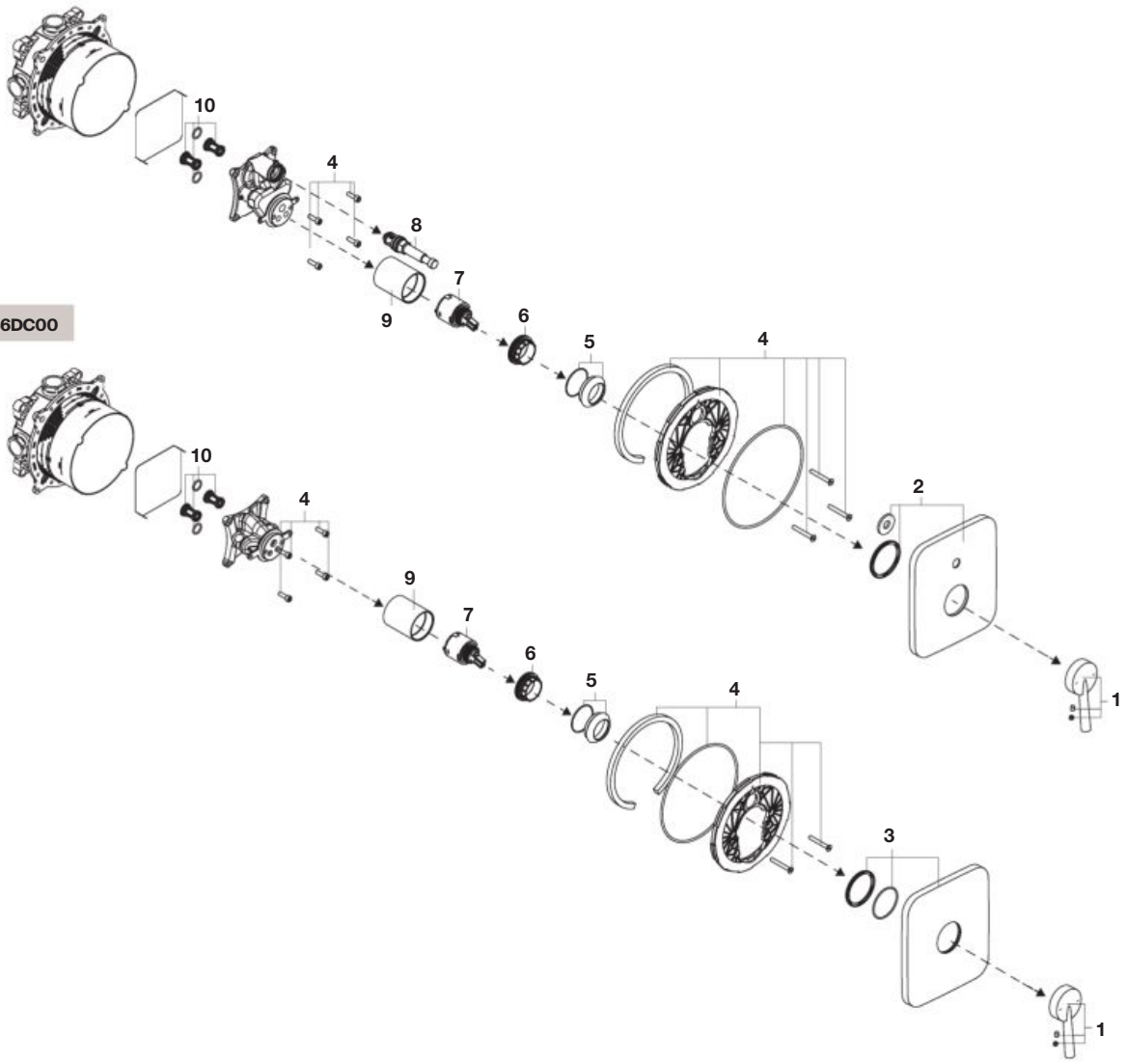

A5A2B6DC00

		€			€			€			€			€
1	**AG0216500R**	11,70	3	**AG0233100R**	26,80	5	**AG0216600R**	2,89	7	**AG0110607R**	9,98	9	**AG0121700R**	119,00
2	**AG0233000R**	27,10	4	**AG0120900R**	23,50	6	**AG0228800R**	22,30	8	**A525006500**	23,30	10	**AG0121000R**	21,70

L90 C

Grifería para lavabo y bidé / Basin and bidet faucet

A5A3A01C00
A5A3B01C00
A5A3C01C00

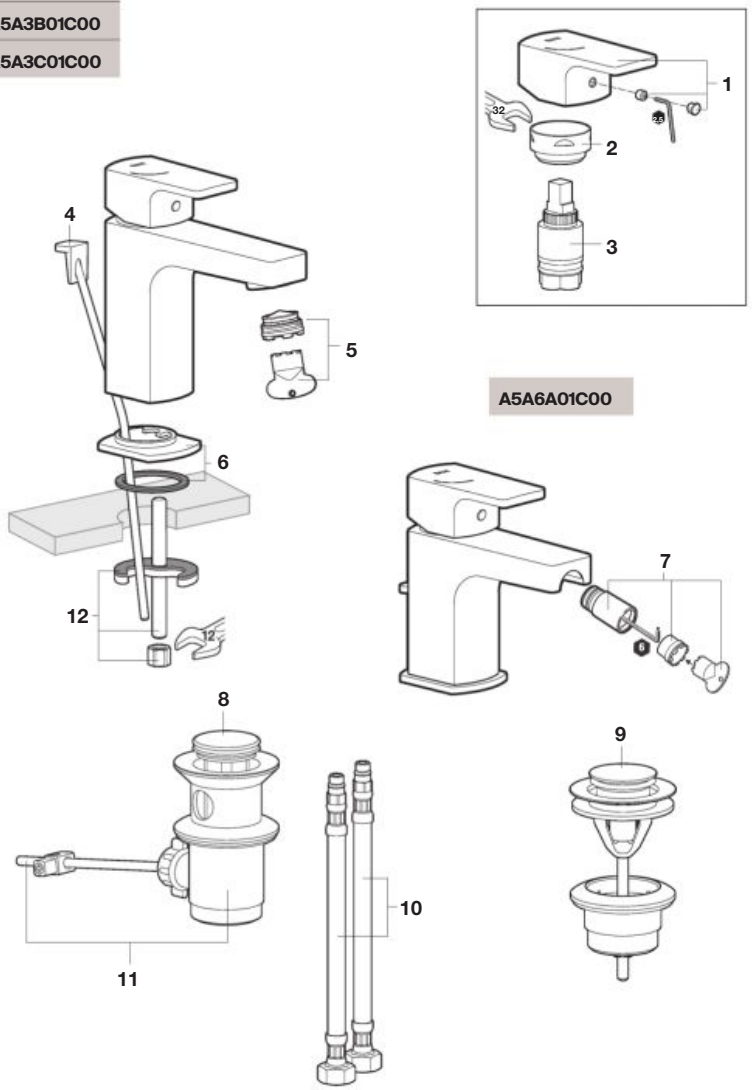

A5A6A01C00

		€
1	**AG0118000R**	18,60
2	**AG0118100R**	78,80
3	**AG0118207R**	14,40
4	**A525020600**	8,88

		€
5	**AG0100007R**	19,50
6	**AG0118400R**	8,91
7	**A525003507**	38,20
8	**AG0096200R**	7,48

		€
9	**A505400900**	-
10	**AG0118308R**	12,50
11	**AG0075300R**	28,80
12	**A525004403**	7,92

L90

Grifería para lavabo y bidé / Basin and bidet faucet

A5A3E01
A5A3F01
A5A3001

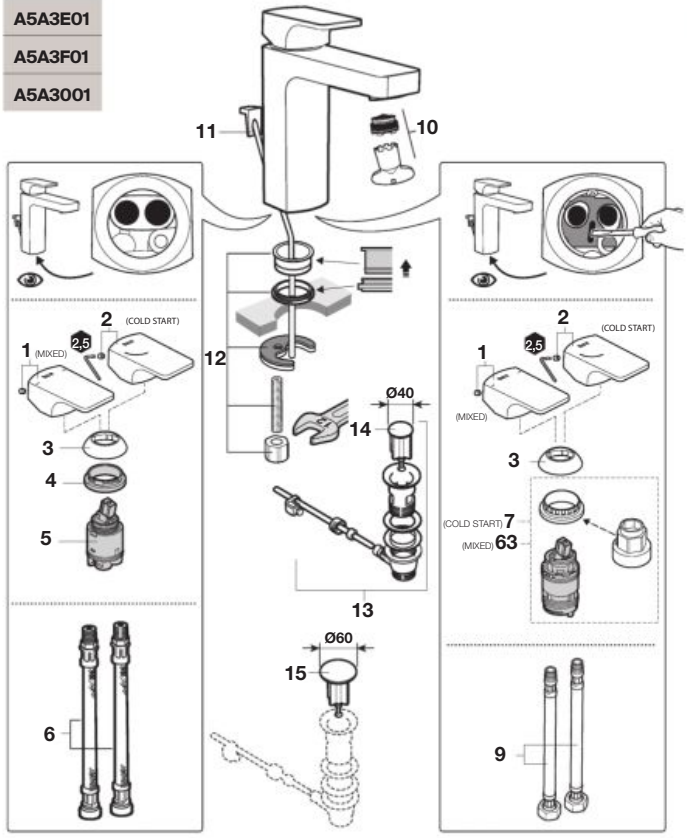

A5A6001

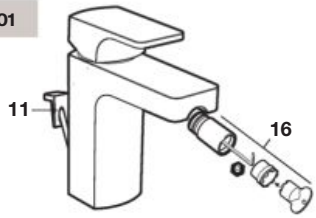

Grifería para lavabo / Basin faucet

A5A4001

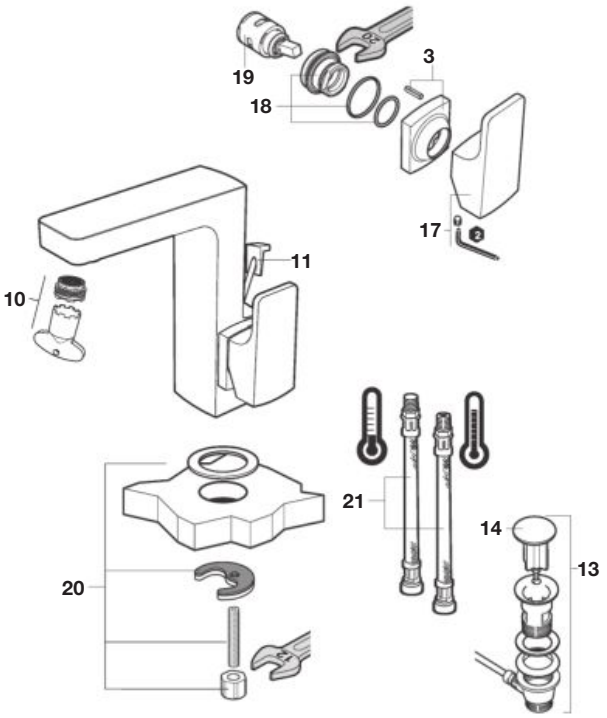

Griferías para bidé / Bidet faucet

A5A6301

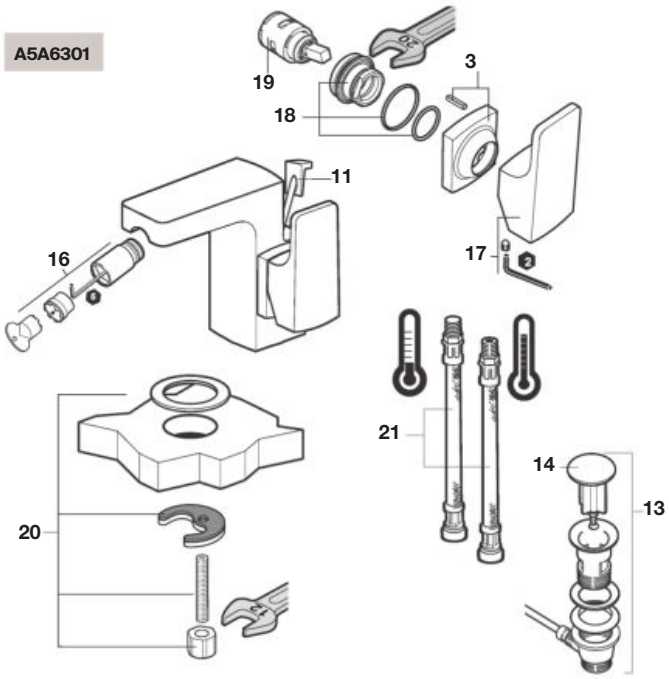

		€
1	**AG0041800R**	42,00
2	**AG0192400R**	25,30
3	**AG0032100R**	27,90
4	**AG0041903R**	25,60
5	**AG0141207R**	19,20

		€
6	**A525020309**	15,00
7	**AG0200700R**	19,40
9	**AG0096409R**	13,90
10	**AG0129807R**	9,55
11	**A525020600**	8,88

		€
12	**A525004403**	7,92
13	**AG0075400R**	33,80
14	**AG0096200R**	7,48
15	**AG0077100R**	40,60
16	**A525003507**	38,20

		€
17	**AG0042000R**	47,30
18	**AG0042103R**	18,80
19	**AG0034103R**	50,00
20	**A525006903**	8,56
21	**AG0137300R**	19,60

		€
27	**AG0173300R**	15,50
63	**AG0200600R**	17,40

L90

Griferías para lavabo / Basin faucet

A5A3801

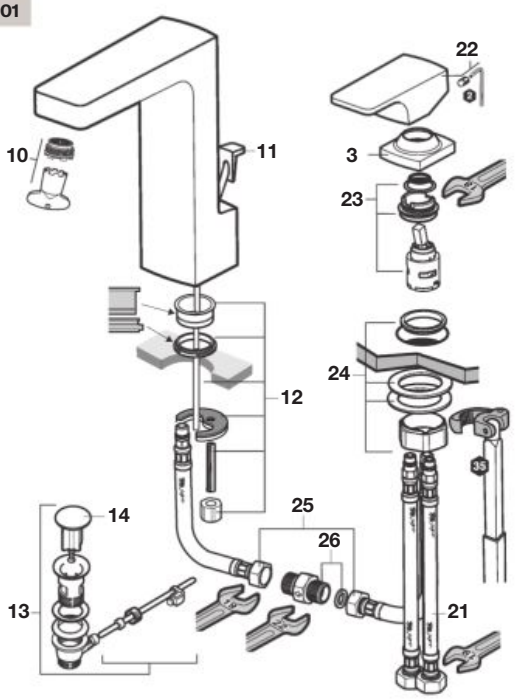

Griferías para lavabo / Basin faucet

A5A3G01
A5A3401

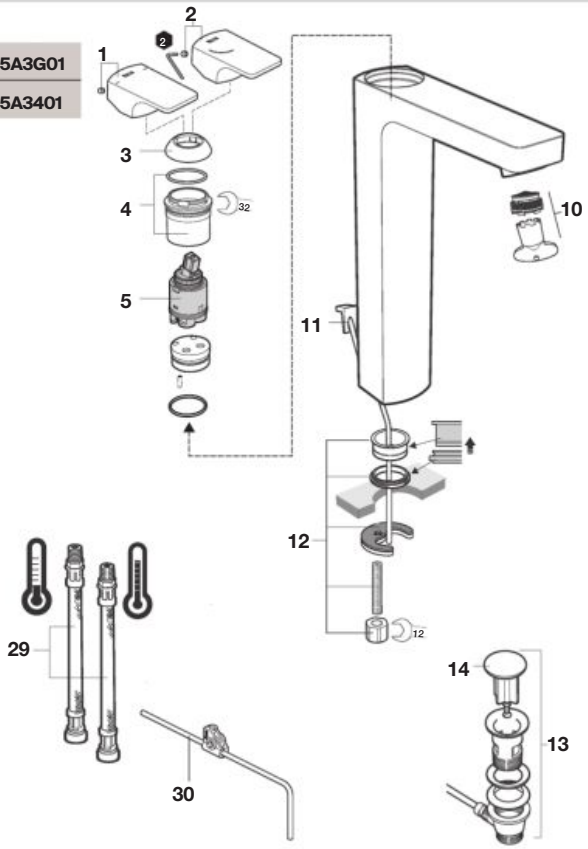

Grifería para lavabo / Basin faucet

A5A3L20 + **A5252206**

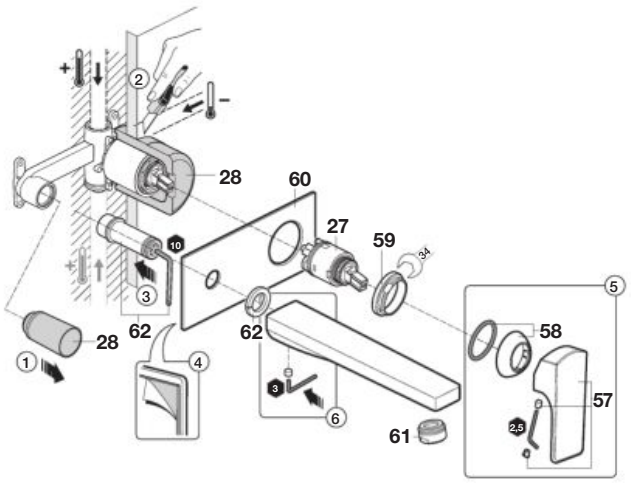

Grifería para baño y ducha / Bath and shower faucet

A5A0D01
A5A2D01

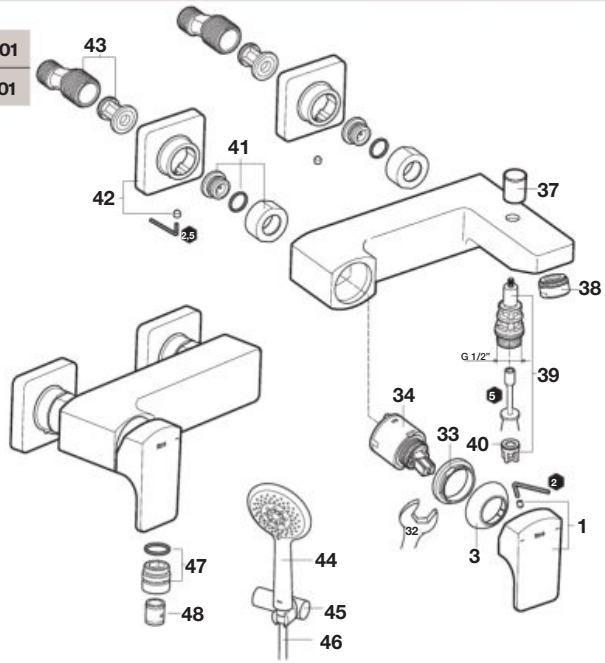

		€
1	AG0041800R	42,00
2	AG0192400R	25,30
3	AG0032100R	27,90
4	AG0041903R	25,60
5	AG0141207R	19,20
10	AG0129807R	9,55
11	A525020600	8,88
12	A525004403	7,92

		€
13	AG0075400R	33,80
14	AG0096200R	7,48
21	AG0137300R	19,60
22	AG0042200R	47,30
23	AG0010203R	103,00
24	AG0007403R	17,00
25	A525020509	13,20
26	AG0007503R	38,20

		€
27	AG0173300R	15,50
28	AG0001907R	11,00
29	AG0096509R	16,40
30	AG0033300R	30,00
33	A525027803	32,40
34	AG0053707R	39,20
37	AG0116700R	4,36
38	A525005800	7,44

		€
39	AG0116500R	13,90
40	AG0134907R	6,77
41	A525005200	15,30
42	AG0145500R	6,17
43	AG0103908R	17,30
44	A5B9108C00	N.D.
45	A525021600	32,70
46	A525009800	27,10

		€
47	A525024200	9,74
48	A525005507	7,44
57	AG0016200R	27,70
58	AG0143200R	4,09
59	AG0142100R	3,20
60	AG0137200R	23,30
61	AG0046600R	11,40
62	AG0155000R	9,41

L90

Grifería para baño y ducha / Bath and shower faucet

A5A0901

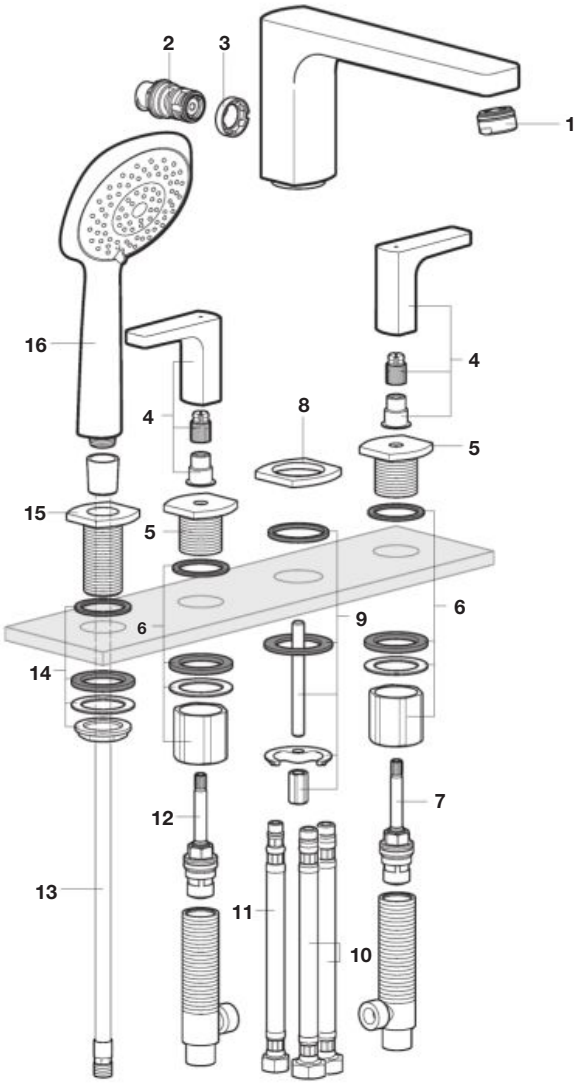

		€
1	**A525003600**	4,85
2	**A525023600**	35,50
3	**A525024200**	9,74
4	**AG0044200R**	61,80
5	**AG0048600R**	25,80
6	**AG0048703R**	37,60
7	**AG0049003R**	56,40
8	**AG0048000R**	37,90

		€
9	**A525006903**	8,56
10	**AG0048509R**	17,40
11	**AG0009709R**	9,39
12	**A525021403**	48,00
13	**AB0030900R**	37,00
14	**AG0048303R**	25,20
15	**AG0048100R**	29,90
16	**A5B9105BC0**	-

Grifería para baño y ducha / Bath and shower faucet

A5A9801

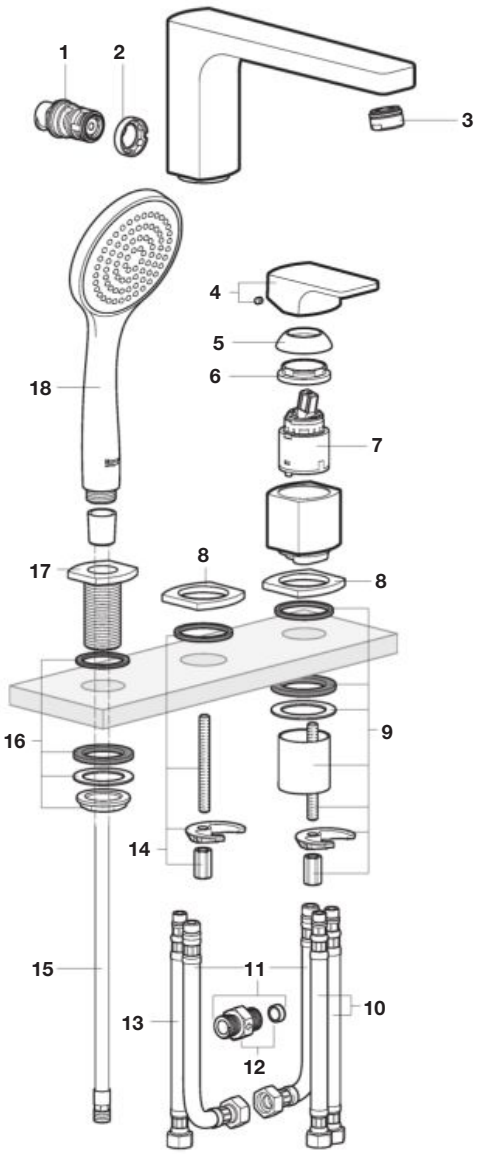

		€
1	**A525023600**	35,50
2	**A525024200**	9,74
3	**AG0029400R**	2,74
4	**AG0041800R**	42,00
5	**AG0032100R**	27,90
6	**A525027803**	32,40
7	**AG0077807R**	42,10
8	**AG0048000R**	37,90
9	**AG0048403R**	15,60

		€
10	**A525020309**	15,00
11	**AG0010603R**	47,00
12	**AG0007503R**	38,20
13	**AG0009709R**	9,39
14	**A525006903**	8,56
15	**AB0030900R**	37,00
16	**AG0048303R**	25,20
17	**AG0048100R**	29,90
18	**AG0045000R**	57,40

L90

Grifería para baño y ducha / Bath and shower faucet

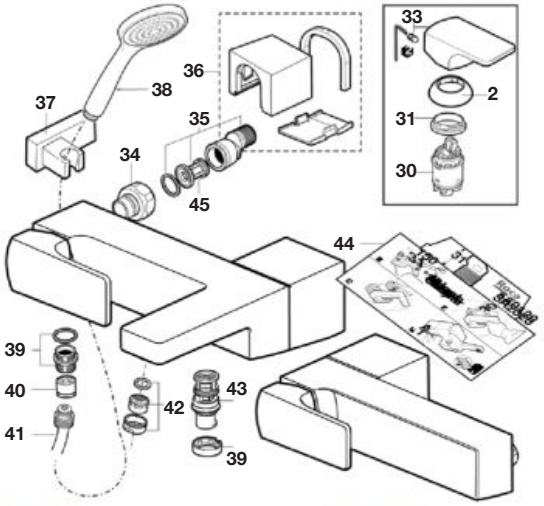

A5A0101

A5A2001

Grifería empotrable para ducha
Wall-mounted shower faucet

A5A2201

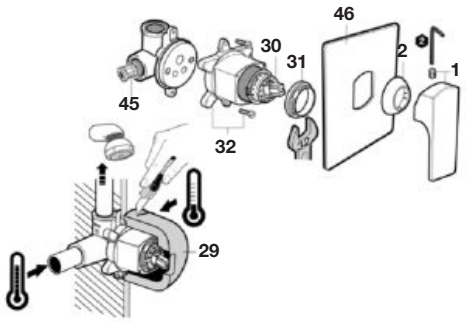

Grifería empotrable para lavabo /
Wall-mounted basin faucet

A5A4701

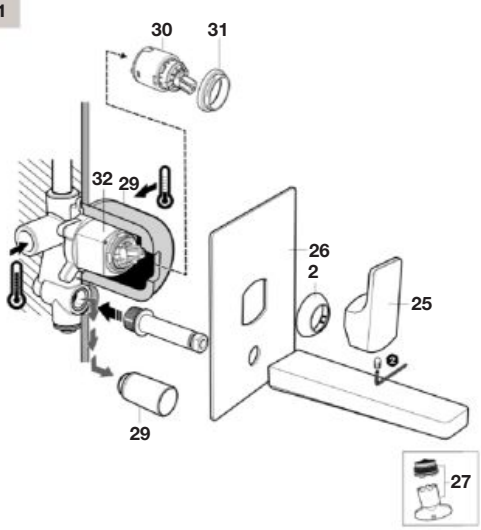

		€
1	**AG0041800R**	42,00
2	**AG0032100R**	27,90
3	**AG0096307R**	6,45
4	**AG0141207R**	19,20
5	**AG0100007R**	19,50
6	**A525020600**	8,88
7	**AG0144800R**	2,50
8	**A525020309**	15,00
9	**AG0096200R**	7,48
10	**AG0075400R**	33,80

		€
11	**A525003507**	38,20
12	**AG0042000R**	47,30
13	**AG0042103R**	18,80
14	**AG0034103R**	50,00
15	**A525006903**	8,56
16	**AG0009209R**	17,70
17	**AG0042200R**	47,30
19	**AG0007403R**	17,00
20	**A525020509**	13,20
21	**A525005407**	7,44

		€
22	**AG0007503R**	38,20
23	**A525020409**	18,60
24	**AG0033300R**	30,00
25	**AG0042300R**	42,00
26	**AG0042400R**	156,00
27	**AG0100007R**	19,50
29	**A525029207**	13,70
30	**AG0053707R**	39,20
31	**A525027803**	32,40
32	**AG0042700R**	125,00

		€
33	**AG0042800R**	42,00
34	**AG0021700R**	40,90
35	**AG0103908R**	17,30
36	**AG0042900R**	40,30
37	**A525021600**	32,70
38	**AG0045000R**	57,40
39	**A525024200**	9,74
40	**A525005507**	7,44
41	**A525009800**	27,10
42	**A525003600**	4,85

		€
43	**A525023600**	35,50
44	**AG0043007R**	N.D.
45	**A525024803**	38,30
46	**AG0043200R**	85,50
47	**AG0043300R**	114,00
48	**A525022800**	85,90
49	**AG0055800R**	14,40

L90

Grifería empotrable para baño y ducha / Wall-mounted bath and shower faucet

A5A0601

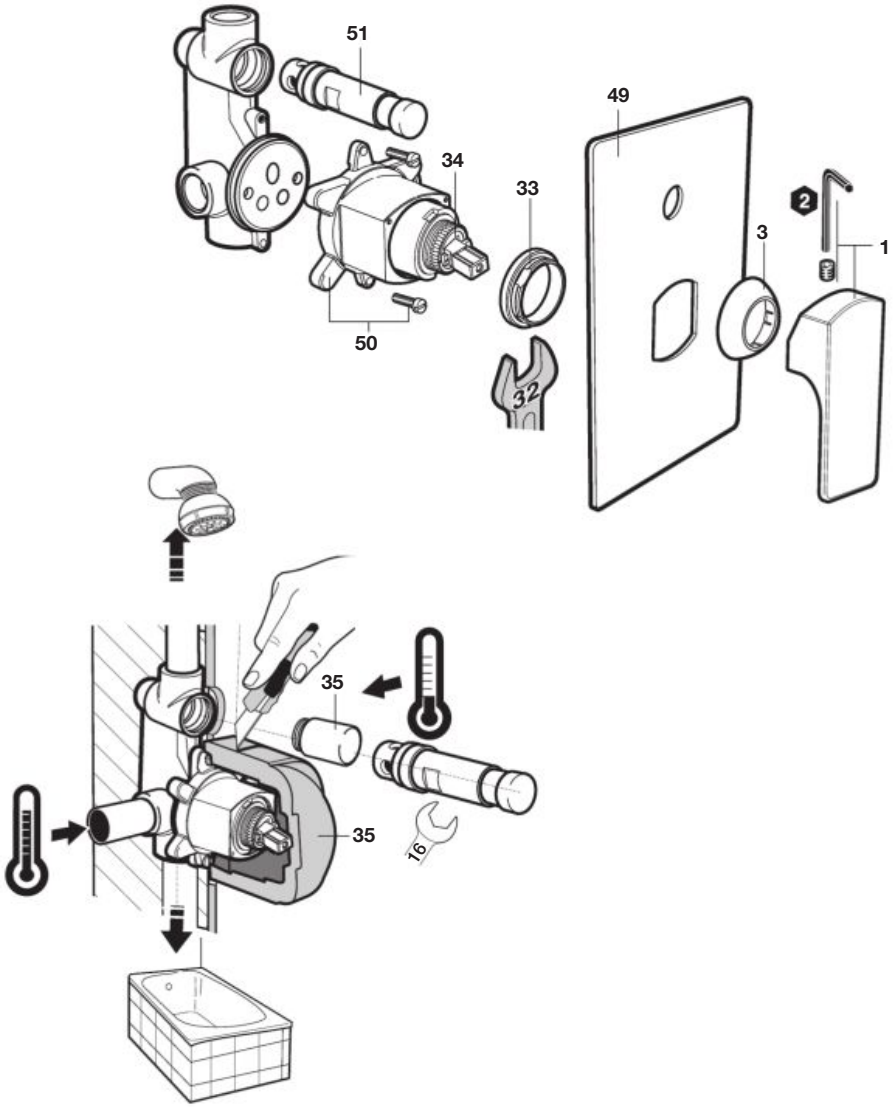

		€
1	**AG0041800R**	42,00
3	**AG0032100R**	27,90
33	**A525027803**	32,40
34	**AG0053707R**	39,20
35	**A525029207**	13,70
49	**AG0043300R**	114,00
50	**AG0042700R**	125,00
51	**A525022800**	85,90

L90

Grifería termostática para baño y ducha / Bath & shower thermostatic faucet

A5A1101

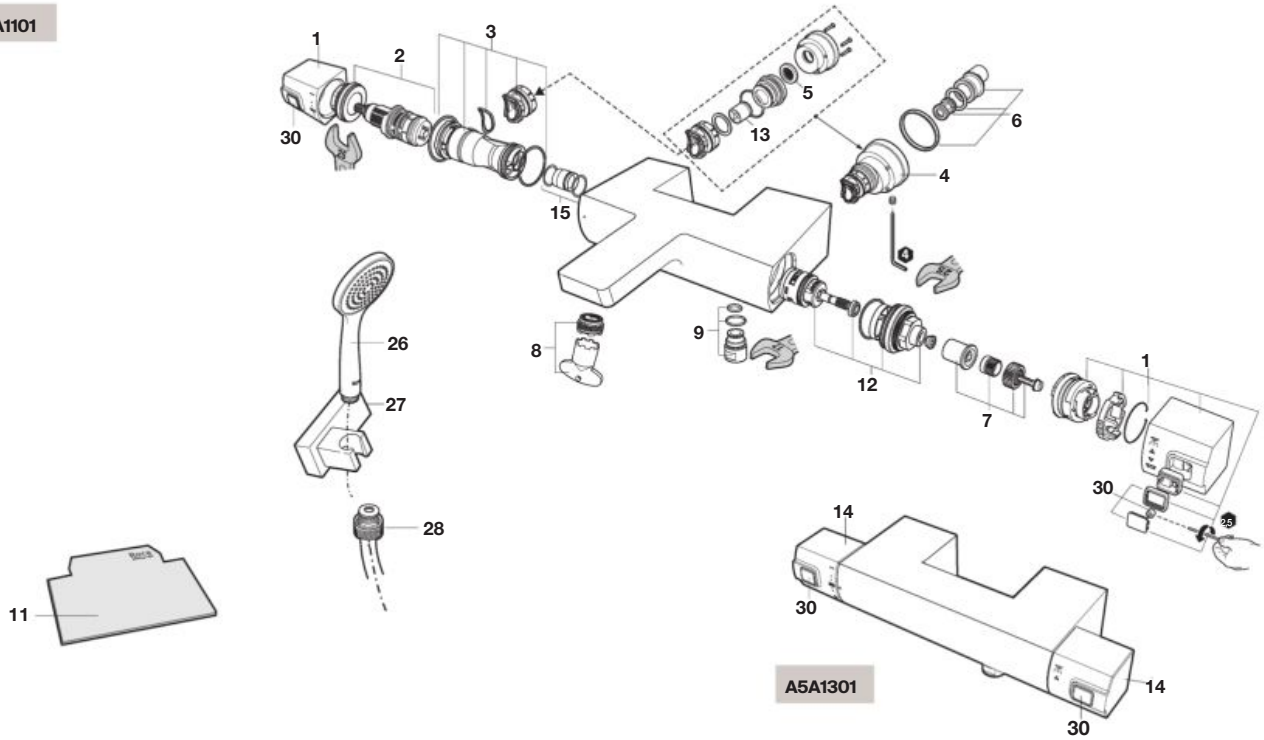

Grifería termostática empotrable para baño y ducha
Wall-mounted bath or shower thermostatic faucet

A5A2801

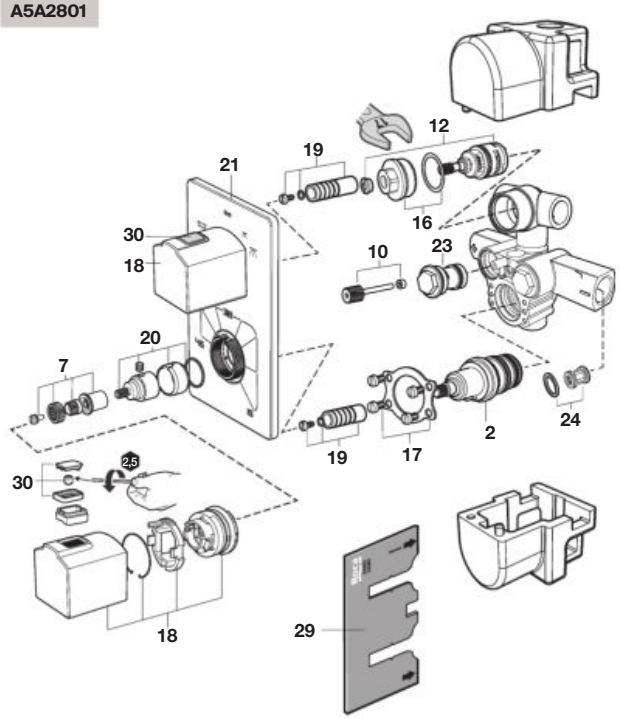

Grifería termostática empotrable para baño y ducha
Wall-mounted bath or shower thermostatic faucet

A5A2901

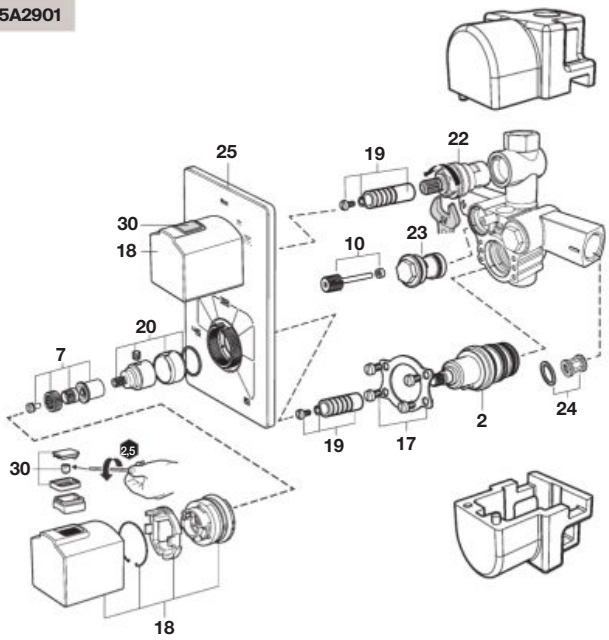

		€
1	**AG0030000R**	173,00
2	**A525015803**	78,50
3	**AG0172900R**	6,20
4	**AG0030103R**	229,00
5	**A525016207**	2,56
6	**AG0009603R**	77,00

		€
7	**AG0030303R**	66,50
8	**AG0085907R**	8,11
9	**A525016609**	5,76
10	**A525017803**	2,61
11	**AG0025807R**	4,98
12	**AG0151300R**	28,80

		€
13	**AG0026307R**	5,83
14	**AG0030200R**	274,00
15	**A525017203**	2,74
16	**AG0030603R**	48,60
17	**AG0030503R**	12,20
18	**AG0132500R**	92,70

		€
19	**AG0030403R**	46,10
20	**A525017503**	6,95
21	**AG0032500R**	26,10
22	**AG0020903R**	51,50
23	**A525018003**	87,70
24	**A525024803**	38,30

		€
25	**AG0032600R**	26,10
26	**AG0045000R**	57,40
27	**A525021600**	32,70
28	**A525009800**	27,10
29	**AG0030707R**	62,40
30	**AG0084200R**	23,50

L90

Columna monomando para baño-ducha / Bath and shower single-lever column

A5A2701C00

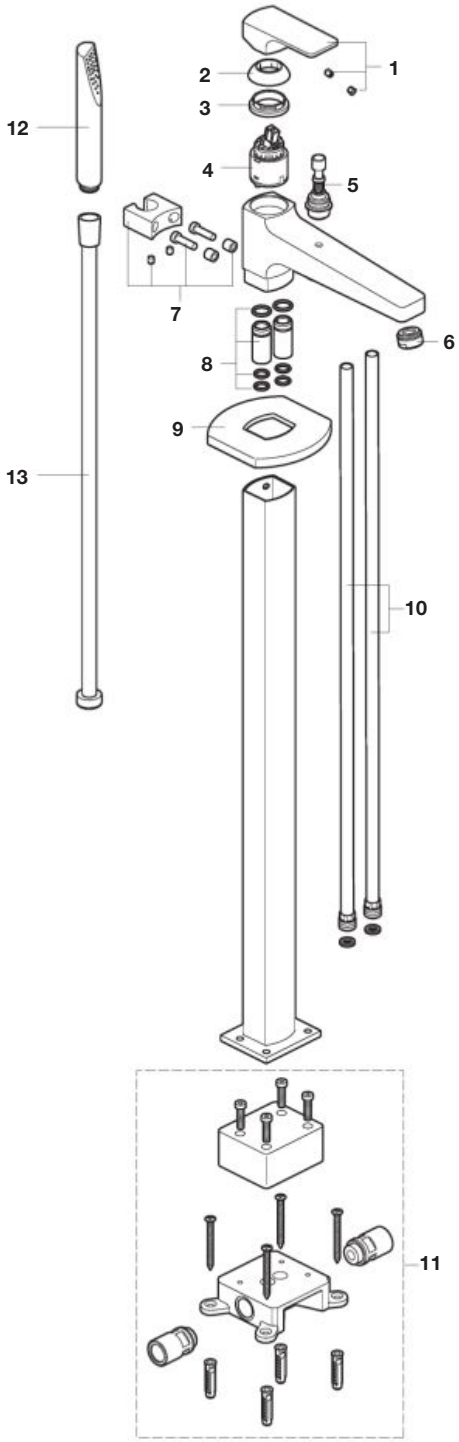

		€
1	**AG0016200R**	27,70
2	**AG0032100R**	27,90
3	**A525027803**	32,40
4	**AG0077807R**	42,10
5	**AG0131800R**	45,80
6	**A525003600**	4,85
7	**AG0128000R**	48,80

		€
8	**AG0128103R**	44,70
9	**AG0128200R**	35,20
10	**AG0128400R**	114,00
11	**AG0128503R**	289,00
12	**A5B9047C00**	-
13	**A525009800**	27,10

Naia / Naia Colors

Grifería para lavabo / Basin faucet

A5A3096
A5A3296
A5A3A96

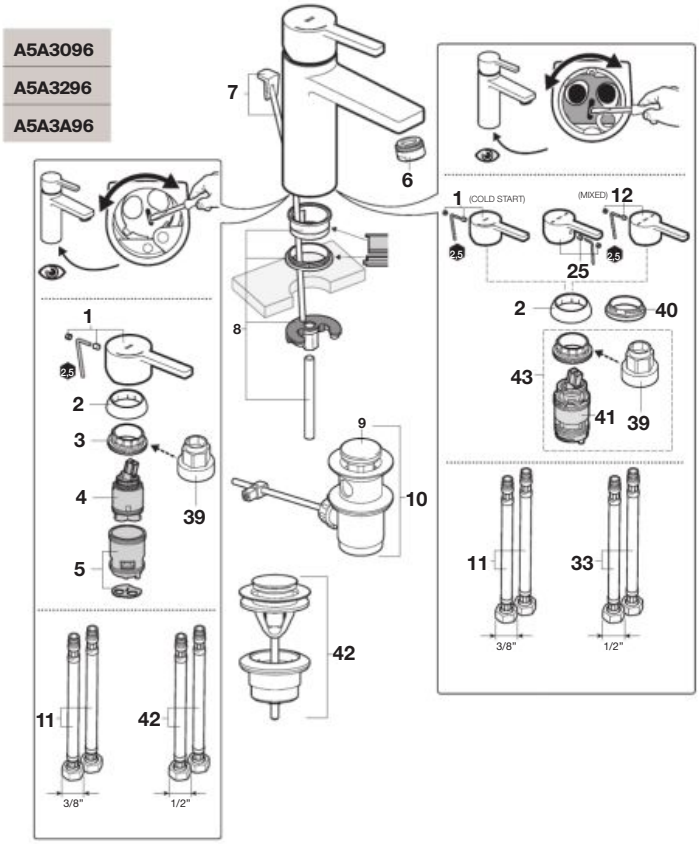

Grifería para lavabo / Basin faucet

A5A3996

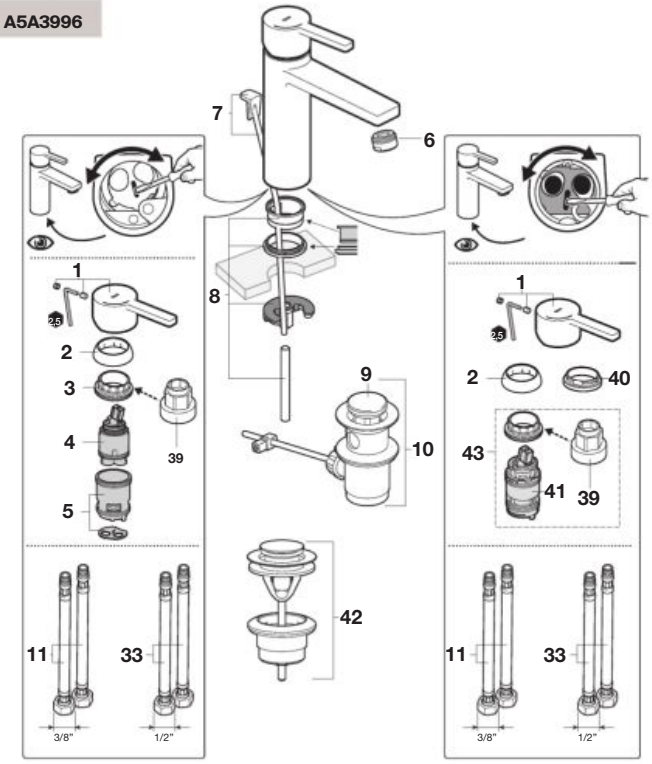

Los ultimos dígitos de la referencia de recambio indican el código del acabado:
Last digits of spare part reference indicate finish code:

00 Cromado / Chromed
CN Negro titanio / Titanium black
RG Oro rosado / Rose gold
NM Negro titanio cepillado / Brushed titanium black

		€
1	**AG0136500R**	9,53
	AG01365CNR	47,00
	AG01365RGR	48,50
	AG01365NMR	48,50
2	**AG0085300R**	18,00
	AG00853CNR	10,10
	AG00853RGR	7,64
	AG00853NMR	13,70
3	**A525023507**	4,23
4	**AG0173300R**	15,50
5	**AG0096307R**	6,45
6	**AG0046600R**	11,40
	AG00466CNR	11,10
	AG00466RGR	9,27
	AG00466NMR	15,50
7	**A525020600**	8,88
8	**AG0136603R**	9,15
9	**AG0096200R**	7,48
10	**AG0075300R**	28,80
11	**AG0096409R**	13,90
12	**AG0126900R**	19,40
	AG01269CNR	51,80
	AG01269RGR	39,70
	AG01269NMR	48,50

			€
13	**A525003507**	Cromado Chromed	38,20
	AG01966CNR		32,30
	AG01966RGR		28,80
	AG01966NMR		43,80
14	**AG0136800R**		51,70
	AG01368CNR		102,00
	AG01368RGR		86,50
	AG01368NMR		93,20
15	**AG0110607R**		9,98
16	**AG0137200R**		23,30
	AG01372CNR		90,50
	AG01372RGR		91,40
	AG01372NMR		98,90
17	**A525003600**	Cromado Chromed	4,85
	AG02128CNR		8,26
	AG02128RGR		6,59
	AG02128NMR		12,70
18	**A525024200**	Cromado Chromed	9,74
	AG02130CNR		15,00
	AG02130RGR		13,50
	AG02130NMR		18,80

			€
19	**A525023600**	Cromado Chromed	35,50
	AG02129CNR		32,30
	AG02129RGR		29,10
	AG02129NMR		33,20
20	**AG0213100R**		8,70
	AG02131CNR		16,20
	AG02131RGR		15,00
	AG02131NMR		17,70
21	**AG0001907R**		11,00
22	**AG0103908R**		17,30
23	**AG0142100R**		3,20
24	**AG0116800R**		9,26
	AG01168CNR		69,10
	AG01168RGR		53,50
	AG01168NMR		68,30
25	**AG0137000R**		11,30
	AG01370CNR		49,20
	AG01370RGR		51,70
	AG01370NMR		57,90
26	**AG0036800R**		3,71
	AG00368CNR		7,38
	AG00368RGR		6,12
	AG00368NMR		9,58
27	**A525005507**		7,44

		€
28	**AG0003700R**	13,70
29	**A525009800**	27,10
30	**A5B8113C00**	-
31	**AG0117207R**	2,58
32	**AG0136700R**	29,70
33	**AG0126009R**	17,00
34	**AG0136903R**	9,95
35	**AG0033300R**	30,00
36	**A525004600**	8,20
37	**AG0117300R**	4,33
38	**AG0155000R**	9,41
39	**A525005407**	7,44
40	**AG0163900R**	35,80
41	**AG0159300R**	12,50
42	**A505400900**	-
	A5054009CN	N.D.
	A5054009RG	-
	A5054009NM	N.D.
43	**AG0200700R**	19,40
44	**AG0096509R**	16,40
45	**AG0125909R**	18,30

Naia / Naia Colors

Grifería para bidé / Bidet faucet

A5A6096
A5A6A96

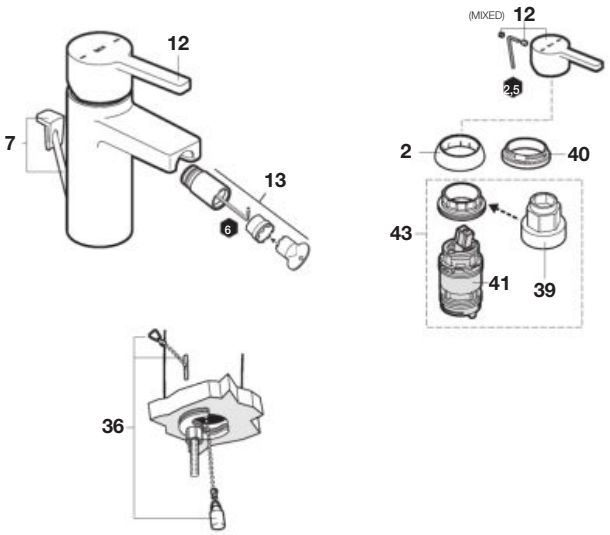

Los ultimos dígitos de la referencia de recambio indican el código del acabado:
Last digits of spare part reference indicate finish code:
00 Cromado / Chromed
CN Negro titanio / Titanium black
RG Oro rosado / Rose gold
NM Negro titanio cepillado / Brushed titanium black

			€
1	**AG0136500R**		9,53
	AG01365CNR		47,00
	AG01365RGR		48,50
	AG01365NMR		48,50
2	**AG0085300R**		18,00
	AG00853CNR		10,10
	AG00853RGR		7,64
	AG00853NMR		13,70
3	**A525023507**		4,23
4	**AG0173300R**		15,50
5	**AG0096307R**		6,45
6	**AG0046600R**		11,40
	AG00466CNR		11,10
	AG00466RGR		9,27
	AG00466NMR		15,50
7	**A525020600**		8,88
8	**AG0136603R**		9,15
9	**AG0096200R**		7,48
10	**AG0075300R**		28,80
11	**AG0096409R**		13,90
12	**AG0126900R**		19,40
	AG01269CNR		51,80
	AG01269RGR		39,70
	AG01269NMR		48,50

			€
13	**A525003507**	Cromado Chromed	38,20
	AG01966CNR		32,30
	AG01966RGR		28,80
	AG01966NMR		43,80
14	**AG0136800R**		51,70
	AG01368CNR		102,00
	AG01368RGR		86,50
	AG01368NMR		93,20
15	**AG0110607R**		9,98
16	**AG0137200R**		23,30
	AG01372CNR		90,50
	AG01372RGR		91,40
	AG01372NMR		98,90
17	**A525003600**	Cromado Chromed	4,85
	AG02128CNR		8,26
	AG02128RGR		6,59
	AG02128NMR		12,70
18	**A525024200**	Cromado Chromed	9,74
	AG02130CNR		15,00
	AG02130RGR		13,50
	AG02130NMR		18,80

			€
19	**A525023600**	Cromado Chromed	35,50
	AG02129CNR		32,30
	AG02129RGR		29,10
	AG02129NMR		33,20
20	**AG0213100R**		8,70
	AG02131CNR		16,20
	AG02131RGR		15,00
	AG02131NMR		17,70
21	**AG0001907R**		11,00
22	**AG0103908R**		17,30
23	**AG0142100R**		3,20
24	**AG0116800R**		9,26
	AG01168CNR		69,10
	AG01168RGR		53,50
	AG01168NMR		68,30
25	**AG0137000R**		11,30
	AG01370CNR		49,20
	AG01370RGR		51,70
	AG01370NMR		57,90
26	**AG0036800R**		3,71
	AG00368CNR		7,38
	AG00368RGR		6,12
	AG00368NMR		9,58
27	**A525005507**		7,44

			€
28	**AG0003700R**		13,70
29	**A525009800**		27,10
30	**A5B8113C00**		-
31	**AG0117207R**		2,58
32	**AG0136700R**		29,70
33	**AG0126009R**		17,00
34	**AG0136903R**		9,95
35	**AG0033300R**		30,00
36	**A525004600**		8,20
37	**AG0117300R**		4,33
38	**AG0155000R**		9,41
39	**A525005407**		7,44
40	**AG0163900R**		35,80
41	**AG0159300R**		12,50
42	**A505400900**		-
	A5054009CN		N.D.
	A5054009RG		-
	A5054009NM		N.D.
43	**AG0200700R**		19,40
44	**AG0096509R**		16,40
45	**AG0125909R**		18,30

Naia / Naia Colors

Grifería para lavabo / Basin faucet

A5A3D96
A5A3796
A5A3B96

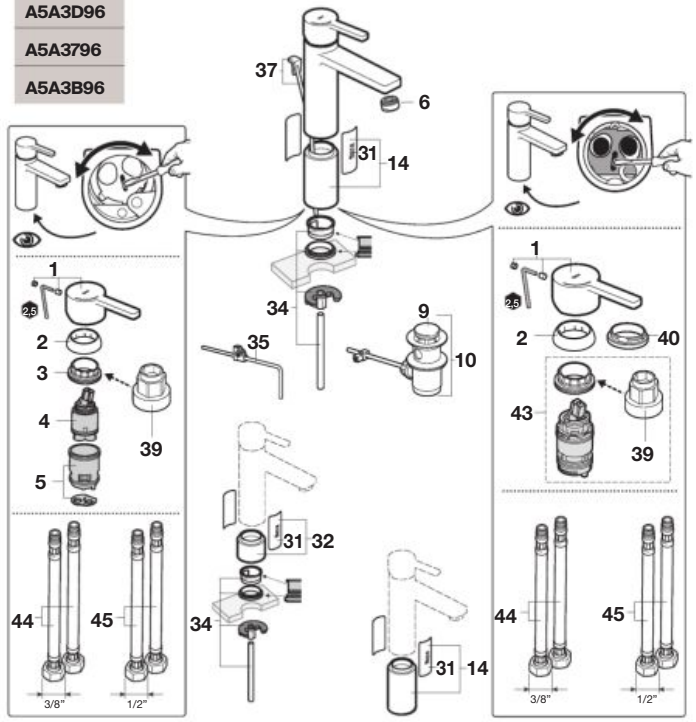

Grifería empotrable para lavabo
Wall-mounted basin faucet

A5252206 + **A5A3596**

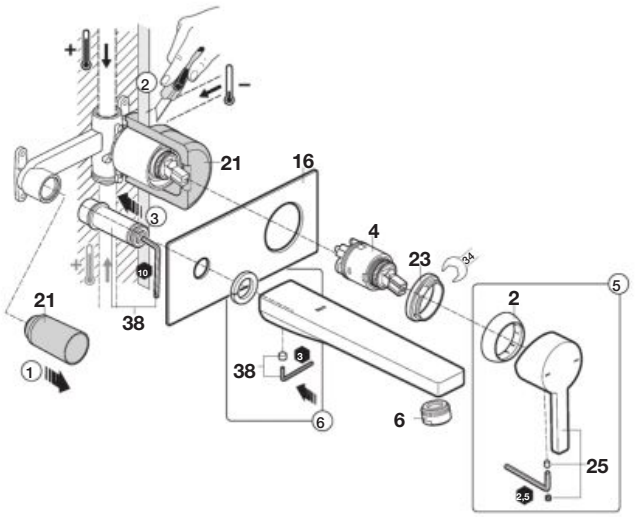

Los ultimos dígitos de la referencia de recambio indican el código del acabado:
Last digits of spare part reference indicate finish code:
00 Cromado / Chromed
CN Negro titanio / Titanium black
RG Oro rosado / Rose gold
NM Negro titanio cepillado / Brushed titanium black

		€
1	**AG0136500R**	9,53
	AG01365CNR	47,00
	AG01365RGR	48,50
	AG01365NMR	48,50
2	**AG0085300R**	18,00
	AG00853CNR	10,10
	AG00853RGR	7,64
	AG00853NMR	13,70
3	**A525023507**	4,23
4	**AG0173300R**	15,50
5	**AG0096307R**	6,45
6	**AG0046600R**	11,40
	AG00466CNR	11,10
	AG00466RGR	9,27
	AG00466NMR	15,50
7	**A525020600**	8,88
8	**AG0136603R**	9,15
9	**AG0096200R**	7,48
10	**AG0075300R**	28,80
11	**AG0096409R**	13,90
12	**AG0126900R**	19,40
	AG01269CNR	51,80
	AG01269RGR	39,70
	AG01269NMR	48,50

			€
13	**A525003507**	Cromado Chromed	38,20
	AG01966CNR		32,30
	AG01966RGR		28,80
	AG01966NMR		43,80
14	**AG0136800R**		51,70
	AG01368CNR		102,00
	AG01368RGR		86,50
	AG01368NMR		93,20
15	**AG0110607R**		9,98
16	**AG0137200R**		23,30
	AG01372CNR		90,50
	AG01372RGR		91,40
	AG01372NMR		98,90
17	**A525003600**	Cromado Chromed	4,85
	AG02128CNR		8,26
	AG02128RGR		6,59
	AG02128NMR		12,70
18	**A525024200**	Cromado Chromed	9,74
	AG02130CNR		15,00
	AG02130RGR		13,50
	AG02130NMR		18,80

			€
19	**A525023600**	Cromado Chromed	35,50
	AG02129CNR		32,30
	AG02129RGR		29,10
	AG02129NMR		33,20
20	**AG0213100R**		8,70
	AG02131CNR		16,20
	AG02131RGR		15,00
	AG02131NMR		17,70
21	**AG0001907R**		11,00
22	**AG0103908R**		17,30
23	**AG0142100R**		3,20
24	**AG0116800R**		9,26
	AG01168CNR		69,10
	AG01168RGR		53,50
	AG01168NMR		68,30
25	**AG0137000R**		11,30
	AG01370CNR		49,20
	AG01370RGR		51,70
	AG01370NMR		57,90
26	**AG0036800R**		3,71
	AG00368CNR		7,38
	AG00368RGR		6,12
	AG00368NMR		9,58
27	**A525005507**		7,44

		€
28	**AG0003700R**	13,70
29	**A525009800**	27,10
30	**A5B8113C00**	-
31	**AG0117207R**	2,58
32	**AG0136700R**	29,70
33	**AG0126009R**	17,00
34	**AG0136903R**	9,95
35	**AG0033300R**	30,00
36	**A525004600**	8,20
37	**AG0117300R**	4,33
38	**AG0155000R**	9,41
39	**A525005407**	7,44
40	**AG0163900R**	35,80
41	**AG0159300R**	12,50
42	**A505400900**	-
	A5054009CN	N.D.
	A5054009RG	-
	A5054009NM	N.D.
43	**AG0200700R**	19,40
44	**AG0096509R**	16,40
45	**AG0125909R**	18,30

Naia / Naia Colors

Grifería para baño y ducha / Bath and shower faucet

A5A0296

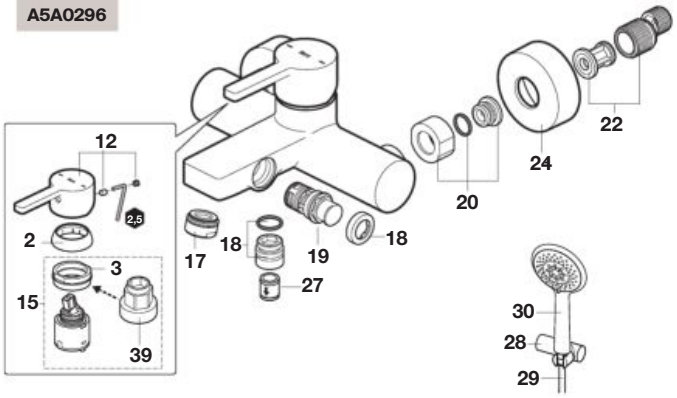

Grifería para baño y ducha / Bath and shower faucet

A5A2196

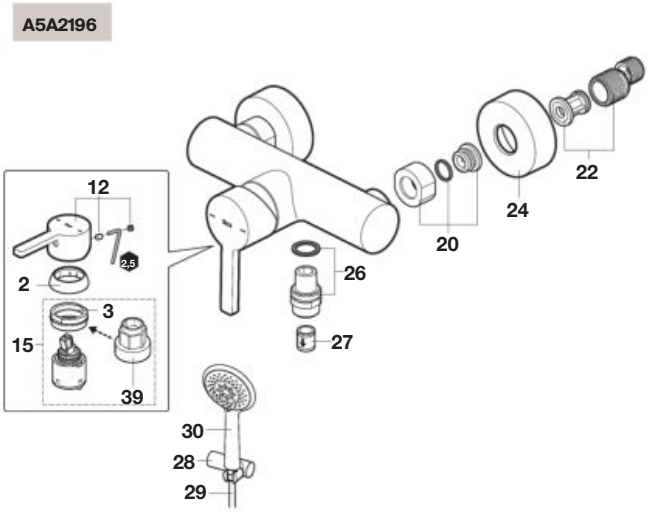

Los ultimos dígitos de la referencia de recambio indican el código del acabado:
Last digits of spare part reference indicate finish code:

00 Cromado / Chromed
CN Negro titanio / Titanium black
RG Oro rosado / Rose gold
NM Negro titanio cepillado / Brushed titanium black

		€
1	**AG0136500R**	9,53
	AG01365CNR	47,00
	AG01365RGR	48,50
	AG01365NMR	48,50
2	**AG0085300R**	18,00
	AG00853CNR	10,10
	AG00853RGR	7,64
	AG00853NMR	13,70
3	**A525023507**	4,23
4	**AG0173300R**	15,50
5	**AG0096307R**	6,45
6	**AG0046600R**	11,40
	AG00466CNR	11,10
	AG00466RGR	9,27
	AG00466NMR	15,50
7	**A525020600**	8,88
8	**AG0136603R**	9,15
9	**AG0096200R**	7,48
10	**AG0075300R**	28,80
11	**AG0096409R**	13,90
12	**AG0126900R**	19,40
	AG01269CNR	51,80
	AG01269RGR	39,70
	AG01269NMR	48,50

			€
13	**A525003507**	Cromado Chromed	38,20
	AG01966CNR		32,30
	AG01966RGR		28,80
	AG01966NMR		43,80
14	**AG0136800R**		51,70
	AG01368CNR		102,00
	AG01368RGR		86,50
	AG01368NMR		93,20
15	**AG0110607R**		9,98
16	**AG0137200R**		23,30
	AG01372CNR		90,50
	AG01372RGR		91,40
	AG01372NMR		98,90
17	**A525003600**	Cromado Chromed	4,85
	AG02128CNR		8,26
	AG02128RGR		6,59
	AG02128NMR		12,70
18	**A525024200**	Cromado Chromed	9,74
	AG02130CNR		15,00
	AG02130RGR		13,50
	AG02130NMR		18,80

			€
19	**A525023600**	Cromado Chromed	35,50
	AG02129CNR		32,30
	AG02129RGR		29,10
	AG02129NMR		33,20
20	**AG0213100R**		8,70
	AG02131CNR		16,20
	AG02131RGR		15,00
	AG02131NMR		17,70
21	**AG0001907R**		11,00
22	**AG0103908R**		17,30
23	**AG0142100R**		3,20
24	**AG0116800R**		9,26
	AG01168CNR		69,10
	AG01168RGR		53,50
	AG01168NMR		68,30
25	**AG0137000R**		11,30
	AG01370CNR		49,20
	AG01370RGR		51,70
	AG01370NMR		57,90
26	**AG0036800R**		3,71
	AG00368CNR		7,38
	AG00368RGR		6,12
	AG00368NMR		9,58
27	**A525005507**		7,44

		€
28	**AG0003700R**	13,70
29	**A525009800**	27,10
30	**A5B8113C00**	-
31	**AG0117207R**	2,58
32	**AG0136700R**	29,70
33	**AG0126009R**	17,00
34	**AG0136903R**	9,95
35	**AG0033300R**	30,00
36	**A525004600**	8,20
37	**AG0117300R**	4,33
38	**AG0155000R**	9,41
39	**A525005407**	7,44
40	**AG0163900R**	35,80
41	**AG0159300R**	12,50
42	**A505400900**	-
	A5054009CN	N.D.
	A5054009RG	-
	A5054009NM	N.D.
43	**AG0200700R**	19,40
44	**AG0096509R**	16,40
45	**AG0125909R**	18,30

Ona

Grifería para lavabo y bidé / Basin and bidet faucet

A5A309E
A5A3A9E
A5A3C9E

A5A609E
A5A629E

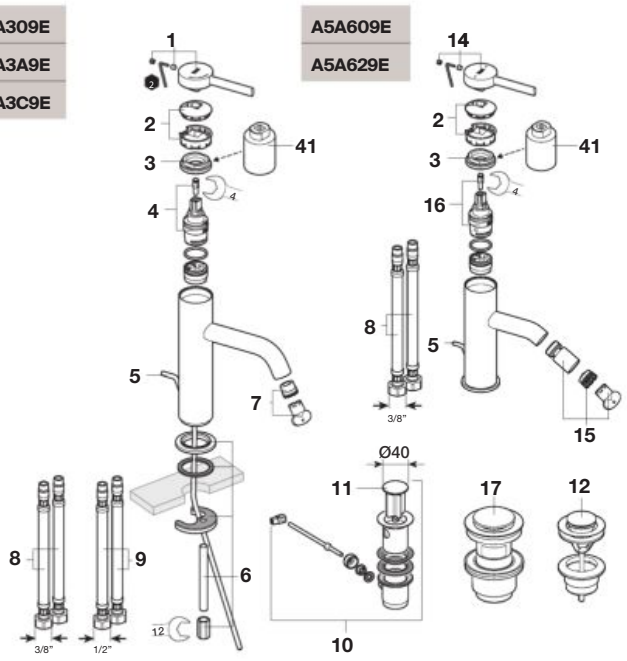

Grifería para lavabo / Basin faucet

A5A349E

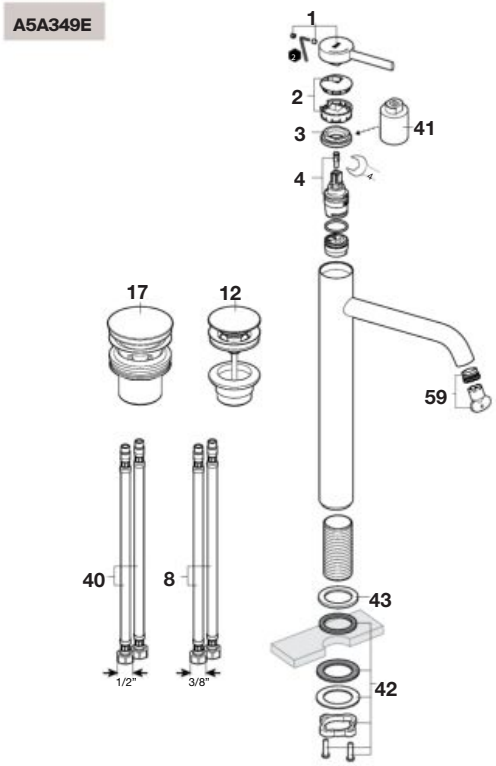

Los ultimos dígitos de la referencia de recambio indican el código del acabado:
Last digits of spare part reference indicate finish code:

Producto	Recambio	
00	00	Cromado / Chromed
CN	CN	Negro titanio / Titanium black
RG	RG	Oro rosado / Rose gold
VA	VA	Oro cepillado / Brushed Brass
SM	SM	Acero inoxidable / Stainless Steel
NB	BM/NB	Negro Mate / Matt black
B0	B0	Blanco Mate / Matt white

Códigos en (..): Sólo se muestra el precio del acabado cromado (**00**).
Codes (..): Only the price of the chrome finish is shown (**00**).

				€
1		**AG02298..R**		58,20
2		**AG02299..R**		29,10
3		**AG0230000R**		20,80
4		**AG0223200R**		11,60
5		**AG02233..R**		5,97
6		**AG02234..R**		8,62
7		**AG0122107R**		10,20
8		**AG0008009R**		10,60
9		**AG0103808R**		2,05
10		**AG00753..R**		28,80
11		**AG00962..R**		7,48
12		**A505400900**		-
13		**AG0230700R**		2,68
14		**AG02301..R**		58,20
15		**AG00323..R**		15,90
16		**AG0223600R**		10,50
17		**A505401000**	chrome	-
		A5054015..		-
18		**AG0223700R**		12,50
19		**AG02287..R**		5,27
20		**AG02166..R**		2,89
21		**AG0126303R**		12,30
22		**AG0110607R**		9,98
23		**A525087203**		9,69
24	2 un	**AG01168..R**		9,26
25	2 un	**AG0103908R**		17,30
26	2 un	**AG0126203R**		16,10

				€
27		**A525005200**	chrome	15,30
		AG02131..R		8,70
28		**AG02130..R**		9,06
29	2 un	**A525005507**		7,44
30		**A5B1107..0**		-
31		**A525009800**		27,10
32		**AG01167..R**		4,36
33		**AG0216400R**		12,40
34		**AG0116500R**		13,90
35		**AG02302..R**	170mm	40,80
		AG02317..R	220mm	8,15
36		**AG0230300R**		10,80
37		**AG02304..R**		20,00
38		**AG02305..R**		14,60
39		**AG02306..R**		28,60
40		**AG0223800R**		16,20
41		**AG0244500R**		77,60
42		**AG0225400R**		29,90
43		**AG02317..R**		8,15
44		**AG02545..R**		18,30
45		**AG02546..R**		23,50
46		**AG0254700R**		5,77
47		**AG0245600R**		15,30
48		**AG02548..R**		36,70
49		**AG02549..R**		12,30
50		**AG02550..R**		0,97
51		**A525020409**		18,60

				€
52		**AG02458..R**		4,97
53		**AG0245700R**		3,97
54		**AG02551..R**		17,60
55		**AG0246000R**		107,00
56		**AG02552..R**		5,76
57		**AG0245500R**		9,41
58		**AG0119708R**		16,40
59		**AG0243800R**		15,50
60		**AG02563..R**	283mm	71,80
		AG02565..R	323mm	75,50
61		**AG02564..R**		58,60
62		**AG0145600R**		17,40
63		**A5B9B61..0**		-
64		**AG02577..R**		38,60
65		**AG0257800R**		150,00
66		**AG0257900R**		109,00
67		**AG02580..R**		17,70
68		**AG02581..R**		9,12
69		**AG0258200R**		45,30
70		**AG02583..R**		14,60
71		**AG02584..R**		10,10
72		**AG0258500R**		11,70
73		**AG02685..R**		22,60
74		**AG02586..R**		11,60
75		**AG02587..R**		41,70
76		**AG0085907R**		8,11

Ona

Grifería para lavabo / Basin faucet

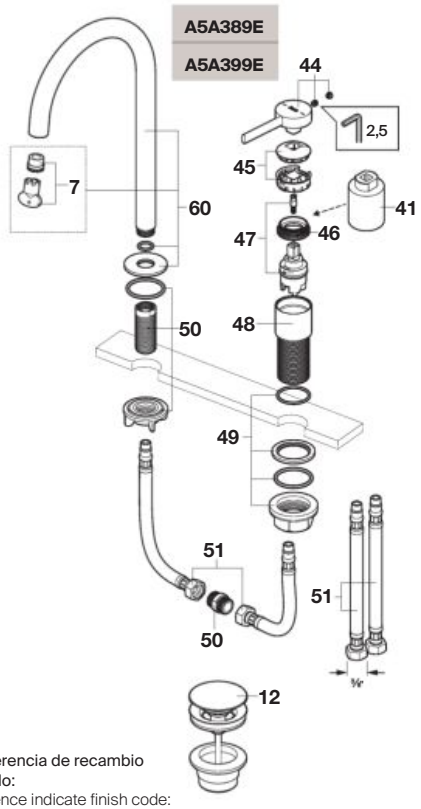

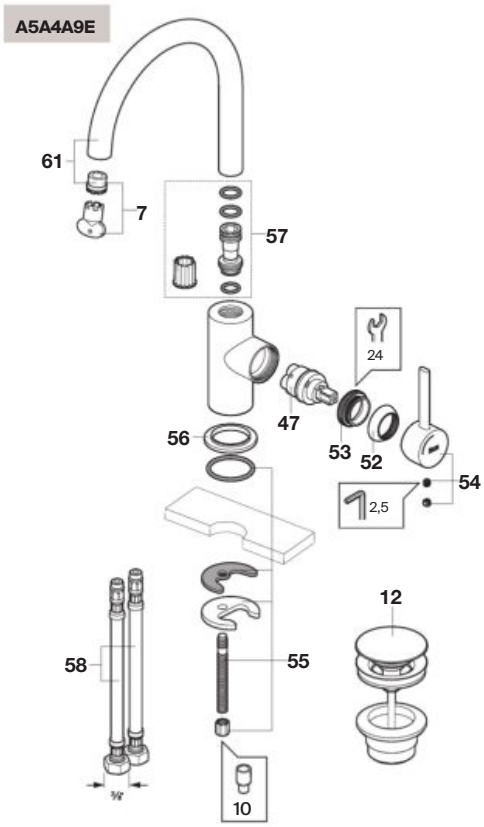

Los ultimos dígitos de la referencia de recambio indican el código del acabado:
Last digits of spare part reference indicate finish code:

Producto	Recambio	
00	00	Cromado / Chromed
CN	CN	Negro titanio / Titanium black
RG	RG	Oro rosado / Rose gold
VA	VA	Oro cepillado / Brushed Brass
SM	SM	Acero inoxidable / Stainless Steel
NB	BM/NB	Negro Mate / Matt black
B0	B0	Blanco Mate / Matt white

Códigos en (..): Sólo se muestra el precio del acabado cromado (**00**).
Codes (..): Only the price of the chrome finish is shown (**00**).

				€
1		**AG02298..R**		58,20
2		**AG02299..R**		29,10
3		**AG0230000R**		20,80
4		**AG0223200R**		11,60
5		**AG02233..R**		5,97
6		**AG02234..R**		8,62
7		**AG0122107R**		10,20
8		**AG0008009R**		10,60
9		**AG0103808R**		2,05
10		**AG00753..R**		28,80
11		**AG00962..R**		7,48
12		**A505400900**		-
13		**AG0230700R**		2,68
14		**AG02301..R**		58,20
15		**AG00323..R**		15,90
16		**AG0223600R**		10,50
17		**A505401000**	chrome	-
		A5054015..		-
18		**AG0223700R**		12,50
19		**AG02287..R**		5,27
20		**AG02166..R**		2,89
21		**AG0126303R**		12,30
22		**AG0110607R**		9,98
23		**A525087203**		9,69
24	2 un	**AG01168..R**		9,26
25	2 un	**AG0103908R**		17,30
26	2 un	**AG0126203R**		16,10

				€
27		**A525005200**	chrome	15,30
		AG02131..R		8,70
28		**AG02130..R**		9,06
29	2 un	**A525005507**		7,44
30		**A5B1107.0**		-
31		**A525009800**		27,10
32		**AG01167..R**		4,36
33		**AG0216400R**		12,40
34		**AG0116500R**		13,90
35		**AG02302..R**	170mm	40,80
		AG02317..R	220mm	8,15
36		**AG0230300R**		10,80
37		**AG02304..R**		20,00
38		**AG02305..R**		14,60
39		**AG02306..R**		28,60
40		**AG0223800R**		16,20
41		**AG0244500R**		77,60
42		**AG0225400R**		29,90
43		**AG02317..R**		8,15
44		**AG02545..R**		18,30
45		**AG02546..R**		23,50
46		**AG0254700R**		5,77
47		**AG0245600R**		15,30
48		**AG02548..R**		36,70
49		**AG02549..R**		12,30
50		**AG02550..R**		0,97
51		**A525020409**		18,60

				€
52		**AG02458..R**		4,97
53		**AG0245700R**		3,97
54		**AG02551..R**		17,60
55		**AG0246000R**		107,00
56		**AG02552..R**		5,76
57		**AG0245500R**		9,41
58		**AG0119708R**		16,40
59		**AG0243800R**		15,50
60		**AG02563..R**	283mm	71,80
		AG02565..R	323mm	75,50
61		**AG02564..R**		58,60
62		**AG0145600R**		17,40
63		**A5B9B61..0**		-
64		**AG02577..R**		38,60
65		**AG0257800R**		150,00
66		**AG0257900R**		109,00
67		**AG02580..R**		17,70
68		**AG02581..R**		9,12
69		**AG0258200R**		45,30
70		**AG02583..R**		14,60
71		**AG02584..R**		10,10
72		**AG0258500R**		11,70
73		**AG02685..R**		22,60
74		**AG02586..R**		11,60
75		**AG02587..R**		41,70
76		**AG0085907R**		8,11

Ona

Grifería para baño / Bath faucet

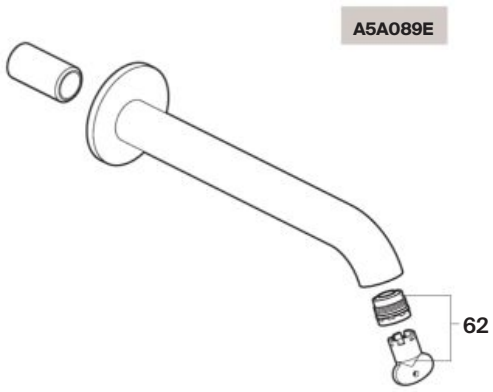

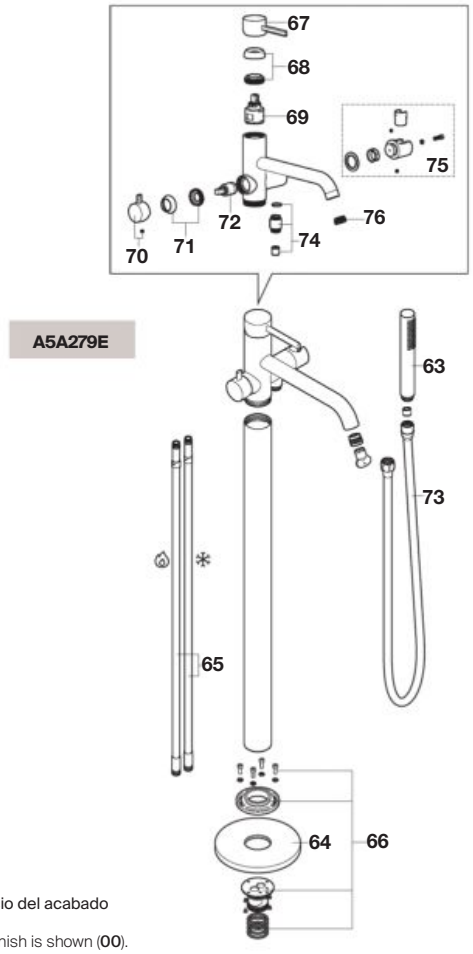

Los ultimos dígitos de la referencia de recambio indican el código del acabado:
Last digits of spare part reference indicate finish code:

Producto	Recambio	
00	00	Cromado / Chromed
CN	CN	Negro titanio / Titanium black
RG	RG	Oro rosado / Rose gold
VA	VA	Oro cepillado / Brushed Brass
SM	SM	Acero inoxidable / Stainless Steel
NB	BM/NB	Negro Mate / Matt black
B0	B0	Blanco Mate / Matt white

Códigos en (..): Sólo se muestra el precio del acabado cromado (00).
Codes (..): Only the price of the chrome finish is shown (00).

				€
1		AG02298..R		58,20
2		AG02299..R		29,10
3		AG0230000R		20,80
4		AG0223200R		11,60
5		AG02233..R		5,97
6		AG02234..R		8,62
7		AG0122107R		10,20
8		AG0008009R		10,60
9		AG0103808R		2,05
10		AG00753..R		28,80
11		AG00962..R		7,48
12		A505400900		-
13		AG0230700R		2,68
14		AG02301..R		58,20
15		AG00323..R		15,90
16		AG0223600R		10,50
17		A505401000	chrome	-
		A5054015..		-
18		AG0223700R		12,50
19		AG02287..R		5,27
20		AG02166..R		2,89
21		AG0126303R		12,30
22		AG0110607R		9,98
23		A525087203		9,69
24	2 un	AG01168..R		9,26
25	2 un	AG0103908R		17,30
26	2 un	AG0126203R		16,10

				€
27		A525005200	chrome	15,30
		AG02131..R		8,70
28		AG02130..R		9,06
29	2 un	A525005507		7,44
30		A5B1107.0		-
31		A525009800		27,10
32		AG01167..R		4,36
33		AG0216400R		12,40
34		AG0116500R		13,90
35		AG02302..R	170mm	40,80
		AG02317..R	220mm	8,15
36		AG0230300R		10,80
37		AG02304..R		20,00
38		AG02305..R		14,60
39		AG02306..R		28,60
40		AG0223800R		16,20
41		AG0244500R		77,60
42		AG0225400R		29,90
43		AG02317..R		8,15
44		AG02545..R		18,30
45		AG02546..R		23,50
46		AG0254700R		5,77
47		AG0245600R		15,30
48		AG02548..R		36,70
49		AG02549..R		12,30
50		AG02550..R		0,97
51		A525020409		18,60

				€
52		AG02458..R		4,97
53		AG0245700R		3,97
54		AG02551..R		17,60
55		AG0246000R		107,00
56		AG02552..R		5,76
57		AG0245500R		9,41
58		AG0119708R		16,40
59		AG0243800R		15,50
60		AG02563..R	283mm	71,80
		AG02565..R	323mm	75,50
61		AG02564..R		58,60
62		AG0145600R		17,40
63		A5B9B61..0		-
64		AG02577..R		38,60
65		AG0257800R		150,00
66		AG0257900R		109,00
67		AG02580..R		17,70
68		AG02581..R		9,12
69		AG0258200R		45,30
70		AG02583..R		14,60
71		AG02584..R		10,10
72		AG0258500R		11,70
73		AG02685..R		22,60
74		AG02586..R		11,60
75		AG02587..R		41,70
76		AG0085907R		8,11

Ona

Grifería para ducha / Shower faucet

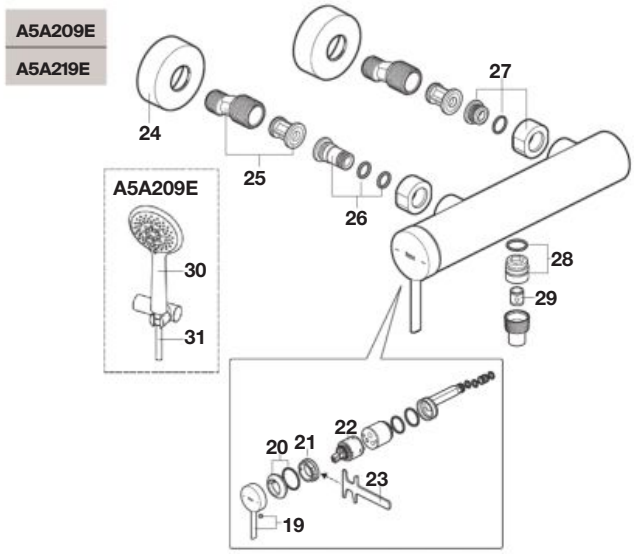

Grifería para baño y ducha / Bath and shower faucet

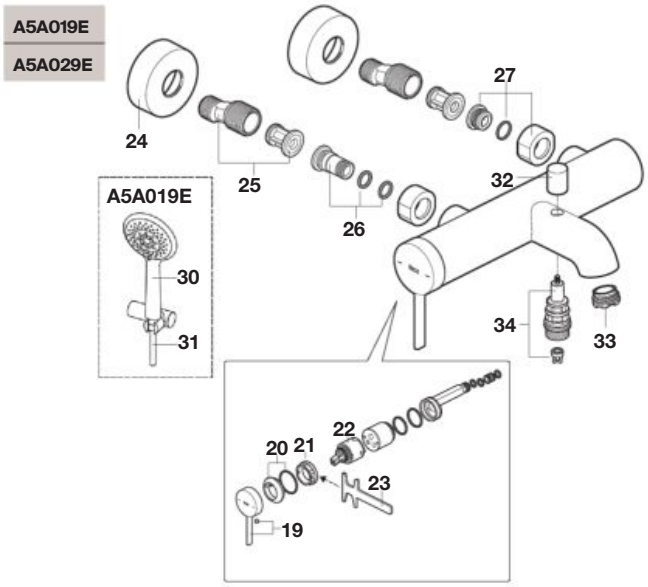

Los ultimos dígitos de la referencia de recambio indican el código del acabado:
Last digits of spare part reference indicate finish code:

Producto	Recambio	
00	00	Cromado / Chromed
CN	CN	Negro titanio / Titanium black
RG	RG	Oro rosado / Rose gold
VA	VA	Oro cepillado / Brushed Brass
SM	SM	Acero inoxidable / Stainless Steel
NB	BM/NB	Negro Mate / Matt black
B0	B0	Blanco Mate / Matt white

Códigos en (..): Sólo se muestra el precio del acabado cromado (**00**).
Codes (..): Only the price of the chrome finish is shown (**00**).

				€
1		**AG02298..R**		58,20
2		**AG02299..R**		29,10
3		**AG0230000R**		20,80
4		**AG0223200R**		11,60
5		**AG02233..R**		5,97
6		**AG02234..R**		8,62
7		**AG0122107R**		10,20
8		**AG0008009R**		10,60
9		**AG0103808R**		2,05
10		**AG00753..R**		28,80
11		**AG00962..R**		7,48
12		**A505400900**		-
13		**AG0230700R**		2,68
14		**AG02301..R**		58,20
15		**AG00323..R**		15,90
16		**AG0223600R**		10,50
17		**A505401000**	chrome	-
		A5054015..		-
18		**AG0223700R**		12,50
19		**AG02287..R**		5,27
20		**AG02166..R**		2,89
21		**AG0126303R**		12,30
22		**AG0110607R**		9,98
23		**A525087203**		9,69
24	2 un	**AG01168..R**		9,26
25	2 un	**AG0103908R**		17,30
26	2 un	**AG0126203R**		16,10

				€
27		**A525005200**	chrome	15,30
		AG02131..R		8,70
28		**AG02130..R**		9,06
29	2 un	**A525005507**		7,44
30		**A5B1107.0**		
31		**A525009800**		27,10
32		**AG01167.R**		4,36
33		**AG0216400R**		12,40
34		**AG0116500R**		13,90
35		**AG02302..R**	170mm	40,80
		AG02317..R	220mm	8,15
36		**AG0230300R**		10,80
37		**AG02304..R**		20,00
38		**AG02305..R**		14,60
39		**AG02306..R**		28,60
40		**AG0223800R**		16,20
41		**AG0244500R**		77,60
42		**AG0225400R**		29,90
43		**AG02317..R**		8,15
44		**AG02545..R**		18,30
45		**AG02546..R**		23,50
46		**AG0254700R**		5,77
47		**AG0245600R**		15,30
48		**AG02548..R**		36,70
49		**AG02549..R**		12,30
50		**AG02550..R**		0,97
51		**A525020409**		18,60

				€
52		**AG02458..R**		4,97
53		**AG0245700R**		3,97
54		**AG02551..R**		17,60
55		**AG0246000R**		107,00
56		**AG02552..R**		5,76
57		**AG0245500R**		9,41
58		**AG0119708R**		16,40
59		**AG0243800R**		15,50
60		**AG02563..R**	283mm	71,80
		AG02565..R	323mm	75,50
61		**AG02564..R**		58,60
62		**AG0145600R**		17,40
63		**A5B9B61..0**		-
64		**AG02577.R**		38,60
65		**AG0257800R**		150,00
66		**AG0257900R**		109,00
67		**AG02580..R**		17,70
68		**AG02581..R**		9,12
69		**AG0258200R**		45,30
70		**AG02583..R**		14,60
71		**AG02584..R**		10,10
72		**AG0258500R**		11,70
73		**AG02685..R**		22,60
74		**AG02586..R**		11,60
75		**AG02587.R**		41,70
76		**AG0085907R**		8,11

Ona

Grifería empotrable para lavabo / Wall-mounted basin faucet

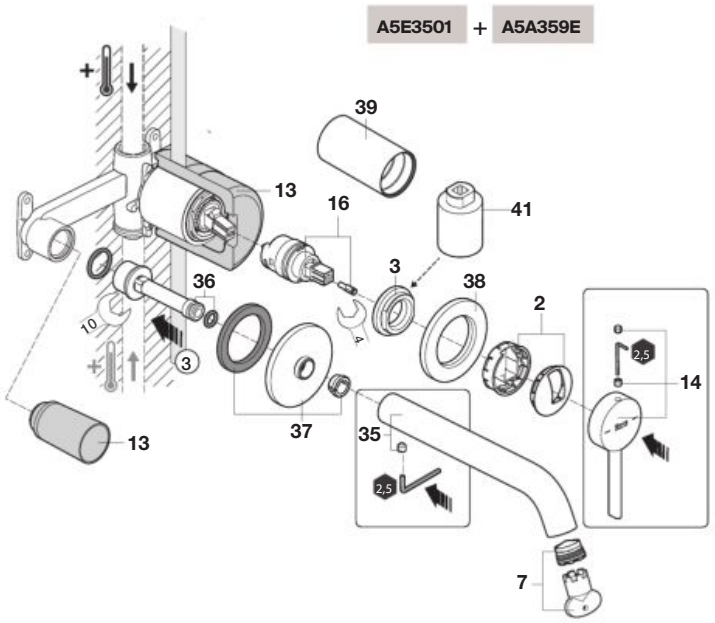

Los ultimos dígitos de la referencia de recambio indican el código del acabado:
Last digits of spare part reference indicate finish code:

Producto	Recambio	
00	00	Cromado / Chromed
CN	CN	Negro titanio / Titanium black
RG	RG	Oro rosado / Rose gold
VA	VA	Oro cepillado / Brushed Brass
SM	SM	Acero inoxidable / Stainless Steel
NB	BM/NB	Negro Mate / Matt black
B0	B0	Blanco Mate / Matt white

Códigos en (..): Sólo se muestra el precio del acabado cromado (**00**).
Codes (..): Only the price of the chrome finish is shown (**00**).

				€
1		**AG02298..R**		58,20
2		**AG02299..R**		29,10
3		**AG0230000R**		20,80
4		**AG0223200R**		11,60
5		**AG02233..R**		5,97
6		**AG02234..R**		8,62
7		**AG0122107R**		10,20
8		**AG0008009R**		10,60
9		**AG0103808R**		2,05
10		**AG00753..R**		28,80
11		**AG00962..R**		7,48
12		**A505400900**		-
13		**AG0230700R**		2,68
14		**AG02301..R**		58,20
15		**AG00323..R**		15,90
16		**AG0223600R**		10,50
17		**A505401000**	chrome	-
		A5054015..		-
18		**AG0223700R**		12,50
19		**AG02287..R**		5,27
20		**AG02166..R**		2,89
21		**AG0126303R**		12,30
22		**AG0110607R**		9,98
23		**A525087203**		9,69
24	2 un	**AG01168..R**		9,26
25	2 un	**AG0103908R**		17,30
26	2 un	**AG0126203R**		16,10

				€
27		**A525005200**	chrome	15,30
		AG02131..R		8,70
28		**AG02130..R**		9,06
29	2 un	**A525005507**		7,44
30		**A5B1107.0**		-
31		**A525009800**		27,10
32		**AG01167..R**		4,36
33		**AG0216400R**		12,40
34		**AG0116500R**		13,90
35		**AG02302..R**	170mm	40,80
		AG02317..R	220mm	8,15
36		**AG0230300R**		10,80
37		**AG02304..R**		20,00
38		**AG02305..R**		14,60
39		**AG02306..R**		28,60
40		**AG0223800R**		16,20
41		**AG0244500R**		77,60
42		**AG0225400R**		29,90
43		**AG02317..R**		8,15
44		**AG02545..R**		18,30
45		**AG02546..R**		23,50
46		**AG0254700R**		5,77
47		**AG0245600R**		15,30
48		**AG02548..R**		36,70
49		**AG02549..R**		12,30
50		**AG02550..R**		0,97
51		**A525020409**		18,60

				€
52		**AG02458..R**		4,97
53		**AG0245700R**		3,97
54		**AG02551..R**		17,60
55		**AG0246000R**		107,00
56		**AG02552..R**		5,76
57		**AG0245500R**		9,41
58		**AG0119708R**		16,40
59		**AG0243800R**		15,50
60		**AG02563..R**	283mm	71,80
		AG02565..R	323mm	75,50
61		**AG02564..R**		58,60
62		**AG0145600R**		17,40
63		**A5B9B61..0**		-
64		**AG02577..R**		38,60
65		**AG0257800R**		150,00
66		**AG0257900R**		109,00
67		**AG02580..R**		17,70
68		**AG02581..R**		9,12
69		**AG0258200R**		45,30
70		**AG02583..R**		14,60
71		**AG02584..R**		10,10
72		**AG0258500R**		11,70
73		**AG02685..R**		22,60
74		**AG02586..R**		11,60
75		**AG02587..R**		41,70
76		**AG0085907R**		8,11

Ona

Grifería empotrable para baño y ducha / Wall-mounted bath and shower faucet

A5A0B9E

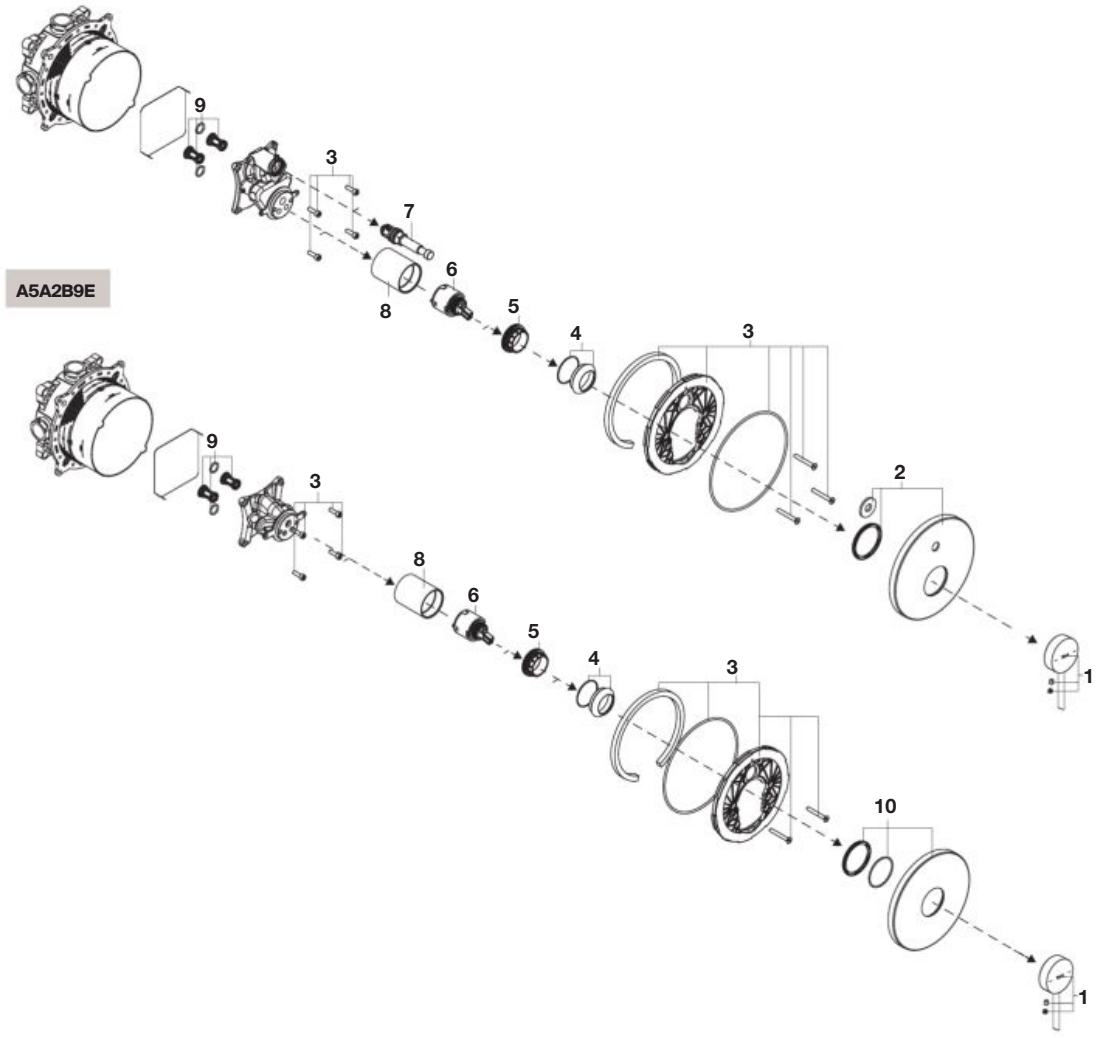

A5A2B9E

Los ultimos dígitos de la referencia de recambio indican el código del acabado:
Last digits of spare part reference indicate finish code:

Producto	Recambio	
00	00	Cromado / Chromed
CN	CN	Negro titanio / Titanium black
RG	RG	Oro rosado / Rose gold
NB	BM/NB	Negro mate / Matt black
B0	B0	Blanco Mate / Matt white

			€
1	**AG0228700R**		5,27
	AG02287CNR		11,70
	AG02287RGR		11,70
	AG02287NBR		12,30
2	**AG0121300R**		21,10
	AG01213CNR		26,50
	AG01213RGR		25,80
	AG01213NMR		32,90

			€
3	**AG0120900R**		23,50
4	**AG0216600R**		2,89
	AG02166CNR		2,36
	AG02166RGR		2,36
	AG02166BMR		6,53
5	**AG0228800R**		22,30
6	**AG0110607R**		9,98

			€
7	**AG02186CNR**		73,00
	AG02186RGR		63,90
	AG02186BMR		-
	A525006500	Cromado / Chromed	23,30
8	**AG01217..R**		119,00
9	**AG0121000R**		21,70

			€
10	**AG0121200R**		19,90
	AG01212CNR		25,50
	AG01212RGR		24,20
	AG01212NMR		31,80

Evol

Grifería para lavabo / Basin faucet

A5A3049

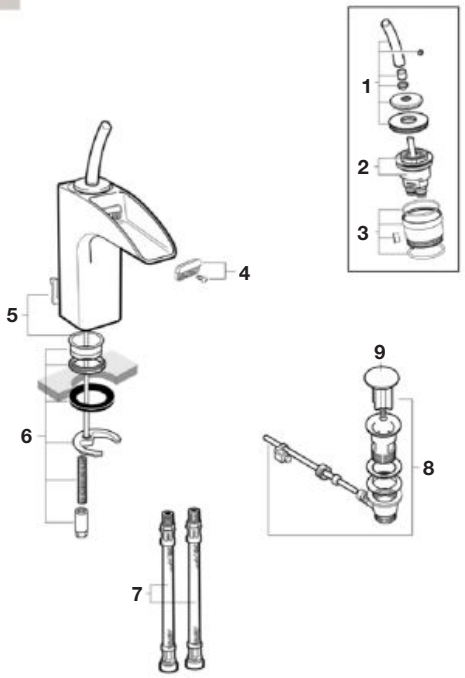

Grifería de caño alto para lavabo
Extended height basin faucet

A5A3449

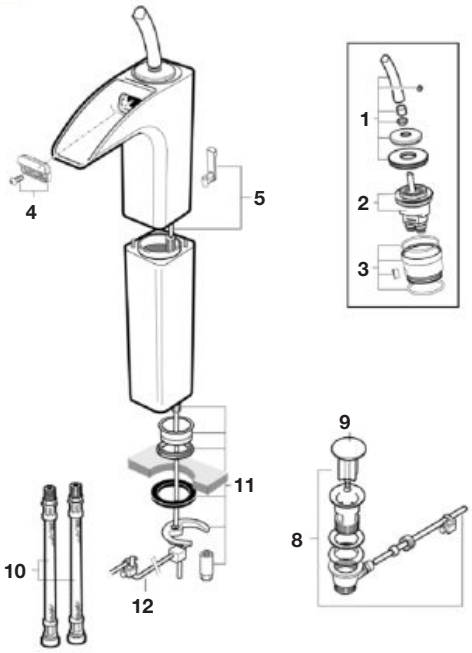

Grifería empotrable para lavabo
Wall-mounted basin faucet

A5A4749

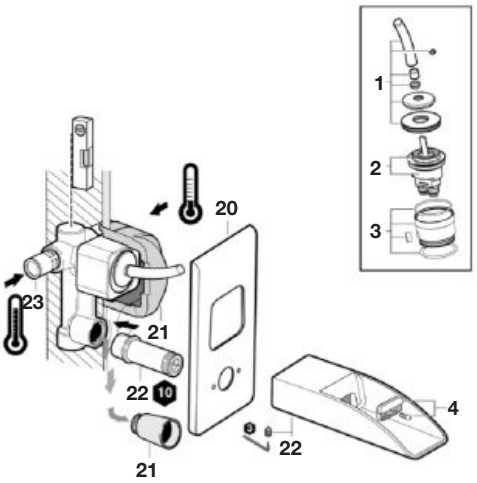

Grifería para baño y ducha / Bath and shower faucet

A5A0149

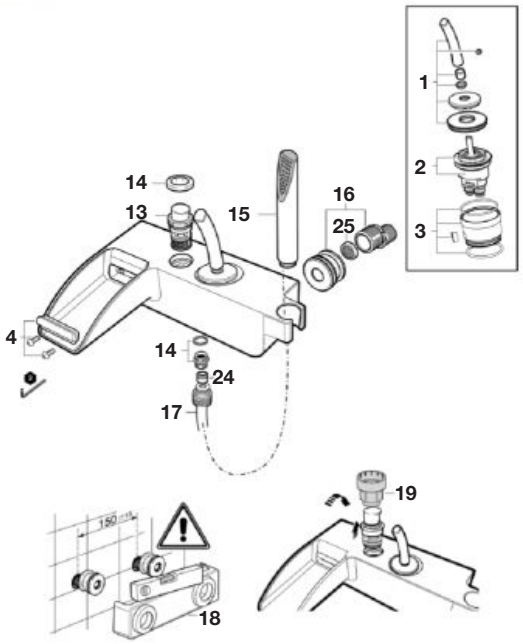

		€
1	**AG0043500R**	150,00
2	**A525018507**	72,60
3	**AG0040607R**	9,29
4	**A525018600**	26,80
5	**A525023000**	12,50

		€
6	**A525021803**	13,20
7	**AG0035509R**	19,90
8	**A525021200**	31,20
9	**AG0055800R**	14,40
10	**A525020409**	18,60

		€
11	**A525022703**	32,00
12	**AG0033300R**	30,00
13	**A525023600**	35,50
14	**A525024200**	9,74
15	**A5B9047C00**	-

		€
16	**A525021703**	112,00
17	**A525009900**	52,60
18	**A525021907**	3,29
19	**A525005407**	7,44
20	**A524814200**	47,20

		€
21	**A525029207**	13,70
22	**A525019000**	261,00
23	**A525024803**	38,30
24	**A525005507**	7,44
25	**A525016207**	2,56

Thesis

Grifería para lavabo y bidé / Basin and bidet faucet

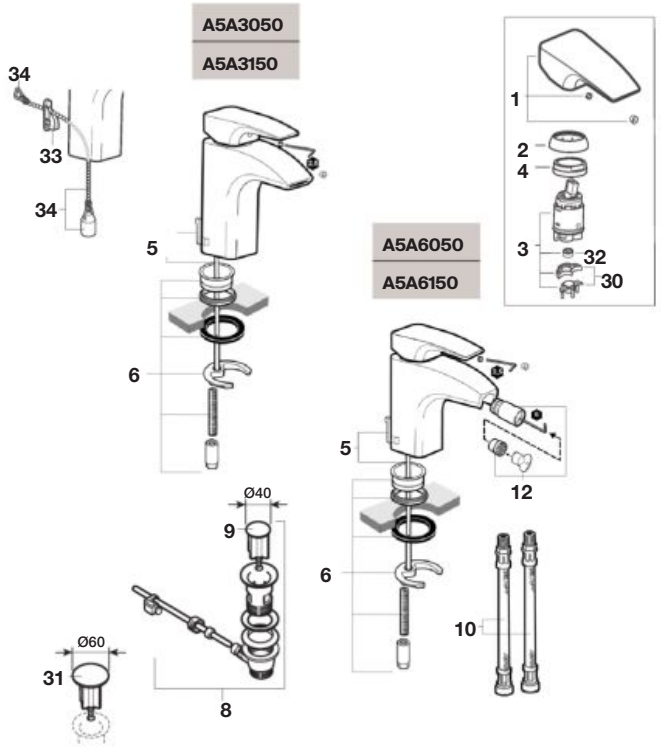

Grifería de caño alto para lavabo
Extended height basin faucet

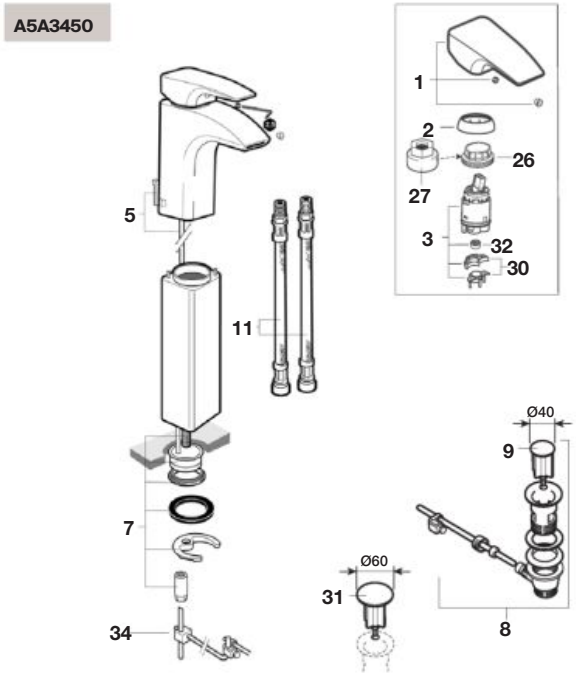

Grifería para baño y ducha / Bath and shower faucet

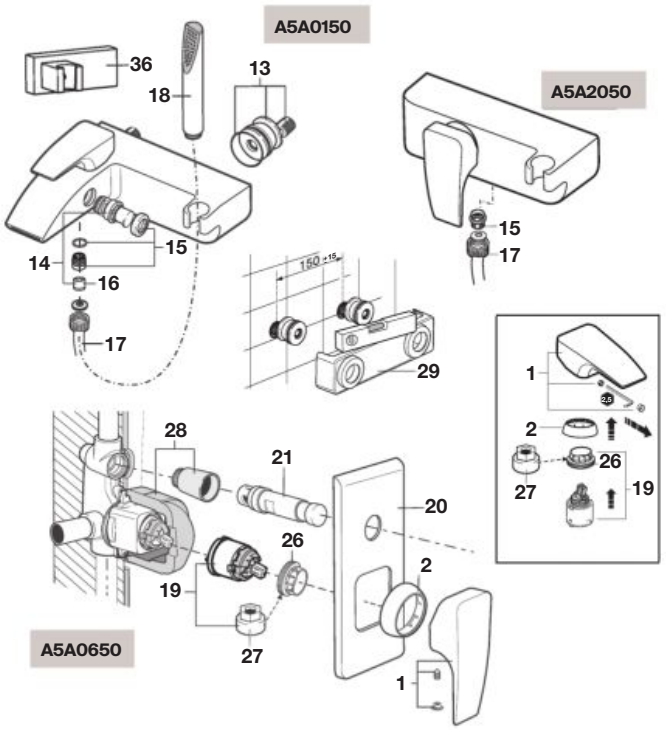

Grifería para baño o ducha y para lavabo
Bath or shower and basin faucet

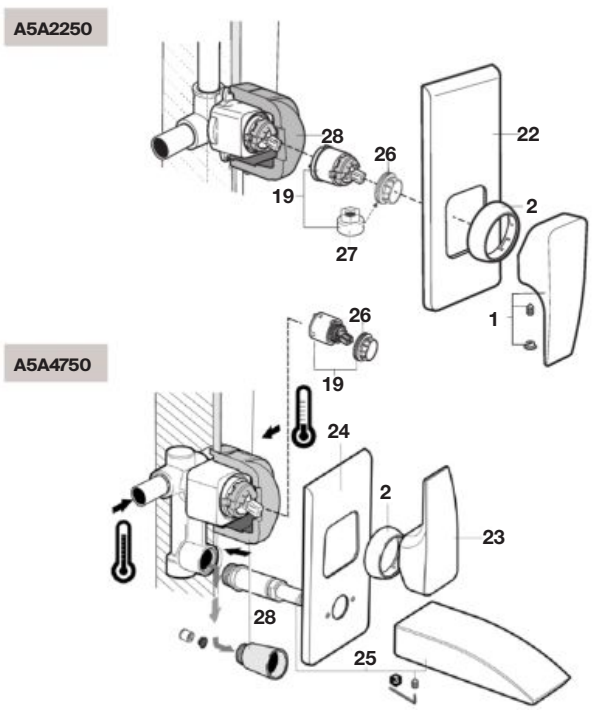

		€
1	**A525022600**	32,90
2	**AG0085300R**	18,00
3	**A525022907**	20,80
4	**A525027803**	32,40
5	**A525023000**	12,50
6	**A525021803**	13,20
7	**A525022703**	32,00
8	**AG0075300R**	28,80

		€
9	**AG0096200R**	7,48
10	**AG0035509R**	19,90
11	**A525020409**	18,60
12	**A525555207**	31,80
13	**A525021703**	112,00
14	**A525023600**	35,50
15	**A525024200**	9,74
16	**A525005507**	7,44

		€
17	**A525009800**	27,10
18	**A5B9047C00**	-
19	**AG0053707R**	39,20
20	**A524814000**	62,40
21	**A525022800**	85,90
22	**A524814100**	54,90
23	**A525023700**	32,90
24	**A524814200**	47,20

		€
25	**A525023900**	221,00
26	**A525023507**	4,23
27	**A525005407**	7,44
28	**A525029207**	13,70
29	**A525021907**	3,29
30	**A525555307**	9,98
31	**AG0055800R**	14,40
32	**AG0130907R**	5,29

		€
33	**AG0071300R**	7,73
34	**A525004600**	8,20
35	**AG0033300R**	30,00
36	**A525021600**	32,70

Thesis

Grifería para lavabo / Basin faucet

A5A4450

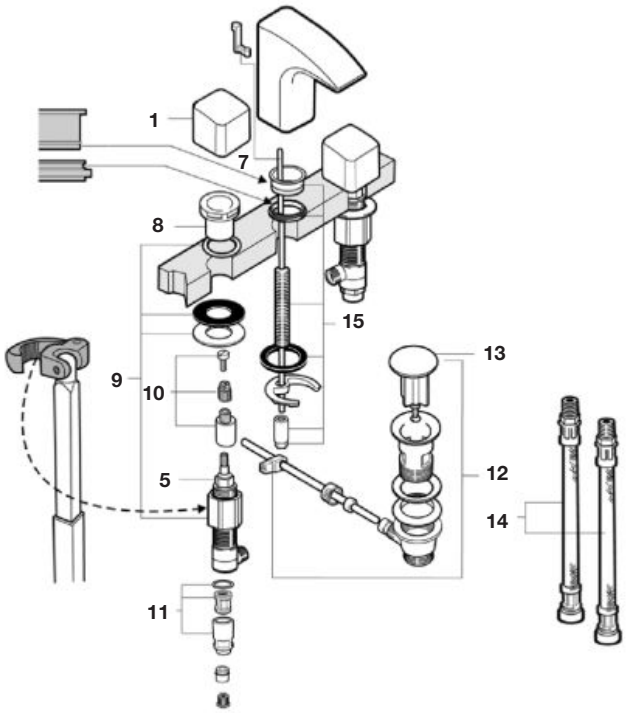

Grifería para lavabo / Basin faucet

A5A4550

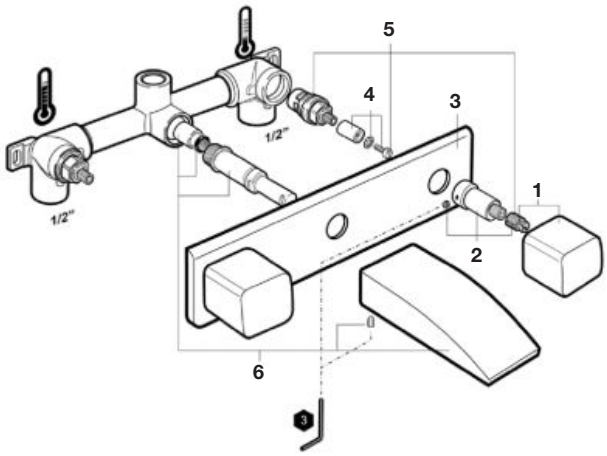

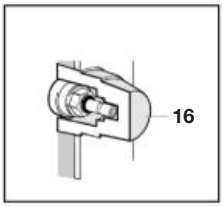

		€
1	**A525023300**	32,30
2	**A525024303**	16,50
3	**A525024400**	63,90
4	**A525024503**	17,00

		€
5	**A525092709**	73,20
6	**A525023900**	221,00
7	**A525023000**	12,50
8	**A525024600**	110,00

		€
9	**A525023803**	46,40
10	**A525024703**	21,50
11	**A525024803**	38,30
12	**A525021200**	31,20

		€
13	**AG0055800R**	14,40
14	**A525020509**	13,20
15	**A525021803**	13,20
16	**A525029307**	9,29

Thesis

Grifería termostática para baño y ducha
Bath and shower thermostatic faucet

A5A1150

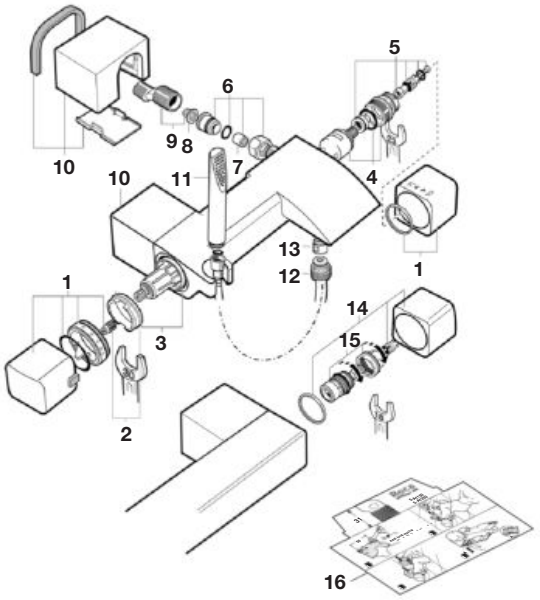

Grifería termostática empotrable para baño y ducha
Wall-mounted bath and shower thermostatic faucet

A5A2850

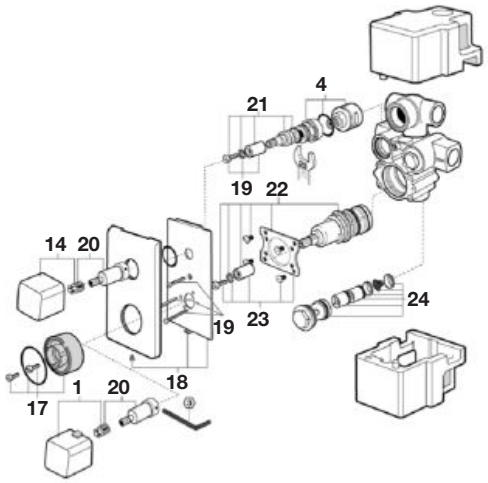

Grifería termostática empotrable para baño o ducha
Wall-mounted bath or shower thermostatic faucet

A5A2950

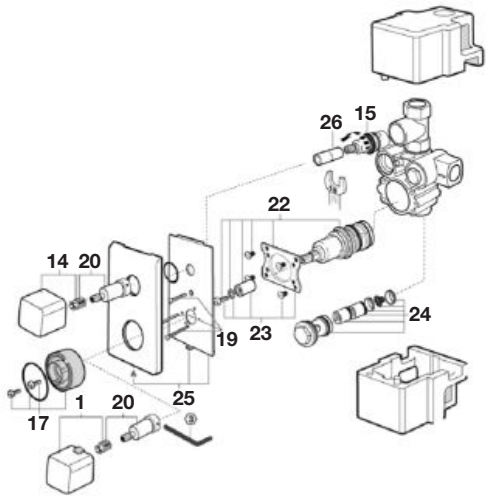

		€
1	**AG0021800R**	95,50
2	**AG0020703R**	22,60
3	**A525028003**	81,70
4	**A525012503**	33,20
5	**AG0024703R**	24,20
6	**AG0021700R**	40,90

		€
7	**AG0021407R**	16,20
8	**A525027207**	3,88
9	**AG0103908R**	17,30
10	**AG0025900R**	40,50
11	**A5B9047C00**	-
12	**A525009800**	27,10

		€
13	**A525024200**	9,74
14	**A525023300**	32,30
15	**AG0020903R**	51,50
16	**AG0025807R**	4,98
17	**AG0040000R**	8,20
18	**AG0024400R**	205,00

		€
19	**AG0028703R**	16,40
20	**A525024303**	16,50
21	**AG0021003R**	36,40
22	**A525017303**	125,00
23	**AG0021103R**	18,30
24	**A525018003**	87,70

		€
25	**AG0024500R**	137,00
26	**AG0024803R**	9,32

Lanta

Grifería para lavabo y bidé / Basin and bidet faucet

A5A3411C00
A5A3C11C00
A5A3011C00
A5A3A11C00
A5A3111C00
A5A6111C00
A5A6011C00

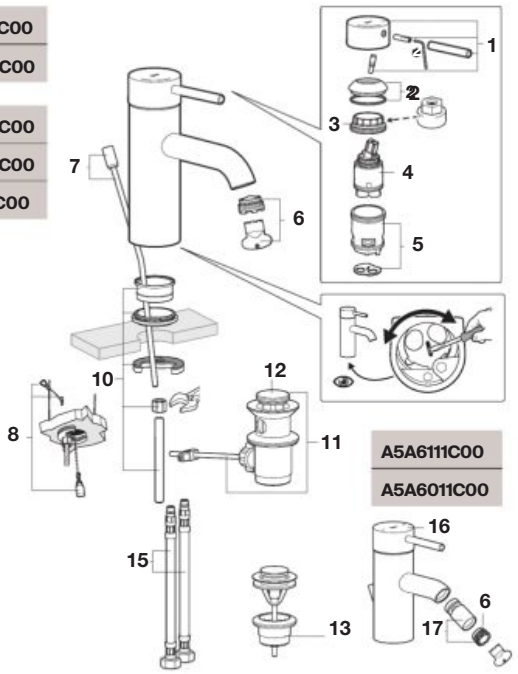

Grifería monomando empotrable para lavabo
Wall-mounted single lever basin

A525220603 + A5A3511

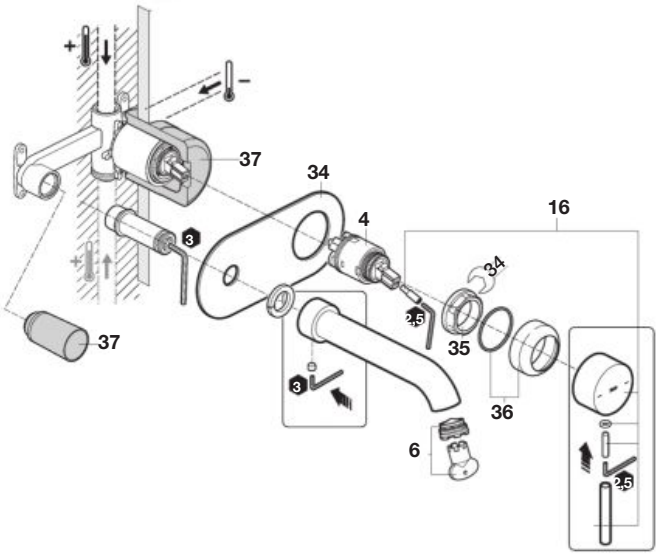

Grifería para baño y ducha / Bath and shower faucet

A5A0211C00
A5A0111C00

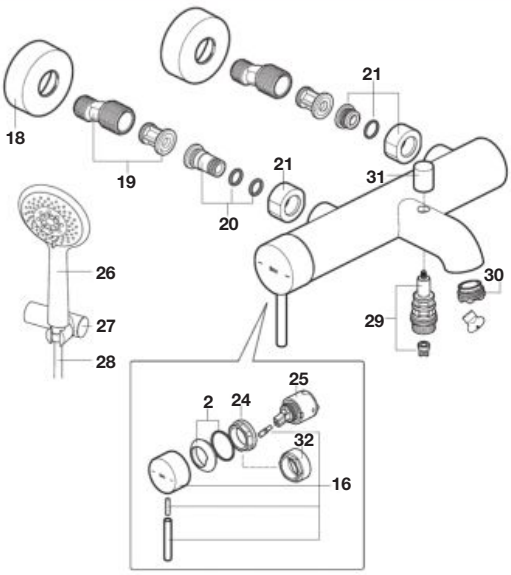

Grifería para ducha / Shower faucet

A5A2111C00
A5A2011C00

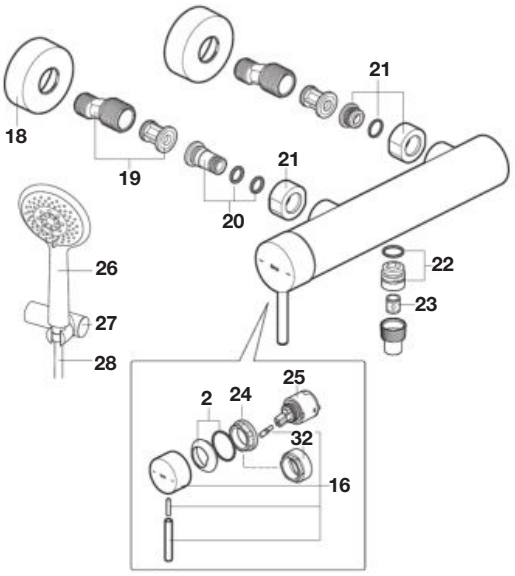

		€
1	AG0125600R	62,10
2	AG0121500R	23,50
3	A525023507	4,23
4	AG0141207R	19,20
5	AG0096307R	6,45
6	AG0125707R	12,80
7	AG0002100R	8,45
8	A525004600	8,20
10	A525004403	7,92
11	AG0075300R	28,80
12	AG0096200R	7,48
13	A505400900	-

				€
15	2 un	AG0096409R	D10x3/8"H L-470	13,90
	2 un	AG0126009R	D10x1/2"F L-470	17,00
	2 un	AG0096509R	D10x3/8"H L-600	16,40
	2 un	AG0125909R	D10x1/2"F L-600	18,30
16		AG0121400R		61,80
17		AG0126100R		31,10
18		AG0116800R		9,26
19		AG0103908R		17,30
20		AG0126203R		16,10
21		A525005200		15,30
22		A525024200		9,74
23		A525005507		7,44
24		AG0126303R		12,30

		€
25	AG0110607R	9,98
26	A5B1103C00	-
27	AG0068500R	27,30
28	A525009800	27,10
29	AG0116500R	13,90
30	A525087607	7,92
31	AG0116700R	4,36
32	AG0136200R	22,60
34	AG0142000R	22,10
35	AG0142100R	3,20
36	AG0142200R	10,90
37	AG0001907R	11,00

Targa-N

Grifería para lavabo y bidé / Basin and bidet faucet

A5A305F
A5A325F
A5A3A5F

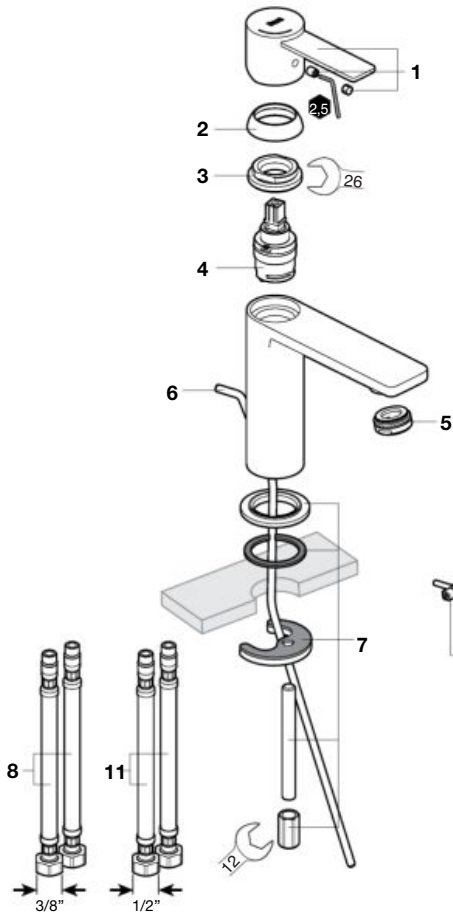

A5A605F
A5A625F

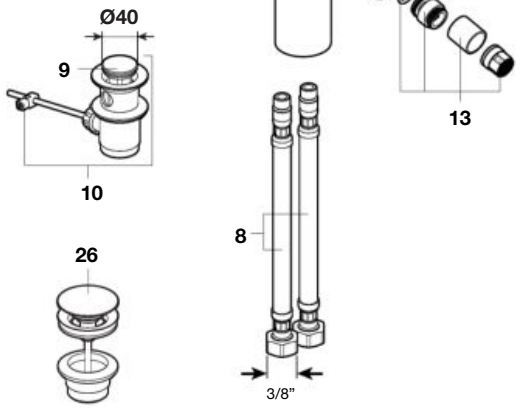

Los ultimos dígitos de la referencia de recambio indican el código del acabado:
Last digits of spare part reference indicate finish code:

00 Cromado / Chromed
NB Negro mate / Matt black
SM Acero inoxidable / Stainless steel
VA Oro cepillado / Brushed brass
B0 Blanco mate / Matt white

Códigos en (..): Sólo se muestra el precio del acabado cromado (**10**).
Codes (..): Only the price of the chrome finish is shown (**00**).

		€
1	**AG02557..R**	14,90
2	**AG02231..R**	3,97
3	**AG0222900R**	6,80
4	**AG0223200R**	11,60
5	**AG01964..R**	6,55
6	**AG02233..R**	5,97
7	**AG0223400R**	8,62
8	**A525020309**	15,00
9	**AG00962..R**	7,48
10	**AG00753..R**	28,80
11	**AG0125509R**	-
12	**AG02558..R**	15,00
13	**AG00323..R**	15,90
14	**AG0223600R**	10,50
15	**AG02317..R**	8,15

		€
16	**AG0225400R**	29,90
17	**AG0223700R**	12,50
18	**AG0223800R**	16,20
19	**AG02559..R**	21,80
20	**AG02560..R**	4,79
21	**AG0254700R**	5,77
22	**AG0245600R**	15,30
23	**AG00466..R**	11,40
24	**AG0246000R**	107,00
25	**AG02552..R**	5,76
26	**A5054015..**	-
27	**AG02561..R**	15,10
28	**A525023507**	4,23
29	**AG0116400R**	6,18
30	**AG0110607R**	9,98

			€
31	**A525005407**		7,44
32	**AG01168..R**	2 un	9,26
33	**AG0103908R**	2 un	17,30
34	**AG02131..R**	2 un	8,70
35	**A525005507**		7,44
36	**AG0036800R**		3,71
37	**AG02416..R**		7,53
38	**AG01167..R**		4,36
39	**AG02128..R**		3,15
40	**AG0134907R**		6,77
41	**AG02305..R**		14,60
42	**AG02304..R**		20,00
43	**AG02562..R**		13,60
44	**AG0230700R**		2,68
45	**AG0230300R**		10,80

Targa-N

Grifería para lavabo / Basin faucet

A5A345F

A5A405F

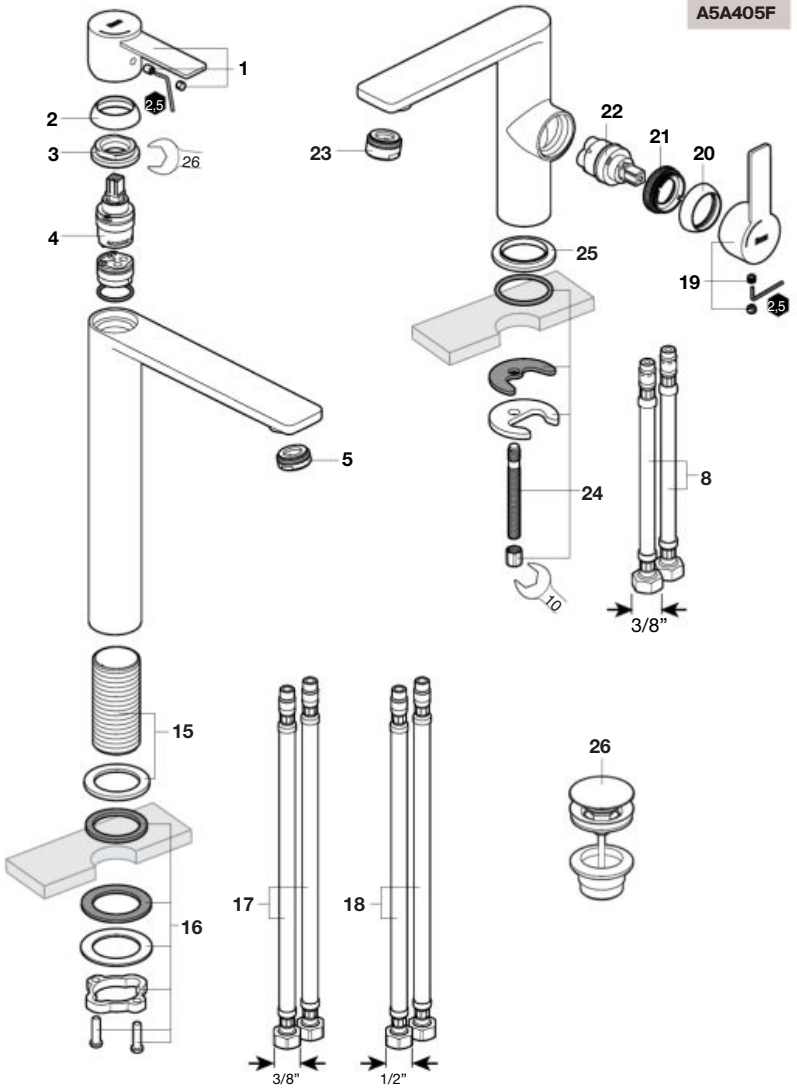

Los ultimos dígitos de la referencia de recambio indican el código del acabado:
Last digits of spare part reference indicate finish code:

00 Cromado / Chromed
NB Negro mate / Matt black
SM Acero inoxidable / Stainless steel
VA Oro cepillado / Brushed brass
B0 Blanco mate / Matt white

Códigos en (..): Sólo se muestra el precio del acabado cromado (**10**).
Codes (..): Only the price of the chrome finish is shown (**00**).

		€
1	**AG02557..R**	14,90
2	**AG02231..R**	3,97
3	**AG0222900R**	6,80
4	**AG0223200R**	11,60
5	**AG01964..R**	6,55
6	**AG02233..R**	5,97
7	**AG0223400R**	8,62
8	**A525020309**	15,00
9	**AG00962..R**	7,48
10	**AG00753..R**	28,80
11	**AG0125509R**	-
12	**AG02558..R**	15,00

		€
13	**AG00323..R**	15,90
14	**AG0223600R**	10,50
15	**AG02317..R**	8,15
16	**AG0225400R**	29,90
17	**AG0223700R**	12,50
18	**AG0223800R**	16,20
19	**AG02559..R**	21,80
20	**AG02560..R**	4,79
21	**AG0254700R**	5,77
22	**AG0245600R**	15,30
23	**AG00466..R**	11,40
24	**AG0246000R**	107,00

			€
25	**AG02552..R**		5,76
26	**A5054015..**		-
27	**AG02561..R**		15,10
28	**A525023507**		4,23
29	**AG0116400R**		6,18
30	**AG0110607R**		9,98
31	**A525005407**		7,44
32	**AG01168..R**	2 un	9,26
33	**AG0103908R**	2 un	17,30
34	**AG02131..R**	2 un	8,70
35	**A525005507**		7,44
36	**AG0036800R**		3,71

		€
37	**AG02416..R**	7,53
38	**AG01167..R**	4,36
39	**AG02128..R**	3,15
40	**AG0134907R**	6,77
41	**AG02305..R**	14,60
42	**AG02304..R**	20,00
43	**AG02562..R**	13,60
44	**AG0230700R**	2,68
45	**AG0230300R**	10,80

Targa-N

Grifería para ducha / Shower faucet

A5A215F

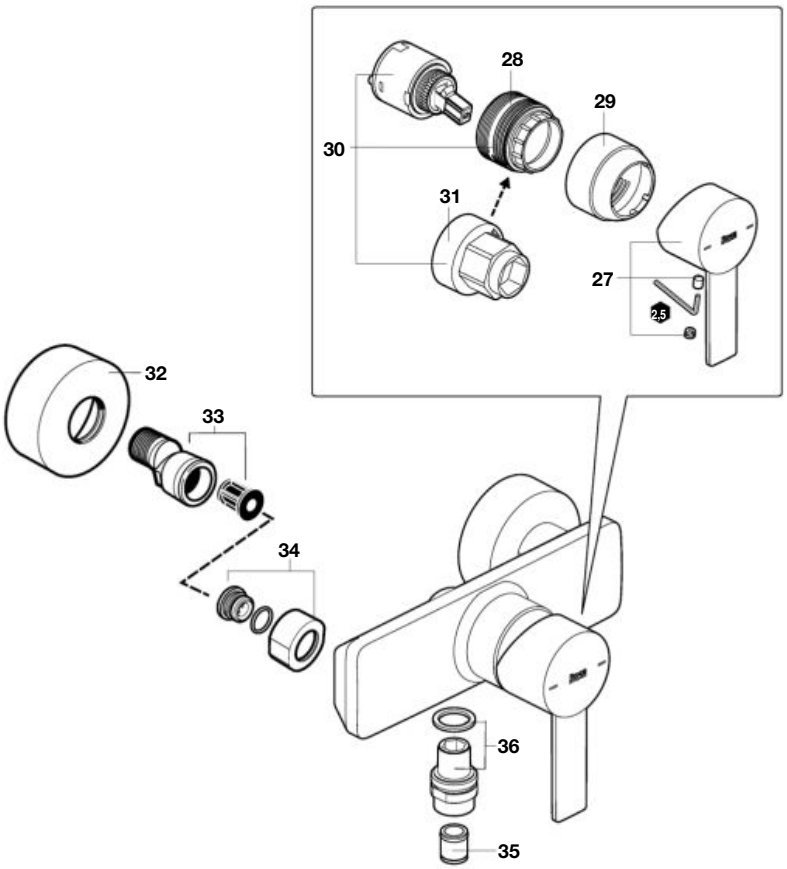

Los ultimos dígitos de la referencia de recambio indican el código del acabado:
Last digits of spare part reference indicate finish code:

00 Cromado / Chromed
NB Negro mate / Matt black
SM Acero inoxidable / Stainless steel
VA Oro cepillado / Brushed brass
B0 Blanco mate / Matt white

Códigos en (..): Sólo se muestra el precio del acabado cromado (**10**).
Codes (..): Only the price of the chrome finish is shown (**00**).

			€
1	**AG02557..R**		14,90
2	**AG02231..R**		3,97
3	**AG0222900R**		6,80
4	**AG0223200R**		11,60
5	**AG01964..R**		6,55
6	**AG02233..R**		5,97
7	**AG0223400R**		8,62
8	**A525020309**		15,00
9	**AG00962..R**		7,48
10	**AG00753..R**		28,80
11	**AG0125509R**		-
12	**AG02558..R**		15,00
13	**AG00323..R**		15,90
14	**AG0223600R**		10,50
15	**AG02317..R**		8,15
16	**AG0225400R**		29,90
17	**AG0223700R**		12,50
18	**AG0223800R**		16,20
19	**AG02559..R**		21,80
20	**AG02560..R**		4,79
21	**AG0254700R**		5,77
22	**AG0245600R**		15,30
23	**AG00466..R**		11,40
24	**AG0246000R**		107,00
25	**AG02552..R**		5,76
26	**A5054015..**		-
27	**AG02561..R**		15,10
28	**A525023507**		4,23
29	**AG0116400R**		6,18
30	**AG0110607R**		9,98
31	**A525005407**		7,44
32	**AG01168..R**	2 un	9,26
33	**AG0103908R**	2 un	17,30
34	**AG02131..R**	2 un	8,70
35	**A525005507**		7,44
36	**AG0036800R**		3,71
37	**AG02416..R**		7,53
38	**AG01167..R**		4,36
39	**AG02128..R**		3,15
40	**AG0134907R**		6,77
41	**AG02305..R**		14,60
42	**AG02304..R**		20,00
43	**AG02562..R**		13,60
44	**AG0230700R**		2,68
45	**AG0230300R**		10,80

Targa-N

Grifería para baño y ducha / Bath and shower faucet

A5A025F

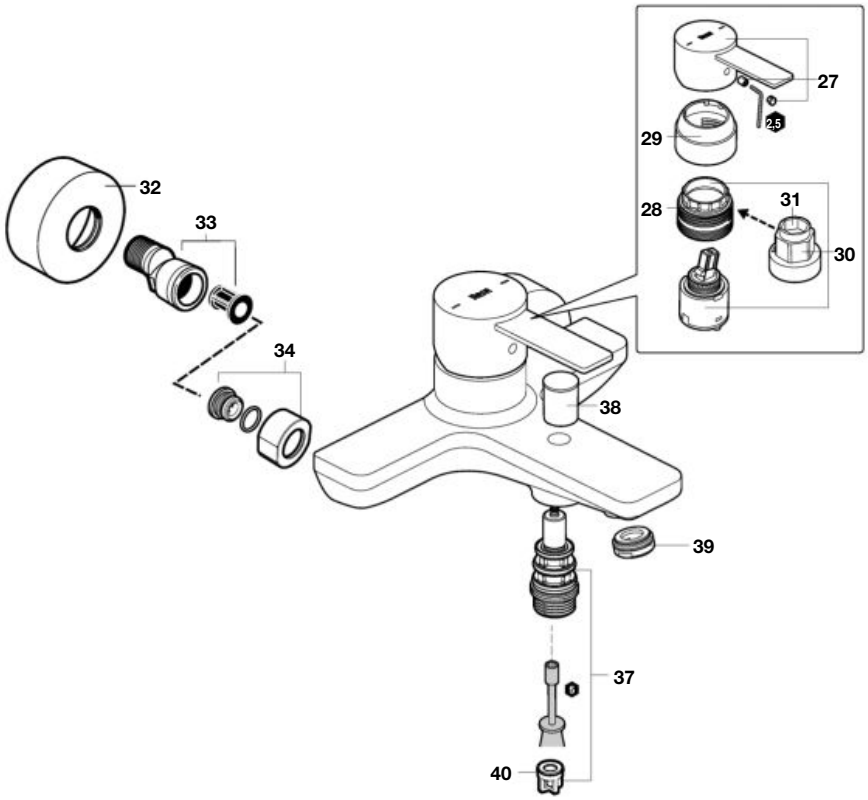

Los ultimos dígitos de la referencia de recambio indican el código del acabado:
Last digits of spare part reference indicate finish code:

00 Cromado / Chromed
NB Negro mate / Matt black
SM Acero inoxidable / Stainless steel
VA Oro cepillado / Brushed brass
B0 Blanco mate / Matt white

Códigos en (..): Sólo se muestra el precio del acabado cromado (**10**).
Codes (..): Only the price of the chrome finish is shown (**00**).

			€
1	**AG02557..R**		14,90
2	**AG02231..R**		3,97
3	**AG0222900R**		6,80
4	**AG0223200R**		11,60
5	**AG01964..R**		6,55
6	**AG02233..R**		5,97
7	**AG0223400R**		8,62
8	**A525020309**		15,00
9	**AG00962..R**		7,48
10	**AG00753..R**		28,80
11	**AG0125509R**		-
12	**AG02558..R**		15,00
13	**AG00323..R**		15,90
14	**AG0223600R**		10,50
15	**AG02317..R**		8,15
16	**AG0225400R**		29,90
17	**AG0223700R**		12,50
18	**AG0223800R**		16,20
19	**AG02559..R**		21,80
20	**AG02560..R**		4,79
21	**AG0254700R**		5,77
22	**AG0245600R**		15,30
23	**AG00466..R**		11,40
24	**AG0246000R**		107,00
25	**AG02552..R**		5,76
26	**A5054015..**		-
27	**AG02561..R**		15,10
28	**A525023507**		4,23
29	**AG0116400R**		6,18
30	**AG0110607R**		9,98
31	**A525005407**		7,44
32	**AG01168..R**	2 un	9,26
33	**AG0103908R**	2 un	17,30
34	**AG02131..R**	2 un	8,70
35	**A525005507**		7,44
36	**AG0036800R**		3,71
37	**AG02416..R**		7,53
38	**AG01167..R**		4,36
39	**AG02128..R**		3,15
40	**AG0134907R**		6,77
41	**AG02305..R**		14,60
42	**AG02304..R**		20,00
43	**AG02562..R**		13,60
44	**AG0230700R**		2,68
45	**AG0230300R**		10,80

Targa-N

Grifería para baño y ducha / Bath and shower faucet

A5A355F + **A5E3503..0**

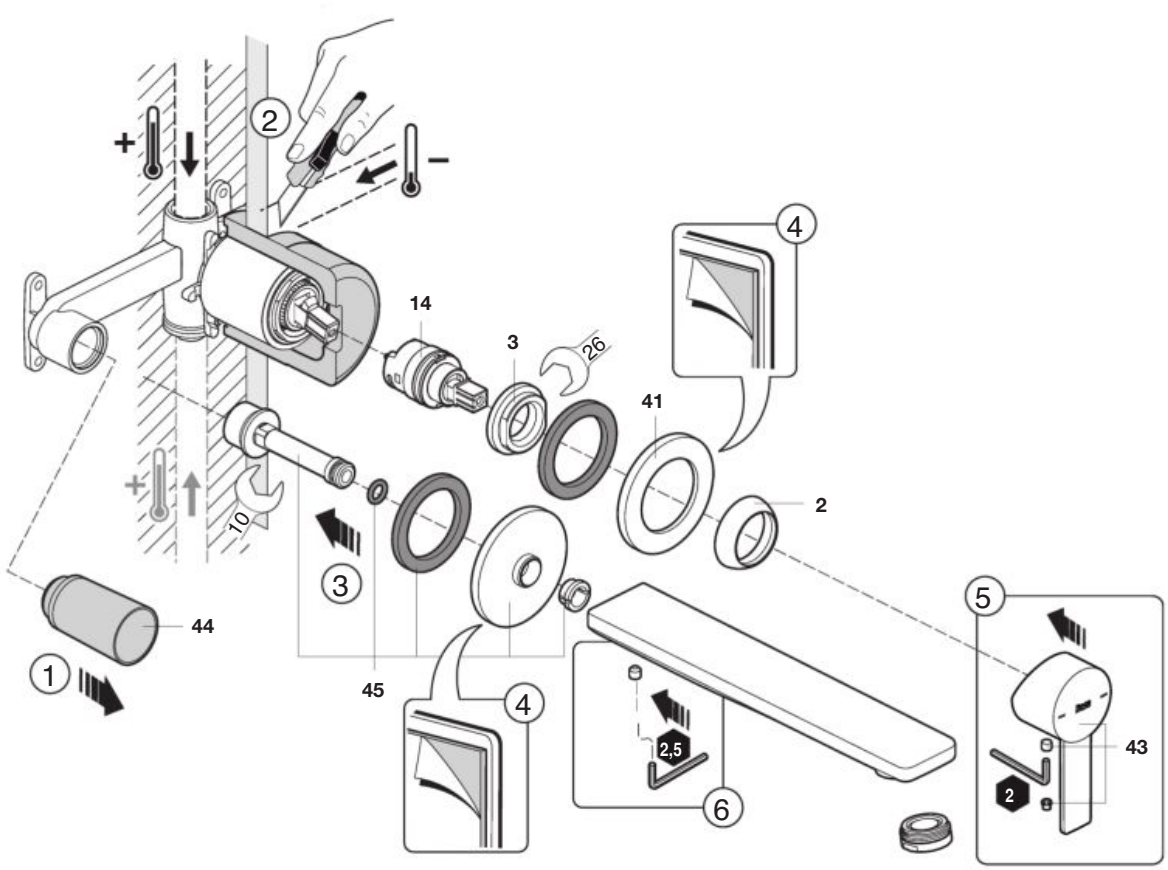

Los ultimos dígitos de la referencia de recambio indican el código del acabado:
Last digits of spare part reference indicate finish code:

00 Cromado / Chromed
NB Negro mate / Matt black
SM Acero inoxidable / Stainless steel
VA Oro cepillado / Brushed brass
B0 Blanco mate / Matt white

Códigos en (..): Sólo se muestra el precio del acabado cromado (**10**).
Codes (..): Only the price of the chrome finish is shown (**00**).

			€
1	**AG02557..R**		14,90
2	**AG02231..R**		3,97
3	**AG0222900R**		6,80
4	**AG0223200R**		11,60
5	**AG01964..R**		6,55
6	**AG02233..R**		5,97
7	**AG0223400R**		8,62
8	**A525020309**		15,00
9	**AG00962..R**		7,48
10	**AG00753..R**		28,80
11	**AG0125509R**		-
12	**AG02558..R**		15,00
13	**AG00323..R**		15,90
14	**AG0223600R**		10,50
15	**AG02317..R**		8,15
16	**AG0225400R**		29,90
17	**AG0223700R**		12,50
18	**AG0223800R**		16,20
19	**AG02559..R**		21,80
20	**AG02560..R**		4,79
21	**AG0254700R**		5,77
22	**AG0245600R**		15,30
23	**AG00466..R**		11,40
24	**AG0246000R**		107,00
25	**AG02552..R**		5,76
26	**A5054015..**		-
27	**AG02561..R**		15,10
28	**A525023507**		4,23
29	**AG0116400R**		6,18
30	**AG0110607R**		9,98
31	**A525005407**		7,44
32	**AG01168..R**	2 un	9,26
33	**AG0103908R**	2 un	17,30
34	**AG02131..R**	2 un	8,70
35	**A525005507**		7,44
36	**AG0036800R**		3,71
37	**AG02416..R**		7,53
38	**AG01167..R**		4,36
39	**AG02128..R**		3,15
40	**AG0134907R**		6,77
41	**AG02305..R**		14,60
42	**AG02304..R**		20,00
43	**AG02562..R**		13,60
44	**AG0230700R**		2,68
45	**AG0230300R**		10,80

Targa-N

Grifería para baño y ducha / Bath and shower faucet

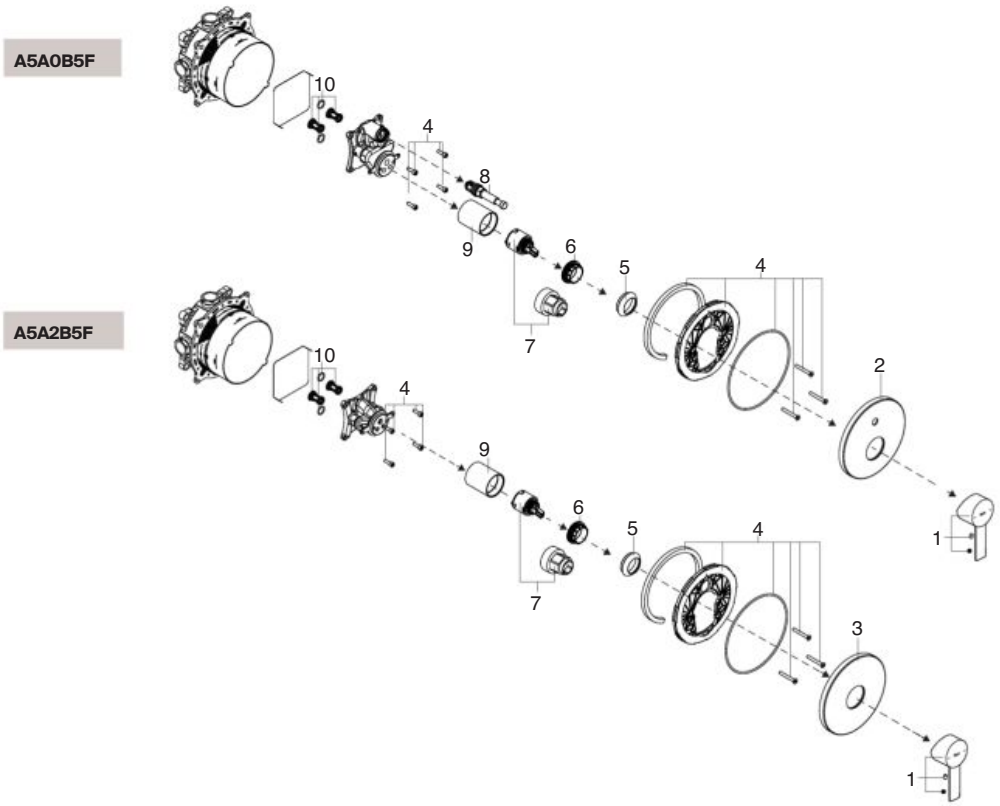

Los ultimos dígitos de la referencia de recambio indican el código del acabado:
Last digits of spare part reference indicate finish code:

00 Cromado / Chromed
NB Negro mate / Matt black
SM Acero inoxidable / Stainless steel
VA Oro cepillado / Brushed brass
B0 Blanco mate / Matt white

Códigos en (..): Sólo se muestra el precio del acabado cromado (**10**).
Codes (..): Only the price of the chrome finish is shown (**00**).

		€
1	**AG02561..R**	15,10
2	**AG01213..R**	21,10
3	**AG01212..R**	19,90
4	**AG0120900R**	23,50
5	**AG00853..R**	18,00
6	**A525023507**	4,23
7	**AG0110607R**	9,98
8	**A525006500** Cromado/ Chromed	23,30
	AG02186..R	15,50
9	**AG02189..R**	10,90
10	**AG0121000R**	21,70

Targa

Grifería para lavabo y bidé / Basin and bidet faucet

A5A3060C00
A5A3160C00
A5A3260C00

A5A6060C00
A5A6160C00

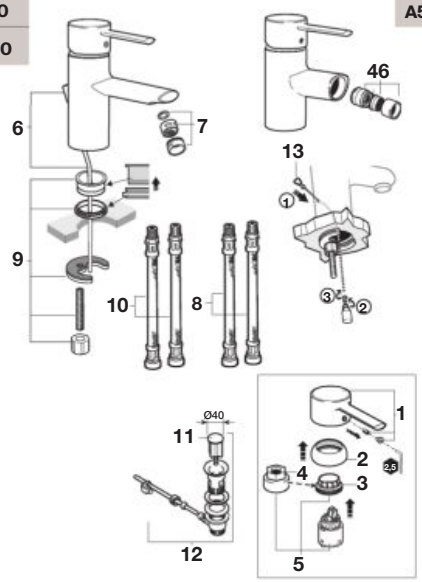

Grifería de caño alto para lavabo
Extended height basin faucet

A5A3460C00

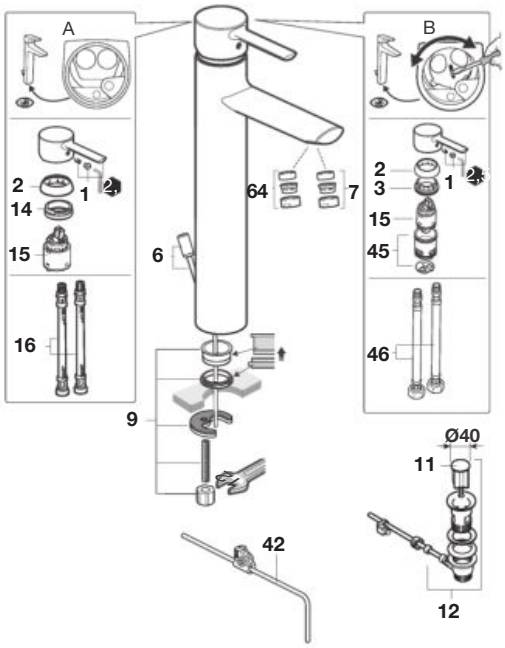

Grifería para lavabo / Basin faucet

A5A4060C00

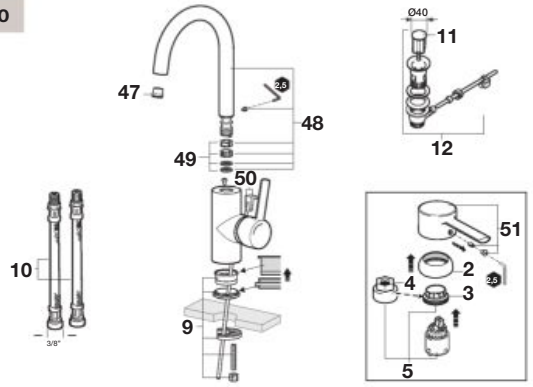

			€
1	**AG0001200R**		27,10
2	**AG0085300R**		18,00
3	**A525023507**		4,23
4	**A525005407**		7,44
5	**AG0077807R**		42,10
6	**AG0002100R**		8,45
7	**AG0099100R**	2 L/min	14,70
	A525004700	Clase A	7,44
8	**AG0092409R**		8,86
9	**A525004403**		7,92
10	**A525020309**		15,00
11	**AG0096200R**		7,48
12	**AG0075300R**		28,80
13	**A525004600**		8,20
14	**A525027803**		32,40

			€
15	**AG0141207R**		19,20
16	**A525020409**		18,60
18	**AG0003700R**		13,70
19	**A525005308**		13,50
20	**A525026200**		34,90
21	**A525023200**		11,90
22	**A525087300**		18,90
23	**A525009800**		27,10
24	**AG0112307R**	8 L/min	14,20
	A525005507	12 L/min	7,44
25	**A525006600**	Clase A	7,44
	AG0098800R	3,7 L/min	11,00
26	**AG0001600R**		67,40
27	**AG0001300R**		24,20
28	**AG0001503R**		9,17

		€
29	**AG0003800R**	58,80
30	**AG0031700R**	26,70
31	**AG0001800R**	215,00
32	**AG0001703R**	40,50
33	**AG0003903R**	22,60
34	**AG0009709R**	9,39
35	**AG0001907R**	11,00
36	**A525006500**	23,30
37	**A525002700**	47,20
38	**A525002800**	37,60
39	**A525005800**	7,44
40	**AG0116800R**	9,26
41	**AG0055800R**	14,40
42	**AG0033300R**	30,00
43	**AG0119708R**	16,40

		€
44	**AG0143800R**	-
45	**AG0096307R**	6,45
46	**A525089100**	32,90
47	**AG0122107R**	10,20
48	**AG0122000R**	60,90
49	**AG0017707R**	5,83
50	**A525020600**	8,88
51	**AG0122200R**	22,40
52	**AG0109607R**	10,20
53	**AG0109500R**	53,80
54	**AG0101207R**	2,35
55	**AG0109700R**	29,90
56	**AG0026307R**	5,83
57	**AG0109800R**	75,00
58	**AG0109907R**	4,91

Targa

Grifería para baño y ducha / Bath and shower faucet

A5A0160
A5A1760
A5A0360

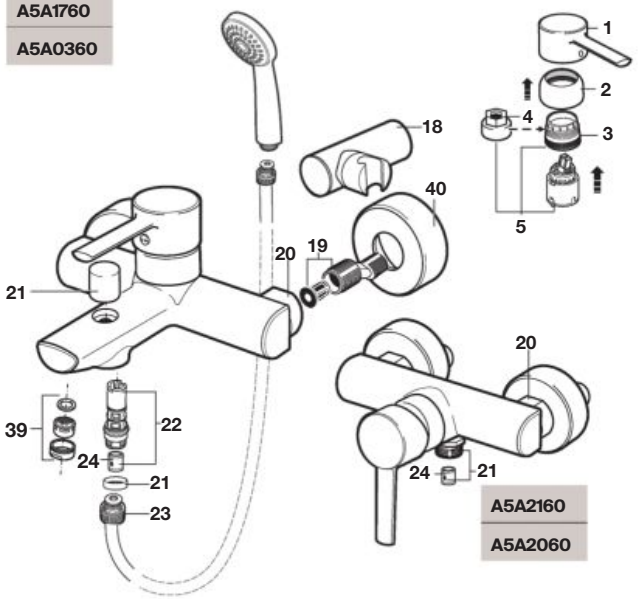

Grifería empotrable para baño y ducha
Wall-mounted bath and shower faucet

A5A0660C00

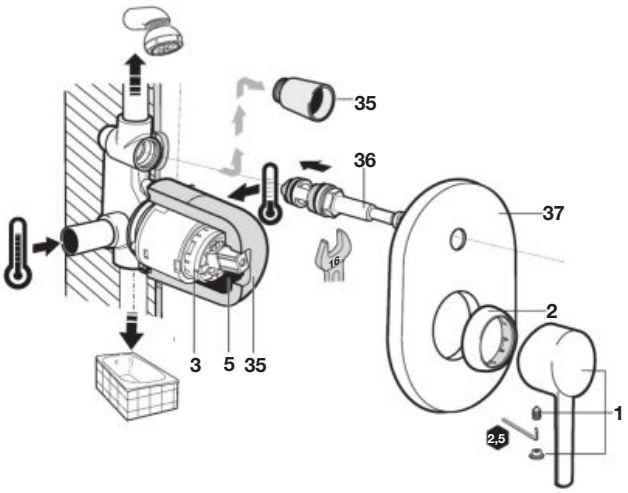

Grifería para baño y ducha / Bath and shower faucet

A5A2260C00

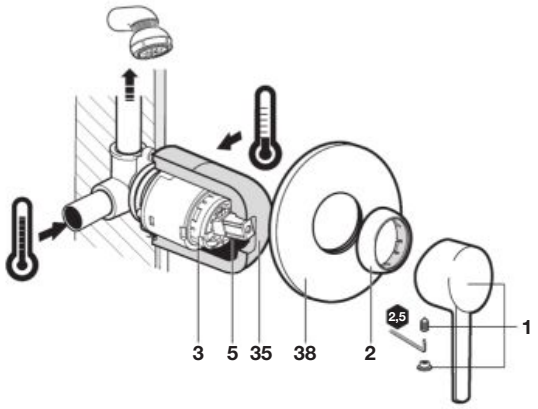

			€
1	**AG0001200R**		27,10
2	**AG0085300R**		18,00
3	**A525023507**		4,23
4	**A525005407**		7,44
5	**AG0077807R**		42,10
6	**AG0002100R**		8,45
7	**AG0099100R**	2L/min	14,70
	A525004700	Clase A	7,44
8	**AG0092409R**		8,86
9	**A525004403**		7,92
10	**A525020309**		15,00
11	**AG0096200R**		7,48
12	**AG0075300R**		28,80
13	**A525004600**		8,20
14	**A525027803**		32,40

			€
15	**AG0141207R**		19,20
16	**A525020409**		18,60
18	**AG0003700R**		13,70
19	**A525005308**		13,50
20	**A525026200**		34,90
21	**A525023200**		11,90
22	**A525087300**		18,90
23	**A525009800**		27,10
24	**AG0112307R**	8L/min	14,20
	A525005507	12L/min	7,44
25	**A525006600**	Clase A	7,44
	AG0098800R	3,7L/min	11,00
26	**AG0001600R**		67,40
27	**AG0001300R**		24,20
28	**AG0001503R**		9,17

		€
29	**AG0003800R**	58,80
30	**AG0031700R**	26,70
31	**AG0001800R**	215,00
32	**AG0001703R**	40,50
33	**AG0003903R**	22,60
34	**AG0009709R**	9,39
35	**AG0001907R**	11,00
36	**A525006500**	23,30
37	**A525002700**	47,20
38	**A525002800**	37,60
39	**A525005800**	7,44
40	**AG0116800R**	9,26
41	**AG0055800R**	14,40
42	**AG0033300R**	30,00
43	**AG0119708R**	16,40

		€
44	**AG0143800R**	-
45	**AG0096307R**	6,45
46	**A525089100**	32,90
47	**AG0122107R**	10,20
48	**AG0122000R**	60,90
49	**AG0017707R**	5,83
50	**A525020600**	8,88
51	**AG0122200R**	22,40
52	**AG0109607R**	10,20
53	**AG0109500R**	53,80
54	**AG0101207R**	2,35
55	**AG0109700R**	29,90
56	**AG0026307R**	5,83
57	**AG0109800R**	75,00
58	**AG0109907R**	4,91

Targa

Grifería termostática para baño y ducha
Wall-mounted bath and shower faucet

A5A1160

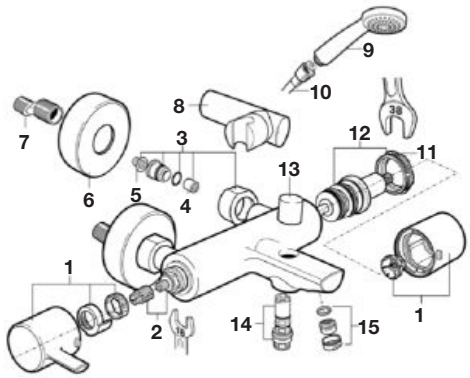

A5A1360

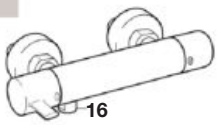

Grifería termostática empotrable para baño y ducha
Wall-mounted bath or shower thermostatic faucet

A5A2860

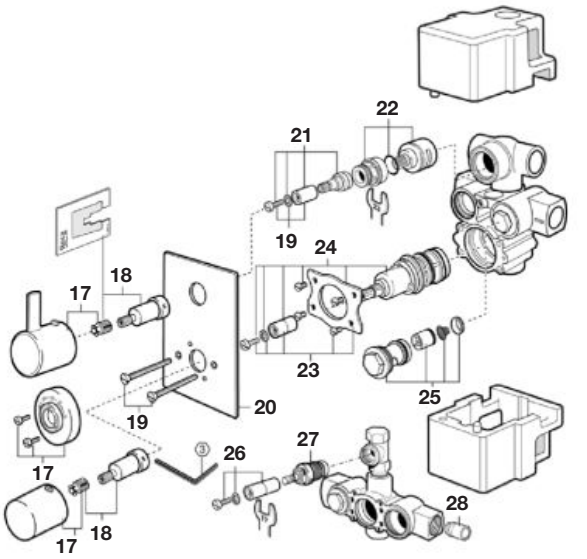

A5A2960

		€
1	**AG0021300R**	33,60
2	**A525092709**	73,20
3	**AG0001400R**	40,60
4	**AG0021407R**	16,20
5	**A525027207**	3,88
6	**AG0087100R**	6,94

		€
7	**A525005308**	13,50
8	**AG0068500R**	27,30
9	**A5B9103C00**	-
10	**A525009800**	27,10
11	**AG0020703R**	22,60
12	**A525028003**	81,70

		€
13	**A525023200**	11,90
14	**A525087300**	18,90
15	**AG0029400R**	2,74
16	**A525024200**	9,74
17	**AG0021200R**	N.D.
18	**A525024303**	16,50

		€
19	**AG0028703R**	16,40
20	**AG0020800R**	192,00
21	**AG0021003R**	36,40
22	**A525012503**	33,20
23	**AG0021103R**	18,30
24	**A525017303**	125,00

		€
25	**A525018003**	87,70
26	**AG0024803R**	9,32
27	**AG0020903R**	51,50
28	**A525024803**	38,30

Targa

Grifería para cocina / Kitchen faucet

A5A8460C00

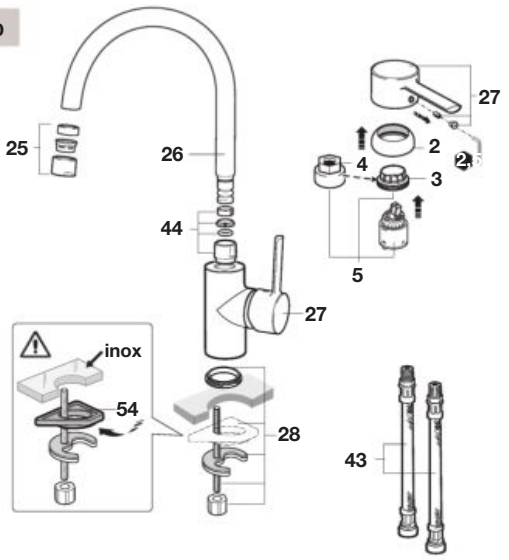

Grifería para cocina / Kitchen faucet

A5A8360C00

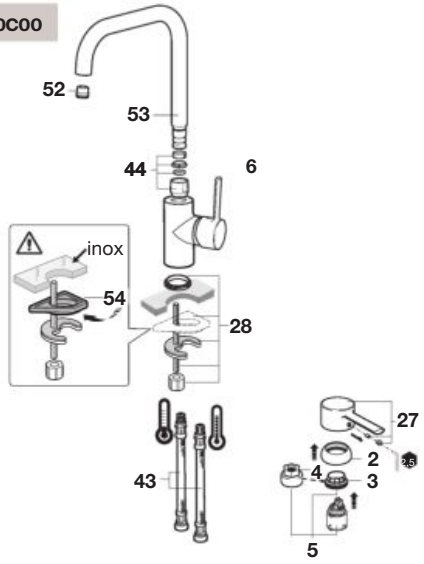

Grifería para cocina / Kitchen faucet

A5A8160C00

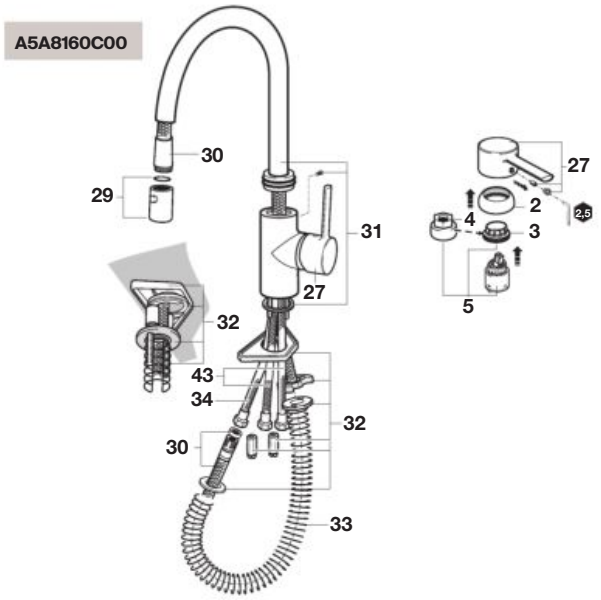

Grifería para cocina / Kitchen faucet

A5A8560C00

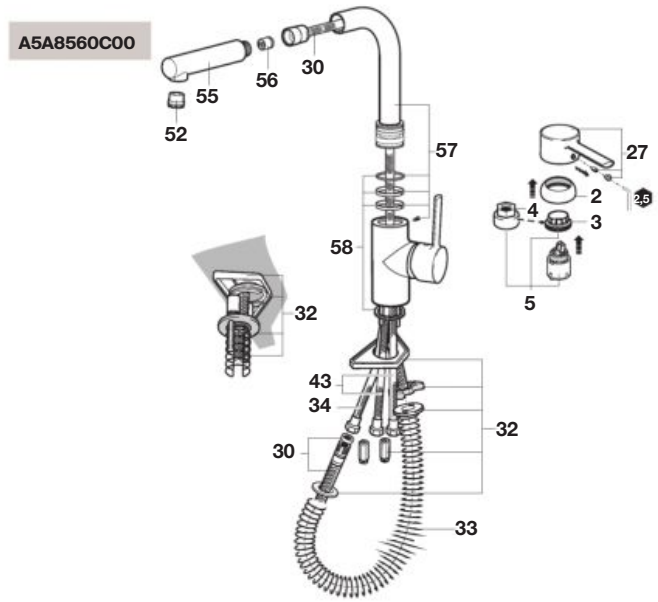

			€
1	**AG0001200R**		27,10
2	**AG0085300R**		18,00
3	**A525023507**		4,23
4	**A525005407**		7,44
5	**AG0077807R**		42,10
6	**AG0002100R**		8,45
7	**AG0099100R**	5L/min	14,70
	A525004700	Clase A	7,44
8	**AG0092409R**		8,86
9	**A525004403**		7,92
10	**A525020309**		15,00
11	**AG0096200R**		7,48
12	**AG0075300R**		28,80
13	**A525004600**		8,20
14	**A525027803**		32,40

			€
15	**AG0141207R**		19,20
16	**A525020409**		18,60
18	**AG0003700R**		13,70
19	**A525005308**		13,50
20	**A525026200**		34,90
21	**A525023200**		11,90
22	**A525087300**		18,90
23	**A525009800**		27,10
24	**AG0112307R**	8L/min	14,20
	A525005507	12L/min	7,44
25	**A525006600**	Clase A	7,44
	AG0098800R	3,7L/min	11,00
26	**AG0001600R**		67,40
27	**AG0001300R**		24,20
28	**AG0001503R**		9,17

		€
29	**AG0003800R**	58,80
30	**AG0031700R**	26,70
31	**AG0001800R**	215,00
32	**AG0001703R**	40,50
33	**AG0003903R**	22,60
34	**AG0009709R**	9,39
35	**AG0001907R**	11,00
36	**A525006500**	23,30
37	**A525002700**	47,20
38	**A525002800**	37,60
39	**A525005800**	7,44
40	**AG0116800R**	9,26
41	**AG0055800R**	14,40
42	**AG0033300R**	30,00
43	**AG0119708R**	16,40

		€
44	**AG0143800R**	-
45	**AG0096307R**	6,45
46	**A525089100**	32,90
47	**AG0122107R**	10,20
48	**AG0122000R**	60,90
49	**AG0017707R**	5,83
50	**A525020600**	8,88
51	**AG0122200R**	22,40
52	**AG0109607R**	10,20
53	**AG0109500R**	53,80
54	**AG0101207R**	2,35
55	**AG0109700R**	29,90
56	**AG0026307R**	5,83
57	**AG0109800R**	75,00
58	**AG0109907R**	4,91

Atlas

Grifería para lavabo y bidé / Basin and bidet faucet

A5A3090
A5A3190
A5A3290

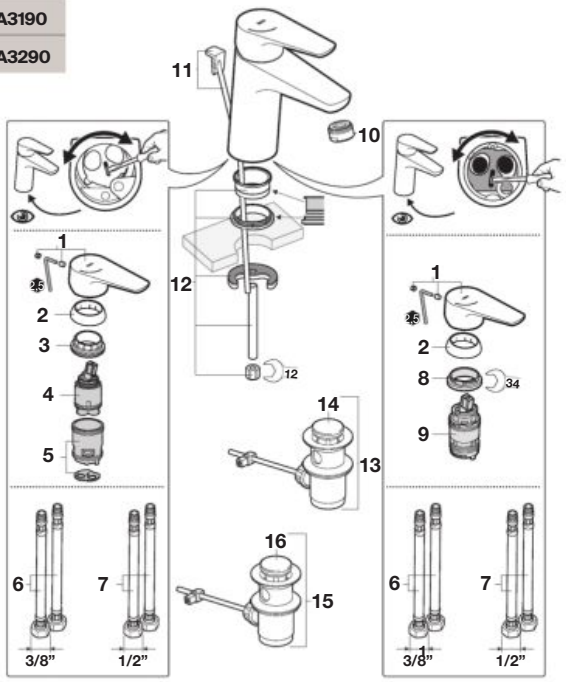

A5A6090
A5A6190

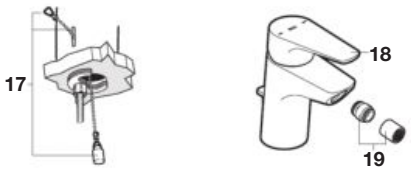

Grifería para baño y ducha / Bath and shower faucet

A5A0190
A5A0290
A5A0390

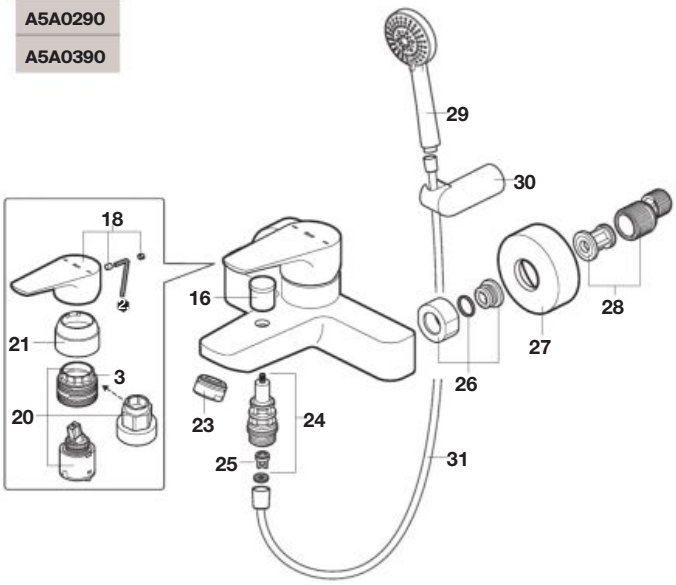

A5A2A90
A5A2090
A5A2190

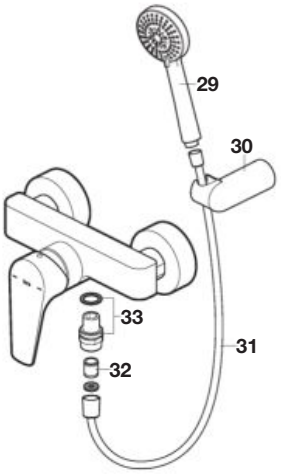

			€
1	**AG0116100R**		38,90
2	**AG0085300R**		18,00
3	**A525023507**		4,23
4	**AG0141207R**		19,20
5	**AG0096307R**		6,45
6	**AG0096409R**	D10X3/8"H L-420	13,90
	AG0096509R	D10x3/8"H L-600	16,40
7	**AG0125909R**	D10x1/2"F L-600	18,30
	AG0126009R	D10x1/2"F L-470	17,00
8	**AG0163900R**		35,80
9	**AG0159300R**		12,50

			€
10	**AG0046600R**	5 l/min	11,40
	AG0129000R	1,7 l/min	9,26
11	**A525020600**		8,88
12	**A525004403**	M8X85	7,92
	A525030303	M8X247	20,80
13	**AG0075300R**		28,80
14	**AG0096200R**		7,48
15	**A525021200**		31,20
16	**AG0116700R**		4,36
17	**A525004600**		8,20
18	**AG0116300R**		26,70
19	**AG0032300R**		15,90
20	**AG0110607R**		9,98

			€
21	**AG0116400R**		6,18
22	**AG0116700R**		4,36
23	**A525003600**		4,85
24	**AG0116500R**		13,90
25	**AG0116600R**		5,08
26	**A525005200**		15,30
27	**AG0116800R**	2 un	9,26
28	**AG0103908R**		17,30
29	**A5B1103C00**		-
30	**AG0003700R**		13,70
31	**A525009800**		27,10
32	**A525005507**		7,44
33	**AG0036800R**		3,71

		€
34	**AG0099007R**	12,90
35	**AG0033300R**	30,00
37	**AG0117207R**	2,58
38	**AG0117100R**	47,30
39	**AG0117400R**	70,30
40	**AG0117300R**	4,33
41	**AG0119500R**	19,40
42	**AG0001907R**	11,00
43	**A525006500**	23,30
44	**AG0119600R**	20,60
45	**AG0142300R**	10,60
46	**AG0142100R**	3,20

Atlas

Grifería para lavabo / Basin faucet

A5A3390
A5A3990

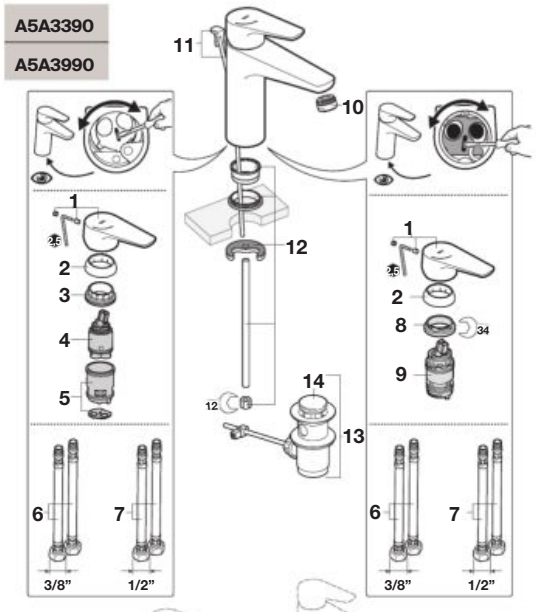

A5A3D90



A5A3490
A5A3790



Grifería empotrable para baño y ducha
Wall-mounted bath and shower faucet

A5252206 + **A5A3590**

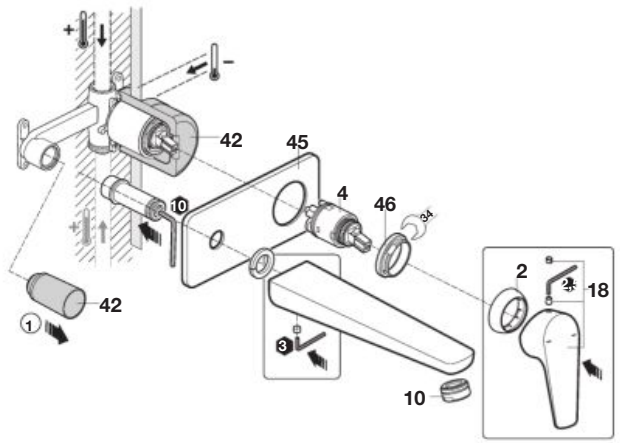

Grifería empotrable para ducha
Wall-mounted shower faucet

A5A2290

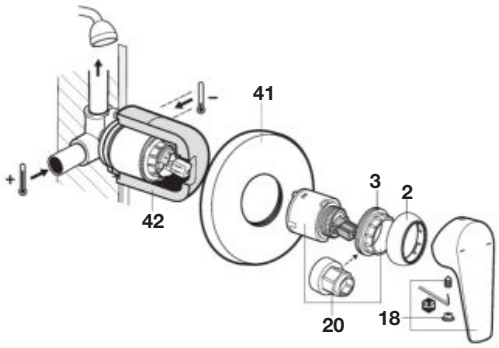

Grifería empotrable para baño y ducha
Wall-mounted bath and shower faucet

A5A0690

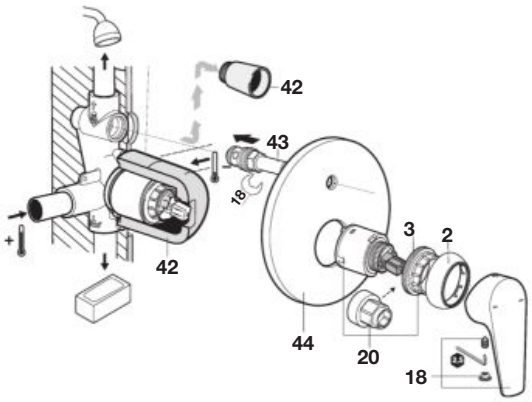

			€
1	**AG0116100R**		38,90
2	**AG0085300R**		18,00
3	**A525023507**		4,23
4	**AG0141207R**		19,20
5	**AG0096307R**		6,45
6	**AG0096409R**	D10x3/8"H L-420	13,90
	AG0096509R	D10x3/8"H L-600	16,40
7	**AG0125909R**	D10x1/2"F L-600	18,30
	AG0126009R	D10x1/2"F L-470	17,00
8	**AG0163900R**		35,80
9	**AG0159300R**		12,50

			€
10	**AG0046600R**	5 l/min	11,40
	AG0129000R	1,7 l/min	9,26
11	**A525020600**		8,88
12	**A525004403**	M8X85	7,92
	A525030303	M8X247	20,80
13	**AG0075300R**		28,80
14	**AG0096200R**		7,48
15	**A525021200**		31,20
16	**AG0116700R**		4,36
17	**A525004600**		8,20
18	**AG0116300R**		26,70
19	**AG0032300R**		15,90
20	**AG0110607R**		9,98

		€
21	**AG0116400R**	6,18
22	**AG0116700R**	4,36
23	**A525003600**	4,85
24	**AG0116500R**	13,90
25	**AG0116600R**	5,08
26	**A525005200**	15,30
27	**AG0116800R**	9,26
28	**AG0103908R**	17,30
29	**A5B1103C00**	-
30	**AG0003700R**	13,70
31	**A525009800**	27,10
32	**A525005507**	7,44
33	**AG0036800R**	3,71

		€
34	**AG0099007R**	12,90
35	**AG0033300R**	30,00
37	**AG0117207R**	2,58
38	**AG0117100R**	47,30
39	**AG0117400R**	70,30
40	**AG0117300R**	4,33
41	**AG0119500R**	19,40
42	**AG0001907R**	11,00
43	**A525006500**	23,30
44	**AG0119600R**	20,60
45	**AG0142300R**	10,60
46	**AG0142100R**	3,20

Atlas

Grifería monomando baño ducha repisa / Deck-mounted single-lever bath shower faucet

A5A9890C00

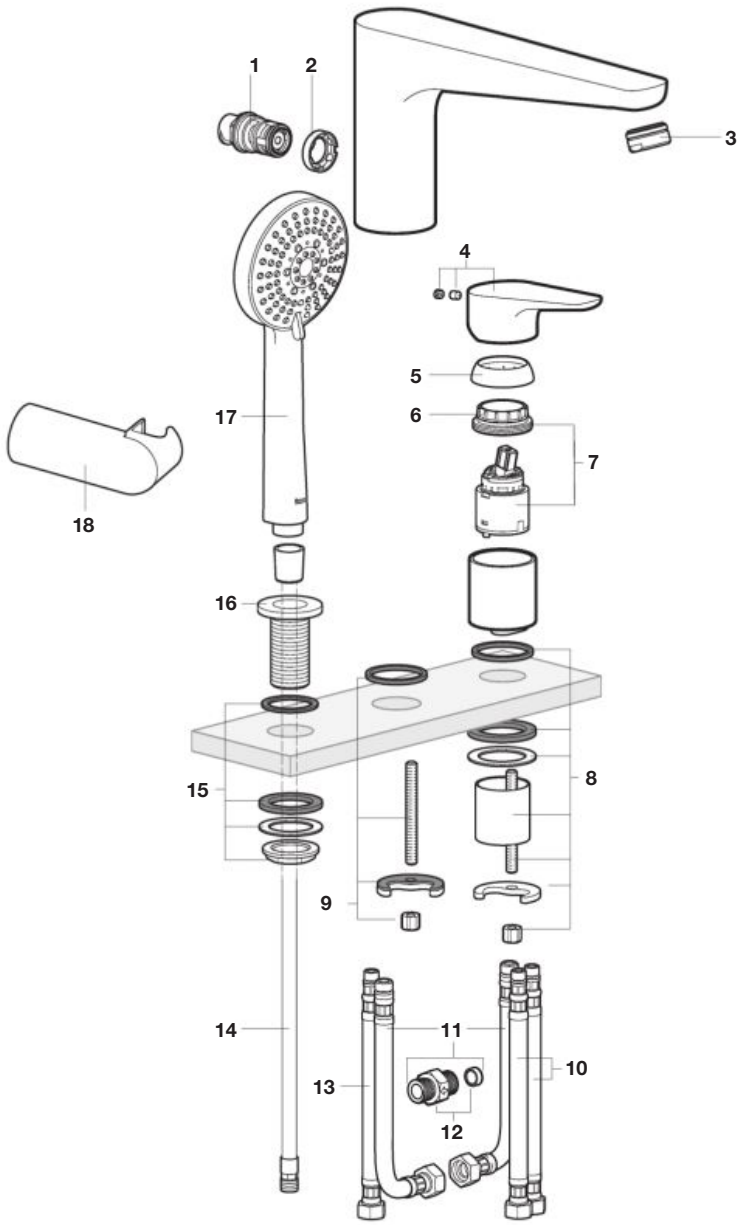

		€
1	**A525023600**	35,50
2	**A525024200**	9,74
3	**AG0029400R**	2,74
4	**AG0116300R**	26,70
5	**AG0085300R**	18,00

		€
6	**A525023507**	4,23
7	**AG0077807R**	42,10
8	**AG0048403R**	15,60
9	**A525006903**	8,56

			€
10	**A525020309**	G 3/8"	15,00
	AG0092409R	G 1/2"	8,86
11	**AG0010603R**		47,00
12	**AG0007503R**		38,20
13	**A525027609**		24,20

		€
14	**AB0030900R**	37,00
15	**AG0048303R**	25,20
16	**AG0154400R**	14,90
17	**A5B8113C00**	-
18	**AG0003700R**	13,70

Atlas

Columna monomando para bañera / Bath single-lever column

A5A2790C00

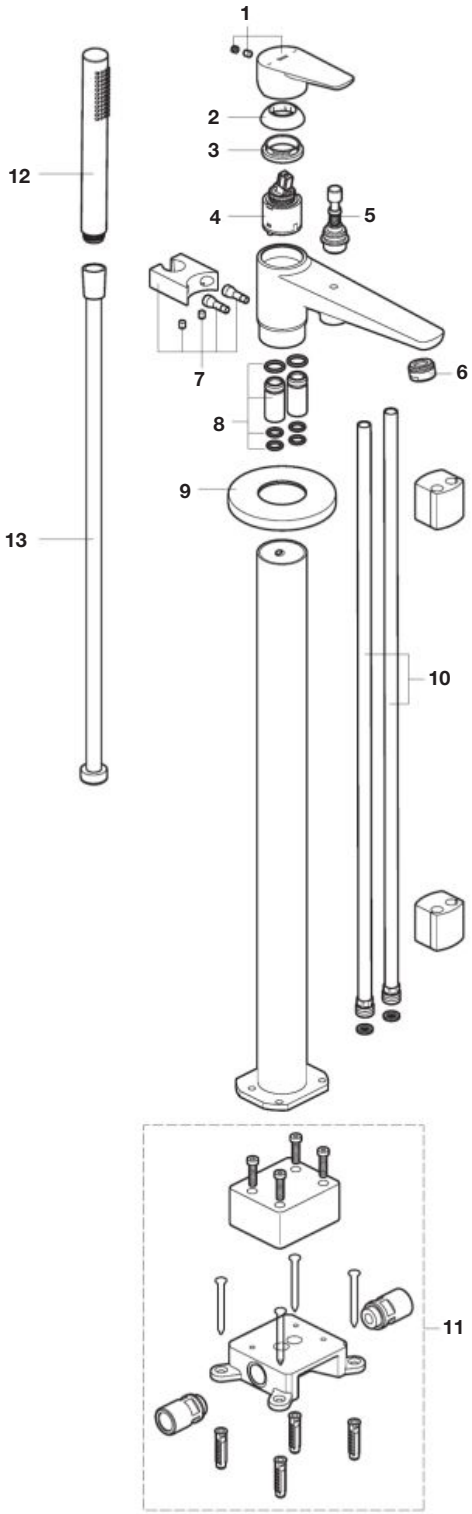

		€
1	**AG0116300R**	26,70
2	**AG0085300R**	18,00
3	**AG0163900R**	35,80
4	**AG0110607R**	9,98

		€
5	**AG0131800R**	45,80
6	**AG0212800R**	3,15
7	**AG0228100R**	39,10
8	**AG0128103R**	44,70

			€
9	**AG0228200R**		27,40
10	**AG0128400R**	G 3/8"	114,00
11	**AG0128503R**		289,00
12	**A5B9B61C00**		-

		€
13	**A525009900**	52,60

Malva

Grifería para lavabo / Basin faucet

A5A303B
A5A323B
A5A313B

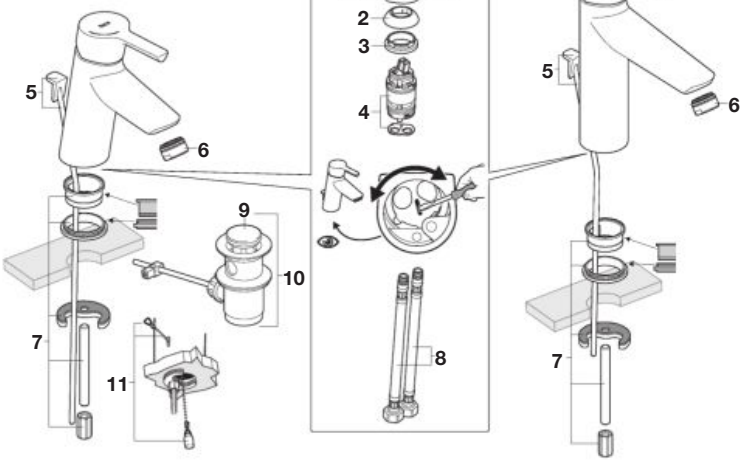

A5A333B

Griferia para bidé / Bidet faucet

A5A603B
A5A613B

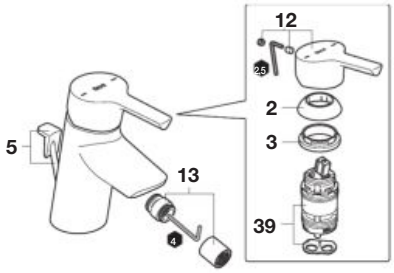

Grifería para lavabo / Basin faucet

A5A343B
A5A373B

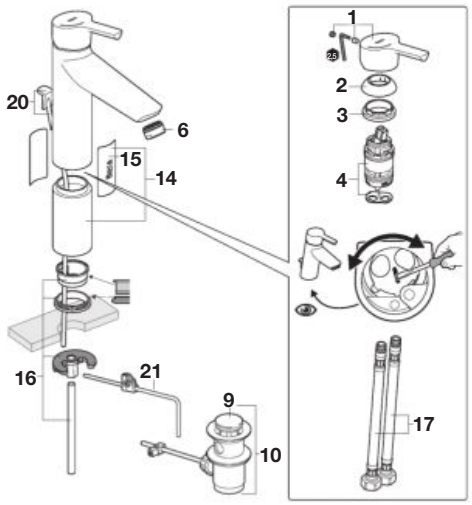

		€
1	AG0163400R	22,30
2	AG0032100R	27,90
3	AG0163800R	5,20
4	AG0159300R	12,50
5	A525020600	8,88
6	AG0046600R	11,40
7	A525004403	7,92
8	AG0096409R	13,90

		€
9	AG0096200R	7,48
10	AG0075300R	28,80
11	A525004600	8,20
12	AG0163500R	22,30
13	AG0032300R	15,90
14	AG0136800R	51,70
15	AG0117207R	2,58
16	AG0136903R	9,95

		€
17	AG0096509R	16,40
20	AG0117300R	4,33
21	AG0033300R	30,00
22	AG0103908R	17,30
23	AG0116800R	9,26
24	A525005200	15,30
25	AG0116700R	4,36
26	A525003600	4,85

		€
27	AG0116500R	13,90
28	AG0116600R	5,08
29	A525027803	32,40
30	AG0110607R	9,98
31	AG0054107R	3,75
32	AG0164000R	8,17
33	AG0036800R	3,71
34	A525005507	7,44

		€
35	AG0119500R	19,40
36	AG0001907R	11,00
37	A525006500	23,30
38	AG0119600R	20,60
39	AG0163600R	12,40

Malva

Grifería para baño-ducha / Bath-shower faucet

A5A023B

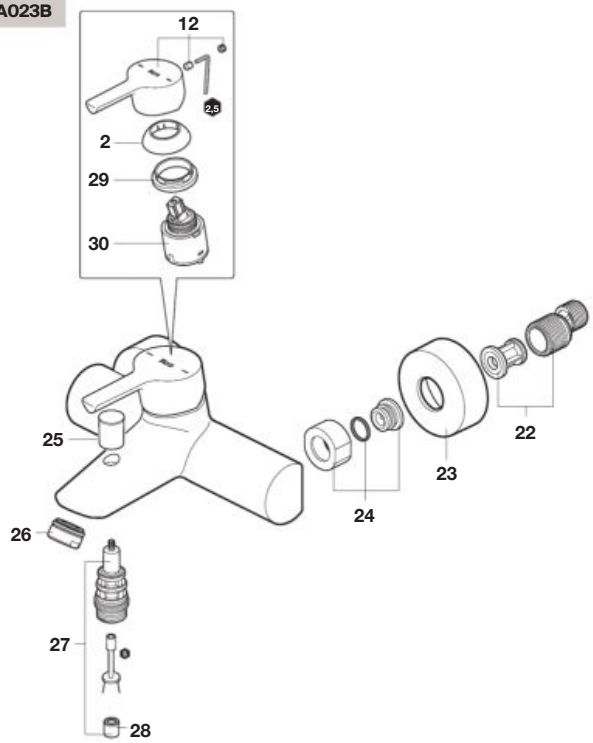

Griferia para ducha / Bath faucet

A5A213B

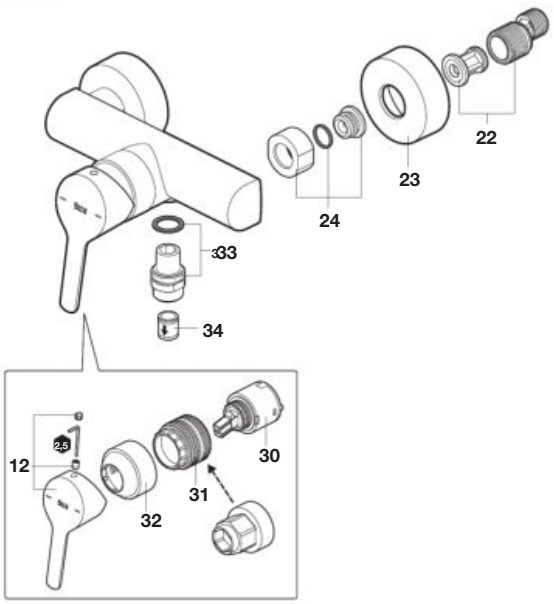

Grifería para baño-ducha / Bath-shower faucet

A5A063B

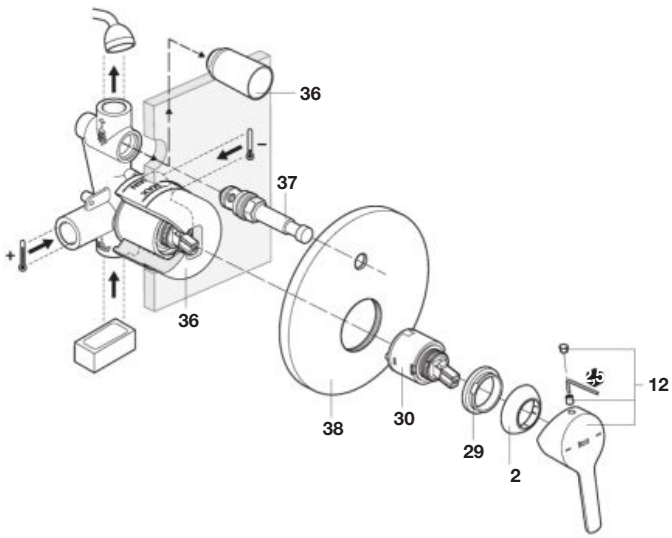

Griferia para ducha / Bath faucet

A5A223B

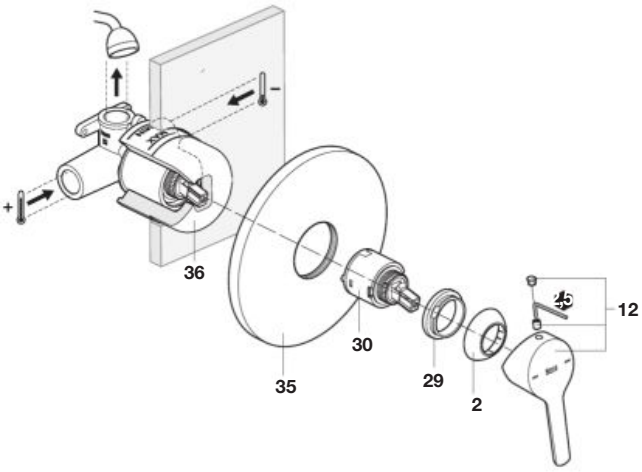

		€
1	**AG0163400R**	22,30
2	**AG0032100R**	27,90
3	**AG0163800R**	5,20
4	**AG0159300R**	12,50
5	**A525020600**	8,88
6	**AG0046600R**	11,40
7	**A525004403**	7,92
8	**AG0096409R**	13,90

		€
9	**AG0096200R**	7,48
10	**AG0075300R**	28,80
11	**A525004600**	8,20
12	**AG0163500R**	22,30
13	**AG0032300R**	15,90
14	**AG0136800R**	51,70
15	**AG0117207R**	2,58
16	**AG0136903R**	9,95

		€
17	**AG0096509R**	16,40
20	**AG0117300R**	4,33
21	**AG0033300R**	30,00
22	**AG0103908R**	17,30
23	**AG0116800R**	9,26
24	**A525005200**	15,30
25	**AG0116700R**	4,36
26	**A525003600**	4,85

		€
27	**AG0116500R**	13,90
28	**AG0116600R**	5,08
29	**A525027803**	32,40
30	**AG0110607R**	9,98
31	**AG0054107R**	3,75
32	**AG0164000R**	8,17
33	**AG0036800R**	3,71
34	**A525005507**	7,44

		€
35	**AG0119500R**	19,40
36	**AG0001907R**	11,00
37	**A525006500**	23,30
38	**AG0119600R**	20,60
39	**AG0163600R**	12,40

Monodin-N

Grifería para lavabo / Basin faucet

A5A328G..0

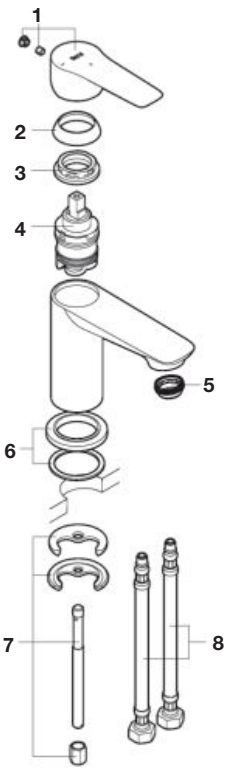

Grifería para lavabo / Basin faucet

A5A348G..0

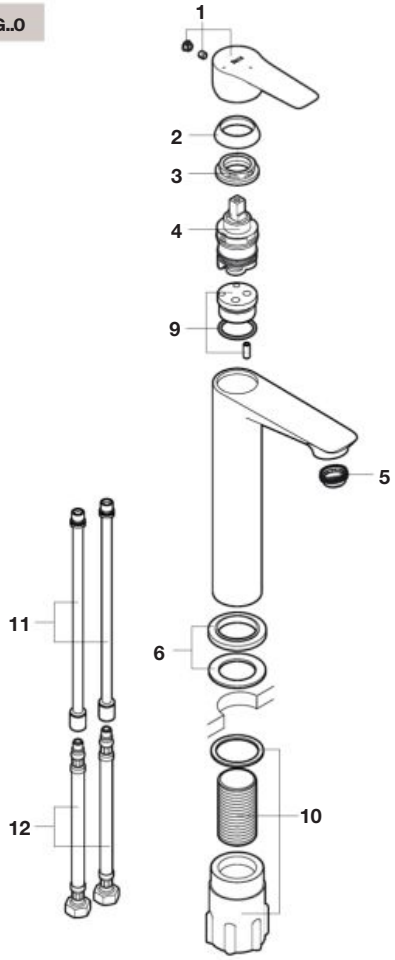

Grifería empotrable para lavabo
Wall-mounted basin faucet

A5A358G..0

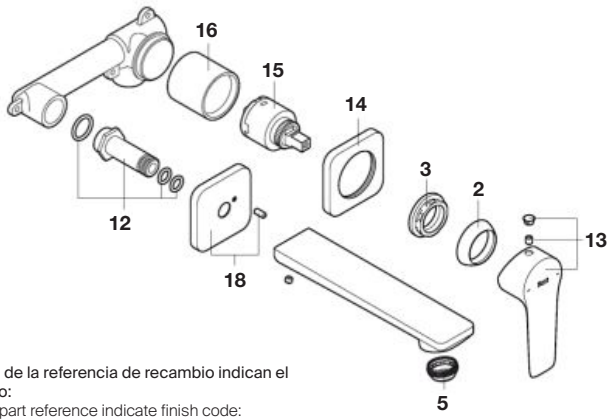

Los ultimos dígitos de la referencia de recambio indican el código del acabado:
Last digits of spare part reference indicate finish code:
00 Cromado / Chromed
NB Negro mate / Matt black

			€
1	**AG02803..R**		9,41
2	**AG02810..R**		2,47
3	**AG0281100R**		2,26
4	**AG0280600R**		7,92
5	**AG0129507R**		5,52
6	**AG02812..R**		2,91
7	**A525025303**		8,35
8	**AG0282600R**	3/8"	6,41
9	**AG0281300R**		8,09
10	**AG0225400R**		29,90
11	**AG0281400R**		10,10
12	**AG0282500R**	3/8"	6,17

		€
13	**AG02804..R**	9,41
14	**AG02816..R**	9,86
15	**AG0280700R**	5,86
16	**AG02815..R**	6,85
17	**AG02189..R**	10,90
18	**AG02818..R**	9,86
19	**AG0281700R**	5,41
20	**AG0280800R**	5,23
21	**AG02819..R**	7,92
22	**AG02820..R**	3,70
23	**AG02186..R**	15,50
24	**AG02853..R**	12,90

			€
25	2 un	**AG02821..R**	2,42
26	2 un	**AG02131..R**	8,70
27	2 un	**AG0103908R**	17,30
28		**AG01059..R**	8,97
29		**AG00827..R**	21,20
30		**AG02805..R**	16,10
31		**AG0280900R**	5,86
32		**AG02823..R**	9,12
33		**AG02822..R**	2,47
34		**AG0187500R**	2,91

Monodin-N

Grifería para bidé / Bidet faucet

A5A628G..0

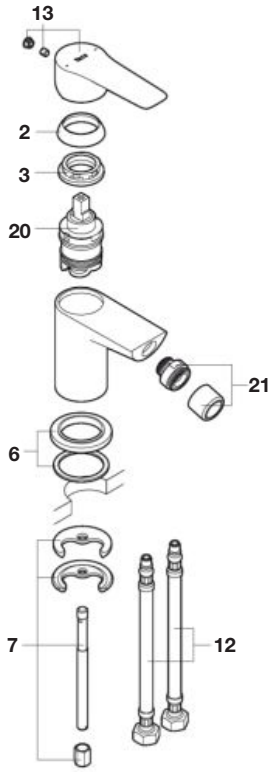

Grifería para ducha
Shower faucet

A5A348G..0

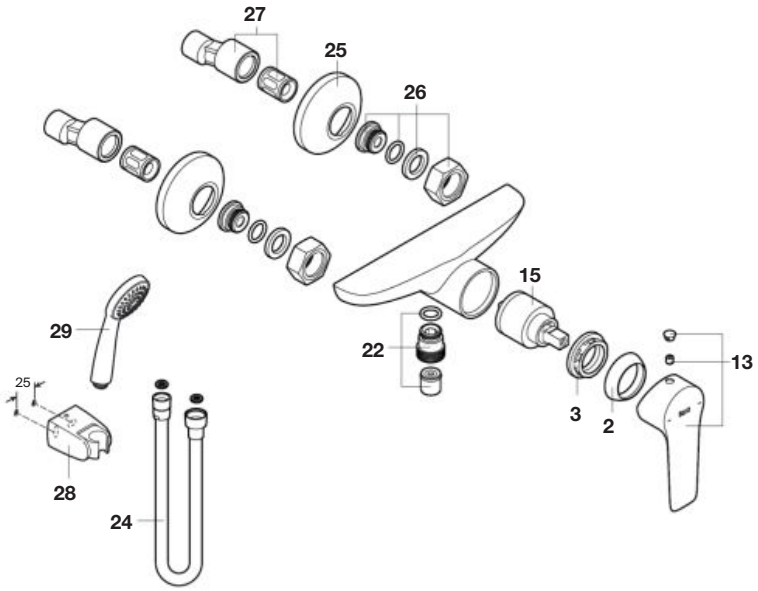

Los ultimos dígitos de la referencia de recambio indican el código del acabado:
Last digits of spare part reference indicate finish code:
00 Cromado / Chromed
NB Negro mate / Matt black

			€
1	**AG02803..R**		9,41
2	**AG02810..R**		2,47
3	**AG0281100R**		2,26
4	**AG0280600R**		7,92
5	**AG0129507R**		5,52
6	**AG02812..R**		2,91
7	**A525025303**		8,35
8	**AG0282600R**	3/8"	6,41
9	**AG0281300R**		8,09
10	**AG0225400R**		29,90
11	**AG0281400R**		10,10
12	**AG0282500R**	3/8"	6,17

		€
13	**AG02804..R**	9,41
14	**AG02816..R**	9,86
15	**AG0280700R**	5,86
16	**AG02815..R**	6,85
17	**AG02189..R**	10,90
18	**AG02818..R**	9,86
19	**AG0281700R**	5,41
20	**AG0280800R**	5,23
21	**AG02819..R**	7,92
22	**AG02820..R**	3,70
23	**AG02186..R**	15,50
24	**AG02853..R**	12,90

			€
25	2 un	**AG02821..R**	2,42
26	2 un	**AG02131..R**	8,70
27	2 un	**AG0103908R**	17,30
28		**AG01059..R**	8,97
29		**AG00827..R**	21,20
30		**AG02805..R**	16,10
31		**AG0280900R**	5,86
32		**AG02823..R**	9,12
33		**AG02822..R**	2,47
34		**AG0187500R**	2,91

Monodin-N

Grifería para baño y ducha
Bath and shower faucet

A5A018G..0

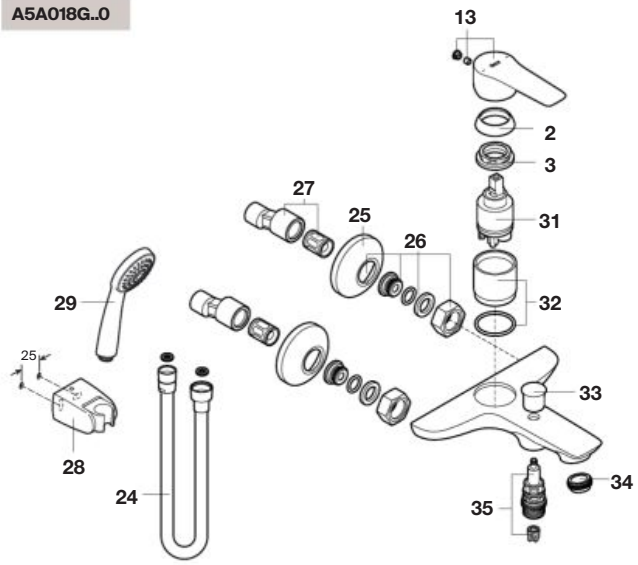

Grifería empotrable para baño o ducha
Wall-mounted bath or shower faucet

A5A228G..0

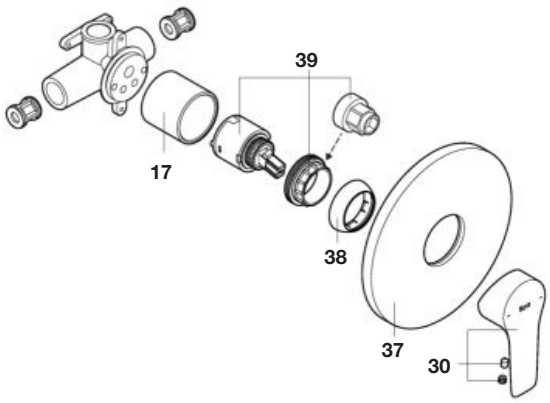

Grifería empotrable para baño y ducha
Wall-mounted bath and shower faucet

A5A068G..0

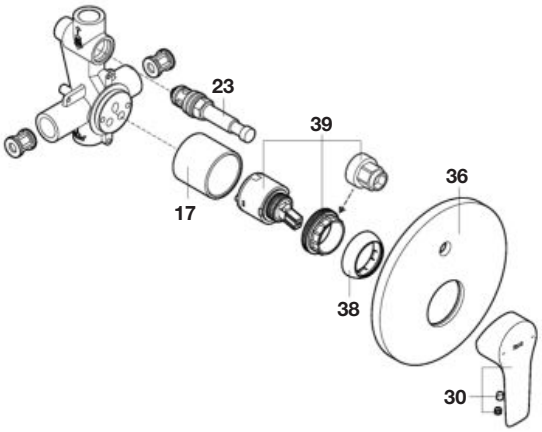

Los ultimos dígitos de la referencia de recambio indican el código del acabado:
Last digits of spare part reference indicate finish code:
00 Cromado / Chromed
NB Negro mate / Matt black

			€
1	**AG02803..R**		9,41
2	**AG02810..R**		2,47
3	**AG0281100R**		2,26
4	**AG0280600R**		7,92
5	**AG0129507R**		5,52
6	**AG02812..R**		2,91
7	**A525025303**		8,35
8	**AG0282600R**	3/8"	6,41
9	**AG0281300R**		8,09
10	**AG0225400R**		29,90
11	**AG0281400R**		10,10
12	**AG0282500R**	3/8"	6,17

		€
13	**AG02804..R**	9,41
14	**AG02816..R**	9,86
15	**AG0280700R**	5,86
16	**AG02815..R**	6,85
17	**AG02189..R**	10,90
18	**AG02818..R**	9,86
19	**AG0281700R**	5,41
20	**AG0280800R**	5,23
21	**AG02819..R**	7,92
22	**AG02820..R**	3,70
23	**AG02186..R**	15,50
24	**AG02853..R**	12,90

			€
25	2 un	**AG02821..R**	2,42
26	2 un	**AG02131..R**	8,70
27	2 un	**AG0103908R**	17,30
28		**AG01059..R**	8,97
29		**AG00827..R**	21,20
30		**AG02805..R**	16,10
31		**AG0280900R**	5,86
32		**AG02823..R**	9,12
33		**AG02822..R**	2,47
34		**AG0187500R**	2,91

Monodin

Grifería para lavabo y bidé / Basin and bidet faucet

A5A3098
A5A3198
A5A3298

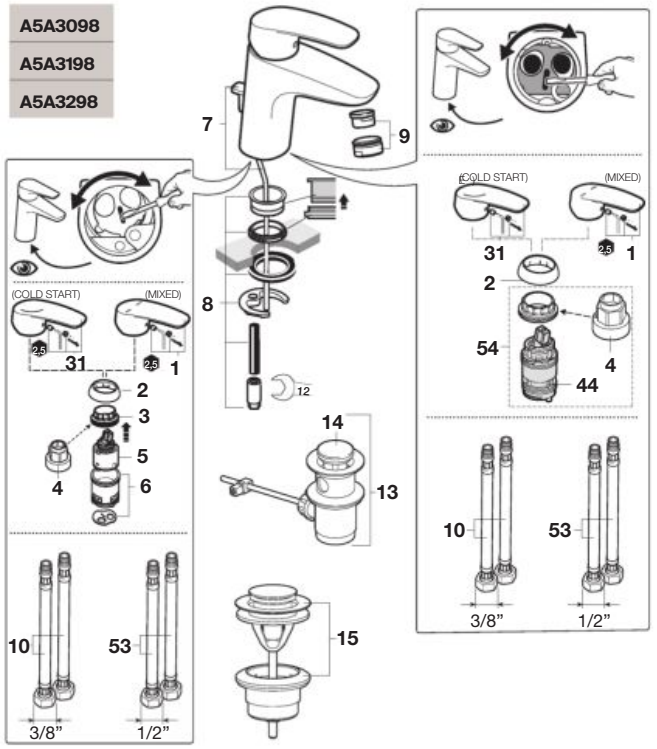

A5A6098
A5A6198

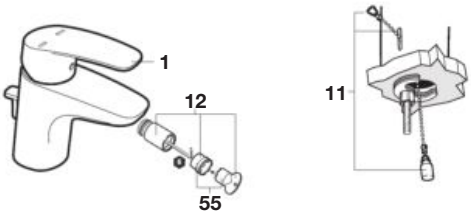

Grifería empotrable para lavabo
Wall-mounted basin faucet

A5A3L98..0 + **A525220603**

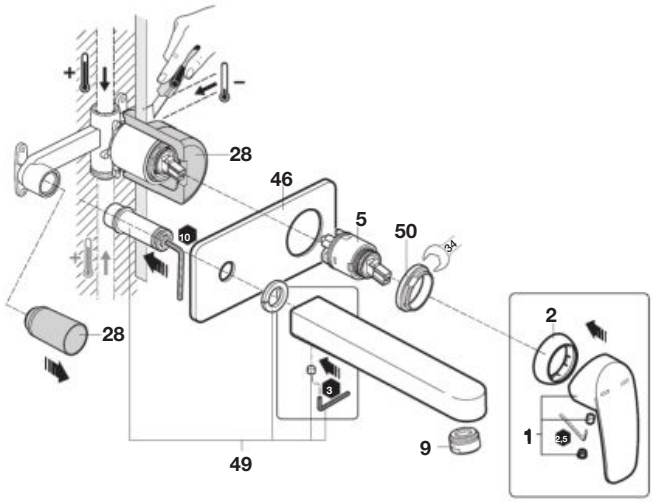

			€
1	**AG0134600R**		31,70
2	**AG0085300R**		18,00
3	**A525023507**		4,23
4	**A525005407**		7,44
5	**AG0173300R**		15,50
6	**AG0096307R**		6,45
7	**A525020600**		8,88
8	**A525004403**		7,92
9	**AG0046600R**	5 l/min	11,40
	AG0129000R	1,85 l/min	9,26
10	**AG0096409R**		13,90
11	**A525004600**		8,20
12	**A525003507**		38,20
13	**AG0075200R**		16,80
14	**AG0085700R**		16,20

		€
15	**A505400900**	-
16	**AG0116700R**	4,36
17	**A525003600**	4,85
18	**AG0116500R**	13,90
19	**AG0134907R**	6,77
20	**AG0085400R**	8,41
21	**AG0103908R**	17,30
22	**A525005200**	15,30
23	**AG0036800R**	3,71
24	**A525005507**	7,44
25	**AG0116400R**	6,18
26	**AG0110607R**	9,98
27	**AG0119500R**	19,40
28	**AG0001907R**	11,00
29	**A525006500**	23,30

		€
30	**AG0119600R**	20,60
31	**AG0135100R**	15,80
32	**AG0005700R**	98,30
33	**AG0017707R**	5,83
34	**A525006903**	8,56
35	**A525020309**	15,00
36	**A525006600**	7,44
37	**AG0004407R**	2,23
38	**AG0101207R**	2,35
39	**AG0077807R**	42,10
40	**AG0085600R**	5,50
42	**A525004700**	7,44
43	**AG0125909R**	18,30

			€
44	**AG0159300R**	CoLDSTART	12,50
	AG0163600R	Mixed	12,40
45	**AG0096509R**		16,40
46	**AG0142300R**		10,60
47	**AG0033300R**		30,00
48	**AG0136903R**		9,95
49	**AG0155000R**		9,41
50	**AG0142100R**		3,20
51	**AG0163900R**		35,80
52	**AG0096200R**		7,48
53	**AG0204700R**		16,20
54	**AG0200700R**	CoLDSTART	19,40
	AG0200600R	Mixed	17,40
55	**AG0122107R**		10,20
56	**AG0117300R**		4,33

Monodin

Grifería para baño y ducha / Bath and shower faucet

A5A0298
A5A2198

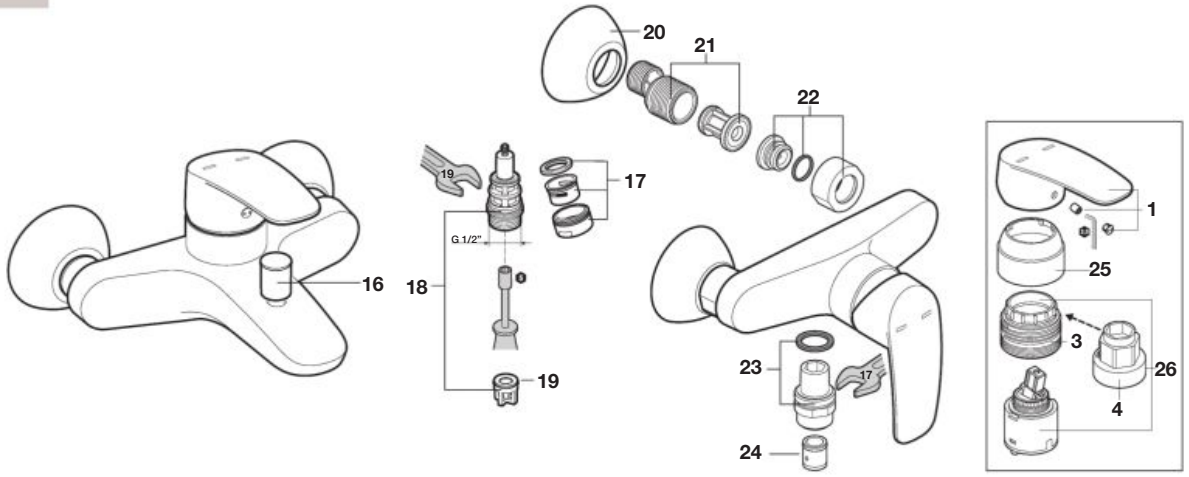

Grifería empotrable para baño y ducha
Wall-mounted bath and shower faucet

A5A2298

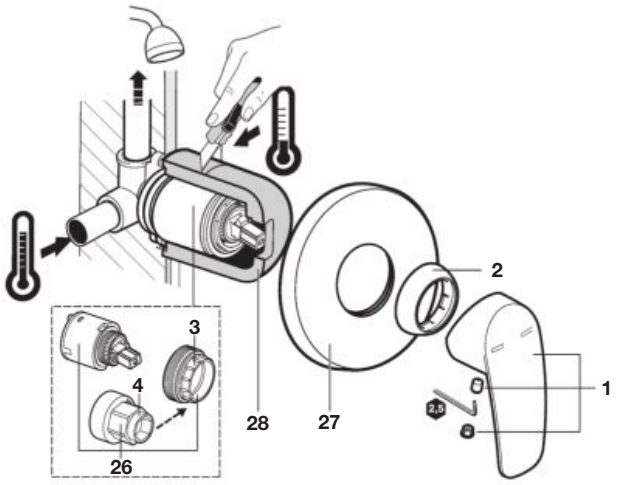

Grifería empotrable para baño y ducha
Wall-mounted bath and shower faucet

A5A0698

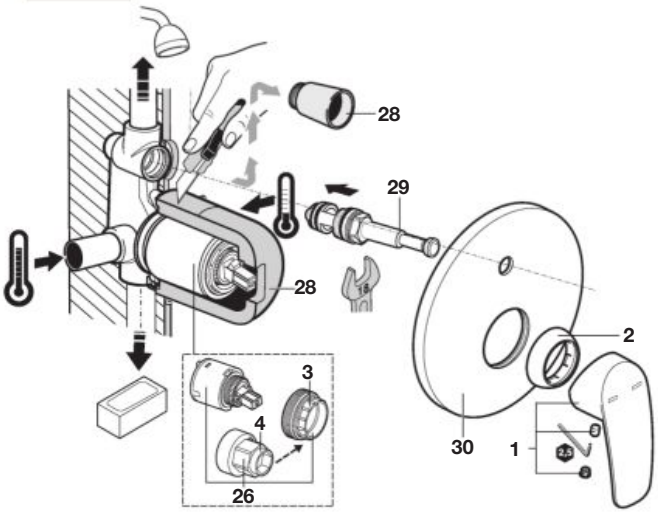

			€
1	**AG0134600R**		31,70
2	**AG0085300R**		18,00
3	**A525023507**		4,23
4	**A525005407**		7,44
5	**AG0173300R**		15,50
6	**AG0096307R**		6,45
7	**A525020600**		8,88
8	**A525004403**		7,92
9	**AG0046600R**	5 l/min	11,40
	AG0129000R	1,85 l/min	9,26
10	**AG0096409R**		13,90
11	**A525004600**		8,20
12	**A525003507**		38,20
13	**AG0075200R**		16,80
14	**AG0085700R**		16,20

		€
15	**A505400900**	-
16	**AG0116700R**	4,36
17	**A525003600**	4,85
18	**AG0116500R**	13,90
19	**AG0134907R**	6,77
20	**AG0085400R**	8,41
21	**AG0103908R**	17,30
22	**A525005200**	15,30
23	**AG0036800R**	3,71
24	**A525005507**	7,44
25	**AG0116400R**	6,18
26	**AG0110607R**	9,98
27	**AG0119500R**	19,40
28	**AG0001907R**	11,00
29	**A525006500**	23,30

		€
30	**AG0119600R**	20,60
31	**AG0135100R**	15,80
32	**AG0005700R**	98,30
33	**AG0017707R**	5,83
34	**A525006903**	8,56
35	**A525020309**	15,00
36	**A525006600**	7,44
37	**AG0004407R**	2,23
38	**AG0101207R**	2,35
39	**AG0077807R**	42,10
40	**AG0085600R**	5,50
41	**AG0200600R**	17,40
42	**A525004700**	7,44
43	**AG0125909R**	18,30

			€
44	**AG0159300R**	Cold Start	12,50
	AG0163600R	Mixed	12,40
45	**AG0096509R**		16,40
46	**AG0142300R**		10,60
47	**AG0033300R**		30,00
48	**AG0136903R**		9,95
49	**AG0155000R**		9,41
50	**AG0142100R**		3,20
51	**AG0163900R**		35,80
52	**AG0096200R**		7,48
53	**AG0204700R**		16,20
54	**AG0200700R**		19,40
55	**AG0122107R**		10,20
56	**AG0117300R**		4,33

Cala

Grifería para lavabo / Basin faucet

A5A306E
A5A316E
A5A326E

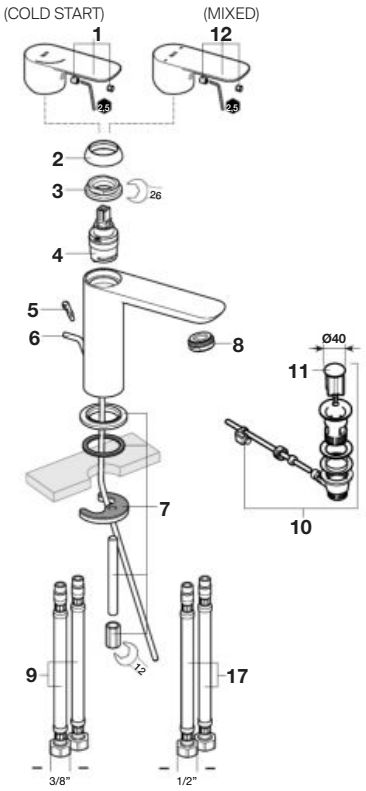

Grifería para lavabo / Basin faucet

A5A3B6E
A5A346E

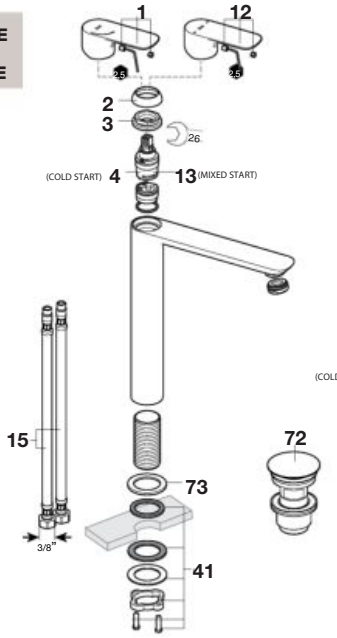

A5A336E



Grifería para bidé / Bidet faucet

A5A606E
A5A616E

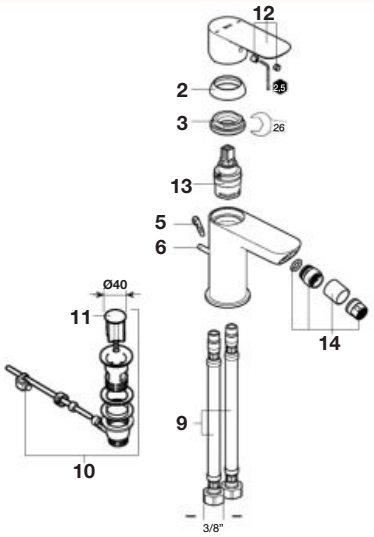

Grifería empotrable para lavabo
Wall-mounted basin faucet

A5A356E + **A525220603**

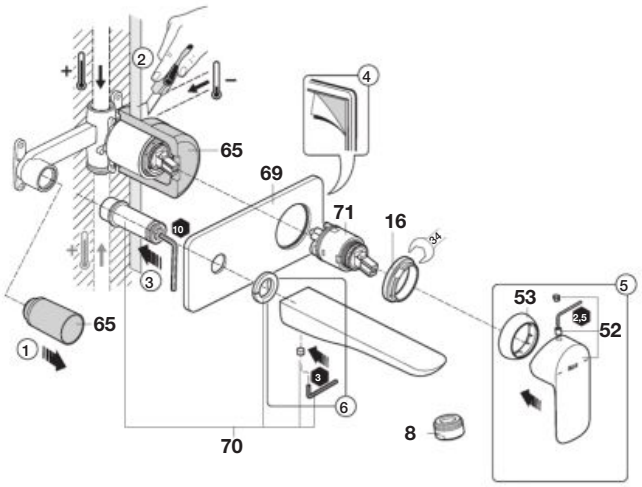

Los ultimos dígitos de la referencia de recambio indican el código del acabado:
Last digits of spare part reference indicate finish code:
00 Cromado / Chromed
NB Negro mate / Matt black
B0 Blanco mate / White matt

		€
	AG0223000R	14,70
1	**AG02230NBR**	28,00
	AG02230B0R	26,10
	AG0223100R	3,97
2	**AG02231NBR**	7,73
	AG02231B0R	8,65
3	**AG0222900R**	6,80
4	**AG0223200R**	11,60
5	**A525094707**	16,90

		€
6	**AG0223300R**	5,97
7	**AG0223400R**	8,62
8	**AG0196400R**	6,55
9	**A525020309**	15,00
10	**AG0075300R**	28,80
11	**AG0096200R**	7,48
	AG0223500R	15,50
12	**AG02235NBR**	44,60
	AG02235B0R	26,70

		€
13	**AG0223600R**	10,50
	AG0032300R	15,90
14	**AG00323NBR**	14,00
	AG00323B0R	19,70
15	**A525020409**	18,60
16	**AG0142100R**	3,20
17	**AG0174608R**	13,20
41	**AG0225400R**	29,90
42	**AG0225500R**	25,00

		€
	AG0226400R	16,80
52	**AG02264NBR**	30,60
	AG02264B0R	27,70
	AG0085300R	18,00
53	**AG00853NBR**	10,80
	AG00853B0R	8,35
65	**AG0001907R**	11,00
69	**AG0142300R**	10,60
70	**AG0155000R**	9,41

		€
71	**AG0173300R**	15,50
	A5054015..	-
72	**A5054015NB**	-
	A5054015B0	-
	AG0231700R	8,15
73	**AG02317NBR**	11,80
	AG02317B0R	11,80

Cala

Grifería para baño y ducha / Bath and shower faucet

A5A216E

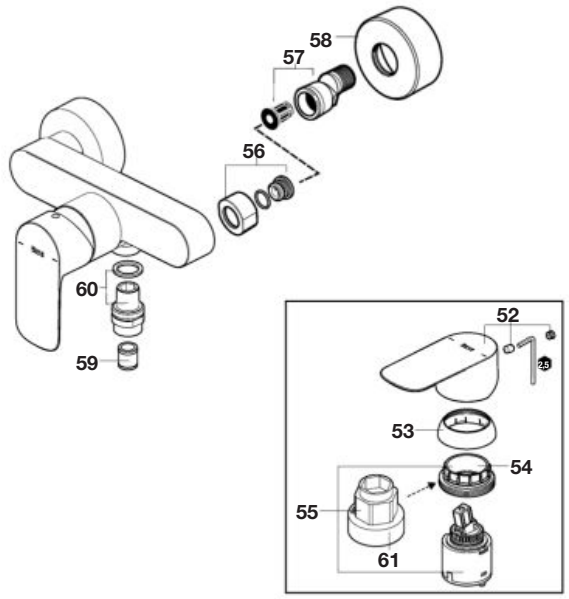

Grifería para baño y ducha / Bath and shower faucet

A5A026E

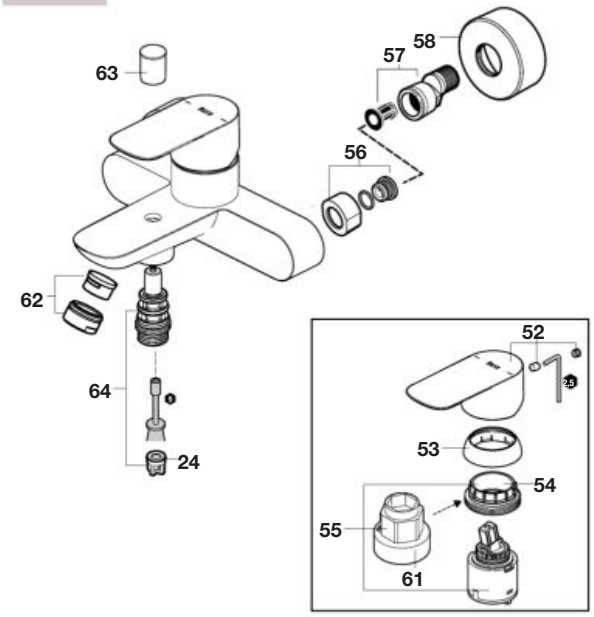

Grifería empotrable para ducha
Wall-mounted shower faucet

A5A226E

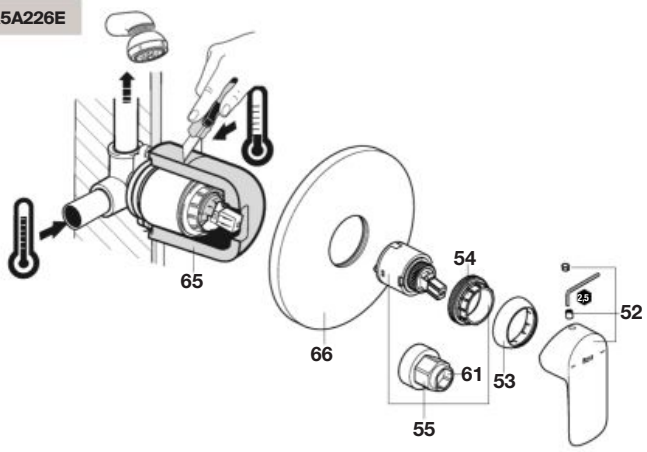

Grifería empotrable para baño y ducha
Wall-mounted bath and shower faucet

A5A066E

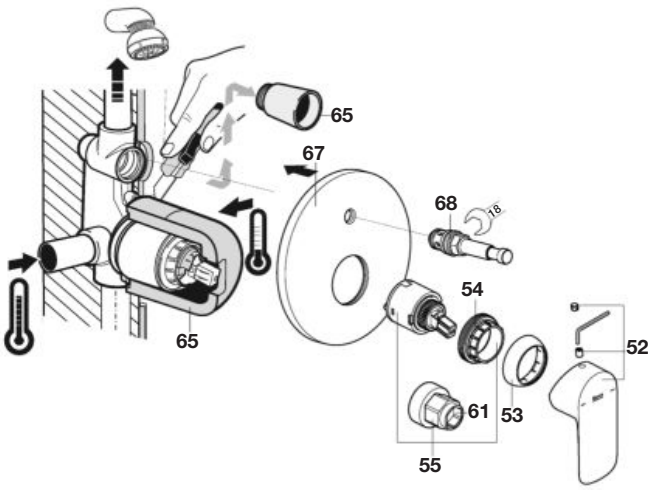

Los ultimos dígitos de la referencia de recambio indican el código del acabado:
Last digits of spare part reference indicate finish code:
00 Cromado / Chromed
NB Negro mate / Matt black

			€
24	2 un	**AG0134907R**	6,77
52		**AG0226400R**	16,80
		AG02264NBR	30,60
		AG02264B0R	27,70
53		**AG0085300R**	18,00
		AG00853NBR	10,80
		AG00853B0R	8,35
54		**A525023507**	4,23
55		**AG0110607R**	9,98

			€
56		**AG0213100R**	8,70
		AG02131NBR	20,80
		AG02131B0R	11,40
57	2 un	**AG0103908R**	17,30
58	2 un	**AG0116800R**	9,26
		AG01168NBR	38,20
		AG01168B0R	11,20
59	2 un	**A525005507**	7,44
60		**AG0036800R**	3,71
61		**A525005407**	7,44

		€
	AG0212800R	3,15
62	**AG02128NBR**	7,36
	AG02128B0R	5,36
	AG0116700R	4,36
63	**AG01167NBR**	10,90
	AG01167B0R	8,35
64	**AG0116500R**	13,90
65	**AG0001907R**	11,00

		€
	AG0119500R	19,40
66	**AG01195NBR**	112,00
	AG01195B0R	24,40
	AG0119600R	20,60
67	**AG01196NBR**	115,00
	AG01196B0R	24,40
	A525006500	23,30
	Cromado / Chromed	23,30
68	**AG02186NBR**	45,80
	AG02186B0R	23,60

L20

Grifería para lavabo y bidé / Basin and bidet faucet

A5A3009	**A5A3A09**	**A5A3E09**	**A5A3I09**	**A5A3N09**
A5A3109	**A5A3B09**	**A5A3F09**	**A5A3J09**	
A5A3209	**A5A3D09**	**A5A3G09**	**A5A3K09**	

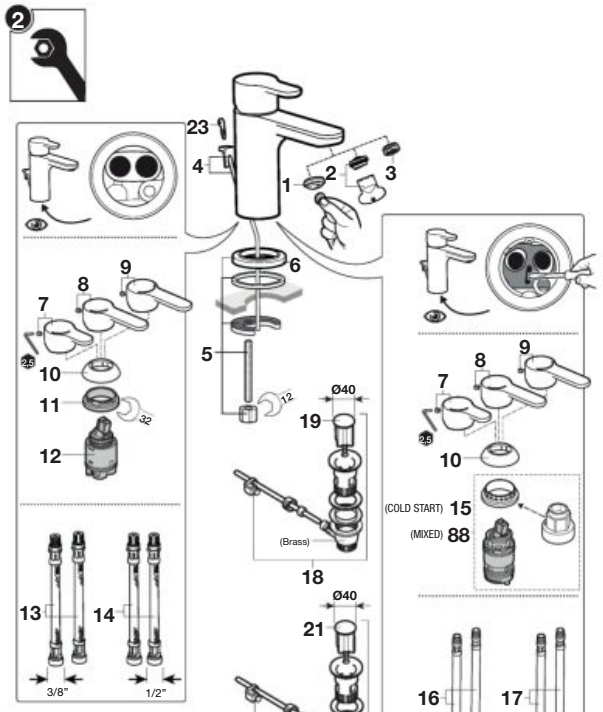

A5A6009	**A5A6109**	**A5A6A09**	**A5A6B09**



Grifería para lavabo / Basin faucet

A5A3409	**A5A3H09**
A5A3C09	**A5A3P09**

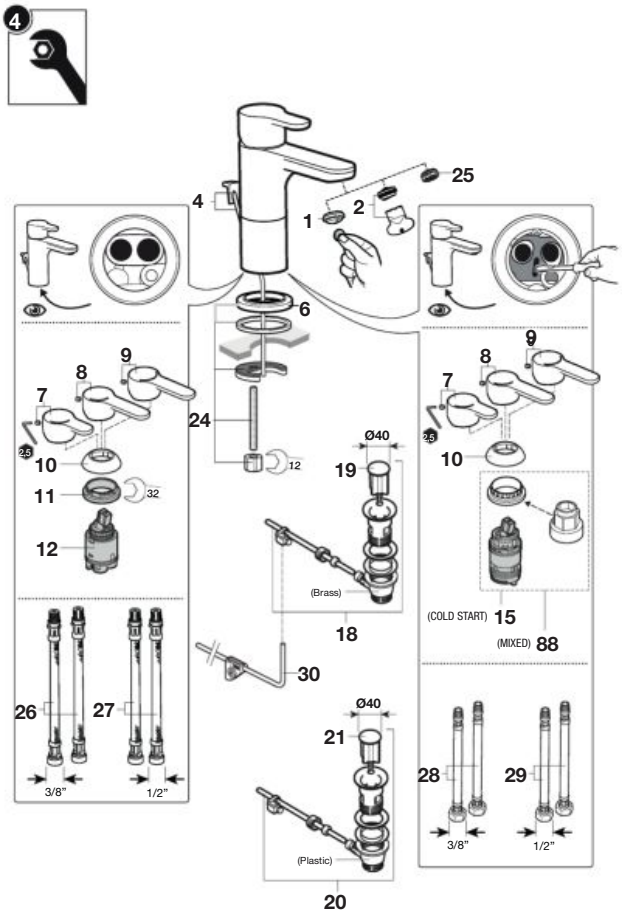

Los ultimos dígitos de la referencia de recambio indican el código del acabado:
Last digits of spare part reference indicate finish code:
00 Cromado / Chromed
NB Negro mate / Matt black

		€
1	**AG0129507R**	5,52
2	**AG0134507R**	7,95
3	**AG0099100R**	14,70
4	**A525020600**	8,88
5	**AG0143700R**	7,52
	AG01437NBR	13,20
6	**AG0032800R**	25,80
	AG00328NBR	-

		€
7	**AG0032000R**	17,40
8	**AG0104000R**	27,90
	AG01040NBR	25,00
9	**AG0131500R**	25,80
10	**AG0032100R**	27,90
	AG00321NBR	15,20
11	**AG0133903R**	3,15
12	**AG0141207R**	19,20

		€
13	**A525020309**	15,00
14	**AG0092409R**	8,86
15	**AG0200700R**	19,40
16	**AG0096409R**	13,90
17	**AG0126009R**	17,00
18	**AG0075300R**	28,80
19	**AG0096200R**	7,48
20	**AG0075200R**	16,80

		€
21	**AG0085700R**	16,20
22	**AG0032300R**	15,90
	AG00323NBR	14,00
23	**A525094707**	16,90
24	**AG0117500R**	7,62
	AG01175NBR	14,00
25	**AG0046600R**	11,40
	AG00466NBR	10,60

		€
26	**A525020409**	18,60
27	**AG0125509R**	-
28	**AG0096509R**	16,40
29	**AG0125909R**	18,30
30	**AG0033300R**	30,00
88	**AG0200600R**	17,40

L20

Grifería para lavabo / Basin faucet

A5A4009

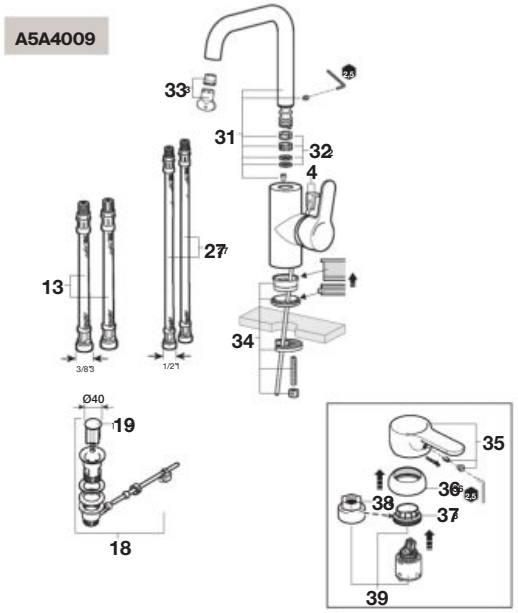

Grifería empotrable para lavabo
Wall-mounted basin faucet

A5A3L09..0 + **A525220603**

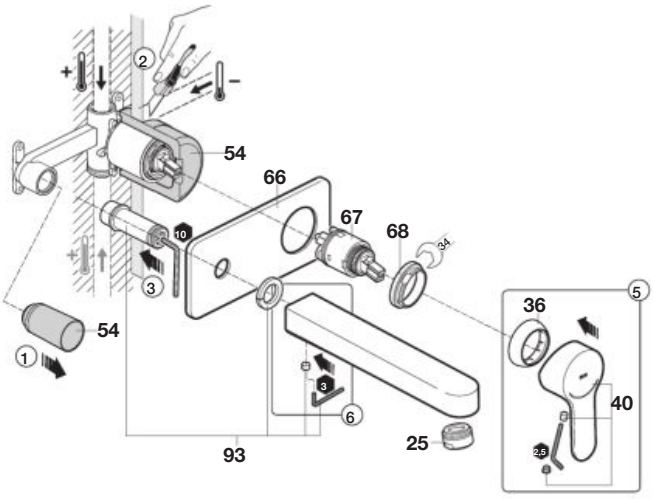

Grifería para baño y ducha / Bath and shower faucet

A5A2009
A5A2109

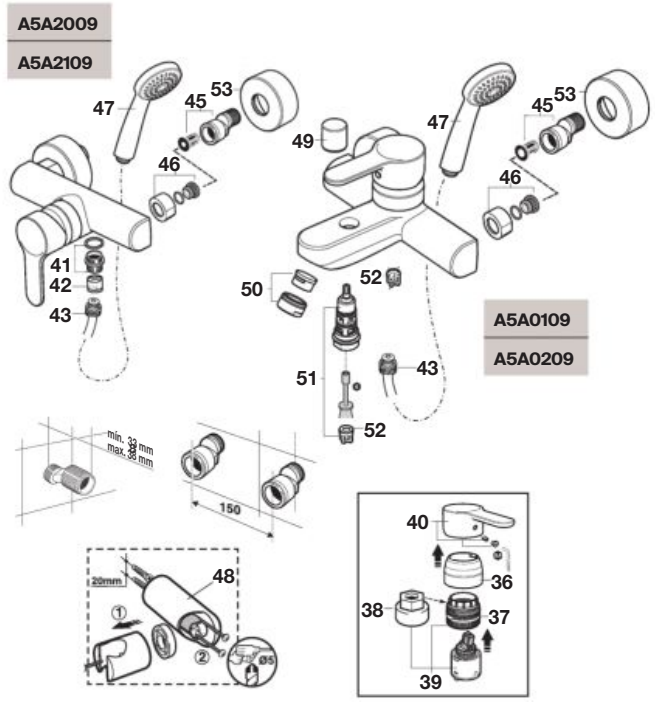

A5A0109
A5A0209

Grifería empotrable para baño y ducha
Wall-mounted bath and shower faucet

A5A2209

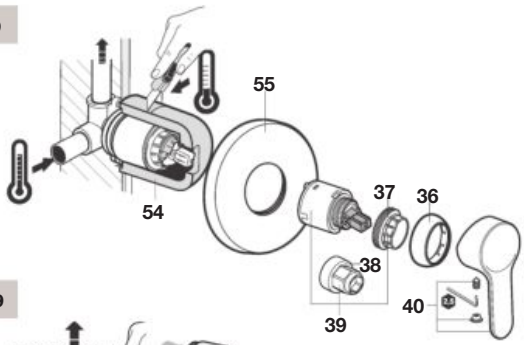

A5A0609

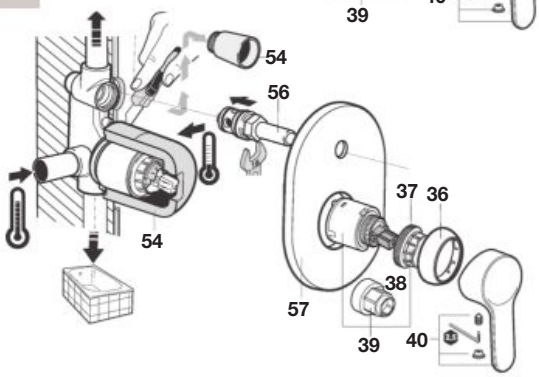

		€
4	**A525020600**	8,88
13	**A525020309**	15,00
18	**AG0075300R**	28,80
19	**AG0096200R**	7,48
25	**AG0046600R**	11,40
	AG00466NBR	10,60
27	**AG0125509R**	-
31	**AG0090100R**	66,40
32	**AG0017707R**	5,83
33	**AG0122107R**	10,20
34	**A525004403**	7,92
35	**AG0071600R**	17,40

		€
36	**AG0085300R**	18,00
	AG00853NBR	10,80
37	**A525023507**	4,23
38	**A525005407**	7,44
39	**AG0110607R**	9,98
40	**AG0032400R**	20,20
	AG00324NBR	29,70
41	**AG0036800R**	3,71
42 2 un	**A525005507**	7,44
43	**A525009800**	27,10
	A5B2116NB0	-
44	**AG0087100R**	6,94

		€
45 2 un	**AG0103908R**	17,30
46	**A525005200**	15,30
	AG02131NBR	20,80
47	**A5BCB13C00**	-
48	**AG0003700R**	13,70
	A5B1350NB0	-
49	**AG0116700R**	4,36
	AG01167NBR	10,90
50	**A525003600**	4,85
	AG02128NBR	7,36
51	**AG0116500R**	13,90
52	**AG0134907R**	6,77

		€
53 2 un	**AG0116800R**	9,26
	AG01168NBR	38,20
54	**AG0001907R**	11,00
55	**A525002800**	37,60
56	**A525006500**	23,30
	Cromado / Chromed	
	AG02186NBR	45,80
57	**A525002700**	47,20
62	**AG0123907R**	13,80
63	**AG0172200R**	3,70
64	**AG0172300R**	4,15
65	**AG0159400R**	22,70

Los ultimos dígitos de la referencia de recambio indican el código del acabado:
Last digits of spare part reference indicate finish code:
00 Cromado / Chromed
NB Negro titanio cepillado / Brushed titanium black

		€
66	**AG0142300R**	10,60
	AG01423NBR	10,70
67	**A525022907**	20,80
68	**AG0142100R**	3,20
93	**AG0155000R**	9,41

L20

Grifería empotrable para lavabo
Wall-mounted basin faucet

A5A3509

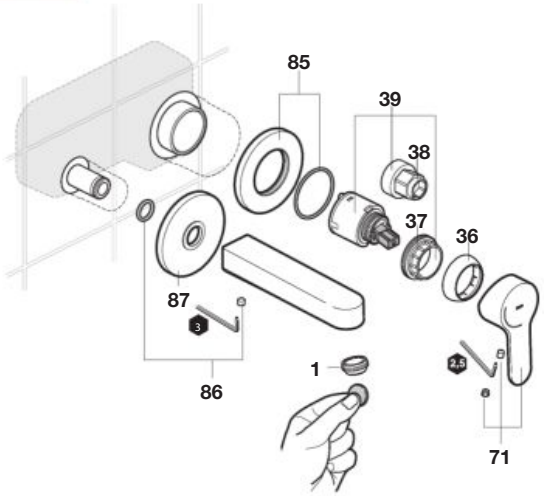

Grifería empotrable para baño y ducha
Wall-mounted bath and shower faucet

A5A2209

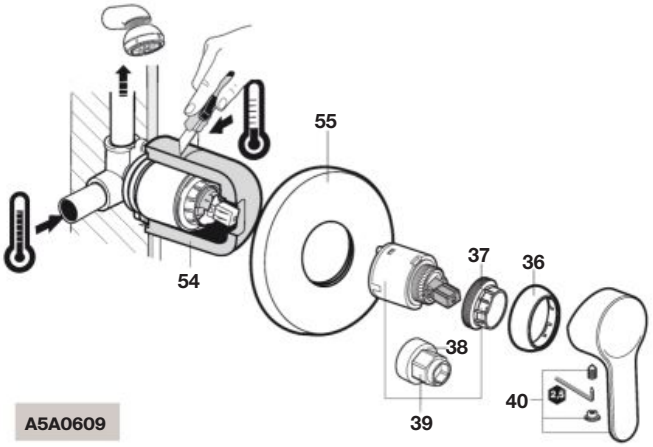

A5A0609

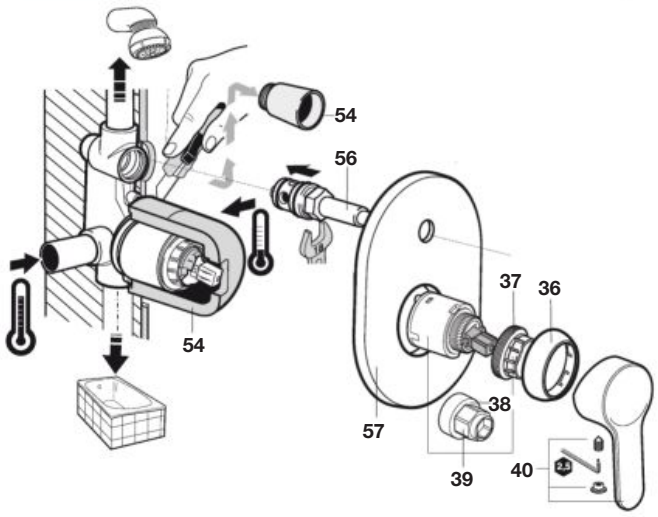

Los ultimos dígitos de la referencia de recambio indican el código del acabado:
Last digits of spare part reference indicate finish code:
00 Cromado / Chromed
NB Negro mate / Matt black

			€
1	**AG0129507R**		5,52
36	**AG0085300R**		18,00
	AG00853NBR		10,80
37	**A525023507**		4,23
38	**A525005407**		7,44
39	**AG0110607R**		9,98
40	**AG0032400R**		20,20
	AG00324NBR		29,70
54	**AG0001907R**		11,00
55	**A525002800**		37,60
56	**A525006500**	Cromado / Chromed	23,30
	AG02186NBR		45,80
57	**A525002700**		47,20
71	**AG0071400R**		17,30
85	**AG0071700R**		39,60
86	**AG0159500R**		32,30
87	**AG0071800R**		39,70

Alfa

Grifería para lavabo / Basin faucet

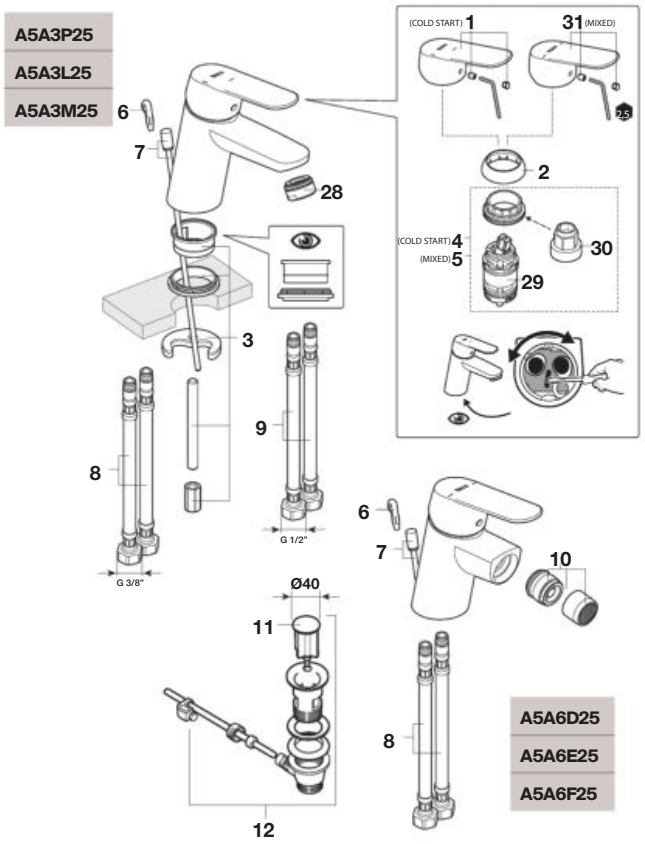

Grifería para baño y ducha / Bath and shower faucet

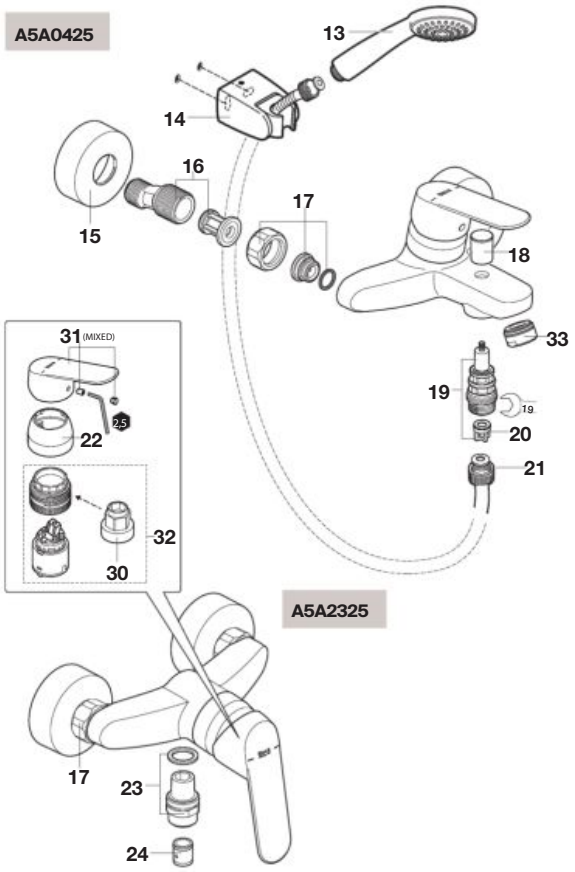

Grifería empotrable para baño y ducha
Wall-mounted bath and shower faucet

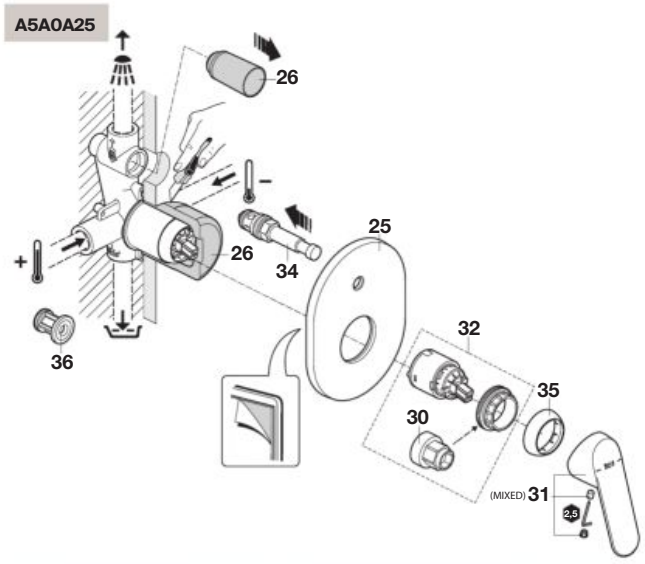

Grifería empotrable para baño y ducha
Wall-mounted bath and shower faucet

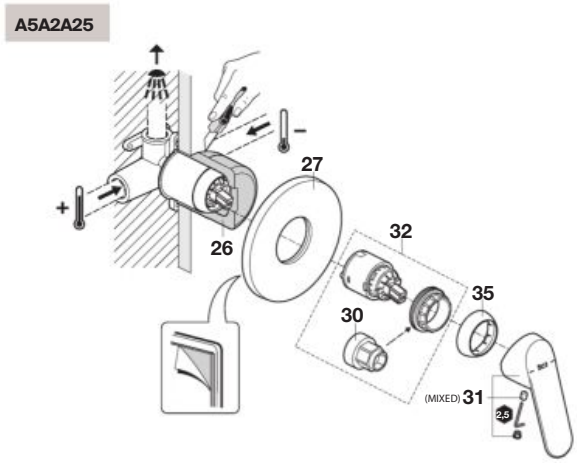

		€
1	**AG0222000R**	39,60
2	**AG0085300R**	18,00
3	**A525004403**	7,92
4	**AG0200700R**	19,40
5	**AG0200600R**	17,40
6	**A525094707**	16,90
7	**AG0003600R**	7,61
8	**AG0096409R**	13,90

		€
9	**AG0126009R**	17,00
10	**A525010900**	6,24
11	**AG0085700R**	16,20
12	**AG0075200R**	16,80
13	**A5B9103C00**	-
14	**AG0105900R**	8,97
15	**AG0116800R**	9,26
16	**AG0103908R**	17,30

		€
17	**AG0002500R**	15,60
18	**AG0116700R**	4,36
19	**AG0116500R**	13,90
20	**AG0134907R**	6,77
21	**A525009900**	52,60
22	**AG0085300R**	18,00
23	**AG0036800R**	3,71
24	**A525005507**	7,44

		€
25	**AG0222200R**	64,10
26	**AG0001907R**	11,00
27	**A525002800**	37,60
28	**AG0046600R**	11,40
29	**AG0159300R**	12,50
30	**A525005407**	7,44
31	**AG0222400R**	37,30
32	**AG0077807R**	42,10

		€
33	**A525005800**	7,44
34	**A525006500**	23,30
35	**A525006800**	20,50
36	**A525024803**	38,30

Victoria Plus

Grifería para lavabo y bidé / Basin and bidet faucet

A5A304F
A5A324F
A5A3A4F

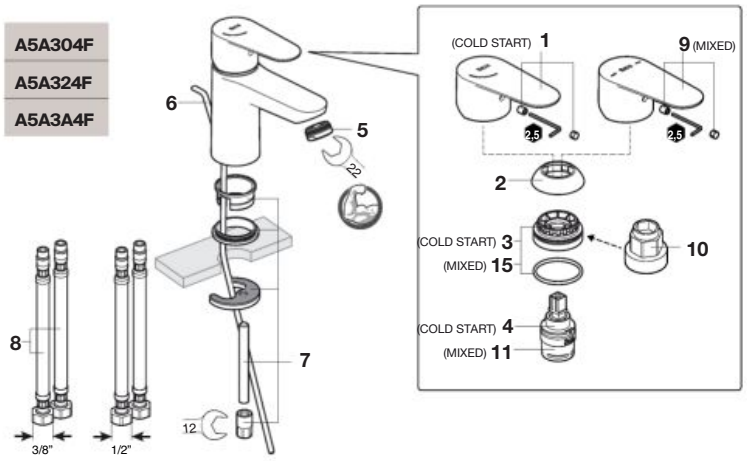

A5A604F
A5A624F

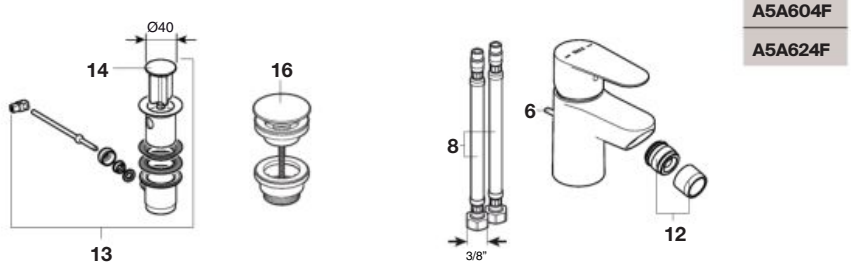

Grifería para lavabo / Basin faucet

A5A3C4F

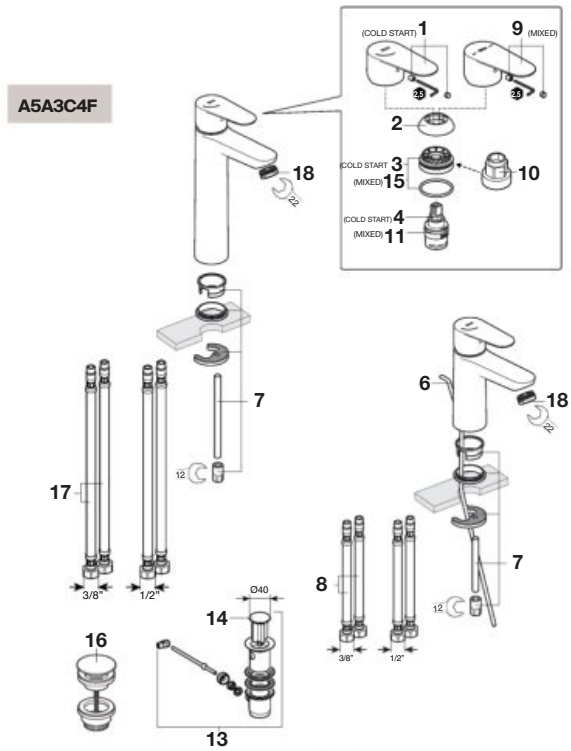

A5A334F
A5A3B4F

		€
1	**AG0240300R**	19,90
2	**AG0032100R**	27,90
3	**AG0240400R**	3,82
4	**AG0223200R**	11,60
5	**AG0196400R**	6,55
6	**AG0223300R**	5,97

		€
7	**A525004403**	7,92
8	**AG0119708R**	16,40
9	**AG0240500R**	11,90
10	**AG0215800R**	49,70
11	**AG0223600R**	10,50
12	**AG0174700R**	9,83

		€
13	**AG0075200R**	16,80
14	**AG0085700R**	16,20
15	**AG0240600R**	5,33
16	**A505400900**	-
17	**AG0223700R**	12,50
18	**AG0046600R**	11,40

Victoria Plus

Grifería para cocina / Kitchen faucet

A5A404F
A5A4A4F

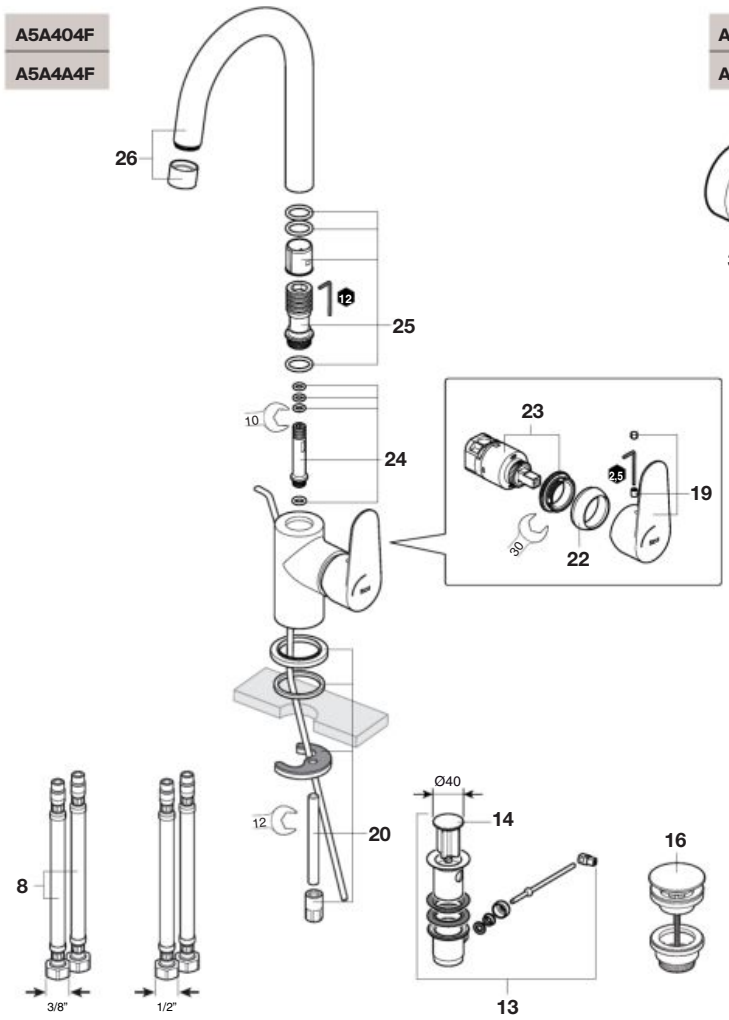

Grifería para baño y ducha / Bath and shower faucet

A5A204F
A5A214F

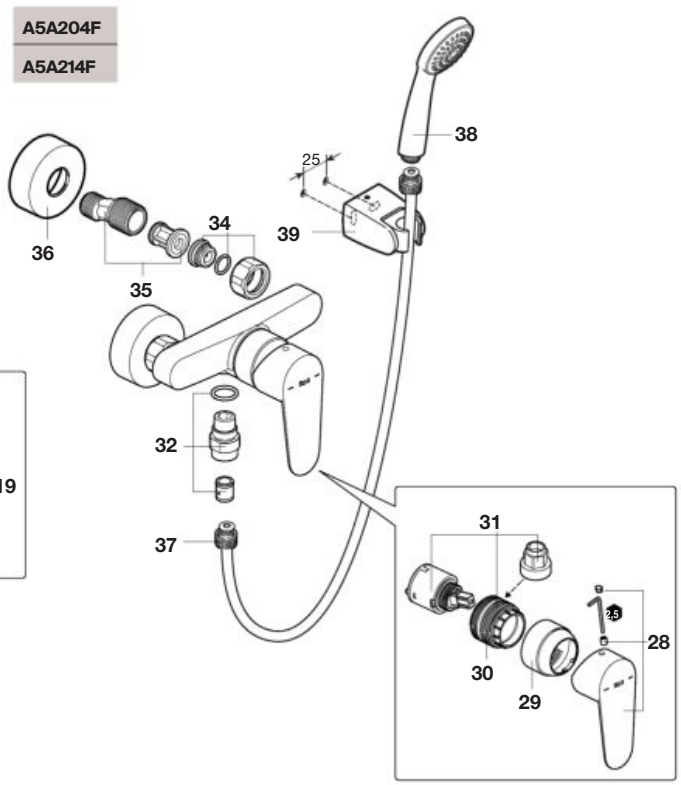

		€
8	**AG0119708R**	16,40
13	**AG0075200R**	16,80
14	**AG0085700R**	16,20
16	**A505400900**	-
19	**AG0240700R**	20,00
20	**AG0240800R**	11,20
22	**AG0241000R**	3,30
23	**AG0241100R**	16,80
24	**AG0241200R**	17,30
25	**AG0226000R**	20,60
26	**AG0241300R**	75,30

			€
28		**AG0241400R**	17,10
29		**AG0116400R**	6,18
30		**A525023507**	4,23
31		**AG0110607R**	9,98
32		**AG0241500R**	5,32
34	2 un	**AG0002500R**	15,60
35	2 un	**AG0103908R**	17,30
36	2 un	**AG0116800R**	9,26
37		**A525009900**	52,60
38		**AG0082700R**	21,20
39		**AG0105900R**	8,97

Victoria Plus

Grifería para baño y ducha / Bath and shower faucet

A5A014F
A5A024F

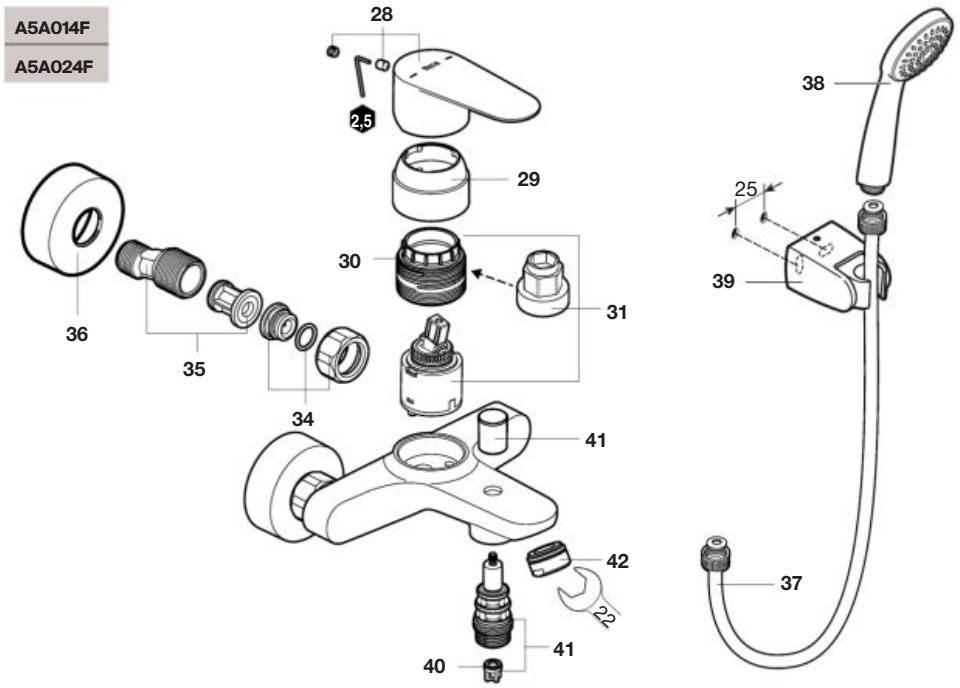

Grifería empotrable para baño y ducha / Wall-mounted bath and shower faucet

A5A224F

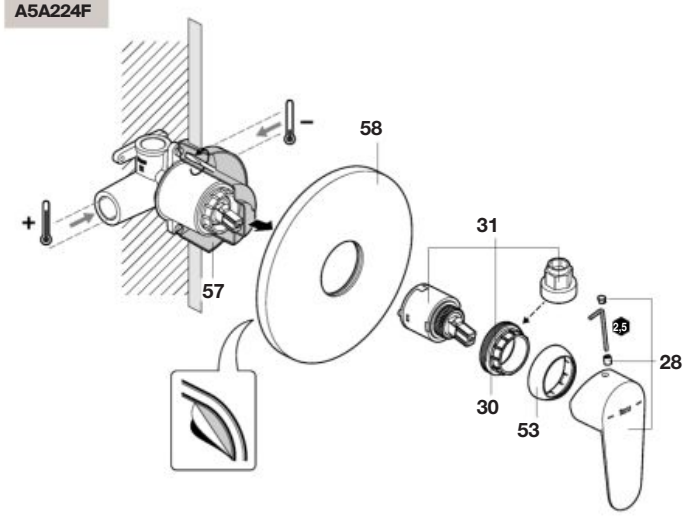

A5A064F

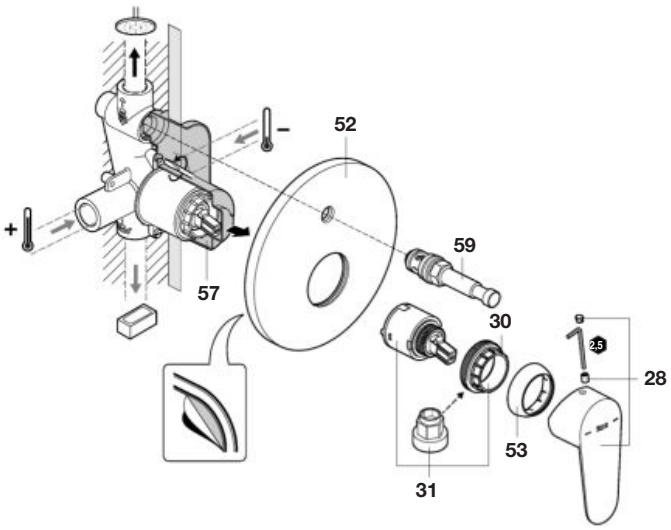

			€
28		**AG0241400R**	17,10
29		**AG0116400R**	6,18
30		**A525023507**	4,23
31		**AG0110607R**	9,98
34	2 un	**AG0002500R**	15,60
35	2 un	**AG0103908R**	17,30
36	2 un	**AG0116800R**	9,26
37		**A525009900**	52,60
38		**AG0082700R**	21,20

			€
39		**AG0105900R**	8,97
40	2 un	**AG0134907R**	6,77
41		**AG0241600R**	7,53
42		**A525005800**	7,44
52		**AG0119600R**	20,60
53		**AG0085300R**	18,00
57		**A525006800**	20,50
58		**AG0119500R**	19,40
59		**A525006500**	23,30

Victoria

Grifería para lavabo / Basin faucet

A5A3025
A5A3125

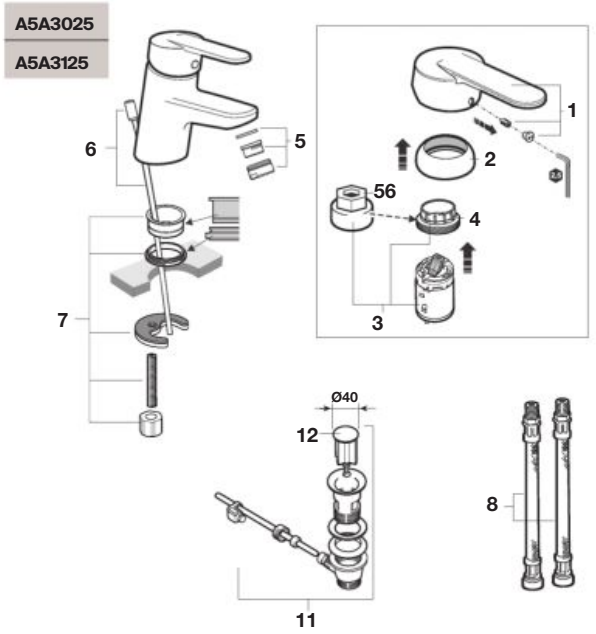

Griferia para bidé / Bidet faucet

A5A6025
A5A6125

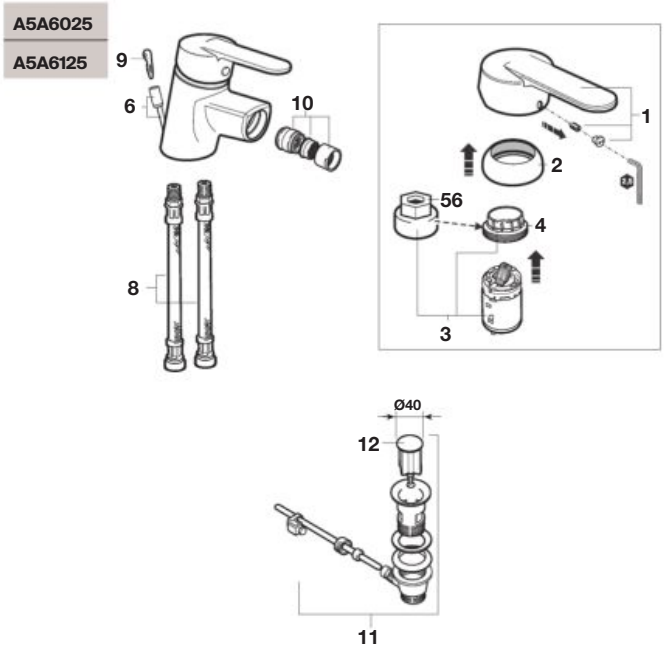

Grifería para lavabo / Basin faucet

A5A3E25
A5A3F25
A5A3G25

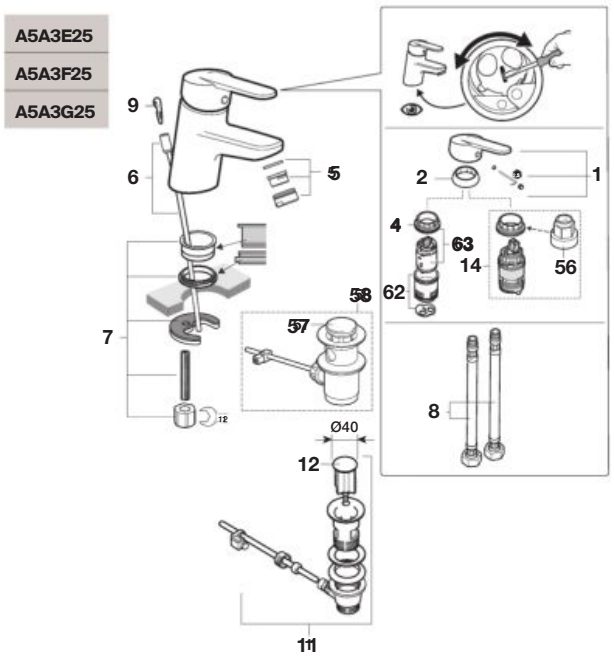

		€
1	**AG0003400R**	28,50
2	**AG0085300R**	18,00
3	**AG0077807R**	42,10
4	**A525023507**	4,23
5	**A525004700**	7,44
6	**AG0003600R**	7,61
7	**A525004403**	7,92
8	**AG0096409R**	13,90
9	**A525094707**	16,90
10	**A525010900**	6,24
11	**AG0075200R**	16,80
12	**AG0085700R**	16,20
13	**AG0163600R**	12,40

		€
14	**AG0200600R**	17,40
15	**AG0114300R**	4,44
16	**A525005507**	7,44
17	**A525005800**	7,44
18	**A525007700**	8,75
19	**AG0105900R**	8,97
20	**AG0103908R**	17,30
21	**AG0002500R**	15,60
22	**AG0085400R**	8,41
23	**AG0116700R**	4,36
24	**AG0116500R**	13,90
25	**AG0134907R**	6,77
26	**A525009800**	27,10

		€
27	**AG0036800R**	3,71
28	**AG0003500R**	12,00
29	**AG0024100R**	52,70
30	**AG0085500R**	13,50
31	**AG0001600R**	67,40
32	**AG0071500R**	27,10
33	**AG0114200R**	97,10
34	**AG0055100R**	23,50
35	**AG0002200R**	45,00
36	**AG0101207R**	2,35
37	**AG0085803R**	9,55
38	**AG0190200R**	65,30
39	**AG0004407R**	2,23

		€
40	**AG0085600R**	5,50
41	**AG0061409R**	31,90
42	**AG0122400R**	17,10
44	**AG0109709R**	8,77
45	**AG0000703R**	12,00
46	**AG0031700R**	26,70
47	**AG0078003R**	12,90
48	**A525008503**	8,41
49	**AG0118308R**	12,50
50	**A525005900**	59,20
51	**AG0001907R**	11,00
52	**A525006903**	8,56
53	**A525006500**	23,30

		€
54	**A525002700**	47,20
55	**A525002800**	37,60
56	**A525005407**	7,44
57	**AG0075300R**	28,80
58	**AG0096200R**	7,48
59	**A525087300**	18,90
60	**A525006600**	7,44
61	**A525023200**	11,90
62	**AG0096307R**	6,45
63	**AG0141207R**	19,20
64	**A525007800**	11,10

Victoria

Grifería para baño y ducha / Bath and shower faucet

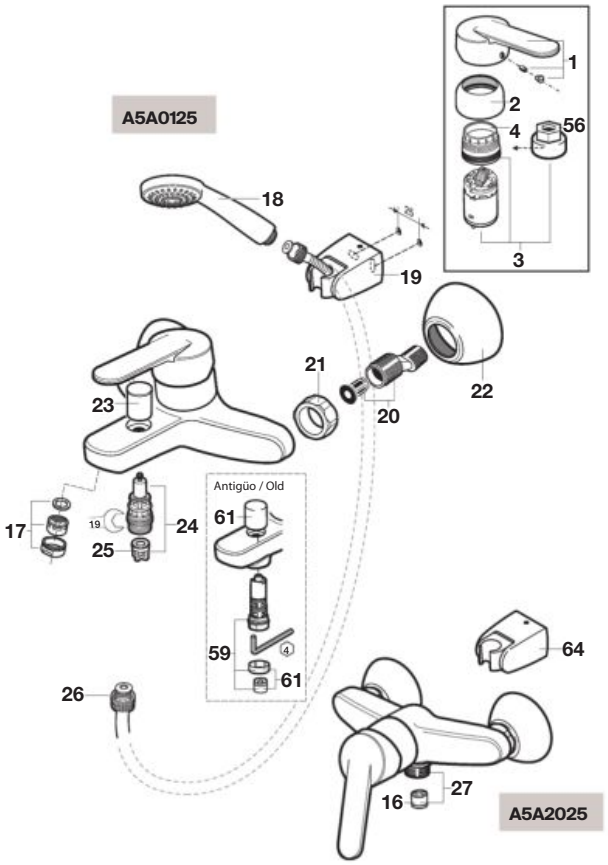

Grifería empotrable para baño y ducha
Wall-mounted bath and shower faucet

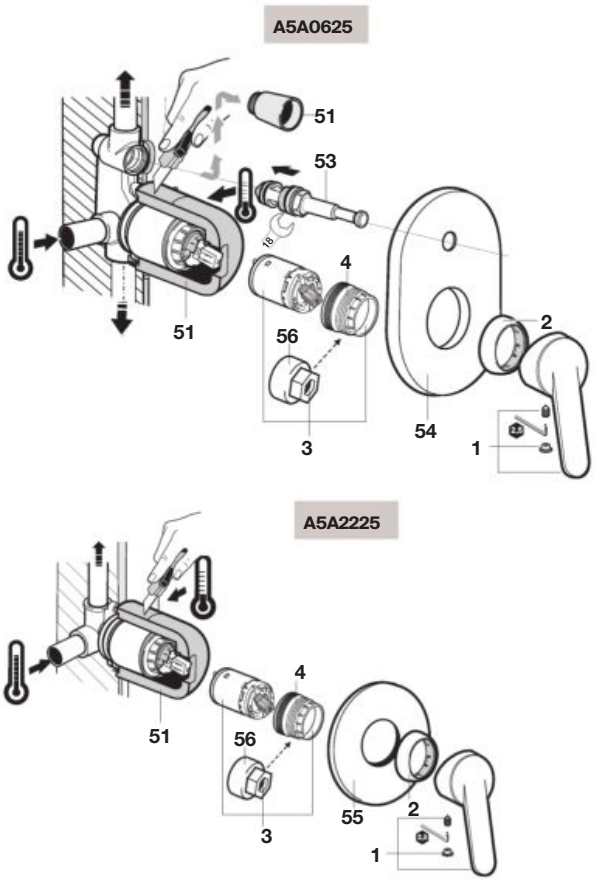

		€
1	**AG0003400R**	28,50
2	**AG0085300R**	18,00
3	**AG0077807R**	42,10
4	**A525023507**	4,23
5	**A525004700**	7,44
6	**AG0003600R**	7,61
7	**A525004403**	7,92
8	**AG0096409R**	13,90
9	**A525094707**	16,90
10	**A525010900**	6,24
11	**AG0075200R**	16,80
12	**AG0085700R**	16,20
13	**AG0163600R**	12,40

		€
14	**AG0200600R**	17,40
15	**AG0114300R**	4,44
16	**A525005507**	7,44
17	**A525005800**	7,44
18	**A525007700**	8,75
19	**AG0105900R**	8,97
20	**AG0103908R**	17,30
21	**AG0002500R**	15,60
22	**AG0085400R**	8,41
23	**AG0116700R**	4,36
24	**AG0116500R**	13,90
25	**AG0134907R**	6,77
26	**A525009800**	27,10

		€
27	**AG0036800R**	3,71
28	**AG0003500R**	12,00
29	**AG0024100R**	52,70
30	**AG0085500R**	13,50
31	**AG0001600R**	67,40
32	**AG0071500R**	27,10
33	**AG0114200R**	97,10
34	**AG0055100R**	23,50
35	**AG0002200R**	45,00
36	**AG0101207R**	2,35
37	**AG0085803R**	9,55
38	**AG0190200R**	65,30
39	**AG0004407R**	2,23

		€
40	**AG0085600R**	5,50
41	**AG0061409R**	31,90
42	**AG0122400R**	17,10
44	**AG0109709R**	8,77
45	**AG0000703R**	12,00
46	**AG0031700R**	26,70
47	**AG0078003R**	12,90
48	**A525008503**	8,41
49	**AG0118308R**	12,50
50	**A525005900**	59,20
51	**AG0001907R**	11,00
52	**A525006903**	8,56
53	**A525006500**	23,30

		€
54	**A525002700**	47,20
55	**A525002800**	37,60
56	**A525005407**	7,44
57	**AG0075300R**	28,80
58	**AG0096200R**	7,48
59	**A525087300**	18,90
60	**A525006600**	7,44
61	**A525023200**	11,90
62	**AG0096307R**	6,45
63	**AG0141207R**	19,20
64	**A525007800**	11,10

Loft

Grifería para lavabo y bidé / Basin and bidet faucet

A5A3043

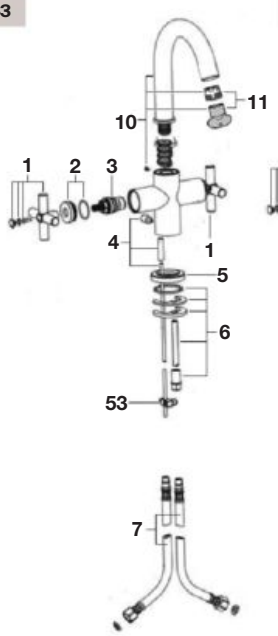

A5A6043

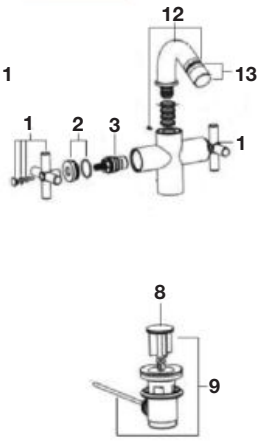

Grifería para lavabo y bidé / Basin and bidet faucet

A5A4443

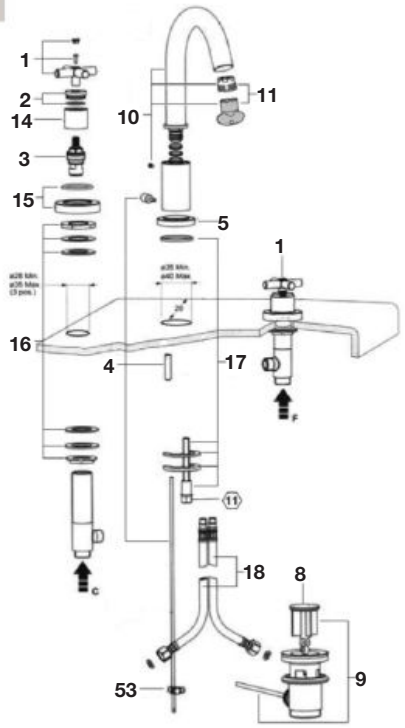

Antes 2007 / Before 2007

		€			€			€			€			€
1	**AG0239700R**	203,00	10	**AG0074300R**	298,00	20	**A525003907**	22,70	29	**AG0067000R**	58,50	38	**AG0021500R**	588,00
2	**AG0061500R**	41,70	11	**A525003907**	22,70	21	**AG0063400R**	25,80	30	**AG0078700R**	N.D.	39	**AG0064300R**	67,30
3	**A525092709**	73,20	12	**AG0074500R**	243,00	22	**AG0063200R**	25,60	31	**AG0076000R**	53,50	40	**AG0062800R**	52,80
4	**AG0065300R**	17,20	13	**AG0017900R**	13,20	23	**AG0063100R**	8,36	32	**AG0076103R**	38,90	41	**AG0065700R**	45,10
5	**AG0065500R**	16,30	14	**AG0062900R**	35,10	24	**AG0078500R**	26,70	33	**AG0064109R**	38,10	42	**AG0065100R**	35,90
6	**AG0078403R**	7,88	15	**AG0062800R**	52,80	25	**AG0063300R**	53,80	34	**AG0064200R**	33,30	43	**AG0064700R**	168,00
7	**AG0061409R**	31,90	16	**AG0062100R**	89,90	26	**AG0078600R**	27,00	35	**AG0063700R**	210,00	44	**AG0076200R**	62,10
8	**AG0067700R**	18,30	17	**AG0074603R**	20,70	27	**A505319400**	-	36	**AG0063800R**	35,10	53	**AG0084100R**	25,60
9	**AG0004700R**	60,30	18	**AG0061409R**	31,90	28	**A525009800**	27,10	37	**AG0065200R**	417,00			

Después 2007 / After 2007

		€			€			€			€			€
1	**AG0061600R**	51,20	14	**AG0062900R**	35,10	27	**A5B9047C00**	-	40	**AG0065000R**	63,10	53	**AG0084100R**	25,60
2	**AG0061500R**	41,70	15	**AG0062800R**	52,80	28	**A525009800**	27,10	41	**AG0064500R**	67,30	54	**AG0114100R**	116,00
3	**A525092709**	73,20	16	**AG0062100R**	89,90	29	**AG0068500R**	27,30	42	**AG0065100R**	35,90	55	**AG0134800R**	68,30
4	**AG0061300R**	15,90	17	**AG0078403R**	7,88	30	**AG0064900R**	258,00	43	**AG0074700R**	101,00	56	**AG0120800R**	91,40
5	**AG0061200R**	5,20	18	**AG0062409R**	37,20	31	**AG0064000R**	53,80	44	**AG0076200R**	62,10	57	**AG0239700R**	203,00
6	**A525006903**	8,56	19	**AG0063000R**	210,00	32	**AG0063903R**	39,90	45	**AG0064603R**	86,80	58	**AG0239800R**	36,80
7	**AG0061409R**	31,90	20	**A525004007**	16,70	33	**AG0064109R**	38,10	46	**AG0065100R**	35,90	59	**AG0063300R**	53,80
8	**AG0067700R**	18,30	21	**AG0063400R**	25,80	34	**AG0064200R**	33,30	47	**AG0064800R**	163,00	60	**AG0061500R**	41,70
9	**A525021200**	31,20	22	**AG0063200R**	25,60	35	**AG0063700R**	210,00	48	**AG0078600R**	27,00	61	**AG0239900R**	36,10
10	**AG0061700R**	69,90	23	**AG0063100R**	8,36	36	**AG0063800R**	35,10	49	**AG0064700R**	168,00	63	**AG0061500R**	41,70
11	**A525003907**	22,70	24	**AG0063600R**	13,50	37	**AG0065200R**	417,00	50	**AG0065600R**	92,90	64	**AG0199000R**	54,70
12	**AG0061100R**	N.D.	25	**AG0131800R**	45,80	38	**AG0021500R**	588,00	51	**AG0065400R**	65,20			
13	**AG0061000R**	29,10	26	**A525003807**	16,70	39	**AG0064300R**	67,30	52	**AG0065700R**	45,10			

Loft

Grifería empotrable para lavabo
Wall-mounted basin faucet

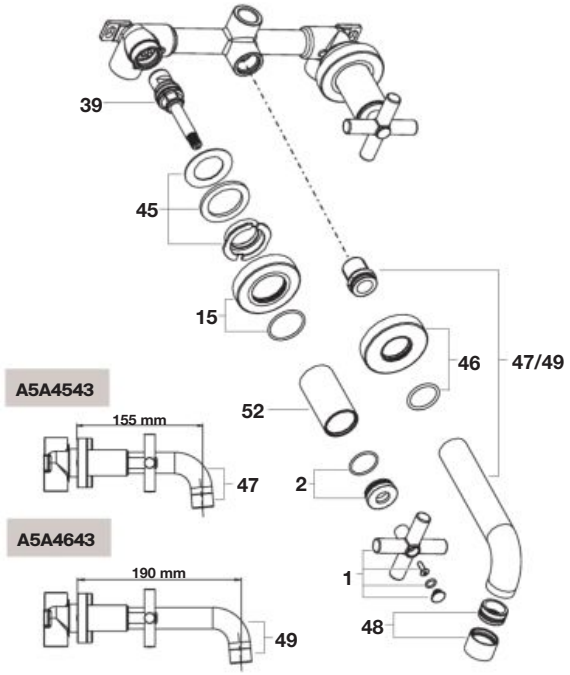

Grifería empotrable para lavabo
Wall-mounted basin faucet

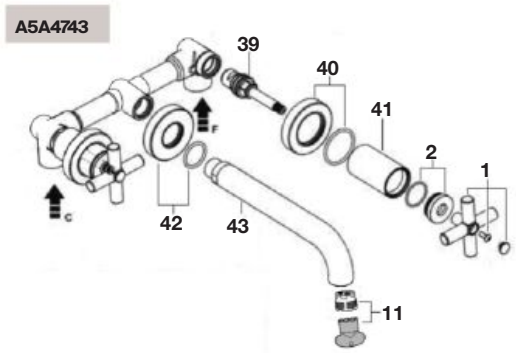

Antes 2007 / Before 2007

		€			€			€			€			€
1	**AG0239700R**	203,00	10	**AG0074300R**	298,00	20	**A525003907**	22,70	29	**AG0067000R**	58,50	38	**AG0021500R**	588,00
2	**AG0061500R**	41,70	11	**A525003907**	22,70	21	**AG0063400R**	25,80	30	**AG0078700R**	N.D.	39	**AG0064300R**	67,30
3	**A525092709**	73,20	12	**AG0074500R**	243,00	22	**AG0063200R**	25,60	31	**AG0076000R**	53,50	40	**AG0062800R**	52,80
4	**AG0065300R**	17,20	13	**AG0017900R**	13,20	23	**AG0063100R**	8,36	32	**AG0076103R**	38,90	41	**AG0065700R**	45,10
5	**AG0065500R**	16,30	14	**AG0062900R**	35,10	24	**AG0078500R**	26,70	33	**AG0064109R**	38,10	42	**AG0065100R**	35,90
6	**AG0078403R**	7,88	15	**AG0062800R**	52,80	25	**AG0063300R**	53,80	34	**AG0064200R**	33,30	43	**AG0064700R**	168,00
7	**AG0061409R**	31,90	16	**AG0062100R**	89,90	26	**AG0078600R**	27,00	35	**AG0063700R**	210,00	44	**AG0076200R**	62,10
8	**AG0067700R**	18,30	17	**AG0074603R**	20,70	27	**A505319400**	-	36	**AG0063800R**	35,10	53	**AG0084100R**	25,60
9	**AG0004700R**	60,30	18	**AG0061409R**	31,90	28	**A525009800**	27,10	37	**AG0065200R**	417,00			

Después 2007 / After 2007

		€			€			€			€			€
1	**AG0061600R**	51,20	14	**AG0062900R**	35,10	27	**A5B9047C00**	-	40	**AG0065000R**	63,10	53	**AG0084100R**	25,60
2	**AG0061500R**	41,70	15	**AG0062800R**	52,80	28	**A525009800**	27,10	41	**AG0064500R**	67,30	54	**AG0114100R**	116,00
3	**A525092709**	73,20	16	**AG0062100R**	89,90	29	**AG0068500R**	27,30	42	**AG0065100R**	35,90	55	**AG0134800R**	68,30
4	**AG0061300R**	15,90	17	**AG0078403R**	7,88	30	**AG0064900R**	258,00	43	**AG0074700R**	101,00	56	**AG0120800R**	91,40
5	**AG0061200R**	5,20	18	**AG0062409R**	37,20	31	**AG0064000R**	53,80	44	**AG0076200R**	62,10	57	**AG0239700R**	203,00
6	**A525006903**	8,56	19	**AG0063000R**	210,00	32	**AG0063903R**	39,90	45	**AG0064603R**	86,80	58	**AG0239800R**	36,80
7	**AG0061409R**	31,90	20	**A525004007**	16,70	33	**AG0064109R**	38,10	46	**AG0065100R**	35,90	59	**AG0063300R**	53,80
8	**AG0067700R**	18,30	21	**AG0063400R**	25,80	34	**AG0064200R**	33,30	47	**AG0064800R**	163,00	60	**AG0061500R**	41,70
9	**A525021200**	31,20	22	**AG0063200R**	25,60	35	**AG0063700R**	210,00	48	**AG0078600R**	27,00	61	**AG0239900R**	36,10
10	**AG0061700R**	69,90	23	**AG0063100R**	8,36	36	**AG0063800R**	35,10	49	**AG0064700R**	168,00	63	**AG0061500R**	41,70
11	**A525003907**	22,70	24	**AG0063600R**	13,50	37	**AG0065200R**	417,00	50	**AG0065600R**	92,90	64	**AG0199000R**	54,70
12	**AG0061100R**	N.D.	25	**AG0131800R**	45,80	38	**AG0021500R**	588,00	51	**AG0065400R**	65,20			
13	**AG0061000R**	29,10	26	**A525003807**	16,70	39	**AG0064300R**	67,30	52	**AG0065700R**	45,10			

Loft

Grifería para baño y ducha / Bath and shower faucet

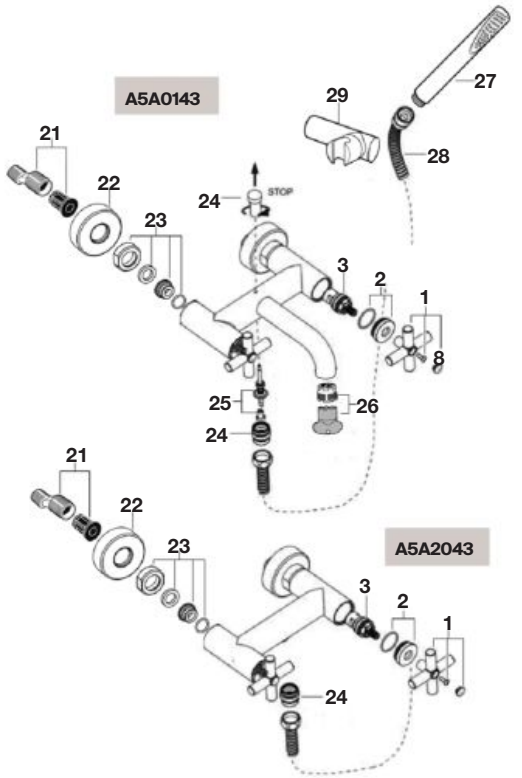

Grifería para baño y ducha / Bath and shower faucet

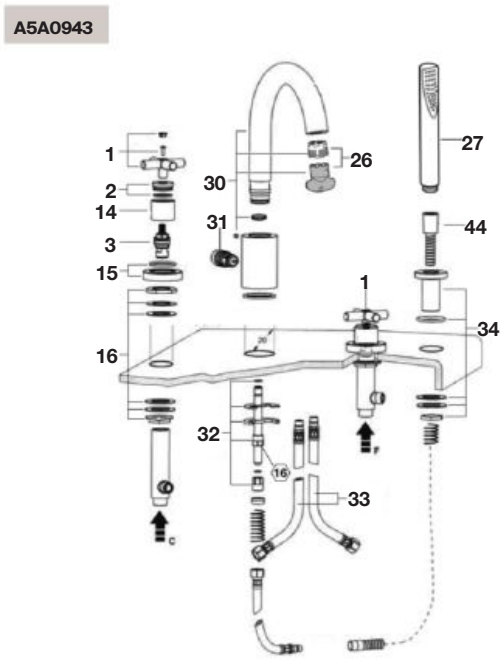

Antes 2007 / Before 2007

		€			€			€			€			€
1	**AG0239700R**	203,00	10	**AG0074300R**	298,00	20	**A525003907**	22,70	29	**AG0067000R**	58,50	38	**AG0021500R**	588,00
2	**AG0061500R**	41,70	11	**A525003907**	22,70	21	**AG0063400R**	25,80	30	**AG0078700R**	N.D.	39	**AG0064300R**	67,30
3	**A525092709**	73,20	12	**AG0074500R**	243,00	22	**AG0063200R**	25,60	31	**AG0076000R**	53,50	40	**AG0062800R**	52,80
4	**AG0065300R**	17,20	13	**AG0017900R**	13,20	23	**AG0063100R**	8,36	32	**AG0076103R**	38,90	41	**AG0065700R**	45,10
5	**AG0065500R**	16,30	14	**AG0062900R**	35,10	24	**AG0078500R**	26,70	33	**AG0064109R**	38,10	42	**AG0065100R**	35,90
6	**AG0078403R**	7,88	15	**AG0062800R**	52,80	25	**AG0063300R**	53,80	34	**AG0064200R**	33,30	43	**AG0064700R**	168,00
7	**AG0061409R**	31,90	16	**AG0062100R**	89,90	26	**AG0078600R**	27,00	35	**AG0063700R**	210,00	44	**AG0076200R**	62,10
8	**AG0067700R**	18,30	17	**AG0074603R**	20,70	27	**A505319400**	-	36	**AG0063800R**	35,10	53	**AG0084100R**	25,60
9	**AG0004700R**	60,30	18	**AG0061409R**	31,90	28	**A525009800**	27,10	37	**AG0065200R**	417,00			

Después 2007 / After 2007

		€			€			€			€			€
1	**AG0061600R**	51,20	14	**AG0062900R**	35,10	27	**A5B9047C00**	-	40	**AG0065000R**	63,10	53	**AG0084100R**	25,60
2	**AG0061500R**	41,70	15	**AG0062800R**	52,80	28	**A525009800**	27,10	41	**AG0064500R**	67,30	54	**AG0114100R**	116,00
3	**A525092709**	73,20	16	**AG0062100R**	89,90	29	**AG0068500R**	27,30	42	**AG0065100R**	35,90	55	**AG0134800R**	68,30
4	**AG0061300R**	15,90	17	**AG0078403R**	7,88	30	**AG0064900R**	258,00	43	**AG0074700R**	101,00	56	**AG0120800R**	91,40
5	**AG0061200R**	5,20	18	**AG0062409R**	37,20	31	**AG0064000R**	53,80	44	**AG0076200R**	62,10	57	**AG0239700R**	203,00
6	**A525006903**	8,56	19	**AG0063000R**	210,00	32	**AG0063903R**	39,90	45	**AG0064603R**	86,80	58	**AG0239800R**	36,80
7	**AG0061409R**	31,90	20	**A525004007**	16,70	33	**AG0064109R**	38,10	46	**AG0065100R**	35,90	59	**AG0063300R**	53,80
8	**AG0067700R**	18,30	21	**AG0063400R**	25,80	34	**AG0064200R**	33,30	47	**AG0064800R**	163,00	60	**AG0061500R**	41,70
9	**A525021200**	31,20	22	**AG0063200R**	25,60	35	**AG0063700R**	210,00	48	**AG0078600R**	27,00	61	**AG0239900R**	36,10
10	**AG0061700R**	69,90	23	**AG0063100R**	8,36	36	**AG0063800R**	35,10	49	**AG0064700R**	168,00	63	**AG0061500R**	41,70
11	**A525003907**	22,70	24	**AG0063600R**	13,50	37	**AG0065200R**	417,00	50	**AG0065600R**	92,90	64	**AG0199000R**	54,70
12	**AG0061100R**	N.D.	25	**AG0131800R**	45,80	38	**AG0021500R**	588,00	51	**AG0065400R**	65,20			
13	**AG0061000R**	29,10	26	**A525003807**	16,70	39	**AG0064300R**	67,30	52	**AG0065700R**	45,10			

Loft

Grifería para baño y ducha / Bath and shower faucet

A5A2743

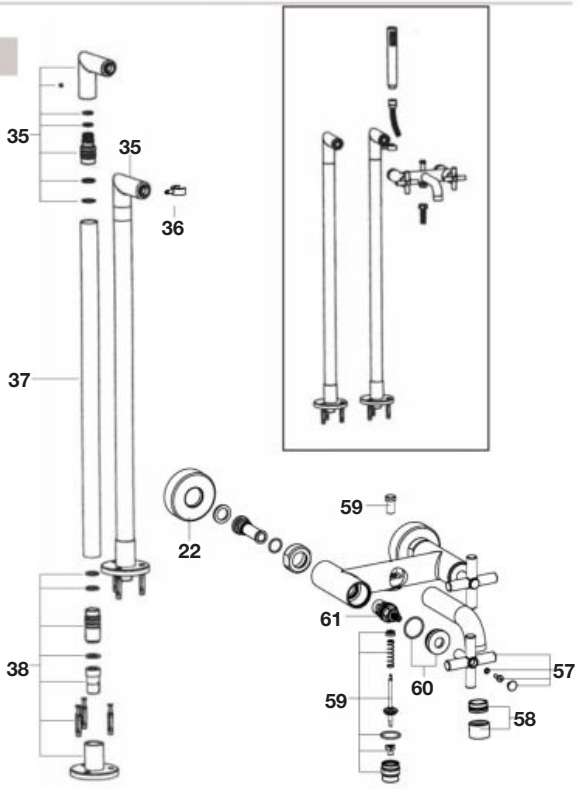

Grifería para cocina / Kitchen faucet

A5A8443

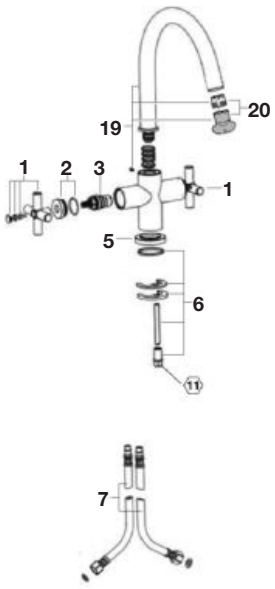

Antes 2007 / Before 2007

		€
1	AG0239700R	203,00
2	AG0061500R	41,70
3	A525092709	73,20
4	AG0065300R	17,20
5	AG0065500R	16,30
6	AG0078403R	7,88
7	AG0061409R	31,90
8	AG0067700R	18,30
9	AG0004700R	60,30
10	AG0074300R	298,00
11	A525003907	22,70

			€
12		AG0074500R	243,00
13		AG0017900R	13,20
14		AG0062900R	35,10
15		AG0062800R	52,80
16		AG0062100R	89,90
17		AG0074603R	20,70
18		AG0061409R	31,90
20		A525003907	22,70
21		AG0063400R	25,80
22	2 un	AG0063200R	25,60
23		AG0063100R	8,36

		€
24	AG0078500R	26,70
25	AG0063300R	53,80
26	AG0078600R	27,00
27	A505319400	-
28	A525009800	27,10
29	AG0067000R	58,50
30	AG0078700R	N.D.
31	AG0076000R	53,50
32	AG0076103R	38,90
33	AG0064109R	38,10
34	AG0064200R	33,30

		€
35	AG0063700R	210,00
36	AG0063800R	35,10
37	AG0065200R	417,00
38	AG0021500R	588,00
39	AG0064300R	67,30
40	AG0062800R	52,80
41	AG0065700R	45,10
42	AG0065100R	35,90
43	AG0064700R	168,00
44	AG0076200R	62,10
53	AG0084100R	25,60

Después 2007 / After 2007

		€
1	AG0061600R	51,20
2	AG0061500R	41,70
3	A525092709	73,20
4	AG0061300R	15,90
5	AG0061200R	5,20
6	A525006903	8,56
7	AG0061409R	31,90
8	AG0067700R	18,30
9	A525021200	31,20
10	AG0061700R	69,90
11	A525003907	22,70
12	AG0061100R	N.D.
13	AG0061000R	29,10

		€
14	AG0062900R	35,10
15	AG0062800R	52,80
16	AG0062100R	89,90
17	AG0078403R	7,88
18	AG0062409R	37,20
19	AG0063000R	210,00
20	A525004007	16,70
21	AG0063400R	25,80
22	AG0063200R	25,60
23	AG0063100R	8,36
24	AG0063600R	13,50
25	AG0131800R	45,80
26	A525003807	16,70

		€
27	A5B9047C00	-
28	A525009800	27,10
29	AG0068500R	27,30
30	AG0064900R	258,00
31	AG0064000R	53,80
32	AG0063903R	39,90
33	AG0064109R	38,10
34	AG0064200R	33,30
35	AG0063700R	210,00
36	AG0063800R	35,10
37	AG0065200R	417,00
38	AG0021500R	588,00
39	AG0064300R	67,30

		€
40	AG0065000R	63,10
41	AG0064500R	67,30
42	AG0065100R	35,90
43	AG0074700R	101,00
44	AG0076200R	62,10
45	AG0064603R	86,80
46	AG0065100R	35,90
47	AG0064800R	163,00
48	AG0078600R	27,00
49	AG0064700R	168,00
50	AG0065600R	92,90
51	AG0065400R	65,20
52	AG0065700R	45,10

		€
53	AG0084100R	25,60
54	AG0114100R	116,00
55	AG0134800R	68,30
56	AG0120800R	91,40
57	AG0239700R	203,00
58	AG0239800R	36,80
59	AG0063300R	53,80
60	AG0061500R	41,70
61	AG0239900R	36,10
63	AG0061500R	41,70
64	AG0199000R	54,70

Loft

Inversor 1/2” baño o ducha
Bath or shower 1/2” diverter

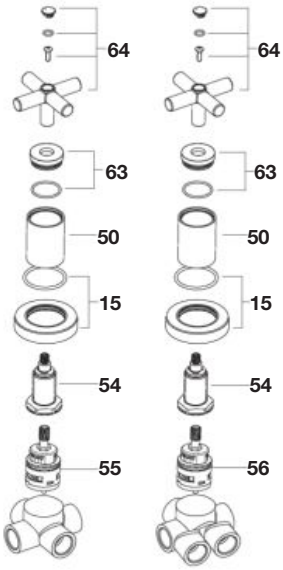

A5A9043 **A5A9143**

Llaves de paso de 1/2”
Build in 1/2” valve

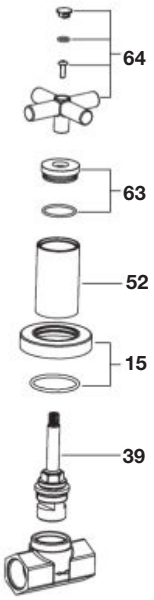

A5A1543
A5A1843

Llaves de paso de 3/4”
Build in 3/4” valve

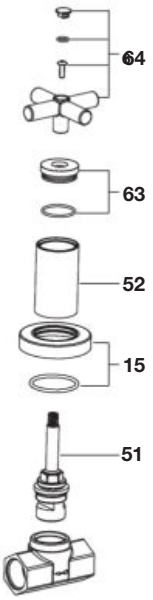

A5A1643
A5A1943

Antes 2007 / Before 2007

		€			€			€			€			€
1	**AG0239700R**	203,00	10	**AG0074300R**	298,00	20	**A525003907**	22,70	29	**AG0067000R**	58,50	38	**AG0021500R**	588,00
2	**AG0061500R**	41,70	11	**A525003907**	22,70	21	**AG0063400R**	25,80	30	**AG0078700R**	N.D.	39	**AG0064300R**	67,30
3	**A525092709**	73,20	12	**AG0074500R**	243,00	22	**AG0063200R**	25,60	31	**AG0076000R**	53,50	40	**AG0062800R**	52,80
4	**AG0065300R**	17,20	13	**AG0017900R**	13,20	23	**AG0063100R**	8,36	32	**AG0076103R**	38,90	41	**AG0065700R**	45,10
5	**AG0065500R**	16,30	14	**AG0062900R**	35,10	24	**AG0078500R**	26,70	33	**AG0064109R**	38,10	42	**AG0065100R**	35,90
6	**AG0078403R**	7,88	15	**AG0062800R**	52,80	25	**AG0063300R**	53,80	34	**AG0064200R**	33,30	43	**AG0064700R**	168,00
7	**AG0061409R**	31,90	16	**AG0062100R**	89,90	26	**AG0078600R**	27,00	35	**AG0063700R**	210,00	44	**AG0076200R**	62,10
8	**AG0067700R**	18,30	17	**AG0074603R**	20,70	27	**A505319400**	-	36	**AG0063800R**	35,10	53	**AG0084100R**	25,60
9	**AG0004700R**	60,30	18	**AG0061409R**	31,90	28	**A525009800**	27,10	37	**AG0065200R**	417,00			

Después 2007 / After 2007

		€			€			€			€			€
1	**AG0061600R**	51,20	14	**AG0062900R**	35,10	27	**A5B9047C00**	-	40	**AG0065000R**	63,10	53	**AG0084100R**	25,60
2	**AG0061500R**	41,70	15	**AG0062800R**	52,80	28	**A525009800**	27,10	41	**AG0064500R**	67,30	54	**AG0114100R**	116,00
3	**A525092709**	73,20	16	**AG0062100R**	89,90	29	**AG0068500R**	27,30	42	**AG0065100R**	35,90	55	**AG0134800R**	68,30
4	**AG0061300R**	15,90	17	**AG0078403R**	7,88	30	**AG0064900R**	258,00	43	**AG0074700R**	101,00	56	**AG0120800R**	91,40
5	**AG0061200R**	5,20	18	**AG0062409R**	37,20	31	**AG0064000R**	53,80	44	**AG0076200R**	62,10	57	**AG0239700R**	203,00
6	**A525006903**	8,56	19	**AG0063000R**	210,00	32	**AG0063903R**	39,90	45	**AG0064603R**	86,80	58	**AG0239800R**	36,80
7	**AG0061409R**	31,90	20	**A525004007**	16,70	33	**AG0064109R**	38,10	46	**AG0065100R**	35,90	59	**AG0063300R**	53,80
8	**AG0067700R**	18,30	21	**AG0063400R**	25,80	34	**AG0064200R**	33,30	47	**AG0064800R**	163,00	60	**AG0061500R**	41,70
9	**A525021200**	31,20	22	**AG0063200R**	25,60	35	**AG0063700R**	210,00	48	**AG0078600R**	27,00	61	**AG0239900R**	36,10
10	**AG0061700R**	69,90	23	**AG0063100R**	8,36	36	**AG0063800R**	35,10	49	**AG0064700R**	168,00	63	**AG0061500R**	41,70
11	**A525003907**	22,70	24	**AG0063600R**	13,50	37	**AG0065200R**	417,00	50	**AG0065600R**	92,90	64	**AG0199000R**	54,70
12	**AG0061100R**	N.D.	25	**AG0131800R**	45,80	38	**AG0021500R**	588,00	51	**AG0065400R**	65,20			
13	**AG0061000R**	29,10	26	**A525003807**	16,70	39	**AG0064300R**	67,30	52	**AG0065700R**	45,10			

Carmen

Grifería para lavabo / Basin faucet

A5A304B
A5A314B

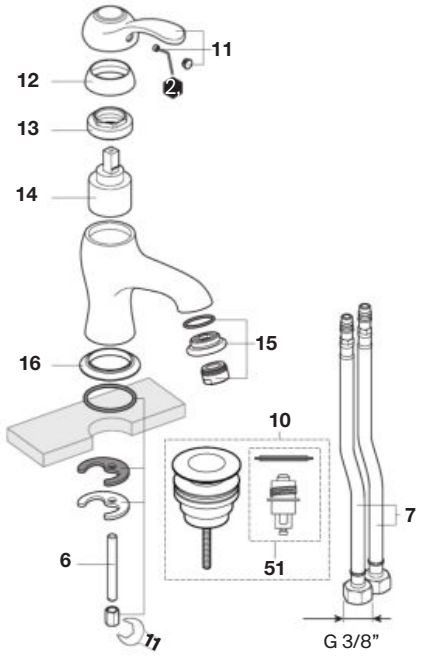

Grifería para lavabo / Basin faucet

A5A3B4B
A5A3A4B

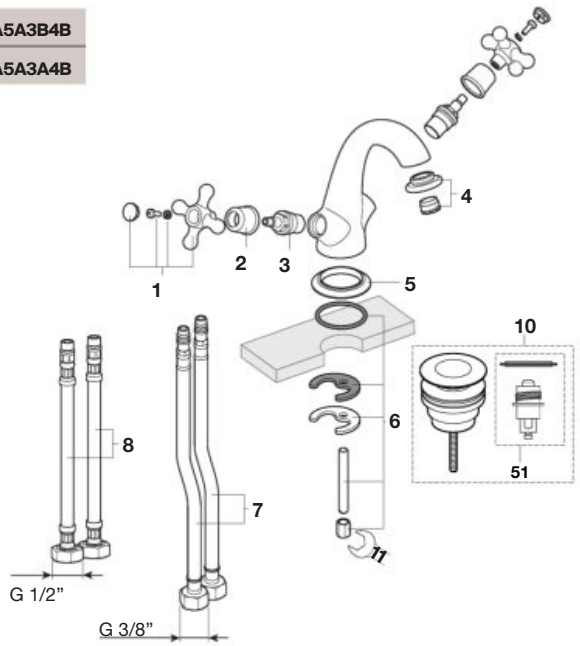

Grifería para cocina / Kitchen faucet

A5A844B

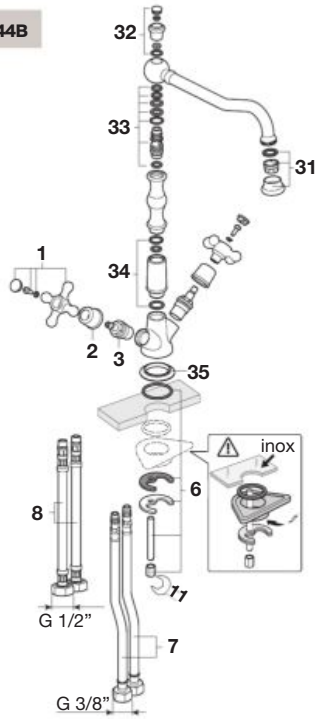

Grifería para cocina / Kitchen faucet

A5A384B

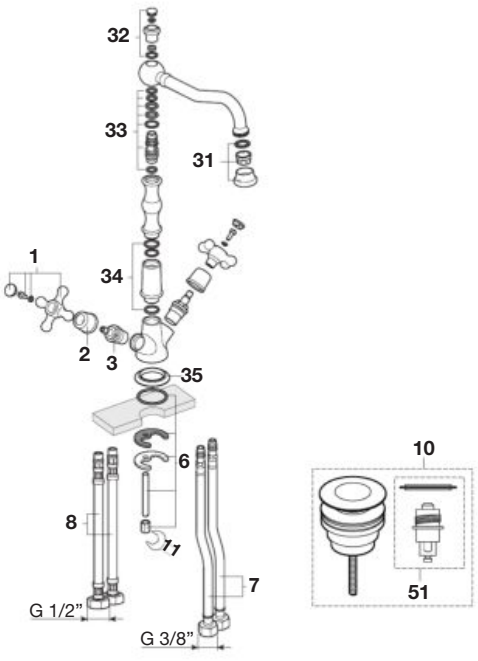

		€
1	**AG0166000R**	31,70
2	**AG0166100R**	9,74
3	**AG0166200R**	19,90
4	**AG0166300R**	19,40
5	**AG0166400R**	3,98
6	**AG0166500R**	6,85
7	**AG0166800R**	18,20
8	**AG0166900R**	20,60
9	**AG0167000R**	30,60
10	**AG0167100R**	38,30
11	**AG0167200R**	26,70

		€
12	**AG0167300R**	8,95
13	**AG0167400R**	6,95
14	**AG0167500R**	13,90
15	**AG0167600R**	14,10
16	**AG0167700R**	7,89
17	**AG0167800R**	20,80
18	**AG0167900R**	23,80
19	**AG0168000R**	32,90
20	**AG0168100R**	10,70
21	**AG0168200R**	18,20
22	**AG0168300R**	17,40

		€
23	**AG0168400R**	21,50
24	**AG0168500R**	6,02
25	**AG0168600R**	7,35
26	**AG0168700R**	20,00
27	**A5B114BC00**	-
28	**AG0168800R**	22,30
29	**AG0168900R**	60,00
30	**AG0169000R**	17,00
31	**AG0169100R**	17,10
32	**AG0169200R**	9,44
33	**AG0169300R**	18,20

		€
34	**AG0169400R**	2,65
35	**AG0169500R**	11,80
36	**AG0169600R**	19,60
37	**AG0169700R**	22,60
38	**AG0169800R**	17,60
39	**AG0169900R**	17,60
40	**AG0170000R**	18,60
41	**AG0172400R**	17,10
42	**AG0170200R**	16,80
43	**AG0172500R**	2,85
44	**AG0170100R**	11,60

		€
45	**AG0172600R**	2,03
46	**AG0170300R**	11,90
47	**AG0170400R**	8,86
48	**AG0170500R**	22,30
49	**AG0170700R**	15,50
50	**AG0170800R**	6,30
51	**AG0270900R**	315,00

Carmen

Grifería bimando empotrable para lavabo / Basin wall-mounted twin-lever faucet

A5A474B

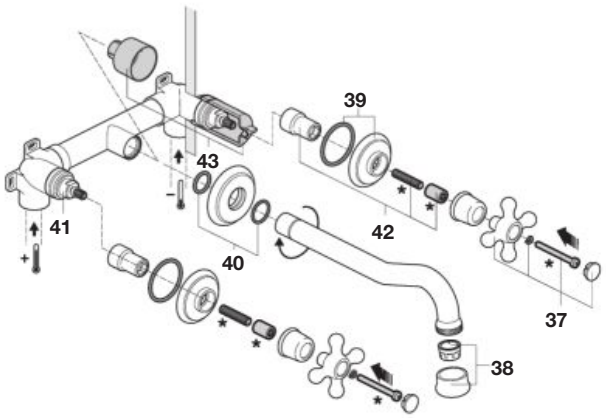

Grifería bimando de repisa para lavabo / Basin deck-mounted twin-lever faucet

A5A444B
A5A094B

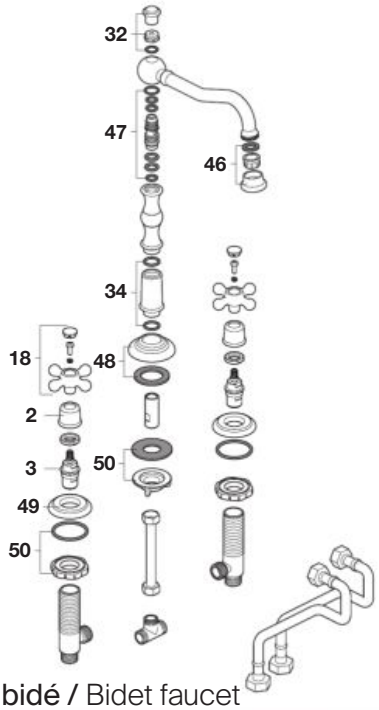

Grifería para bidé / Bidet faucet

A5A604B

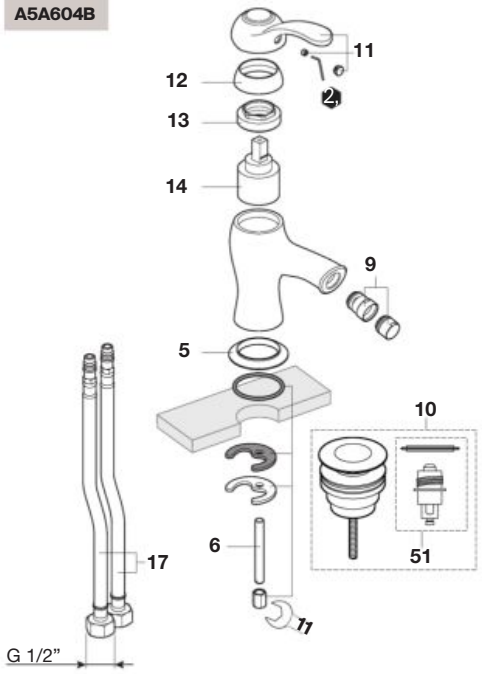

Grifería para bidé / Bidet faucet

A5A6A4B

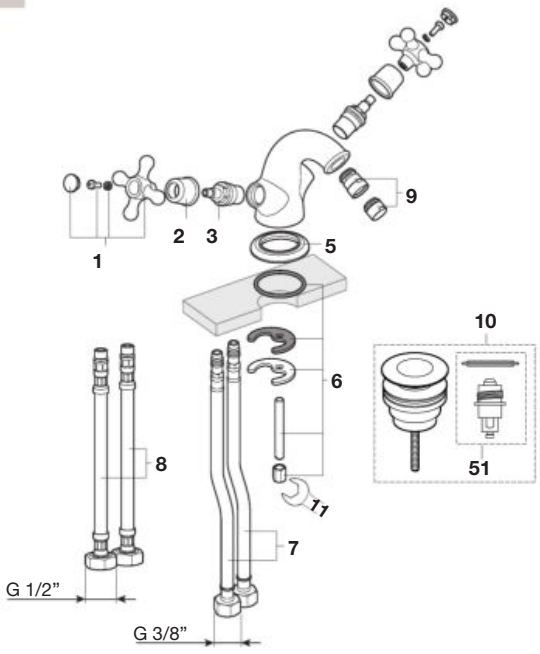

		€
1	**AG0166000R**	31,70
2	**AG0166100R**	9,74
3	**AG0166200R**	19,90
4	**AG0166300R**	19,40
5	**AG0166400R**	3,98
6	**AG0166500R**	6,85
7	**AG0166800R**	18,20
8	**AG0166900R**	20,60
9	**AG0167000R**	30,60
10	**AG0167100R**	38,30

		€
11	**AG0167200R**	26,70
12	**AG0167300R**	8,95
13	**AG0167400R**	6,95
14	**AG0167500R**	13,90
15	**AG0167600R**	14,10
16	**AG0167700R**	7,89
17	**AG0167800R**	20,80
18	**AG0167900R**	23,80
19	**AG0168000R**	32,90
20	**AG0168100R**	10,70

		€
21	**AG0168200R**	18,20
22	**AG0168300R**	17,40
23	**AG0168400R**	21,50
24	**AG0168500R**	6,02
25	**AG0168600R**	7,35
26	**AG0168700R**	20,00
28	**AG0168800R**	22,30
29	**AG0168900R**	60,00
30	**AG0169000R**	17,00
31	**AG0169100R**	17,10

		€
32	**AG0169200R**	9,44
33	**AG0169300R**	18,20
34	**AG0169400R**	2,65
35	**AG0169500R**	11,80
36	**AG0169600R**	19,60
37	**AG0169700R**	22,60
38	**AG0169800R**	17,60
39	**AG0169900R**	17,60
40	**AG0170000R**	18,60
41	**AG0172400R**	17,10

		€
42	**AG0170200R**	16,80
43	**AG0172500R**	2,85
44	**AG0170100R**	11,60
45	**AG0172600R**	2,03
46	**AG0170300R**	11,90
47	**AG0170400R**	8,86
48	**AG0170500R**	22,30
49	**AG0170700R**	15,50
50	**AG0170800R**	6,30
51	**AG0270900R**	315,00

Carmen

Grifería para baño-ducha / Bath and shower faucet

A5A014B

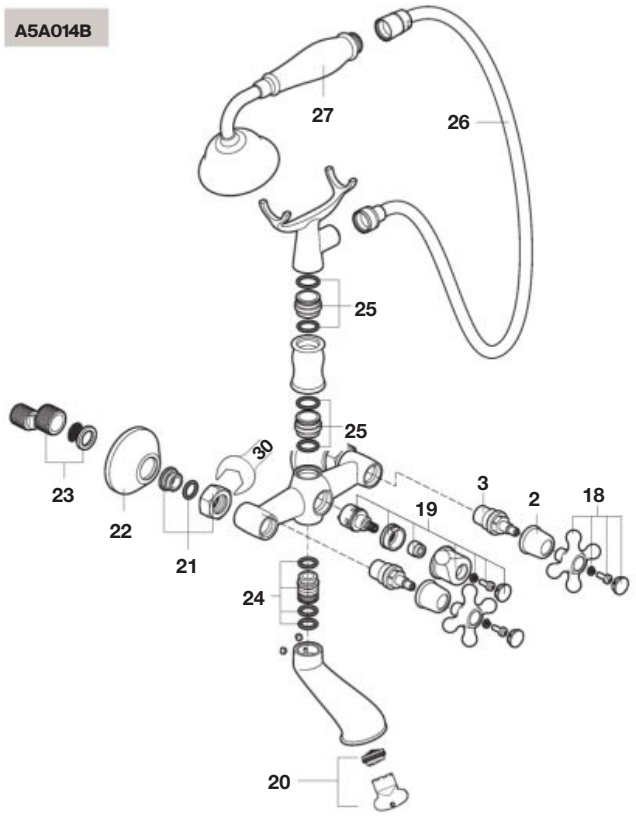

Grifería para ducha / Shower faucet

A5A204B

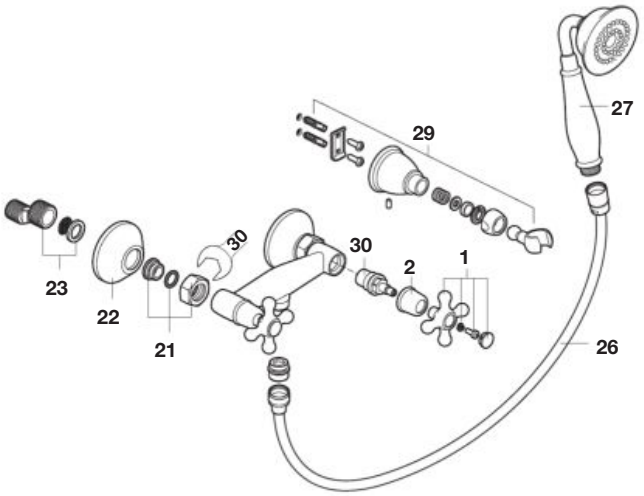

Llave de paso recto de 1/2" / Build in 1/2" valve

A5A154B

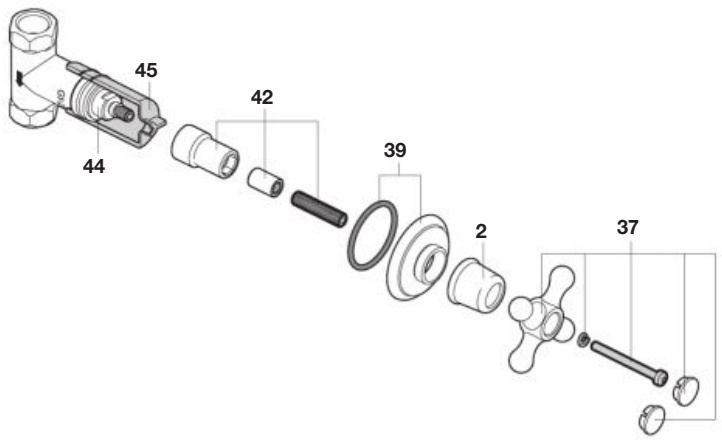

		€
1	**AG0166000R**	31,70
2	**AG0166100R**	9,74
3	**AG0166200R**	19,90
4	**AG0166300R**	19,40
5	**AG0166400R**	3,98
6	**AG0166500R**	6,85
7	**AG0166800R**	18,20
8	**AG0166900R**	20,60
9	**AG0167000R**	30,60
10	**AG0167100R**	38,30

		€
11	**AG0167200R**	26,70
12	**AG0167300R**	8,95
13	**AG0167400R**	6,95
14	**AG0167500R**	13,90
15	**AG0167600R**	14,10
16	**AG0167700R**	7,89
17	**AG0167800R**	20,80
18	**AG0167900R**	23,80
19	**AG0168000R**	32,90
20	**AG0168100R**	10,70

		€
21	**AG0168200R**	18,20
22	**AG0168300R**	17,40
23	**AG0168400R**	21,50
24	**AG0168500R**	6,02
25	**AG0168600R**	7,35
26	**AG0168700R**	20,00
27	**A5B114BC00**	-
28	**AG0168800R**	22,30
29	**AG0168900R**	60,00
30	**AG0169000R**	17,00

		€
31	**AG0169100R**	17,10
32	**AG0169200R**	9,44
33	**AG0169300R**	18,20
34	**AG0169400R**	2,65
35	**AG0169500R**	11,80
36	**AG0169600R**	19,60
37	**AG0169700R**	22,60
38	**AG0169800R**	17,60
39	**AG0169900R**	17,60
40	**AG0170000R**	18,60

		€
41	**AG0172400R**	17,10
42	**AG0170200R**	16,80
43	**AG0172500R**	2,85
44	**AG0170100R**	11,60
45	**AG0172600R**	2,03
46	**AG0170300R**	11,90
47	**AG0170400R**	8,86
48	**AG0170500R**	22,30
49	**AG0170700R**	15,50
50	**AG0170800R**	6,30

Brava-N

Grifería para lavabo / Basin faucet

A5A318EC00

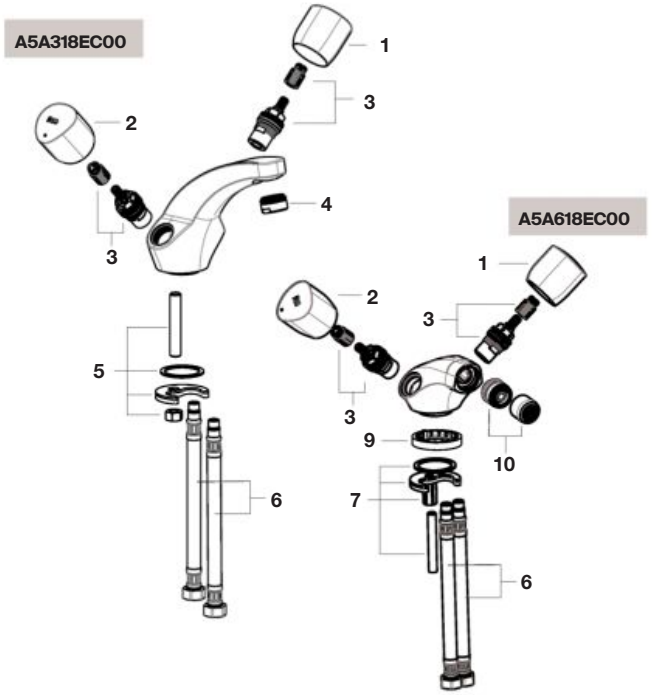

Grifería para lavabo / Basin faucet

A5A428EC00
A5A438EC00

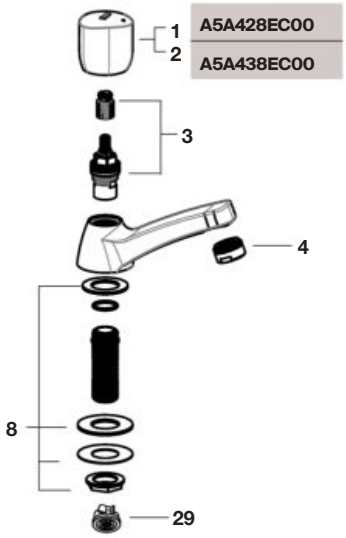

Grifería para lavabo / Basin faucet

A5A368EC00

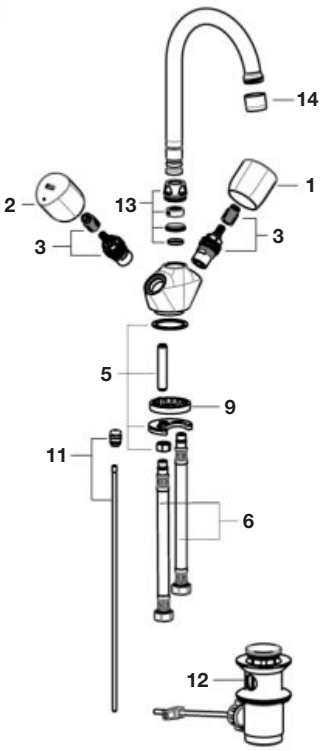

Grifería para baño y ducha / Bath and shower faucet

A5A018EC00

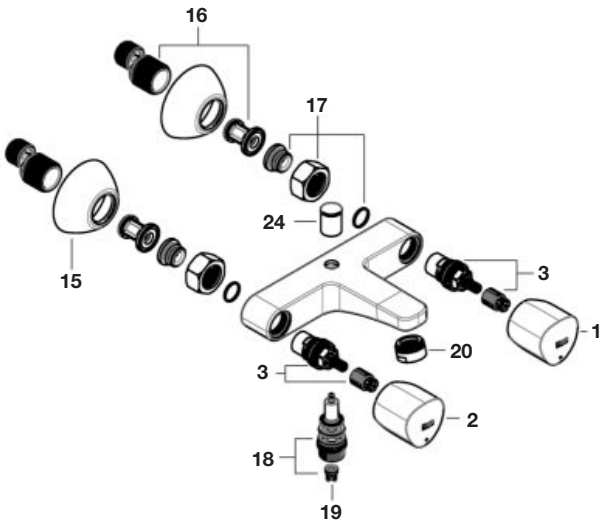

			€
1		**AG0234500R**	52,00
2		**AG0234600R**	52,00
3		**AG0234700R**	37,60
4		**A525004700**	7,44
5		**AG0045903R**	10,30
6		**AG0009209R**	17,70
7		**AG0234800R**	51,70
8		**AG0049803R**	12,00

			€
9		**AG0234900R**	1,80
10		**A525010900**	6,24
11		**AG0046000R**	6,14
12		**AG0075200R**	16,80
13		**AG0176400R**	5,44
14		**A525006600**	7,44
15	2 un	**AG0085400R**	8,41
16	2 un	**AG0103908R**	17,30

			€
17		**AG0235000R**	19,20
18		**AG0116500R**	13,90
19	2 un	**AG0134907R**	6,77
20		**A525004700**	7,44
21		**AG0036800R**	3,71
22	2 un	**A525005507**	7,44
23		**AG0050603R**	3,88
24		**AG0116700R**	4,36

			€
25		**AG0235100R**	15,30
27		**AG0050700R**	7,73
28		**AG0176200R**	36,70
29		**AG0050800R**	16,10
30		**AG0235300R**	22,10

Brava-N

Grifería para ducha / Shower faucet

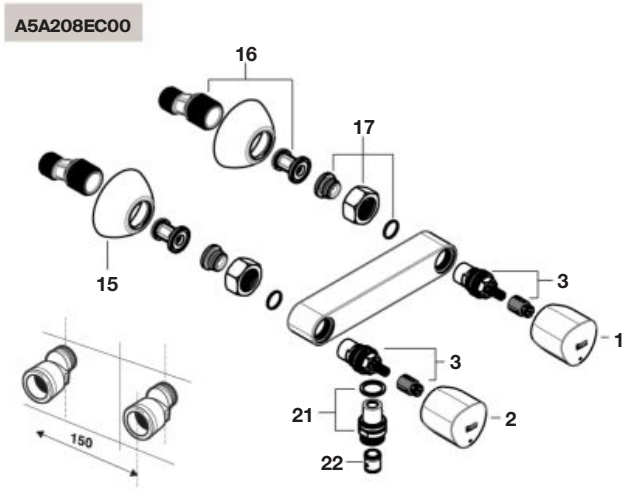

Grifería para lavabo / Basin faucet

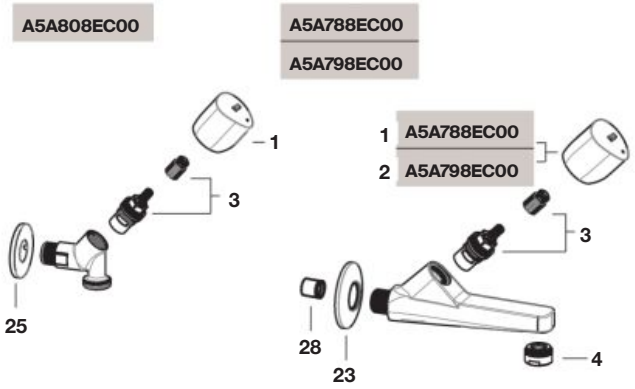

Grifería para bide / Bidet faucet

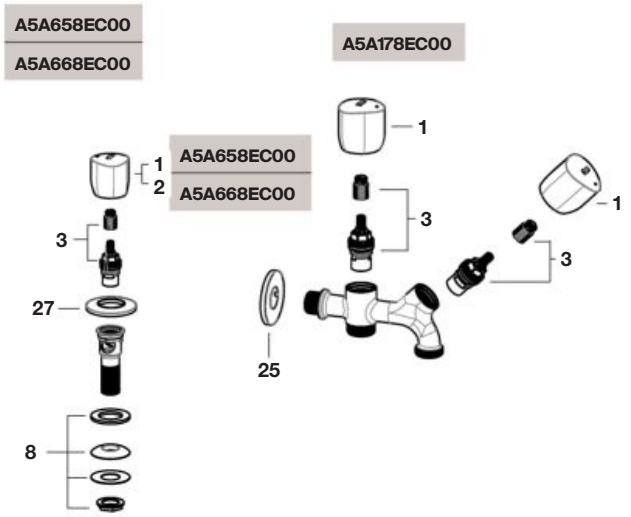

Grifería para cocina / Kitchen faucet

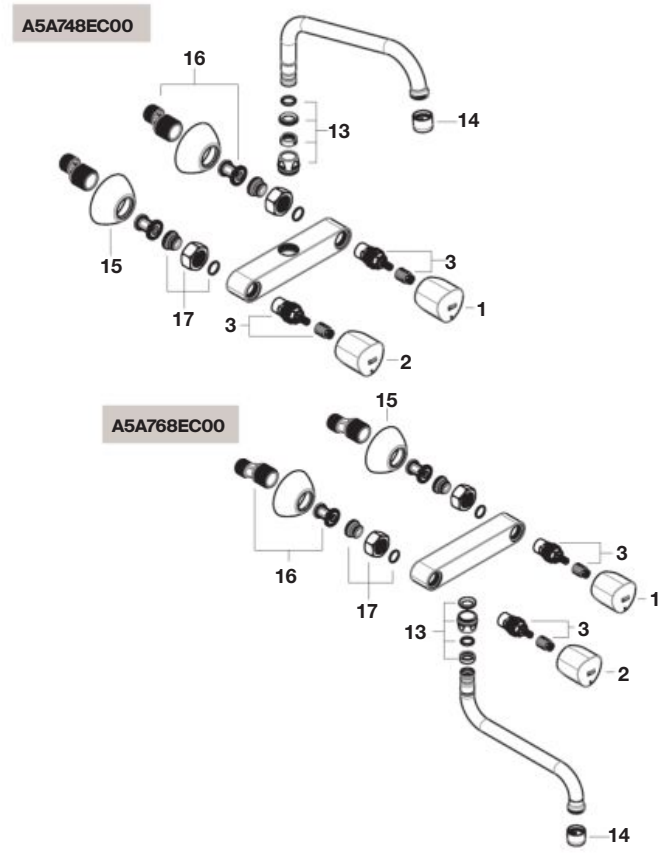

			€
1		AG0234500R	52,00
2		AG0234600R	52,00
3		AG0234700R	37,60
4		A525004700	7,44
5		AG0045903R	10,30
6		AG0009209R	17,70
7		AG0234800R	51,70
8		AG0049803R	12,00

			€
9		AG0234900R	1,80
10		A525010900	6,24
11		AG0046000R	6,14
12		AG0075200R	16,80
13		AG0176400R	5,44
14		A525006600	7,44
15	2 un	AG0085400R	8,41
16	2 un	AG0103908R	17,30

			€
17		AG0235000R	19,20
18		AG0116500R	13,90
19	2 un	AG0134907R	6,77
20		A525004700	7,44
21		AG0036800R	3,71
22	2 un	A525005507	7,44
23		AG0050603R	3,88
24		AG0116700R	4,36

			€
25		AG0235100R	15,30
27		AG0050700R	7,73
28		AG0176200R	36,70
29		AG0050800R	16,10
30		AG0235300R	22,10

Brava-N

Grifería para cocina / Kitchen faucet

A5A848EC00

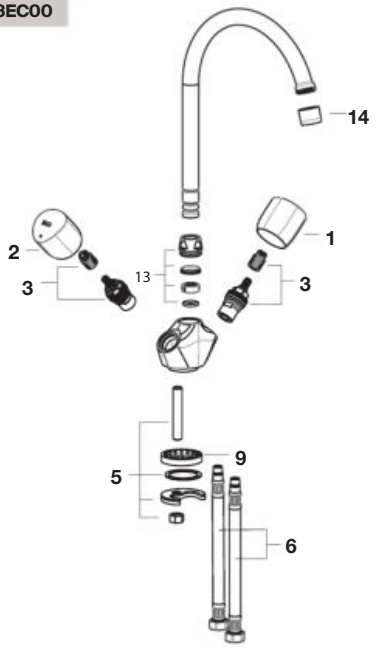

Grifería para cocina / Kitchen faucet

A5A858EC00

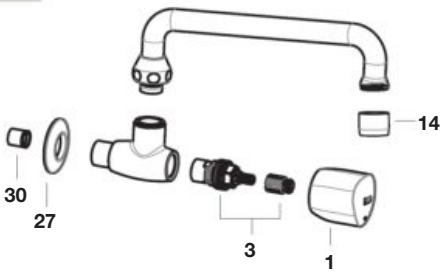

A5A878EC00

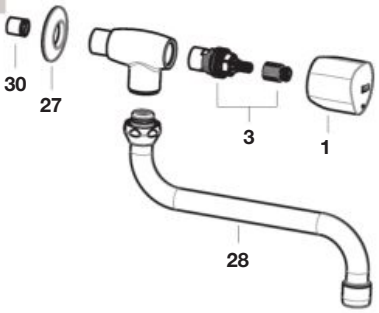

Grifería para cocina / Kitchen faucet

A5A518EC00

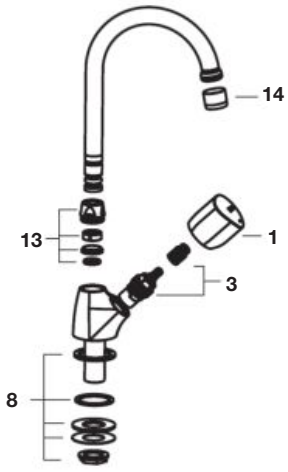

A5A868EC00

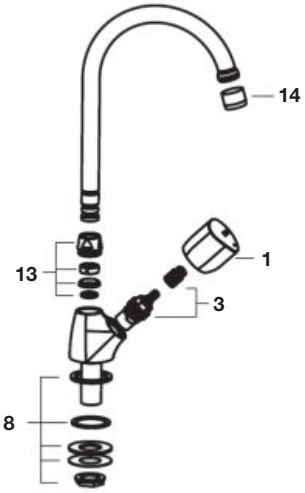

Llave de paso / Valve

A5A168EC00
A5A198EC00

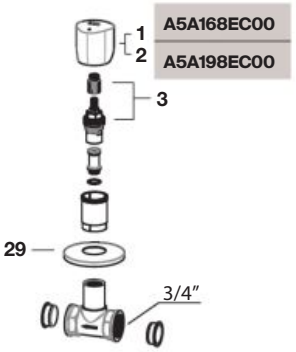

A5A158EC00
A5A188EC00

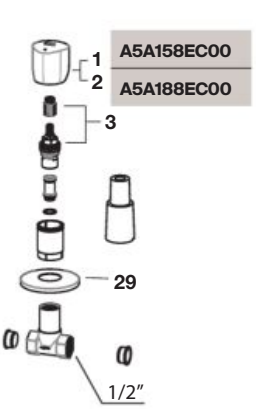

			€
1		**AG0234500R**	52,00
2		**AG0234600R**	52,00
3		**AG0234700R**	37,60
4		**A525004700**	7,44
5		**AG0045903R**	10,30
6		**AG0009209R**	17,70
7		**AG0234800R**	51,70
8		**AG0049803R**	12,00

			€
9		**AG0234900R**	1,80
10		**A525010900**	6,24
11		**AG0046000R**	6,14
12		**AG0075200R**	16,80
13		**AG0176400R**	5,44
14		**A525006600**	7,44
15	2 un	**AG0085400R**	8,41
16	2 un	**AG0103908R**	17,30

			€
17		**AG0235000R**	19,20
18		**AG0116500R**	13,90
19	2 un	**AG0134907R**	6,77
20		**A525004700**	7,44
21		**AG0036800R**	3,71
22	2 un	**A525005507**	7,44
23		**AG0050603R**	3,88
24		**AG0116700R**	4,36

		€
25	**AG0235100R**	15,30
27	**AG0050700R**	7,73
28	**AG0176200R**	36,70
29	**AG0050800R**	16,10
30	**AG0235300R**	22,10

Termostatos Gran Caudal
High flow thermostat

Termostato central Gran Caudal / Central high flow thermostat

A5A9A4AC00	ROUND
A5A9B4AC00	SQUARE

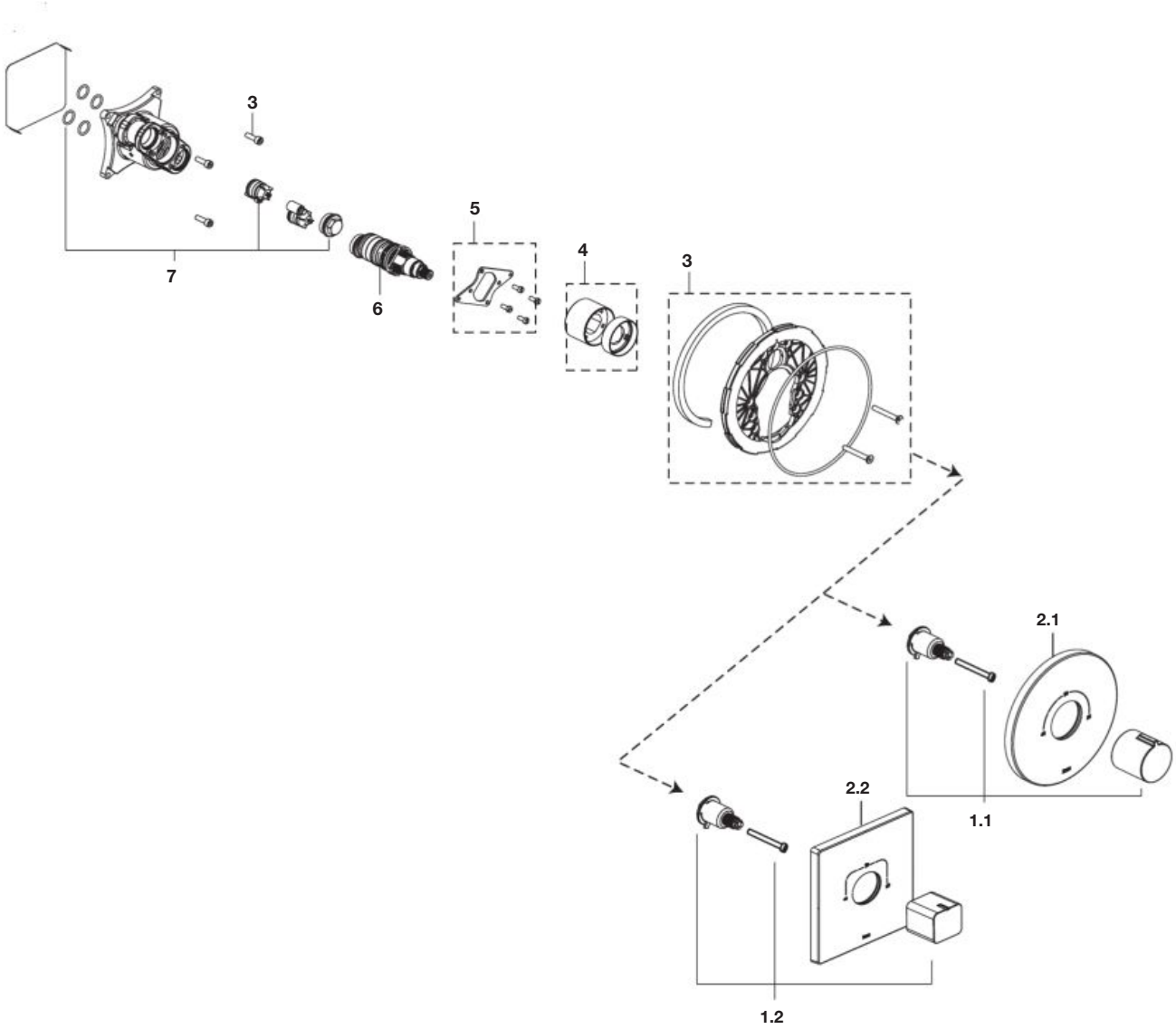

			€
1.1	**AG0157300R**	Round	38,60
1.2	**AG0157400R**	Square	46,20
2.1	**AG0157500R**	Round	22,90
2.2	**AG0157600R**	Square	31,20
3	**AG0120900R**		23,50

		€
4	**AG0157200R**	7,00
5	**AG0157100R**	12,80
6	**AG0157000R**	69,40
7	**AG0132107R**	41,70

T-3000 Switch

Grifería termostática para baño y ducha / Bath & shower thermostatic faucet

A5A2K09..0	ROUND
A5A2I09..0	SQUARE

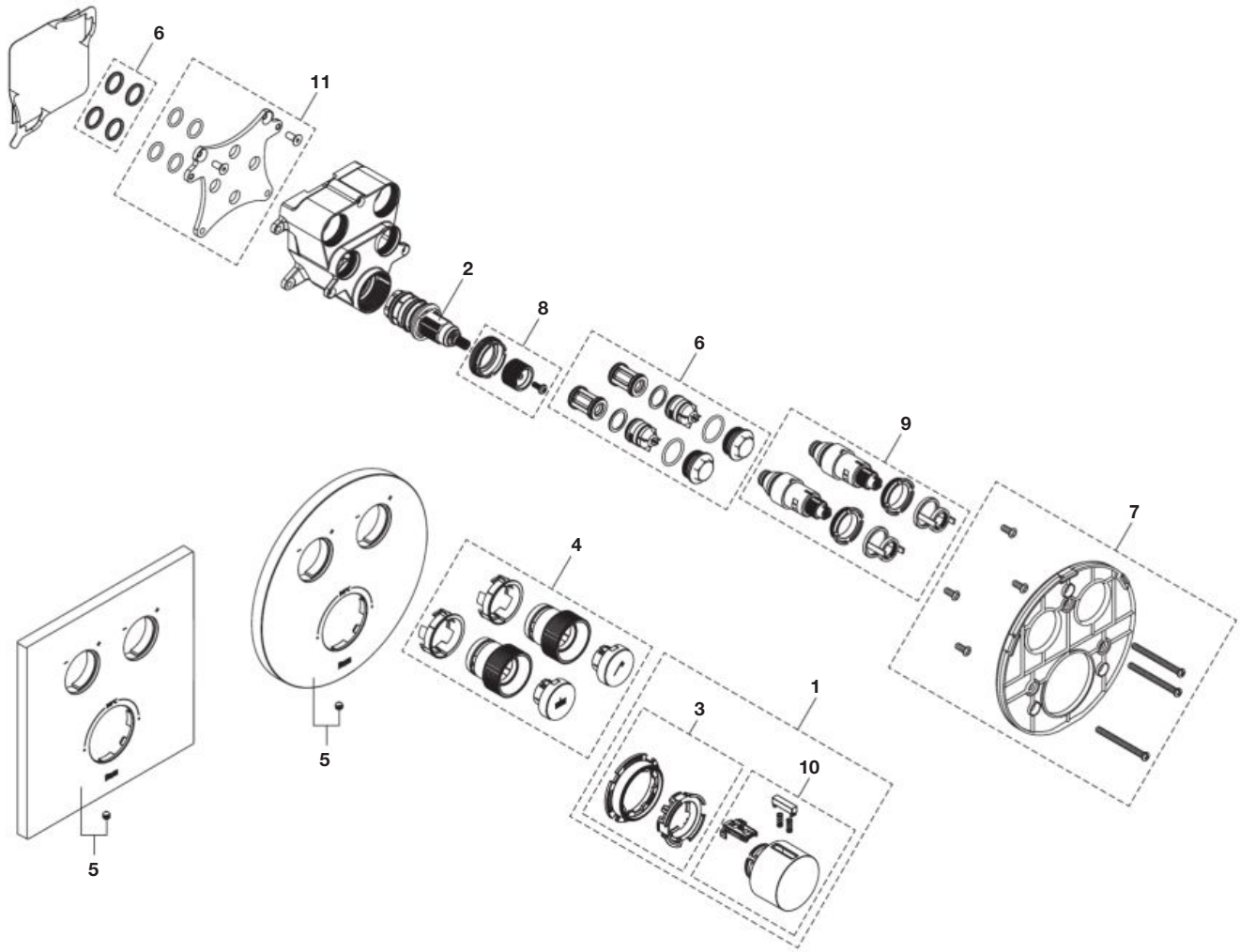

Los ultimos dígitos de la referencia de recambio indican el código del acabado:
Last digits of spare part reference indicate finish code:

00 Cromado / Chromed
B0 Blanco mate / Matt white
NB Negro mate / Matt black
VA Oro cepillado / Brushed brass
SM Acero inoxidable / Stainless Steel

			€
1	**AG02629..R**		15,50
2	**A525015803**		78,50
3	**AG02630..R**		3,27
4	**AG02631..R**		9,14
5	**AG02632..R**	Round	44,60
	AG02639..R	Square	51,20

		€
6	**AG0263300R**	21,80
7	**AG0263400R**	9,56
8	**AG0263500R**	4,11
9	**AG0263600R**	37,60
10	**AG02637..R**	2,29
11	**AG0292300R**	277,00

T-2000

Grifería termostática para baño ducha / Shower bath thermostatic faucet

A5A2A88C00

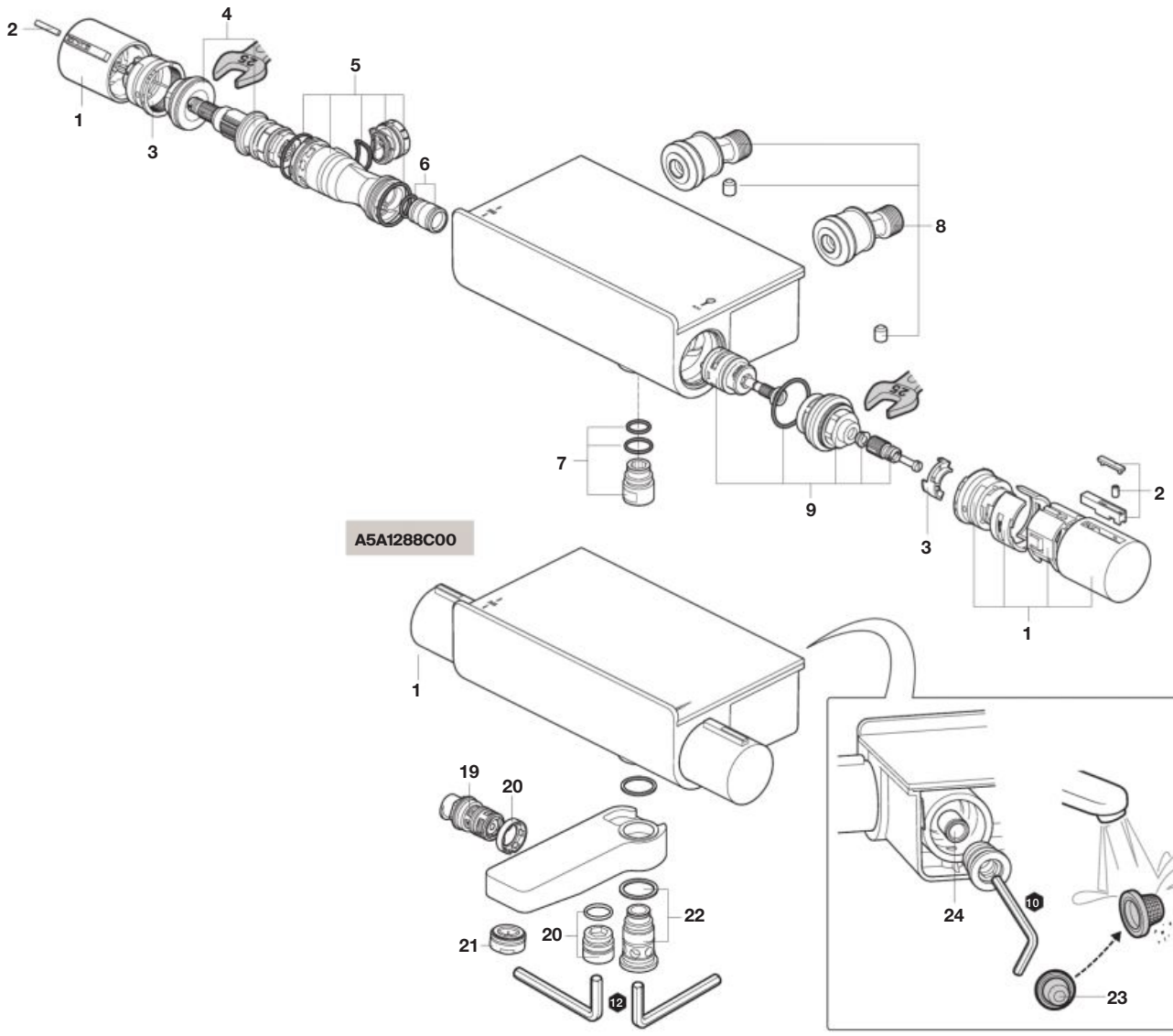

A5A1288C00

			€
1	**AG0132300R**		110,00
2	**AG0091300R**		36,80
3	**AG0160100R**		3,32
	AG0160200R		3,70
4	**A525015803**		78,50
5	**AG0172900R**		6,20

		€
6	**A525017203**	2,74
7	**A525016609**	5,76
8	**AG0118703R**	53,60
9	**AG0151300R**	28,80
19	**A525023600**	35,50
20	**A525024200**	9,74

		€
21	**AG0029400R**	2,74
22	**AG0192500R**	60,60
23	**AG0192600R**	3,65
24	**AG0026307R**	5,83

T-1000 Square

Grifería termostática para baño y ducha / Bath & shower thermostatic faucet

A5A121AC00

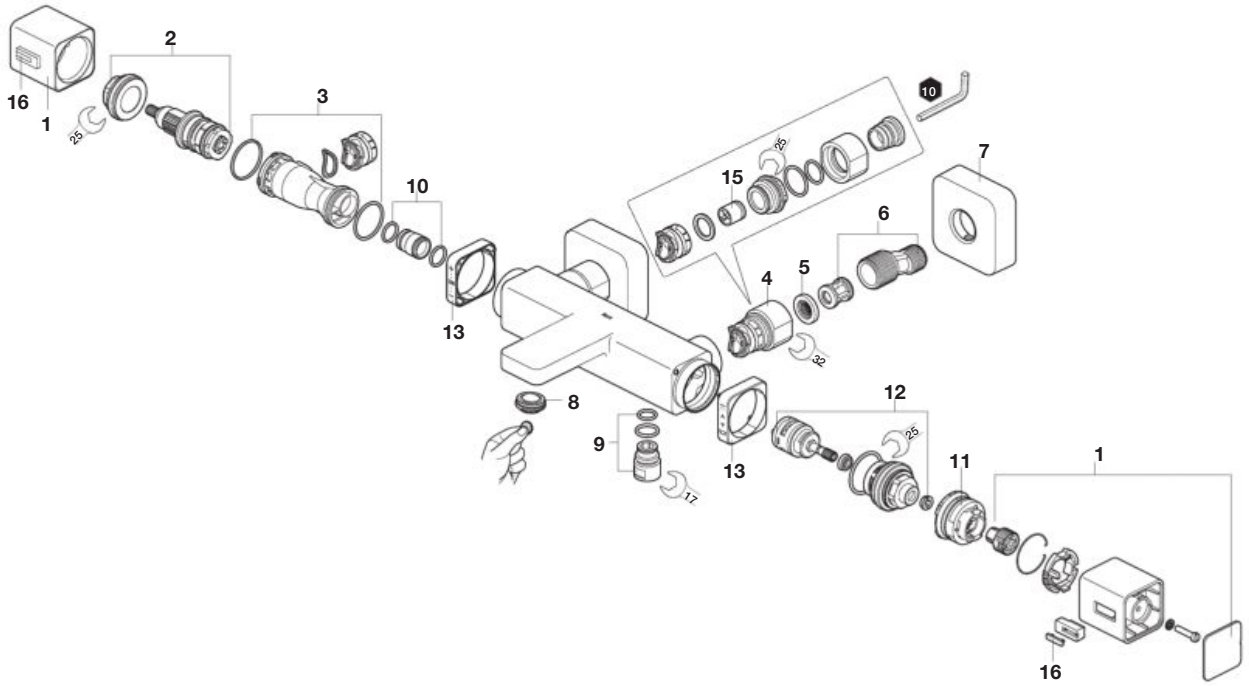

A5A141A

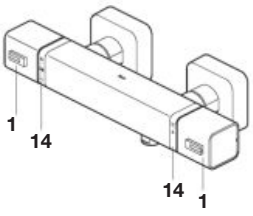

		€
1	**AG0159700R**	81,10
2	**A525015803**	78,50
3	**AG0172900R**	6,20
4	**AG0131300R**	43,80
5	**A525016207**	2,56
6	**AG0156900R**	22,30

			€
7	**AG0118500R**		28,80
8	**AG0160500R**		3,12
9	**A525016609**		5,76
10	**A525017203**		2,74
11	**AG0160100R**		3,32
	A525017203		2,74

		€
12	**AG0151300R**	28,80
13	**AG0160300R**	12,60
14	**AG0160400R**	12,60
15	**AG0026307R**	5,83
16	**AG0159800R**	3,91

T-1000 Round / T-1000 Round Colors

Grifería termostática para baño y ducha / Bath & shower thermostatic faucet

A5A142E..0

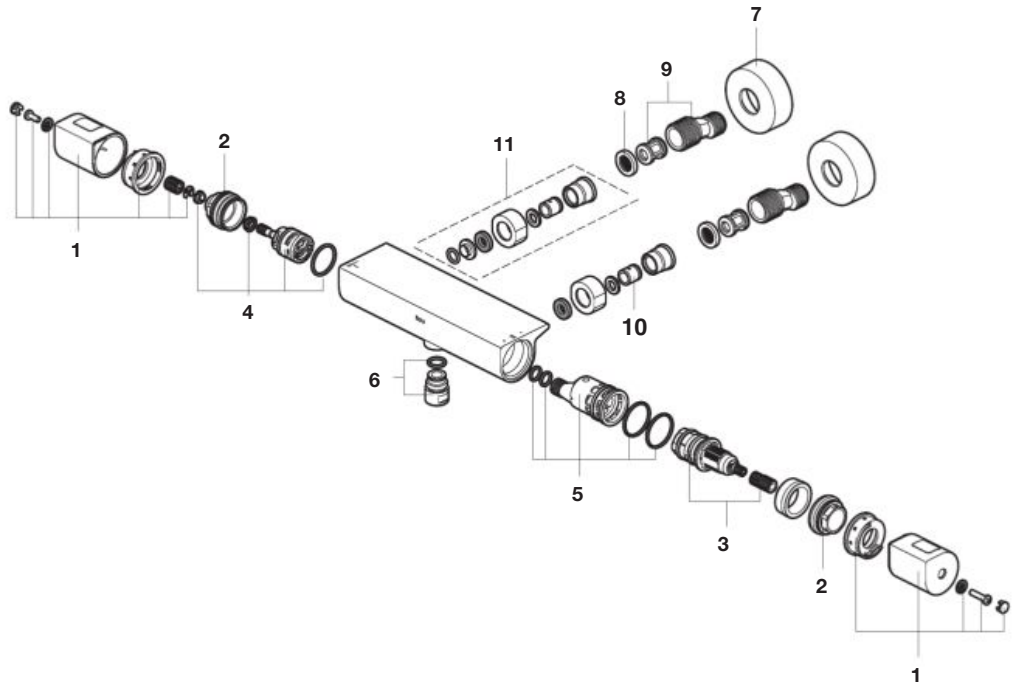

A5A1E2E..0

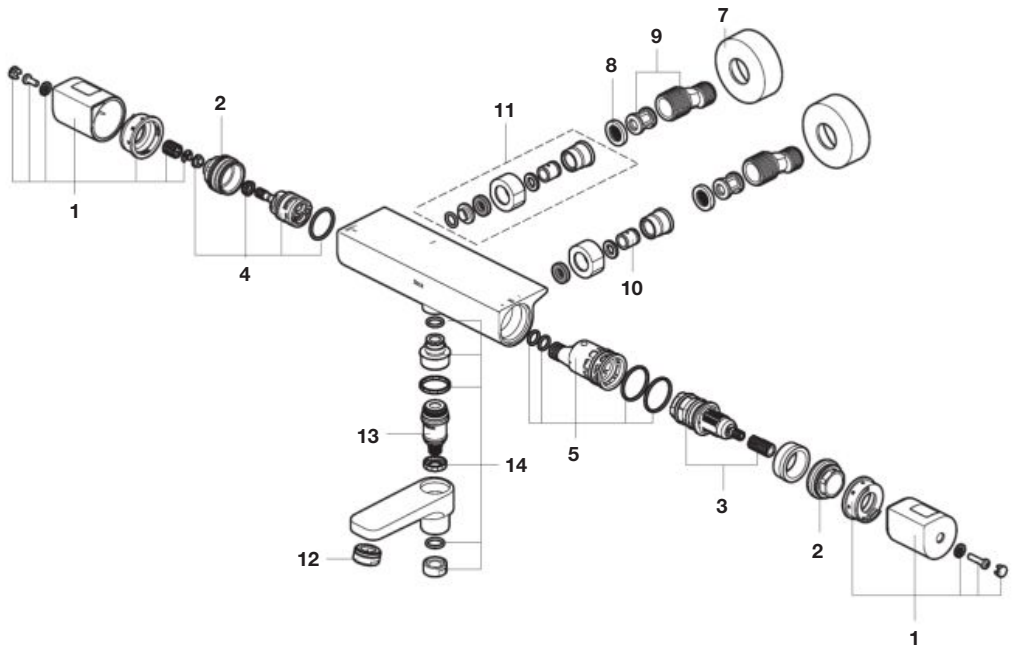

Los ultimos dígitos de la referencia de recambio indican el código del acabado:
Last digits of spare part reference indicate finish code:

Producto	Recambio	
00	00	Cromado / Chromed
CN	CN	Negro titanio / Titanium black
RG	RG	Oro rosado / Rose gold
NM	NM	Negro mate / Matt black

			€
1		**AG0231900R**	67,70
		AG02319CNR	130,00
		AG02319RGR	130,00
		AG02319NMR	177,00
2		**AG0221200R**	16,80
3		**A525015803**	78,50
4		**AG0131903R**	22,60

			€
5		**AG0220900R**	5,02
6		**A525016609**	5,76
7	2 un	**AG0116800R**	9,26
		AG01168CNR	69,10
		AG01168RGR	53,50
		AG01168NMR	68,30
8	2 un	**A525016207**	2,56

			€
9	2 un	**AG0156900R**	22,30
10	2 un	**A525005507**	7,44
11		**AG0221100R**	87,60
		AG02211CNR	38,90
		AG02211RGR	38,90
		AG02211NMR	41,50

			€
12		**AG0029400R**	2,74
		AG00294CNR	8,08
		AG00294RGR	4,74
		AG00294NMR	10,60
13		**AG0232000R**	9,14
14		**AG0232100R**	36,20

T-1000 Round / T-1000 Round Colors

Grifería termostática para baño y ducha / Bath & shower thermostatic faucet

A5A1209
A5A1109

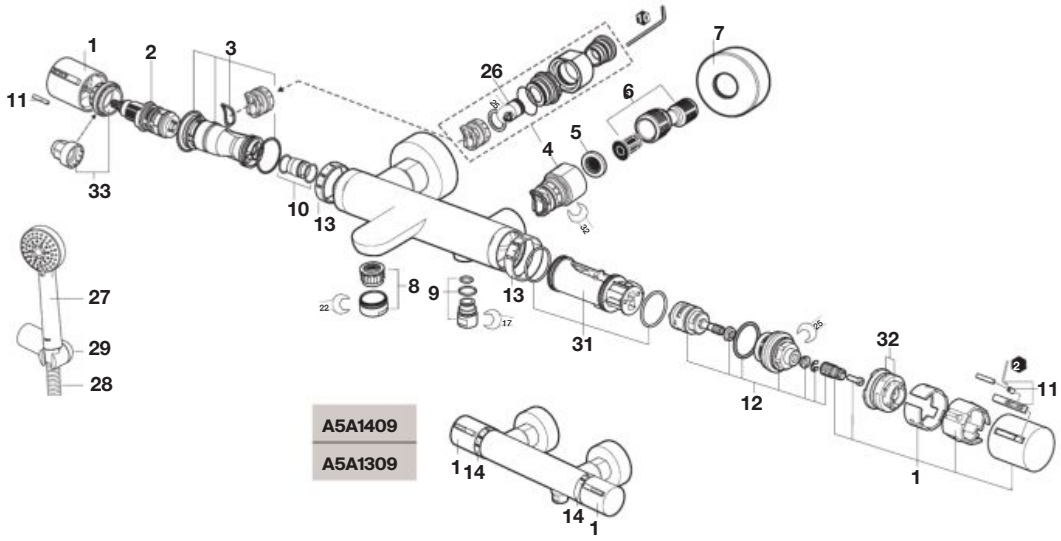

Grifería termostática empotrable para baño y ducha
Wall-mounted bath & shower thermostatic faucet

A5A2809

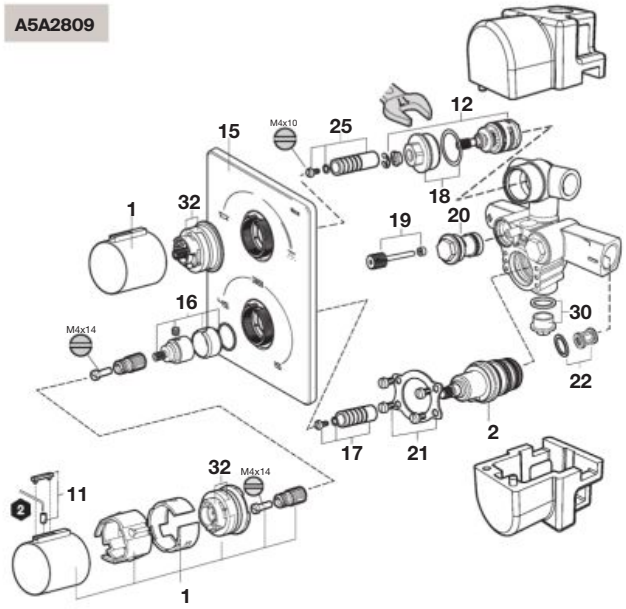

Grifería termostática empotrable para baño o ducha
Wall-mounted bath or shower thermostatic faucet

A5A2909

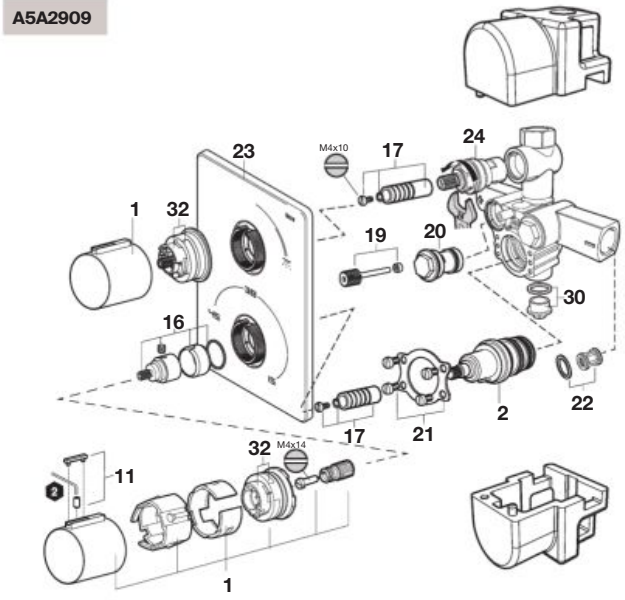

Sustituir los (...) de la referencia por el código del acabado Everlux elegido:
In the product reference replace (..) with the code for the selected finish code:

00 Cromado / Chromed
CN Negro titanio / Titanium black

		€
1	**AG0132300R**	110,00
	AG01323CNR	179,00
2	**A525015803**	78,50
3	**AG0172900R**	6,20
4	**AG0131300R**	43,80
	AG01313CNR	62,00
5	**A525016207**	2,56
6	**AG0156900R**	22,30
7	**AG0116800R**	9,26
	AG01168CNR	69,10

		€
8	**AG0029400R**	2,74
	AG00294CNR	8,08
9	**A525016609**	5,76
10	**A525017203**	2,74
11	**AG0091307R**	36,80
12	**AG0151300R**	28,80
13	**AG0096707R**	19,70
14	**AG0148900R**	13,40
15	**AG0096900R**	28,50
16	**A525017503**	6,95
17	**AG0030403R**	46,10

		€
18	**AG0030603R**	48,60
19	**AG0091403R**	3,18
20	**A525018003**	87,70
21	**AG0030503R**	12,20
22	**A525024803**	38,30
23	**AG0097000R**	29,40
24	**AG0020903R**	51,50
25	**AG0152703R**	20,30
26	**AG0026307R**	5,83
27	**A5B1103C00**	-
28	**A525009800**	27,10

			€
29	**AG0003700R**		13,70
30	**AG0094803R**		15,60
31	**A525016707**		14,90
32	**AG0133107R**		5,44
	AG0160100R		3,32
33	**AG0215900R**		-

T-1000 Round / T-1000 Round Colors

Grifería termostática empotrable para baño y ducha / Wall-mounted bath & shower thermostatic faucet

A5A0D09..0
A5A2E09..0

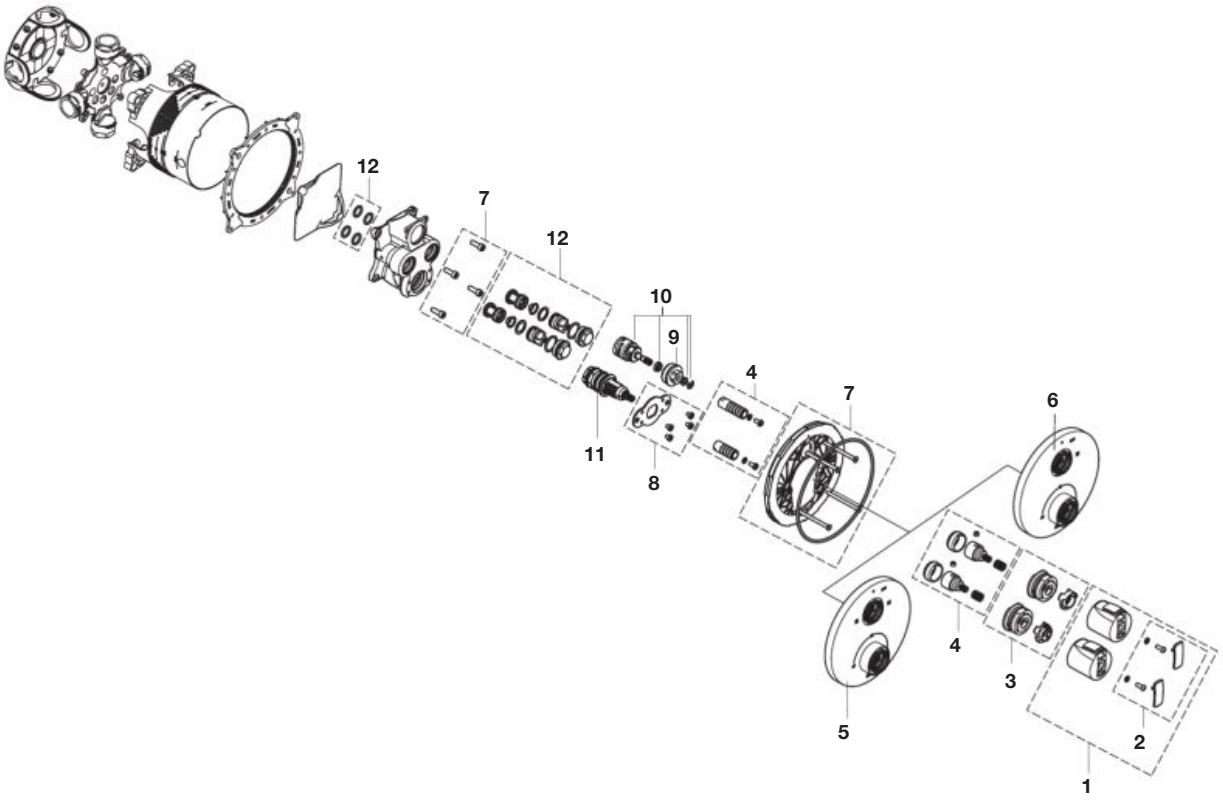

Los ultimos dígitos de la referencia de recambio indican el código del acabado:
Last digits of spare part reference indicate finish code:

Producto	Recambio	
00	00	Cromado / Chromed
CN	CN	Negro titanio / Titanium black
RG	RG	Oro rosado / Rose gold
NM	NM	Negro titanio cepillado / Brushed titanium black

			€
1	**AG0148800R**		19,60
	AG01488CNR		85,00
	AG01488RGR		85,00
	AG01488NMR		444,00
2	**AG0149000R**		3,12
	AG01490CNR		15,60
	AG01490RGR		15,60
	AG01490NMR		35,50
3	**AG0132407R**	+	5,44
	AG0133107R		5,44

			€
4	**AG0132803R**		43,80
5	**AG0132200R**	+	22,60
	AG01322CNR	+	28,00
	AG01322RGR	+	26,40
	AG01322NMR	+	78,00
6	**AG0132900R**		21,70
	AG01329CNR		28,00
	AG01329RGR		26,40
	AG01329NMR		78,00
7	**AG0120900R**		23,50

			€
8		**AG0132003R**	20,80
9		**AG0030603R**	48,60
10		**AG0131903R**	22,60
11		**A525015803**	78,50
12	2 un	**AG0132107R**	41,70

T-500

Grifería termostática para baño y ducha / Bath & shower thermostatic faucet

A5A1E18

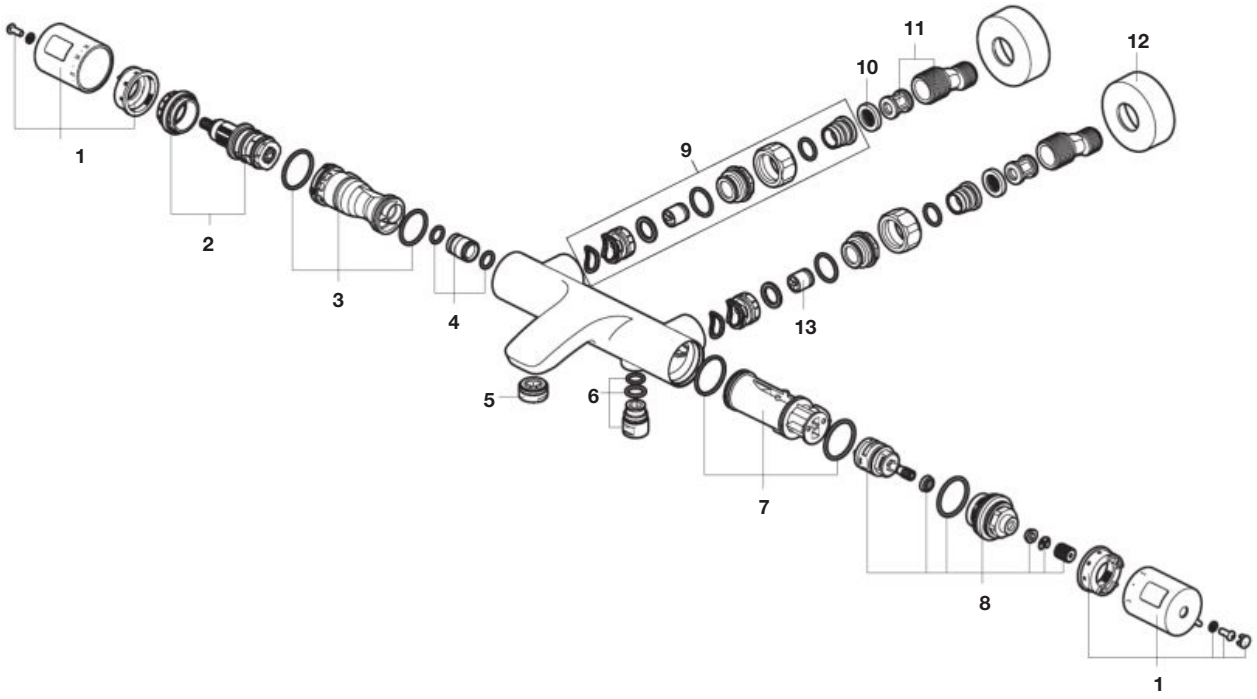

Los ultimos dígitos de la referencia de recambio indican el código del acabado:
Last digits of spare part reference indicate finish code:

00 Cromado / Chromed
VA Oro cepillado / Brushed brass
SM Acero inoxidable / Stainless Steel
NB Negro mate / Matt black
B0 Blanco mate / Matt white

			€
1		**AG0221400R**	24,60
		AG02214VAR	65,80
		AG02214SMR	65,60
		AG02214NBR	20,80
		AG02214B0R	23,90
2		**A525015803**	78,50
3		**AG0172900R**	6,20
4		**A525017203**	2,74

			€
5		**AG0029400R**	2,74
		AG00294VAR	7,86
		AG00294SMR	8,12
		AG00294NBR	11,50
		AG00294B0R	11,40
6		**A525016609**	5,76
	Negro mate	**AG02385CNR**	21,80

			€
7		**A525016707**	14,90
8		**AG0151300R**	28,80
9	2 un	**AG0131300R**	43,80
		AG01313VAR	36,70
		AG01313SMR	36,50
		AG01313NBR	39,70
		AG01313B0R	40,80
10	2 un	**A525016207**	2,56

			€
11	2 un	**AG0156900R**	22,30
12	2 un	**AG0116800R**	9,26
		AG01168NBR	9,26
13	2 un	**AG0026307R**	5,83

T-500

Grifería termostática para baño y ducha / Bath & shower thermostatic faucet

A5A2E18

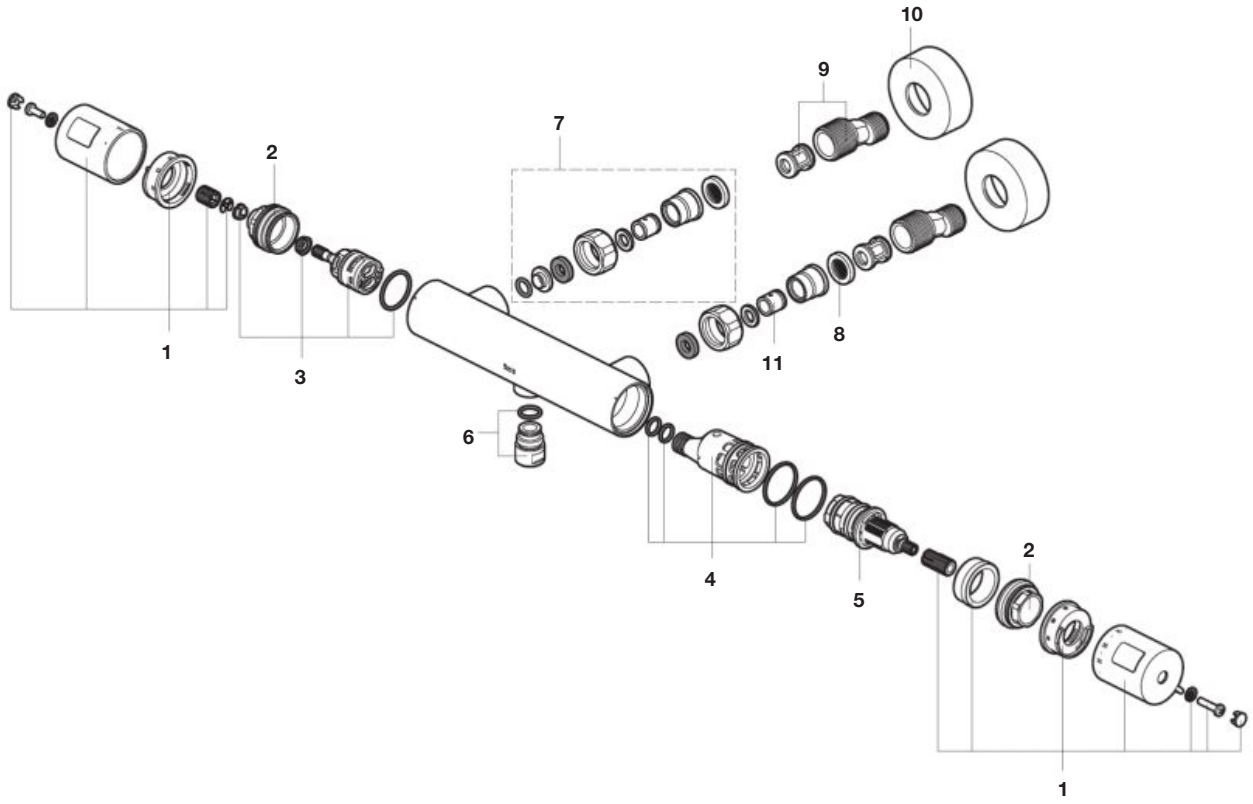

Los ultimos dígitos de la referencia de recambio indican el código del acabado:
Last digits of spare part reference indicate finish code:

00 Cromado / Chromed
VA Oro cepillado / Brushed brass
SM Acero inoxidable / Stainless Steel
NB Negro mate / Matt black
B0 Blanco mate / Matt white

			€
1		**AG0221500R**	50,20
		AG02215VAR	-
		AG02215SMR	-
		AG02215NBR	21,50
		AG02215B0R	-
2		**AG0221200R**	16,80
3		**AG0131903R**	22,60
4		**AG0220900R**	5,02
5		**A525015803**	78,50

			€
6	Negro mate	**A525016609**	5,76
		AG02385CNR	21,80
7	2 un	**AG0221100R**	87,60
		AG02211VAR	-
		AG02211SMR	-
		AG02211NBR	27,40
		AG02211B0R	-
8	2 un	**A525016207**	2,56

			€
9	2 un	**AG0156900R**	22,30
10	2 un	**AG0116800R**	9,26
		AG01168VAR	45,50
		AG01168SMR	43,30
		AG01168NBR	38,20
		AG01168B0R	11,20
11	2 un	**A525005507**	7,44

T-500

Grifería termostática para baño y ducha / Bath & shower thermostatic faucet

A5A2K18

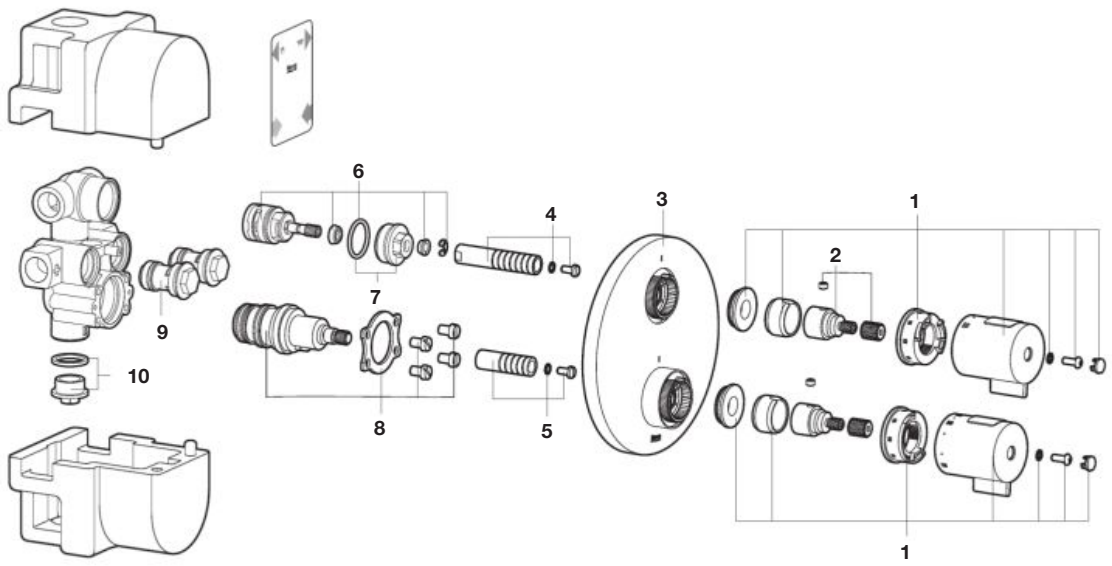

Grifería termostática para ducha / Shower thermostatic faucet

A5A2M18

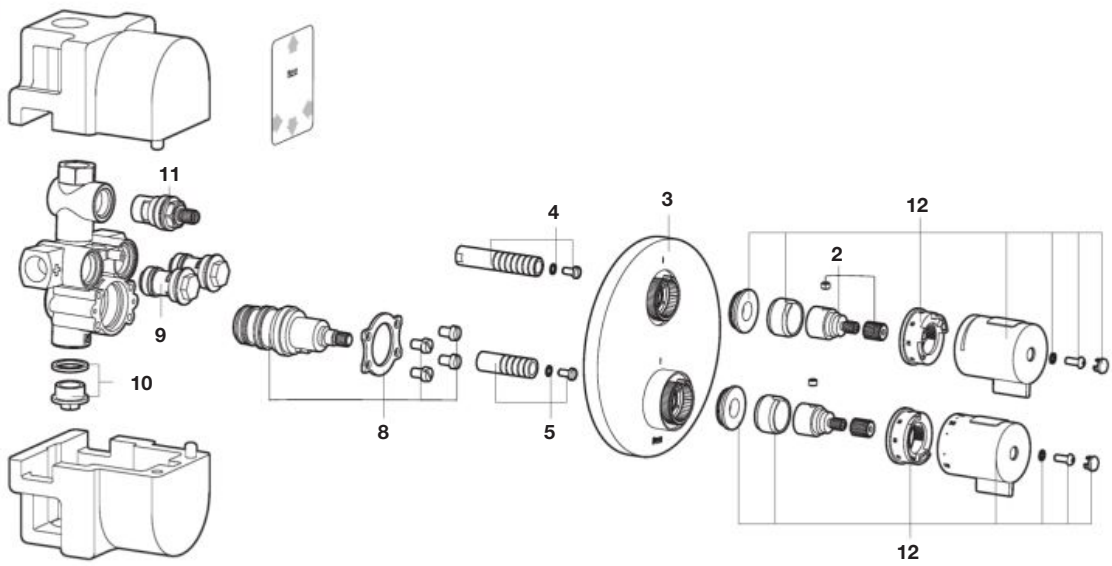

Los ultimos dígitos de la referencia de recambio indican el código del acabado:
Last digits of spare part reference indicate finish code:
00 Cromado / Chromed
NB Negro mate / Matt black

		€
1	**AG0227000R**	23,80
	AG02270NBR	21,10
2	**A525017503**	6,95

		€
3	**AG0139700R**	26,40
	AG01397NBR	19,20
4	**AG0140700R**	7,59

		€
5	**AG0152703R**	20,30
6	**AG0131903R**	22,60
7	**AG0030603R**	48,60

		€
8	**A525017303**	125,00
9	**A525018003**	87,70
10	**AG0094803R**	15,60

		€
11	**AG0020903R**	51,50
12	**AG0227100R**	23,00

T-500

Grifería termostática para baño y ducha / Bath & shower thermostatic faucet

A5A0C18	Round
A5A2P18	Round
A5A0D18	Square
A5A2R18	Square

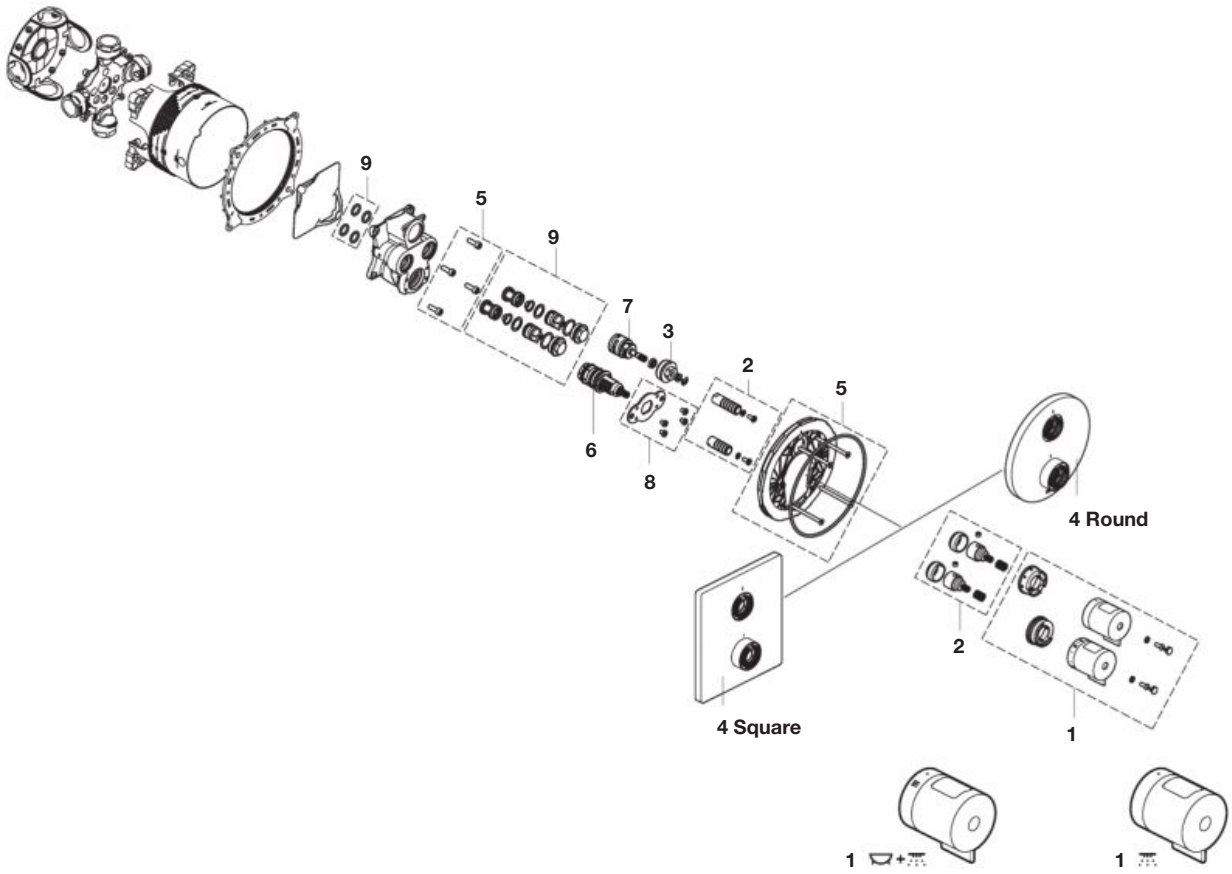

Los ultimos dígitos de la referencia de recambio indican el código del acabado:
Last digits of spare part reference indicate finish code:

00 Cromado / Chromed
VA Oro cepillado / Brushed brass
SM Acero inoxidable / Stainless Steel
NB Negro mate / Matt black
B0 Blanco mate / Matt white

			€
1	**AG02270..R**		23,80
	AG02699..R		9,92
2	**AG0132803R**		43,80
3	**AG0030603R**		48,60
4	**AG01397..R**	Round	26,40
	AG02698..R	Square	18,60

		€
5	**AG0120900R**	23,50
6	**A525015803**	78,50
7	**AG0131903R**	22,60
8	**AG0132003R**	20,80
9	**AG0132107R**	41,70

Victoria (T-500)

Grifería termostática para baño y ducha / Bath & shower thermostatic faucet

A5A1118C00

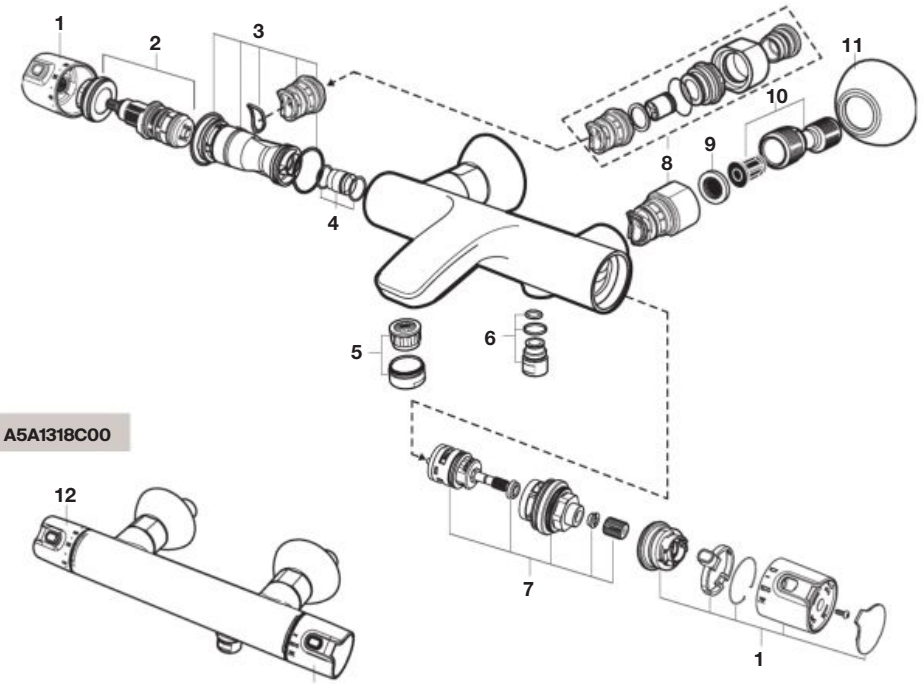

A5A1318C00

Grifería termostática empotrable para baño y ducha / Wall-mounted bath & shower thermostatic faucet

A5A2A18C00

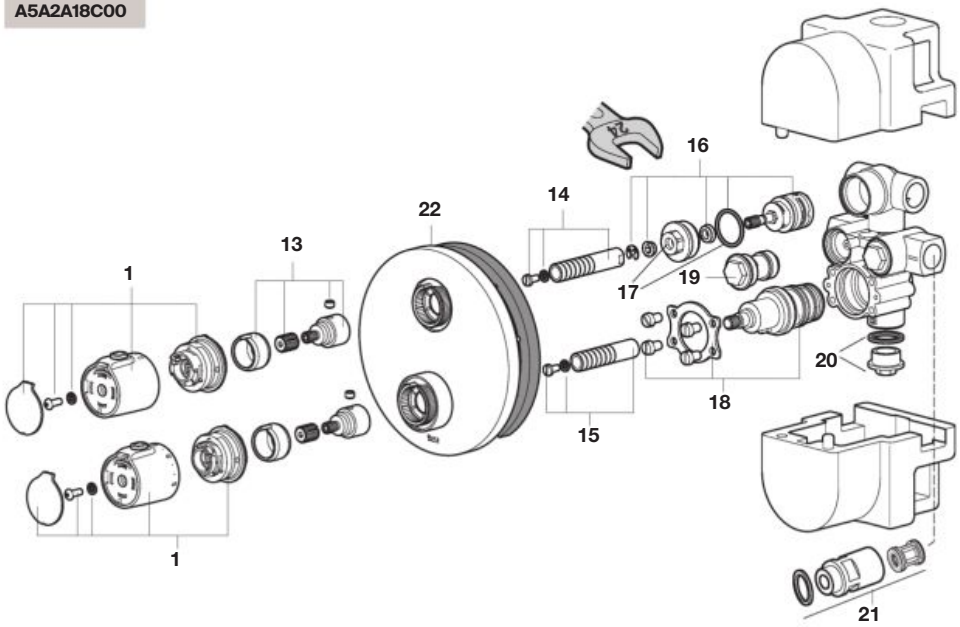

A5A2B18C00

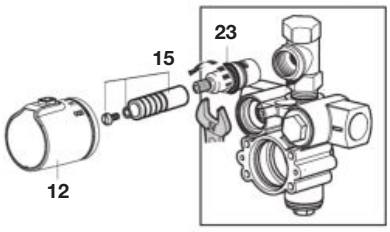

		€
1	**AG0131200R**	25,80
2	**A525015803**	78,50
3	**AG0172900R**	6,20
4	**A525017203**	2,74
5	**AG0029400R**	2,74

		€
6	**A525016609**	5,76
7	**AG0151300R**	28,80
8	**AG0131300R**	43,80
9	**A525016207**	2,56
10	**AG0103908R**	17,30

		€
11	**AG0085400R**	8,41
12	**AG0131400R**	25,50
13	**A525017503**	6,95
14	**AG0152703R**	20,30
15	**AG0140700R**	7,59

		€
16	**AG0131903R**	22,60
17	**AG0030603R**	48,60
18	**A525017303**	125,00
19	**A525018003**	87,70
20	**AG0094803R**	15,60

		€
21	**A525024803**	38,30
22	**AG0139700R**	26,40
23	**AG0020903R**	51,50
24	**A525016707**	14,90

Victoria (T-500)

Grifería termostática empotrable para baño y ducha / Wall-mounted bath & shower thermostatic faucet

A5A2818

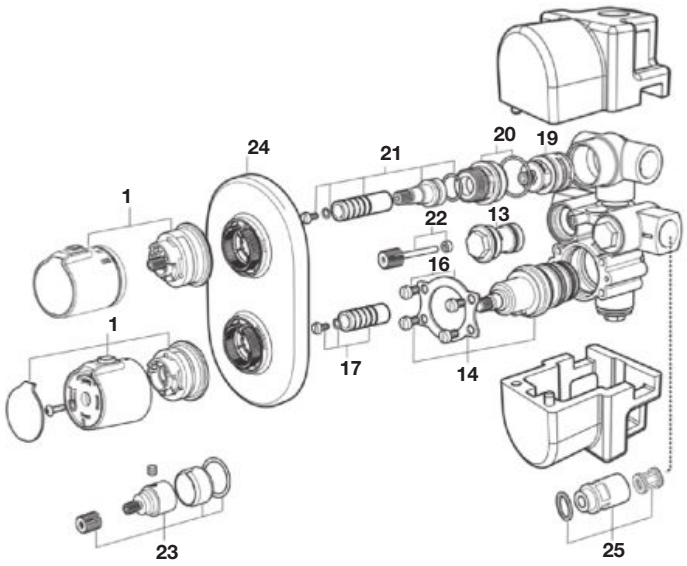

Grifería termostática empotrable para baño o ducha / Wall-mounted bath or shower thermostatic faucet

A5A2918

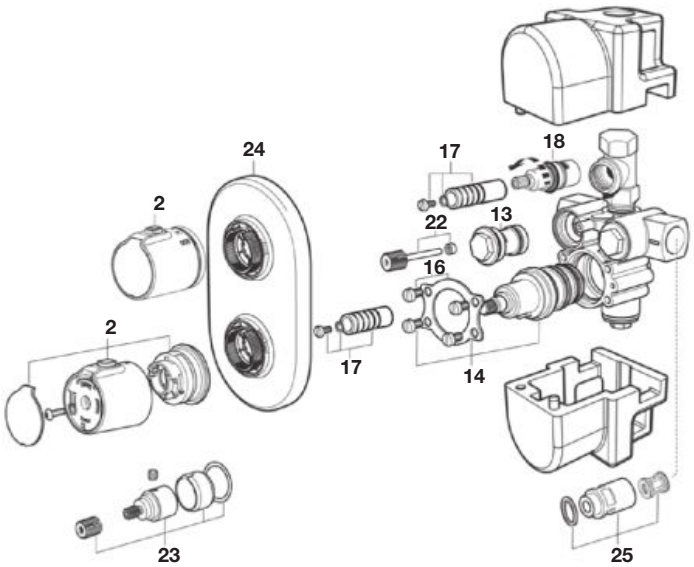

		€
1	**AG0038000R**	89,20
2	**AG0038200R**	110,00
13	**A525018003**	87,70
14	**A525017303**	125,00
16	**AG0021103R**	18,30
17	**AG0030403R**	46,10

		€
18	**AG0020903R**	51,50
19	**AG0038407R**	36,40
20	**AG0038503R**	15,30
21	**AG0021003R**	36,40
22	**A525017803**	2,61
23	**A525017503**	6,95

		€
24	**AG0038600R**	183,00
25	**A525024803**	38,30

Puzzle-T

Grifería termostática empotrable para ducha / Wall-mounted shower thermostatic faucet

A5A2805

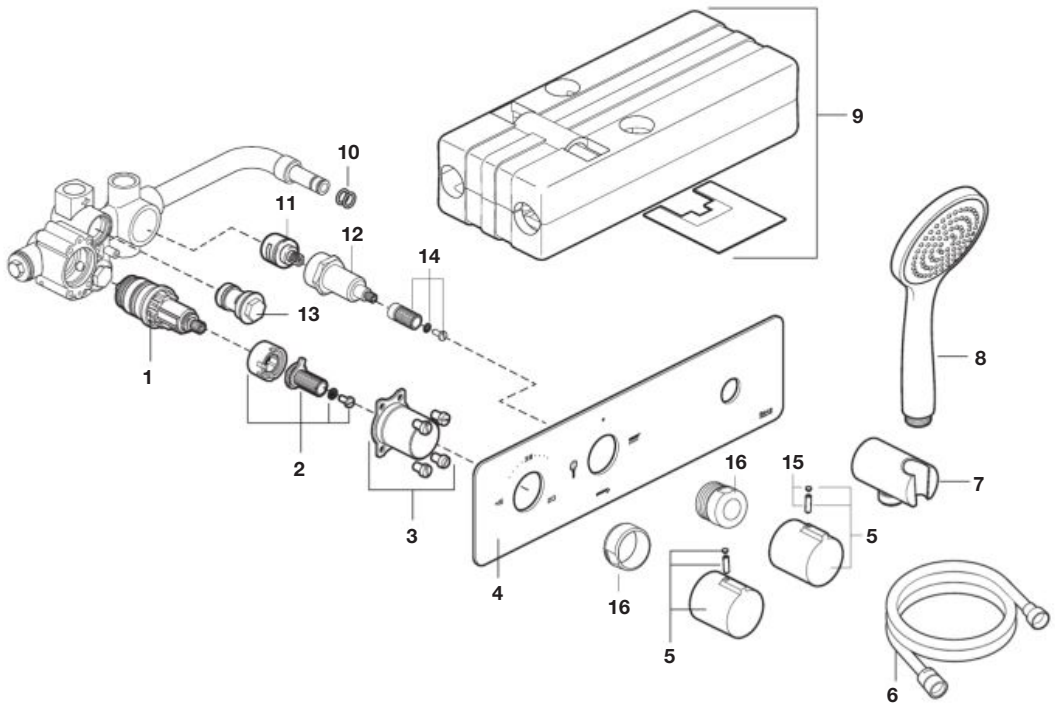

		€
1	**A525028003**	81,70
2	**AG0012303R**	5,18
3	**AG0039603R**	65,80
4	**AG0039300R**	429,00

		€
5	**AG0039500R**	38,50
6	**A525009800**	27,10
7	**AG0039400R**	95,70
8	**AG0045000R**	57,40

		€
9	**AG0040107R**	34,70
10	**AG0040207R**	2,52
11	**AG0039900R**	52,70
12	**AG0041103R**	46,50

		€
13	**A525018003**	87,70
14	**AG0102403R**	12,30
15	**AG0095000R**	3,65
16	**AG0102507R**	152,00

Puzzle-T

Grifería termostática empotrada / Wall-mounted thermostatic faucet

A5A2778C00

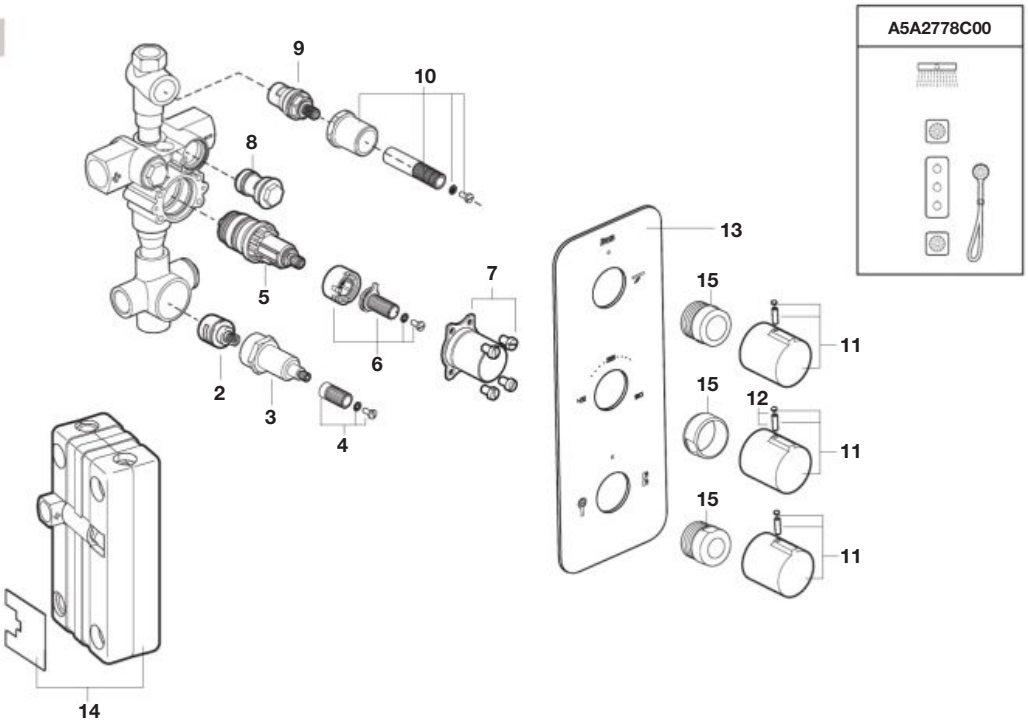

Grifería termostática empotrada / Wall-mounted thermostatic faucet

A5A2878C00
A5A2978C00

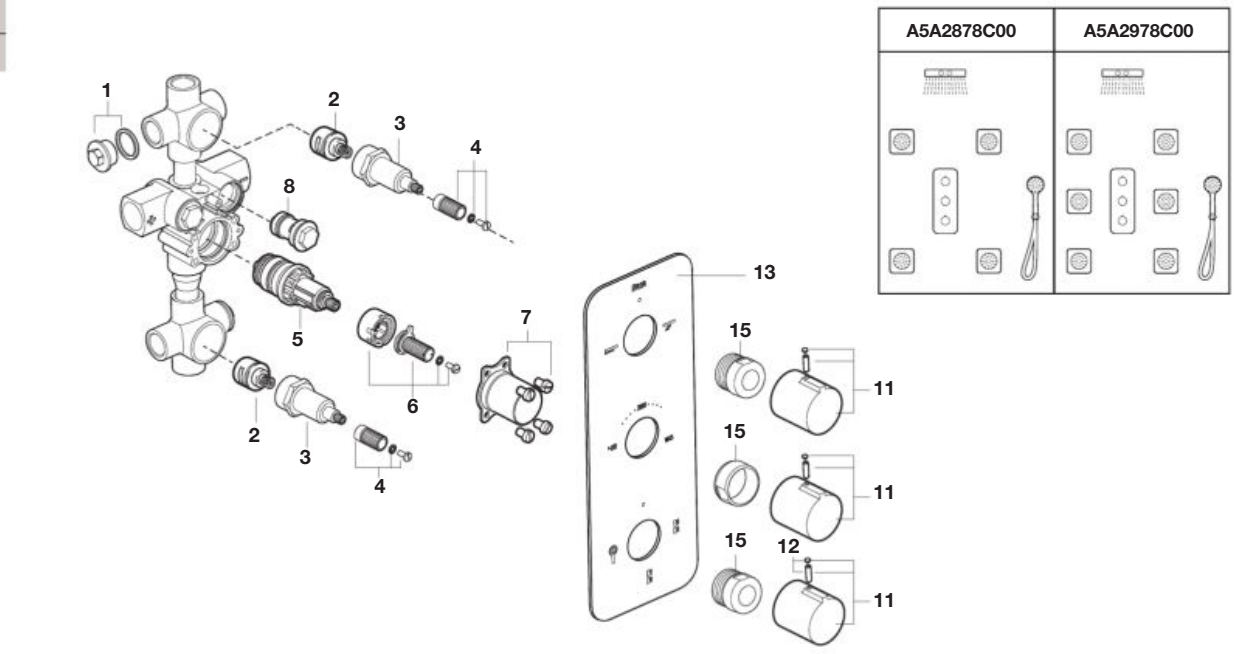

		€
1	AG0094803R	15,60
2	AG0039900R	52,70
3	AG0041103R	46,50
4	AG0102403R	12,80
5	A525028003	81,70
6	AG0012303R	5,18

		€
7	AG0039603R	66,80
8	A525018003	87,70
9	AG0020903R	51,50
10	AG0094903R	94,70
11	AG0039500R	38,50
12	AG0095000R	3,65

		€
13	AG0095100R (A5A2778C00)	214,00
	AG0095200R (A5A2878C00)	183,00
	AG0095300R (A5A2978C00)	185,00
14	AG0095402R	32,40
15	AG0102507R	152,00

Puzzle

Ducha de mano con toma de agua / Waterinlet handshower

A5B1378C00

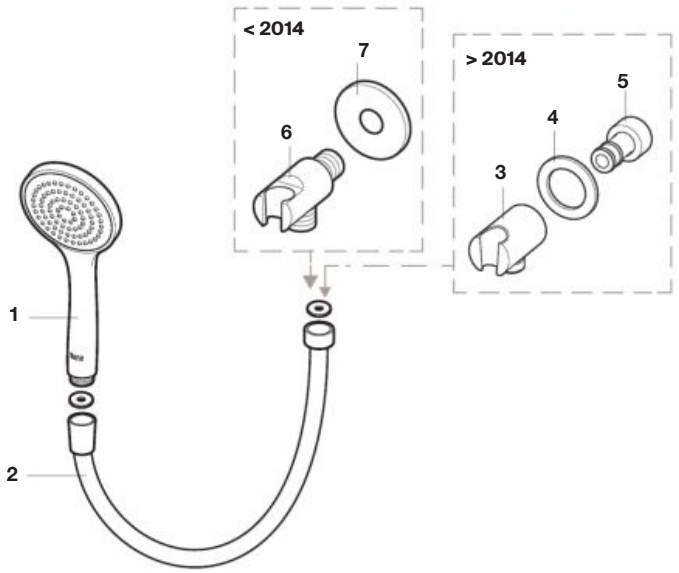

		€
1	**AG0045000R**	57,40
2	**A525009800**	27,10
3	**AG0039400R**	95,70
4	**AG0095600R**	34,20

		€
5	**AG0095503R**	36,10
6	**A5B5250C00**	-
7		
7	**AG0112700R**	-

Rociador de pared / Shower head for wall

A5A9978C00

A5A9878C00

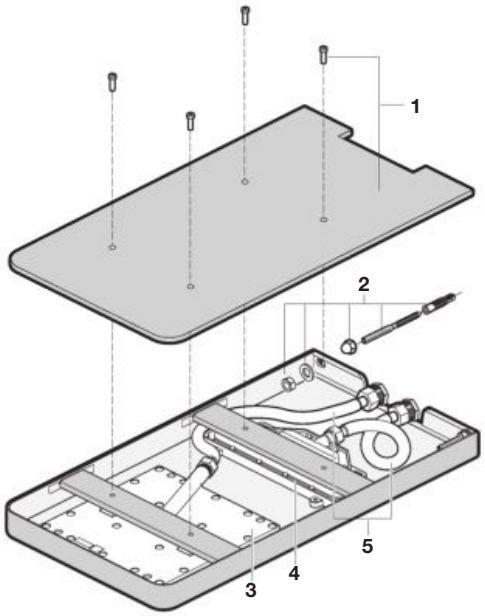

		€
1	**AG0095700R**	39,70
2	**AG0095803R**	14,70
3	**AD0003400R**	71,20

		€
4	**AG0095900R**	120,00
5	**AG0096009R**	9,55

RocaBox Universal

RocaBox Universal

A525869403

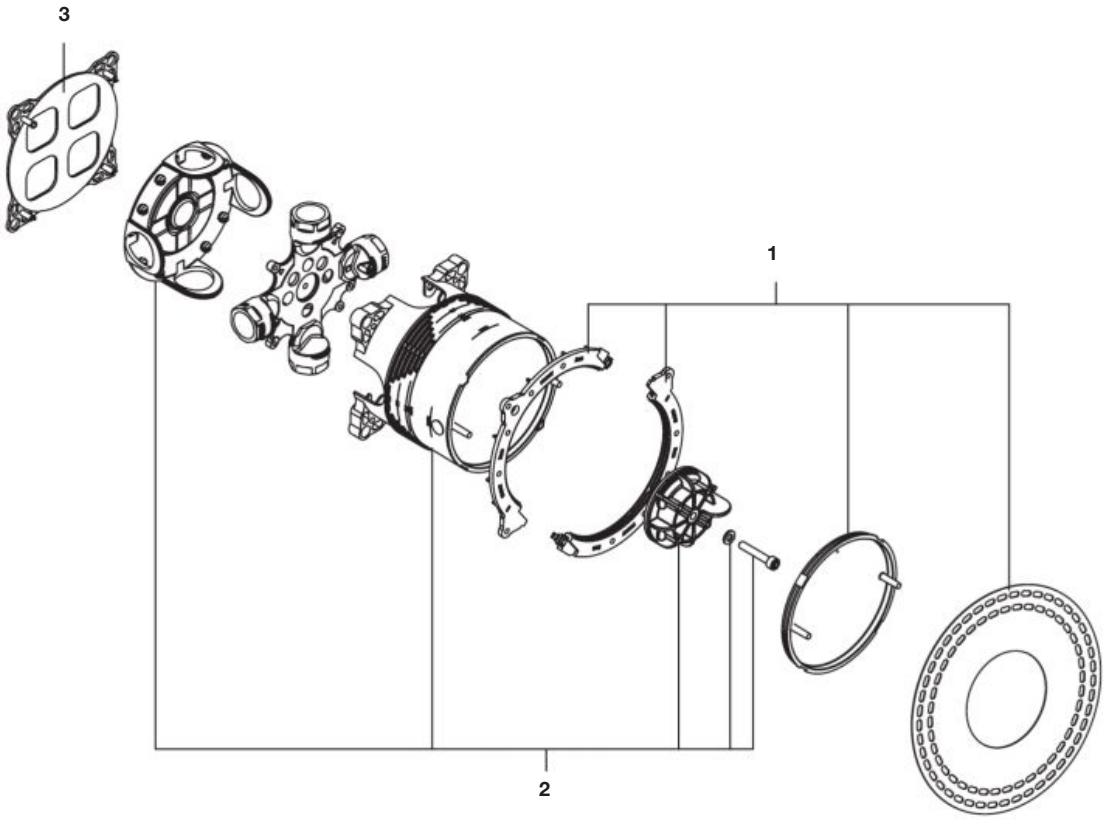

		€
1	**AG0120000R**	18,00
2	**AG0119900R**	24,10
3	**AG0198400R**	3,02

Admite:
Admits:

		€
A525564303	Kit prolongación interna (20 mm) KIT INTERNAL EXTENSION (20 mm)	-
A525564600	Kit florón Round de alargo (20 mm) kit EXTERNAL EXTENSION ROUND (20 mm)	-
A525564700	Kit florón Square de alargo (20 mm) KIT EXTERNAL EXTENSION SQUARE (20 mm)	-

RocaBox Monomando
RocaBox Single-lever

Griferías baño y ducha monomando / Single-lever bath & shower faucet

A5A0B01	L90	
A5A0B50	THESIS	
A5A0B31	ESMAI	
A5A0B11	LANTA	
A5A0B68	M2	
A5A0B27	LOGICA	
A5A0B90	ATLAS	
A5A0B96	NAIA	
A5A0B3A	INSIGNIA	

A5A2B01	L90	
A5A2B50	THESIS	
A5A2B31	ESMAI	
A5A2B11	LANTA	
A5A2B68	M2	
A5A2B27	LOGICA	
A5A2B90	ATLAS	
A5A2B96	NAIA	
A5A2B3A	INSIGNIA	

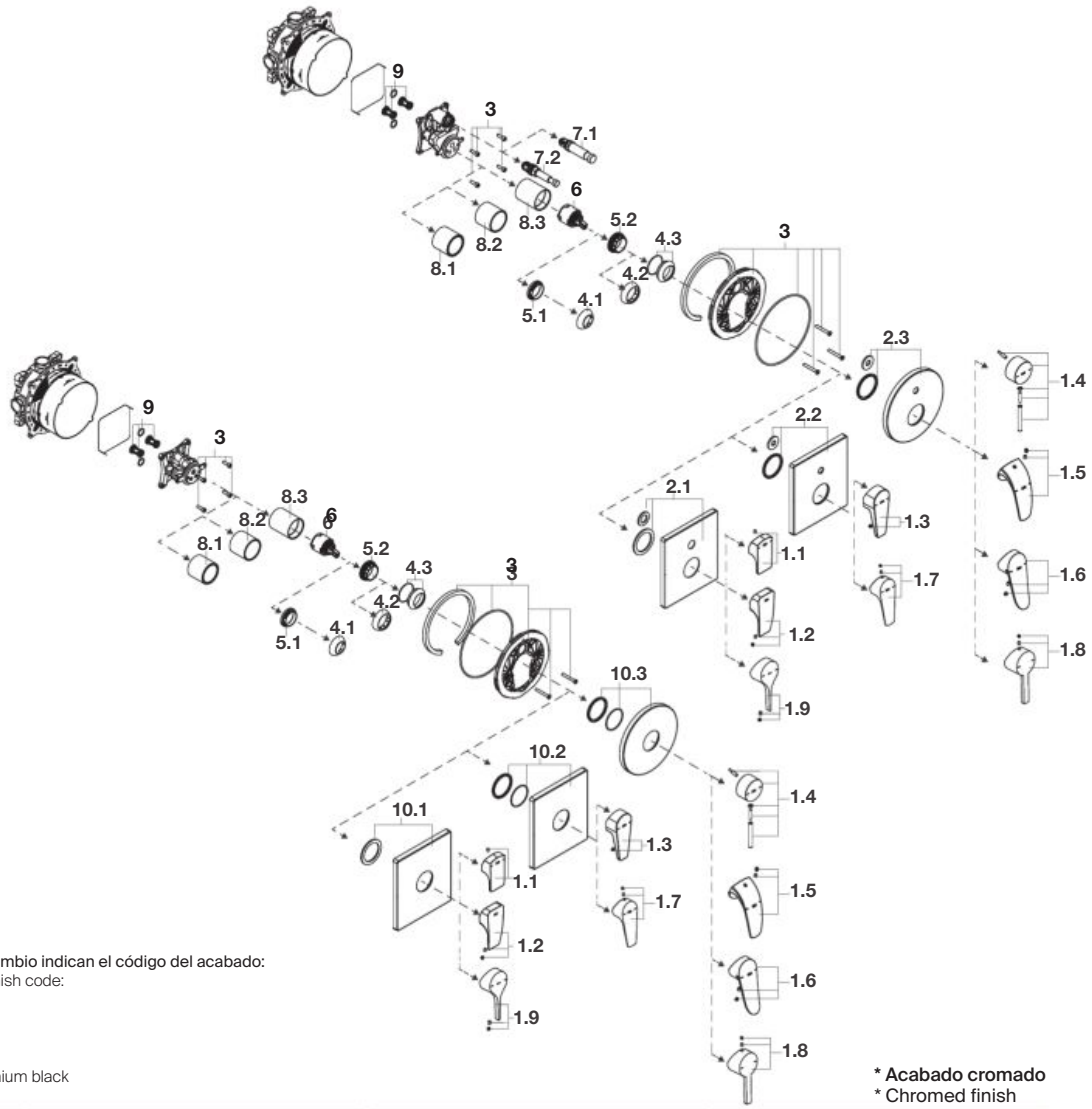

Los ultimos dígitos de la referencia de recambio indican el código del acabado:
Last digits of spare part reference indicate finish code:

00 Cromado / Chromed
CN Negro titanio / Titanium black
RG Oro rosado / Rose gold
NM Negro titanio cepillado / Brushed titanium black

*** Acabado cromado**
*** Chromed finish**

			€
1.1	**AG0041800R**	L90	42,00
1.2	**A525022600**	THESIS	32,90
1.3	**A525029600**	ESMAI	22,60
1.4	**AG0121400R**	LANTA	61,80
1.5	**AG0036900R**	M2	73,80
1.6	**AG0018100R**	LOGICA	23,00
1.7	**AG0116300R**	ATLAS	26,70
1.8	**AG0137000R**	NAIA	11,30
	AG01370CNR		49,20
	AG01370RGR		51,70
	AG01370NMR		57,90
1.9	**AG0154200R**	INSIGNIA	13,20
	AG01542CNR		48,00
	AG01542RGR		39,10
	AG01542NMR		45,00
2.1	**AG0121900R**	L90 / THESIS / INSIGNIA	90,60
2.2	**AG0121100R**	ESMAI / ATLAS	61,80

			€
2.3	**AG0121300R**	LANTA	21,10
	AG01213CNR	M2	26,50
	AG01213RGR	LOGICA	25,80
	AG01213NMR	NAIA	32,90
3	**AG0120900R**		23,50
4.1	**AG0032100R**	L90 / M2	27,90
4.2	**AG0085300R**	THESIS / ESMAI / LOGICA / ATLAS / NAIA / INSIGNIA	18,00
	AG00853CNR		10,10
	AG00853RGR		7,64
	AG00853NMR		13,70
4.3	**AG0121500R**	LANTA	23,50
5.1	**A525027803**	L90 / M2	32,40
5.2	**A525023507**	THESIS / ESMAI / LANTA / LOGICA / ATLAS / NAIA / INSIGNIA	4,23
6	**AG0110607R**		9,98

			€
7.1	**A525022800**	L90 / THESIS	85,90
	A525022800*	INSIGNIA	85,90
	AG02188CNR		26,40
	AG02188RGR		94,70
	AG02188NMR		101,00
7.2	**A525006500***	ESMAI / LANTA / M2 / LOGICA / ATLAS	23,30
	AG02186CNR		73,00
	AG02186RGR		63,90
	AG02186NMR		73,60
	AG02186CNR	NAIA	73,00
8.1	**AG0121600R**	L90 / M2	88,00
8.2	**A525006800**	THESIS / ESMAI / LOGICA / ATLAS	20,50
	A525006800*	NAIA / INSIGNIA	20,50
	AG02189CNR		32,10
	AG02189RGR		31,20
	AG02189NMR		35,00
8.3	**AG0121700R**	LANTA	119,00

			€
9	**AG0121000R**		21,70
10.1	**AG0127100R**	L90	89,20
	AG01271CNR	THESIS	87,30
	AG01271RGR	INSIGNIA	81,20
	AG01271NMR		88,50
10.2	**AG0127000R**	ESMAI / ATLAS	23,00
10.3	**AG0121200R**	LANTA / M2 / LOGICA / NAIA	19,90
	AG01212CNR		25,50
	AG01212RGR		24,20
	AG01212NMR		31,80

RocaBox Termostático
RocaBox Thermostatic

Griferías baño y ducha termostáticas / Thermostatic bath & shower faucets

T-1000	**A5A0C09C00**	
	A5A2C09C00	
T-2000	**A5A0C88C00**	
	A5A2C88C00	
L90-T	**A5A0C01C00**	
	A5A2C01C00	
T-1000 SQUARE	**A5A0C1AC00**	
	A5A2C1AC00	

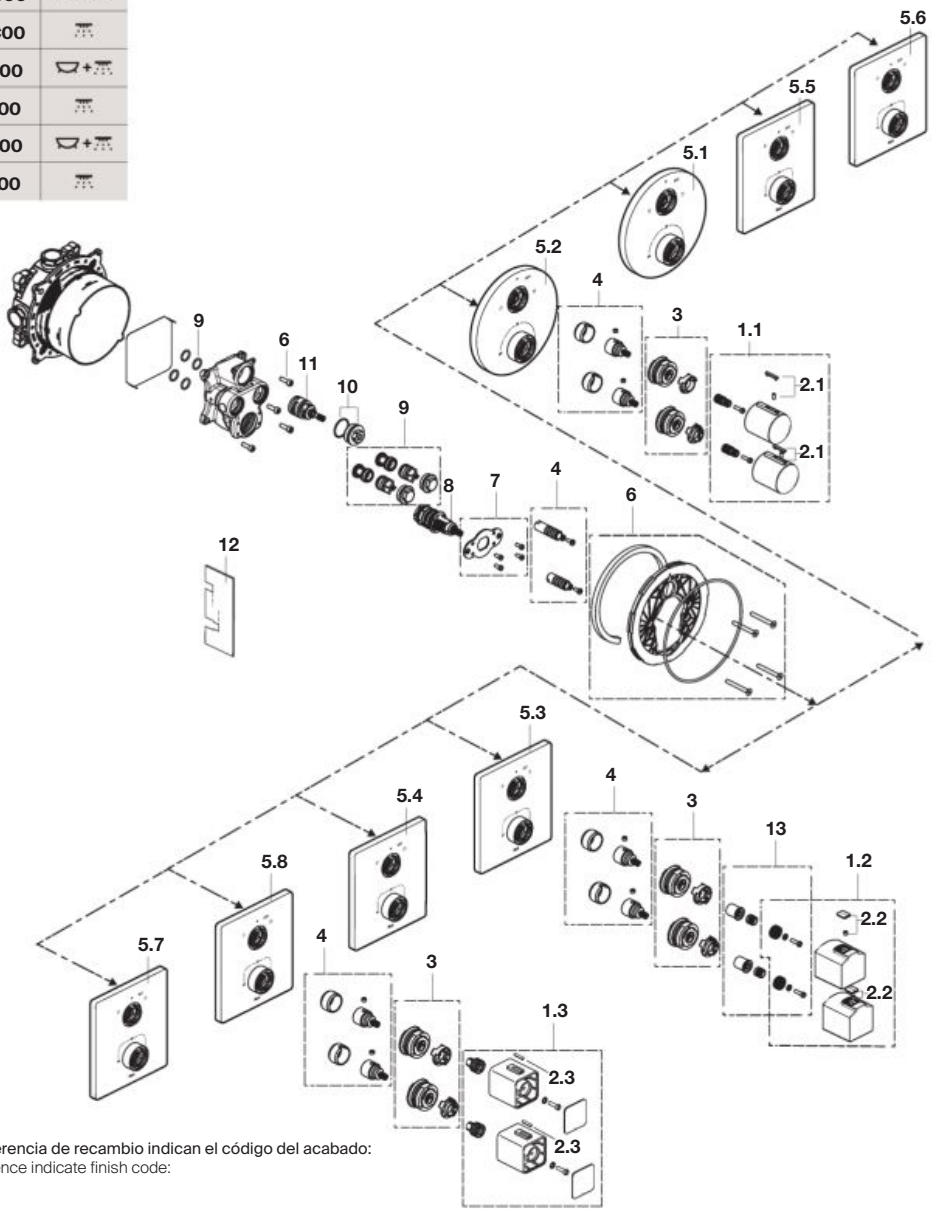

Los ultimos dígitos de la referencia de recambio indican el código del acabado:
Last digits of spare part reference indicate finish code:

00 Cromado / Chromed
CN Negro titanio / Titanium black

				€
1.1	**AG0132300R**	T-1000 / T-2000		110,00
	AG01323CNR			179,00
1.2	**AG0132500R**	L90-T		92,70
1.3	**AG0159700R**	T-1000 SQUARE		81,10
2.1	**AG0091307R**	T-1000 / T-2000		36,80
2.2	**AG0084200R**	L90-T		23,50
2.3	**AG0159800R**	T-1000 SQUARE		3,91
3	**AG0160100R**			3,32
	AG0160200R			3,70
4	**AG0132803R**			43,80
5.1	**AG0132900R**	T-1000		21,70
	AG01329CNR			28,00
5.2	**AG0132200R**	T-1000		22,60
	AG01322CNR			28,00

				€
5.3	**AG0132600R**	L90-T		114,00
5.4	**AG0133000R**	L90-T		114,00
5.5	**AG0134200R**	T-2000		36,80
5.6	**AG0134300R**	T-2000		36,80
5.7	**AG0159900R**	T-1000 SQUARE		33,20
5.8	**AG0160000R**	T-1000 SQUARE		33,20
6	**AG0120900R**			23,50
7	**AG0132003R**			20,80
8	**A525015803**			78,50
9	**AG0132107R**			41,70
10	**AG0030603R**			48,60
11	**AG0131903R**			22,60
12	**AG0132707R**			4,47
13	**AG0030303R**			66,50

Cala RocaBox

Griferías baño y ducha monomando / Single-lever bath & shower faucet

A5A0B6E
A5A2B6E

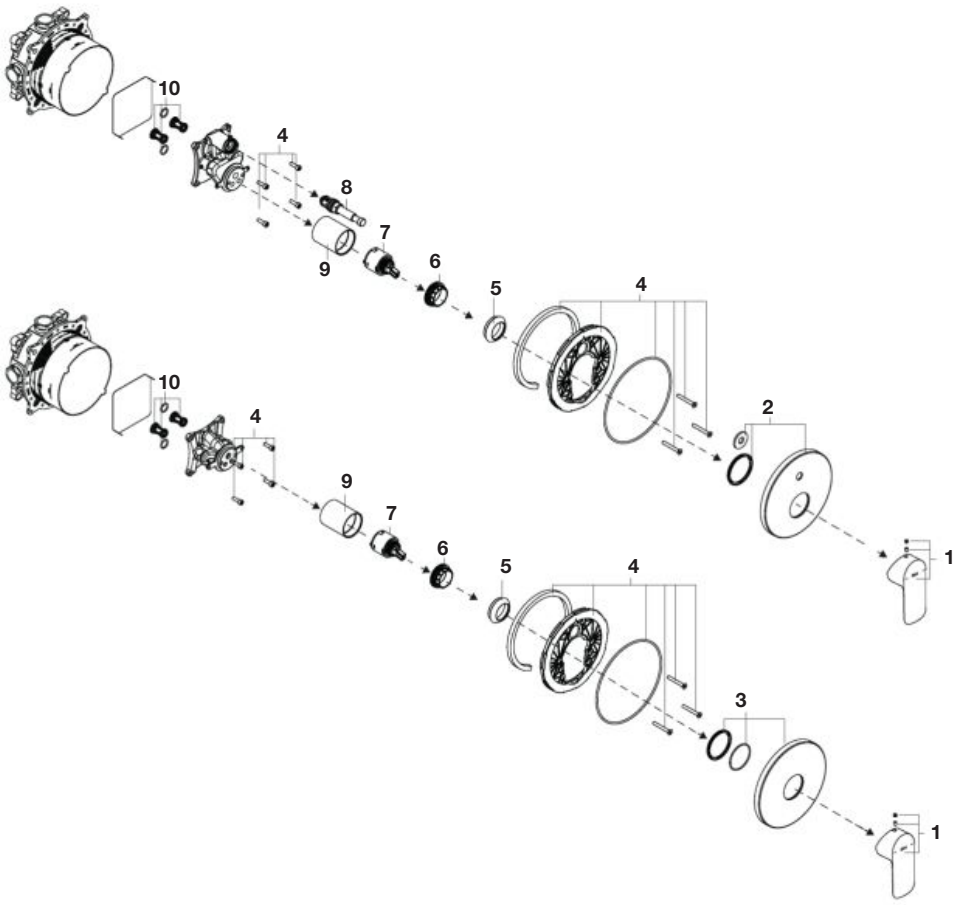

Los ultimos dígitos de la referencia de recambio indican el código del acabado:
Last digits of spare part reference indicate finish code:

00 Cromado / Chromed
NB Negro mate / Matt black

			€
1	**AG0226400R**		16,80
	AG02264NBR		30,60
2	**AG0121300R**		21,10
	AG01213NBR		44,20
3	**AG0121200R**		19,90
	AG01212NBR		43,80
4	**AG0120900R**		23,50
5	**AG0085300R**		18,00
	AG00853NBR		10,80
6	**A525023507**		4,23
7	**AG0110607R**		9,98
8	**A525006500**	Cromado / Chromed	23,30
	AG02186NBR		45,80
9	**A525006800**	Cromado / Chromed	20,50
	AG02189NBR		22,90
10	**AG0121000R**		21,70

Victoria Pro

Grifería para lavabo / Basin faucet

A5A3123

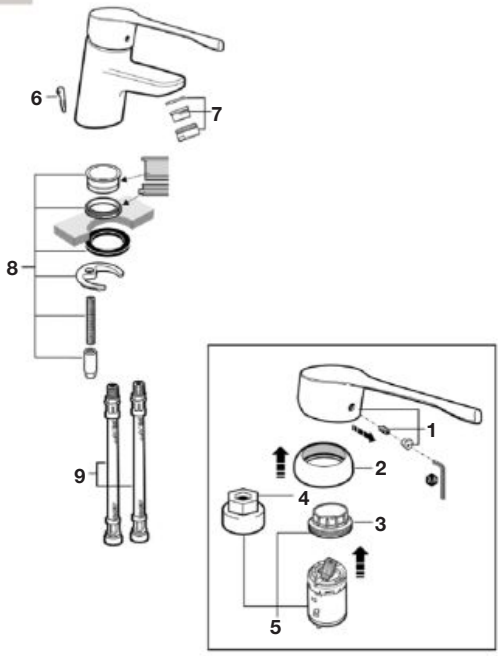

Grifería para baño y ducha / Bath and shower faucet

A5A0123

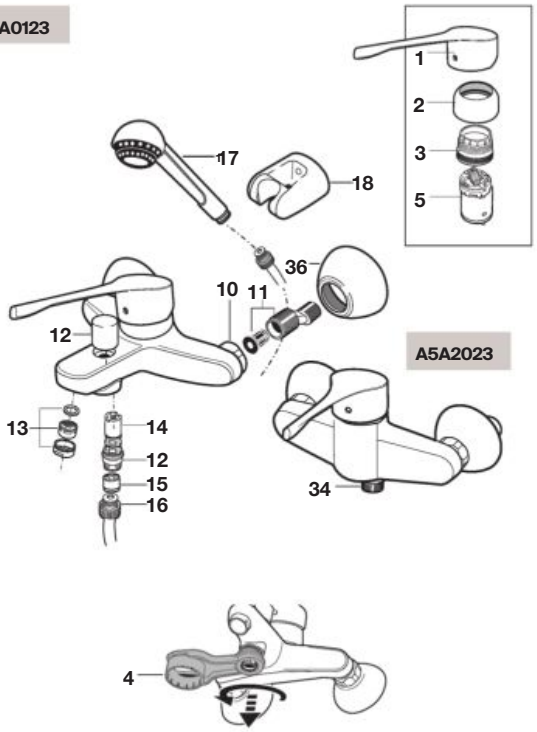

Grifería para lavabo / Basin faucet

A5A0323

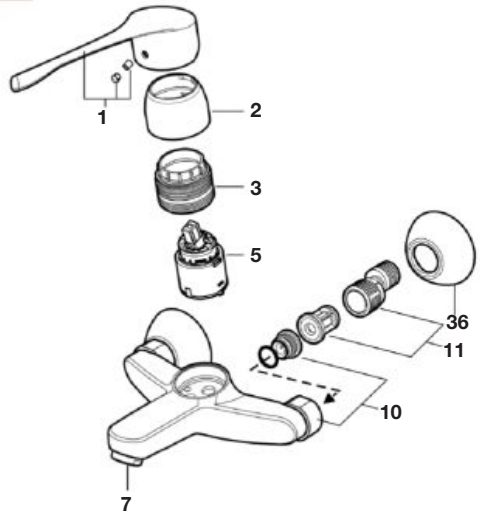

Grifería para cocina / Kitchen faucet

A5A8723

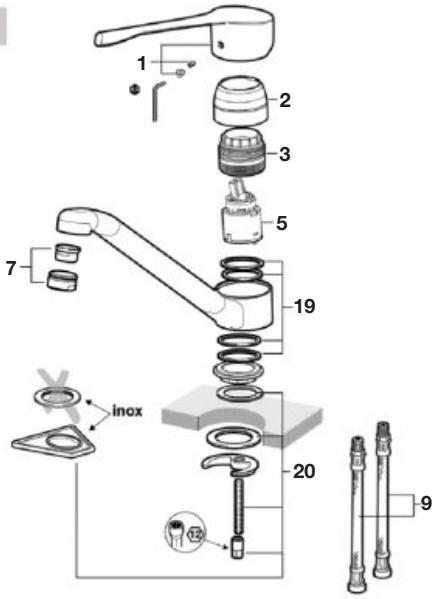

		€
1	**A525003000**	36,40
2	**AG0085300R**	18,00
3	**A525023507**	4,23
4	**A525005407**	7,44
5	**AG0053707R**	39,20
6	**A525004600**	8,20
7	**A525004700**	7,44
8	**A525004403**	7,92
9	**A525020309**	15,00

		€
10	**A525005200**	15,30
11	**A525005308**	13,50
12	**A525023200**	11,90
13	**A525003600**	4,85
14	**A525087300**	18,90
15	**A525005507**	7,44
16	**A525009800**	27,10
17	**A525007700**	8,75
18	**A525007800**	11,10

		€
19	**AG0004407R**	2,23
20	**A525006903**	8,56
21	**A525006600**	7,44
22	**AG0002200R**	45,00
23	**AG0017707R**	5,83
24	**AG0005800R**	100,00
25	**A525027803**	32,40
26	**AG0141207R**	19,20
27	**A525027609**	24,20

			€
28		**A525020409**	18,60
29		**AG0031803R**	36,20
30		**A525008503**	8,41
31		**AG0031700R**	26,70
32		**AG0000703R**	12,00
33		**A525005900**	59,20
34		**AG0005300R**	11,40
35		**AG0039007R**	2,82
36	2 un	**AG0085400R**	8,41

Victoria Pro

Grifería para cocina / Kitchen faucet

A5A8423

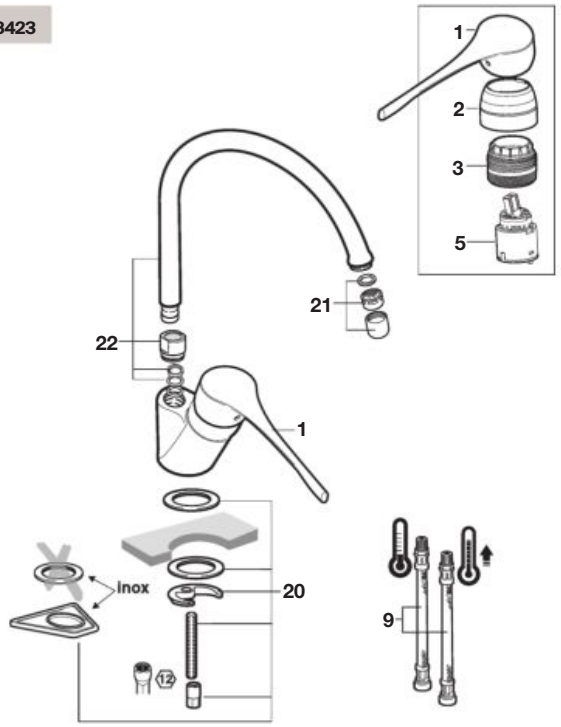

Grifería para cocina / Kitchen faucet

A5A7623

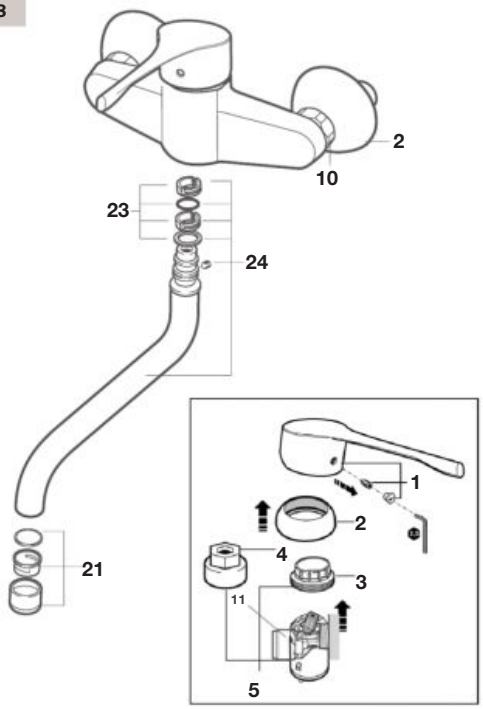

Grifería para cocina / Kitchen faucet

A5A8123

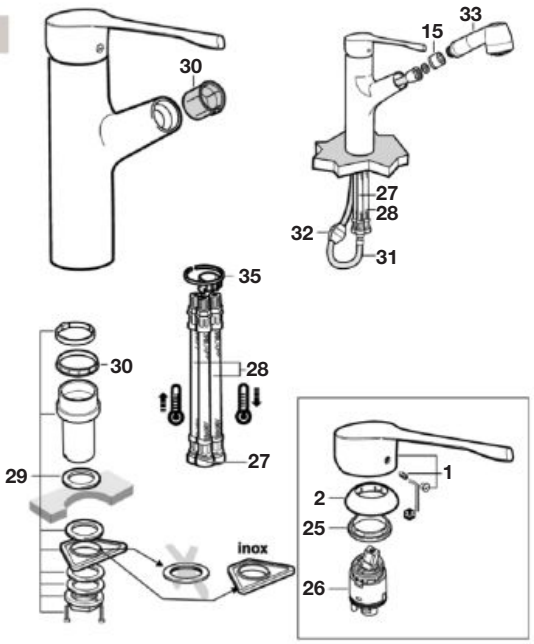

		€
1	**A525003000**	36,40
2	**AG0085300R**	18,00
3	**A525023507**	4,23
4	**A525005407**	7,44
5	**AG0053707R**	39,20
6	**A525004600**	8,20
7	**A525004700**	7,44
8	**A525004403**	7,92

		€
9	**A525020309**	15,00
10	**A525005200**	15,30
11	**A525005308**	13,50
12	**A525023200**	11,90
13	**A525003600**	4,85
14	**A525087300**	18,90
15	**A525005507**	7,44
16	**A525009800**	27,10

		€
17	**A525007700**	8,75
18	**A525007800**	11,10
19	**AG0004407R**	2,23
20	**A525006903**	8,56
21	**A525006600**	7,44
22	**AG0002200R**	45,00
23	**AG0017707R**	5,83
24	**AG0005800R**	100,00

		€
25	**A525027803**	32,40
26	**AG0141207R**	19,20
27	**A525027609**	24,20
28	**A525020409**	18,60
29	**AG0031803R**	36,20
30	**A525008503**	8,41
31	**AG0031700R**	26,70
32	**AG0000703R**	12,00

		€
33	**A525005900**	59,20
34	**AG0005300R**	11,40
35	**AG0039007R**	2,82
36	**AG0085400R**	8,41

M2-N

Grifería para lavabo y bidé / Basin and bidet faucet

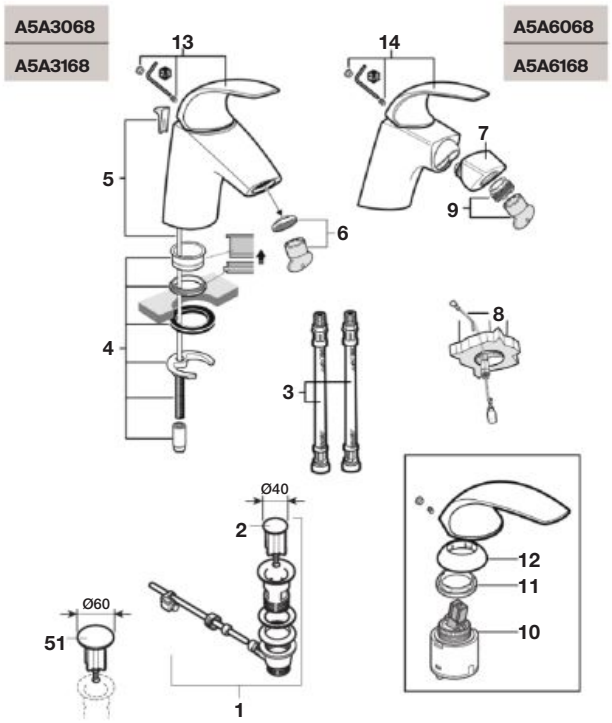

Grifería para baño y ducha / Bath and shower faucet

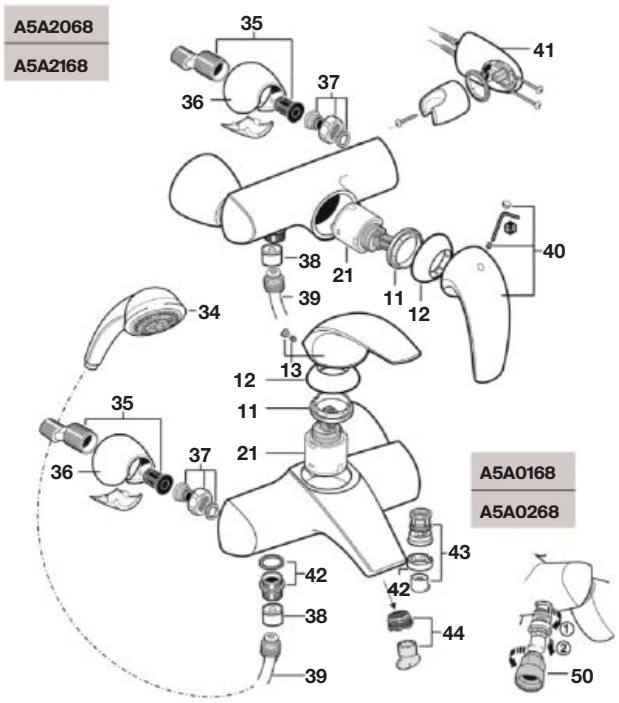

		€
1	**AG0075300R**	28,80
2	**AG0096200R**	7,48
3	**A525020309**	15,00
4	**A525021803**	13,20
5	**A525023000**	12,50
6	**A525003307**	7,92
7	**AG0037200R**	31,70
8	**A525004600**	8,20
9	**A525010807**	13,70
10	**AG0141207R**	19,20
11	**A525027803**	32,40

		€
12	**AG0032100R**	27,90
13	**AG0036900R**	73,80
14	**AG0039200R**	34,40
15	**A525025703**	31,50
17	**AG0037607R**	8,20
18	**AG0037503R**	76,40
19	**A525006903**	8,56
20	**A525020409**	18,60
21	**AG0053707R**	39,20
22	**AG0037100R**	32,00
23	**AG0017707R**	5,83

		€
24	**AG0037700R**	145,00
25	**AG0100007R**	19,50
26	**AG0020607R**	5,61
27	**AG0031700R**	26,70
28	**AG0037900R**	158,00
29	**A525005900**	59,20
30	**A525004700**	7,44
31	**AG0000503R**	19,90
32	**A525027609**	24,20
33	**AG0000703R**	12,00
34	**AG0041700R**	62,60

		€
35	**A525005308**	13,50
36	**AG0037300R**	23,50
37	**AG0002500R**	15,60
38	**A525005507**	7,44
39	**A525009800**	27,10
40	**AG0037000R**	34,20
41	**A526703910**	25,90
42	**A525024200**	9,74
43	**A525023600**	35,50
44	**A525087807**	10,90
45	**AG0037800R**	12,90

		€
46	**AG0038700R**	52,60
47	**AG0038800R**	67,40
48	**A525006500**	23,30
49	**AG0038900R**	70,20
50	**A525005407**	7,44
51	**AG0055800R**	14,40

M2-N

Grifería empotrable para baño y ducha
Wall-mounted bath and shower faucet

A5A2268

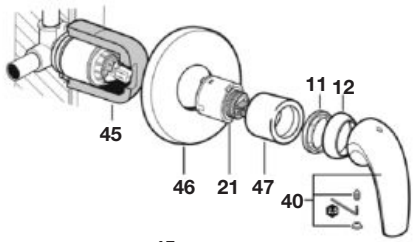

A5A0668

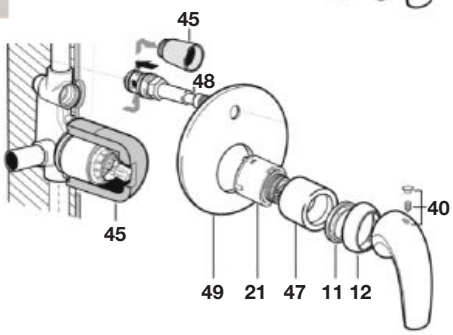

Grifería para cocina / Kitchen faucet

A5A8668

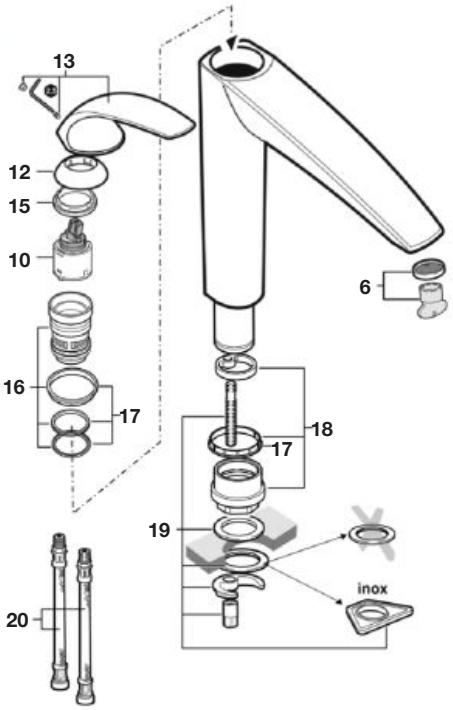

Grifería para cocina / Kitchen faucet

A5A8468

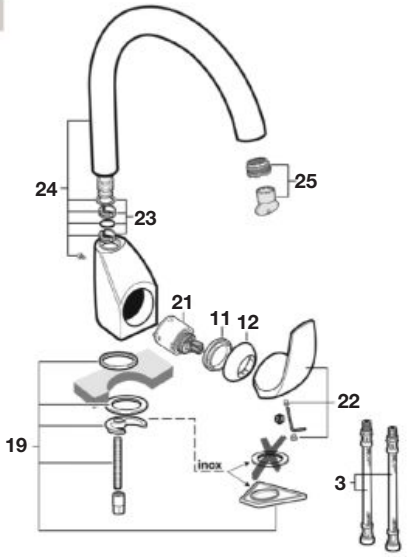

Grifería para cocina / Kitchen faucet

A5A8168

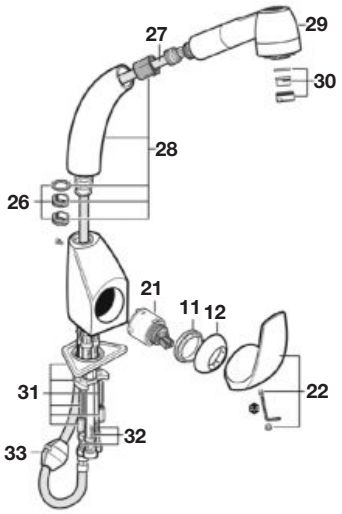

		€
1	**AG0075300R**	28,80
2	**AG0096200R**	7,48
3	**A525020309**	15,00
4	**A525021803**	13,20
5	**A525023000**	12,50
6	**A525003307**	7,92
7	**AG0037200R**	31,70
8	**A525004600**	8,20
9	**A525010807**	13,70
10	**AG0141207R**	19,20
11	**A525027803**	32,40

		€
12	**AG0032100R**	27,90
13	**AG0036900R**	73,80
14	**AG0039200R**	34,40
15	**A525025703**	31,50
17	**AG0037607R**	8,20
18	**AG0037503R**	76,40
19	**A525006903**	8,56
20	**A525020409**	18,60
21	**AG0053707R**	39,20
22	**AG0037100R**	32,00
23	**AG0017707R**	5,83

		€
24	**AG0037700R**	145,00
25	**AG0100007R**	19,50
26	**AG0020607R**	5,61
27	**AG0031700R**	26,70
28	**AG0037900R**	158,00
29	**A525005900**	59,20
30	**A525004700**	7,44
31	**AG0000503R**	19,90
32	**A525027609**	24,20
33	**AG0000703R**	12,00
34	**AG0041700R**	62,60

		€
35	**A525005308**	13,50
36	**AG0037300R**	23,50
37	**AG0002500R**	15,60
38	**A525005507**	7,44
39	**A525009800**	27,10
40	**AG0037000R**	34,20
41	**A526703910**	25,90
42	**A525024200**	9,74
43	**A525023600**	35,50
44	**A525087807**	10,90
45	**AG0037800R**	12,90

		€
46	**AG0038700R**	52,60
47	**AG0038800R**	67,40
48	**A525006500**	23,30
49	**AG0038900R**	70,20
50	**A525005407**	7,44
51	**AG0055800R**	14,40

Modena

Grifería para lavabo y bidé / Basin and bidet faucet

A5A3033

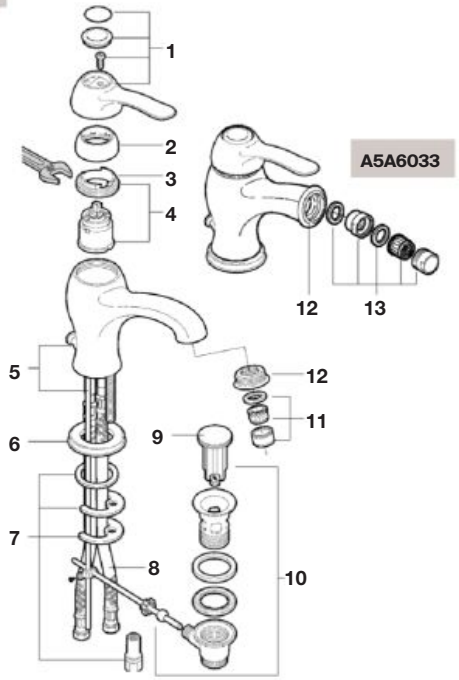

Grifería para baño y ducha / Bath and shower faucet

A5A0133

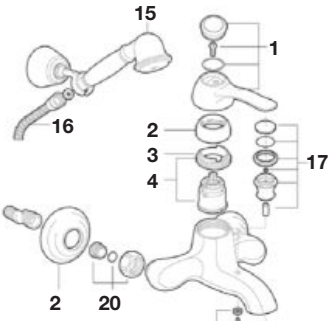

A5A2033



Grifería empotrable para baño y ducha
Wall-mounted bath and shower faucet

A5A0633

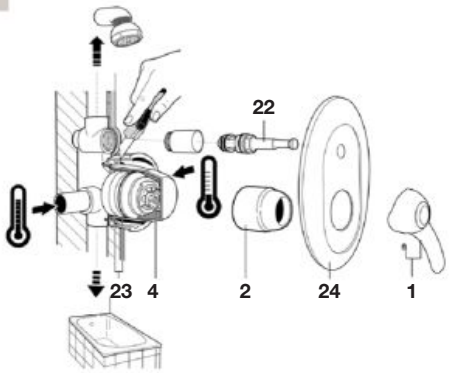

A5A2233

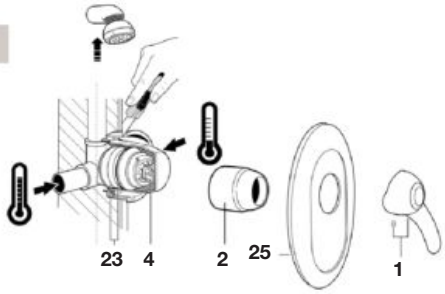

		€
1	**AG0009000R**	121,00
2	**AG0004500R**	65,90
3	**A525026503**	11,90
4	**A525081303**	49,90
5	**AG0004600R**	9,12

		€
6	**AG0031200R**	26,10
7	**AG0030903R**	6,77
8	**A525020309**	15,00
9	**AG0067700R**	18,30
10	**AG0004700R**	60,30

		€
11	**A525004700**	7,44
12	**AG0031000R**	7,41
13	**A525089100**	32,90
15	**AG0196500R**	77,70
16	**A525009800**	27,10

		€
17	**AG0009100R**	40,80
18	**AG0031100R**	11,10
19	**A525000800**	20,50
20	**AG0004900R**	27,10
22	**A525006500**	23,30

		€
23	**A525026703**	33,60
24	**AG0005400R**	55,90
25	**AG0004100R**	63,90

Moai

Grifería para lavabo y bidé / Basin and bidet faucet

A5A3046
A5A3146

A5A6046
A5A6146

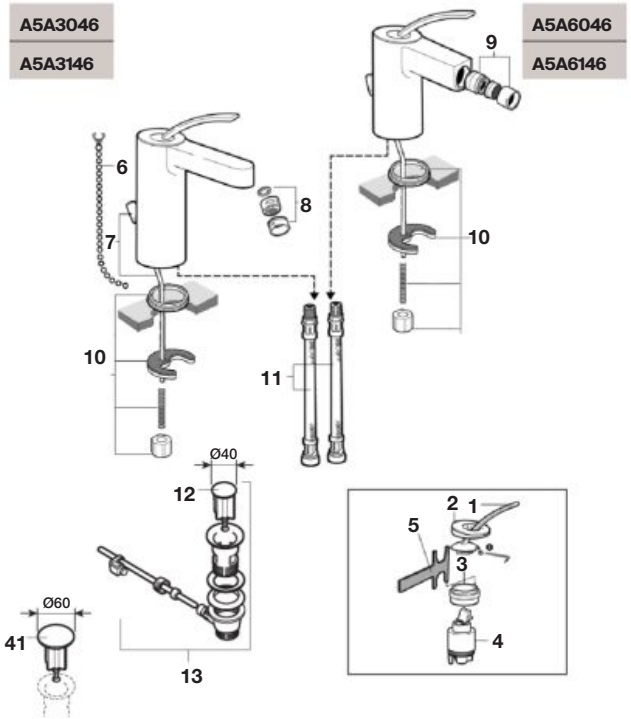

Grifería de caño alto para lavabo
Extended height basin faucet

A5A3446

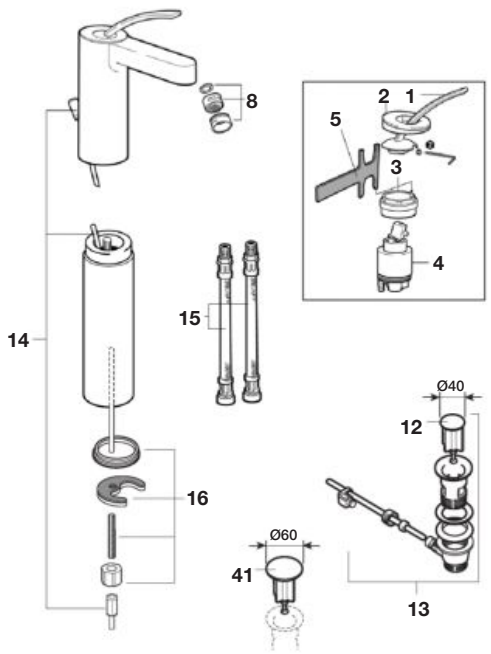

Grifería empotrable para lavabo
Wall-mounted basin faucet

A5A4746

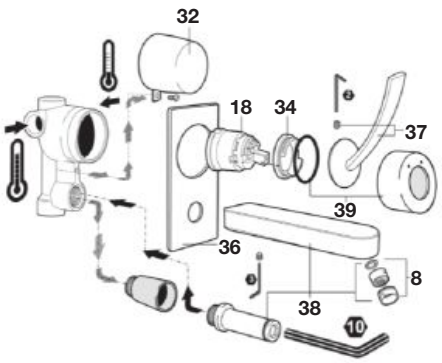

		€
1	**A525024900**	15,90
2	**A525025200**	11,20
3	**A525025703**	31,50
4	**AG0141207R**	19,20
5	**A525022503**	46,50
6	**A525004600**	8,20
7	**A525020600**	8,88
8	**A525008900**	4,41
9	**A525009000**	9,94

		€
10	**A525025303**	8,35
11	**A525020309**	15,00
12	**AG0096200R**	7,48
13	**AG0075300R**	28,80
14	**A525020700**	9,79
15	**A525020409**	18,60
16	**A525023403**	19,90
17	**A525026703**	33,60
18	**A525081303**	49,90

		€
19	**A525025907**	2,55
20	**A525026307**	13,60
22	**AG0068500R**	27,30
23	**A525023200**	11,90
24	**AG0068900R**	10,90
25	**A525087300**	18,90
26	**A525026200**	34,90
27	**A525005308**	13,50
28	**A525009800**	27,10

		€
29	**A525005407**	7,44
30	**A525006500**	23,30
31	**A525025400**	94,70
33	**A525026800**	67,30
34	**A525026503**	11,90
35	**A525025500**	66,80
36	**A525022000**	76,90
37	**A525025000**	14,30
38	**A525025600**	229,00

		€
39	**AG0004200R**	47,30
40	**AG0087100R**	6,94
41	**AG0055800R**	14,40

Moai

Grifería para baño y ducha / Bath and shower faucet

A5A0146

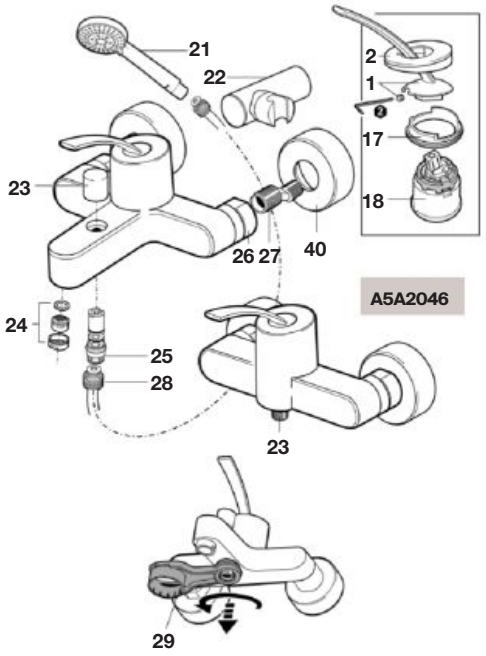

A5A2046

Grifería empotrable para baño y ducha
Wall-mounted bath and shower faucet

A5A0646

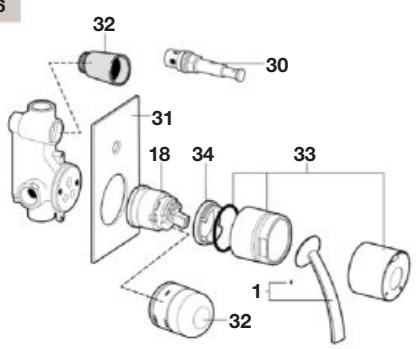

A5A2246

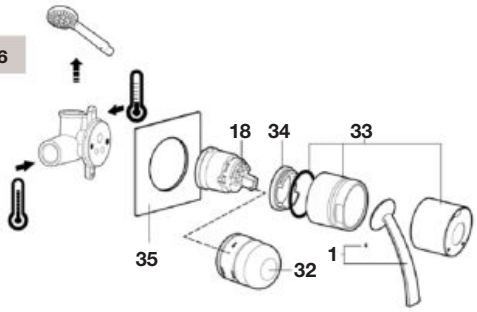

Grifería para cocina / Kitchen faucet

A5A8146

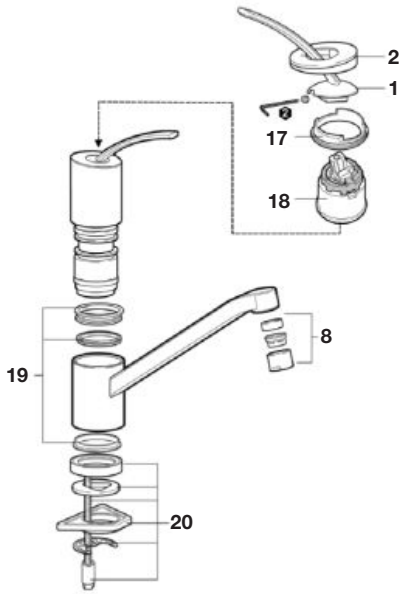

		€
1	**A525024900**	15,90
2	**A525025200**	11,20
3	**A525025703**	31,50
4	**AG0141207R**	19,20
5	**A525022503**	46,50
6	**A525004600**	8,20
7	**A525020600**	8,88
8	**A525008900**	4,41
9	**A525009000**	9,94

		€
10	**A525025303**	8,35
11	**A525020309**	15,00
12	**AG0096200R**	7,48
13	**AG0075300R**	28,80
14	**A525020700**	9,79
15	**A525020409**	18,60
16	**A525023403**	19,90
17	**A525026703**	33,60
18	**A525081303**	49,90

		€
19	**A525025907**	2,55
20	**A525026307**	13,60
21	**A5B1103C00**	-
22	**AG0068500R**	27,30
23	**A525023200**	11,90
24	**AG0068900R**	10,90
25	**A525087300**	18,90
26	**A525026200**	34,90
27	**A525005308**	13,50

		€
28	**A525009800**	27,10
29	**A525005407**	7,44
30	**A525006500**	23,30
31	**A525025400**	94,70
32	**A525029507**	N.D.
33	**A525026800**	67,30
34	**A525026503**	11,90
35	**A525025500**	66,80
36	**A525022000**	76,90

		€
37	**A525025000**	14,30
38	**A525025600**	229,00
39	**AG0004200R**	47,30
40	**AG0087100R**	6,94
41	**AG0055800R**	14,40

Moai

Grifería bimando para baño / Twin-lever bath faucet

A5A4446

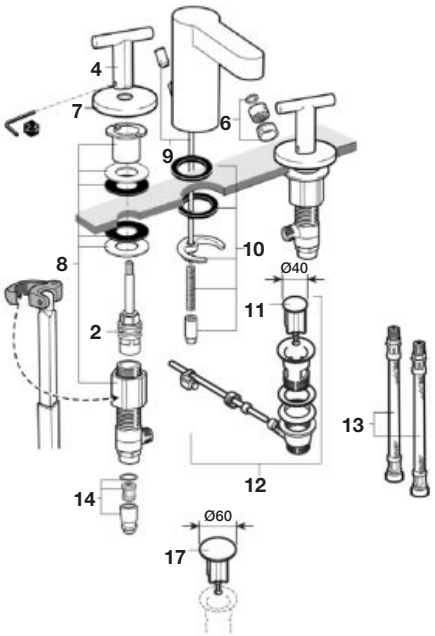

Grifería mural empotrable para baño
Wall-mounted bath faucet

A5A4646

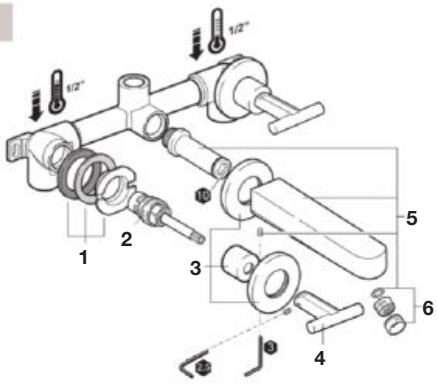

A5A4546

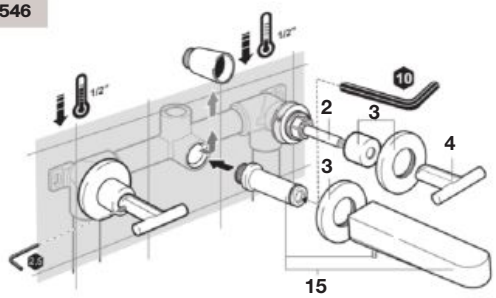

			€
1		**A525028903**	55,20
2		**A525021403**	48,00
3		**A525026900**	214,00
4	2 un	**A525026600**	20,80
5		**A525027000**	197,00

		€
6	**A525008900**	4,41
7	**A525027300**	69,70
8	**A525027903**	112,00
9	**A525020600**	8,88
10	**A525020003**	9,39

		€
11	**AG0096200R**	7,48
12	**AG0075300R**	28,80
13	**A525020509**	13,20
14	**A525024803**	38,30
15	**A525025600**	229,00

		€
17	**AG0055800R**	14,40

Moai

Mezclador termostático exterior para baño y ducha
Exterior tehrmostatic bath & shower mixer

A5A1146

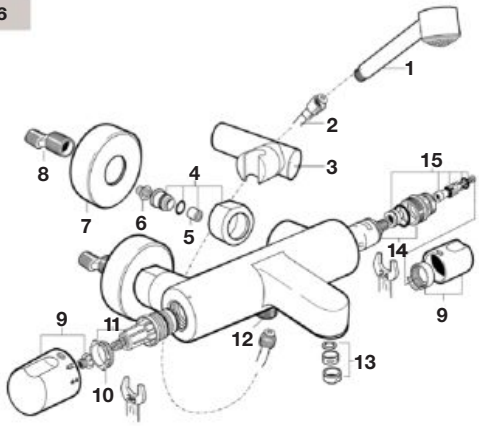

A5A1346

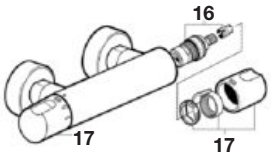

Mezclador termostático empotrable para baño y ducha
Wall-mounted thermostatic bath & shower mixer

A5A2846

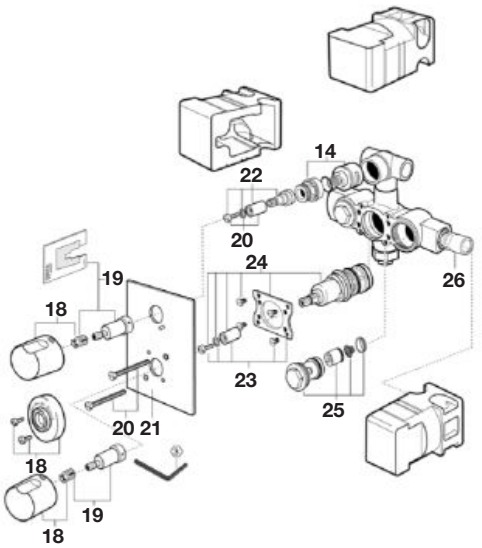

Mezclador termostático empotrable para baño o ducha
Wall-mounted thermostatic bath & shower mixer

A5A2946

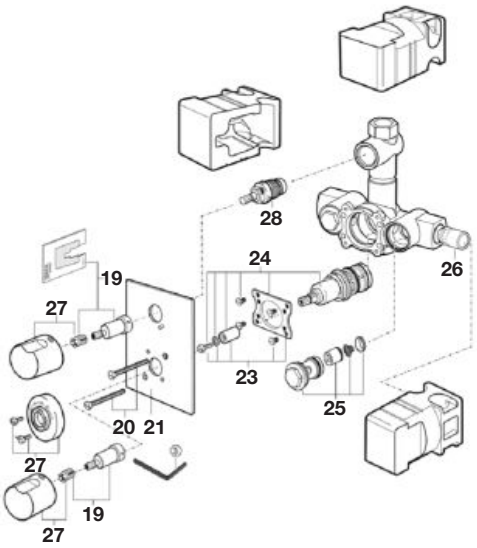

		€
1	**A5B6046C00**	N.D.
2	**A525009800**	27,10
3	**AG0068500R**	27,30
4	**AG0001400R**	40,60
5	**AG0021407R**	16,20
6	**A525027207**	3,88

		€
7	**AG0087100R**	6,94
8	**A525005308**	13,50
9	**AG0026500R**	37,70
10	**AG0020703R**	22,60
11	**A525028003**	81,70
12	**AG0000800R**	27,90

		€
13	**A525003600**	4,85
14	**AG0025300R**	57,30
15	**AG0025403R**	26,80
16	**A525092709**	73,20
17	**AG0026600R**	37,70
18	**AG0026700R**	44,20

		€
19	**A525024303**	16,50
20	**AG0028703R**	16,40
21	**AG0026900R**	280,00
22	**AG0026103R**	44,20
23	**AG0021103R**	18,30
24	**A525017303**	125,00

		€
25	**A525018003**	87,70
26	**A525024803**	38,30
27	**AG0026800R**	42,40
28	**A525098108**	24,40

Singles

Grifería para lavabo / Basin faucet

A5A3036

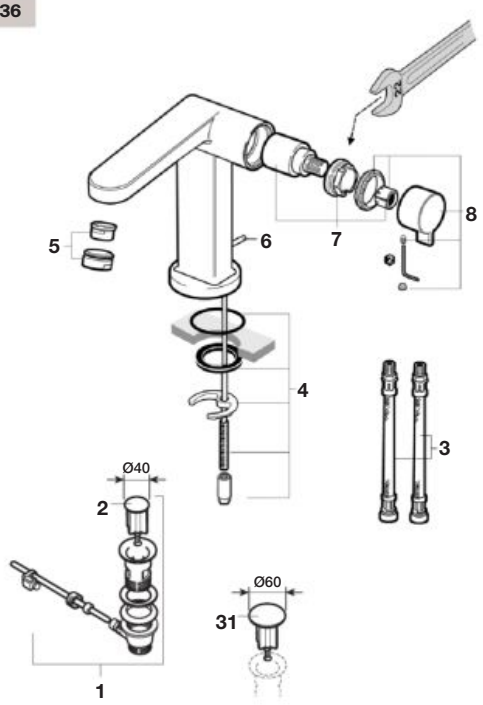

Grifería para lavabo / Basin faucet

A5A7536

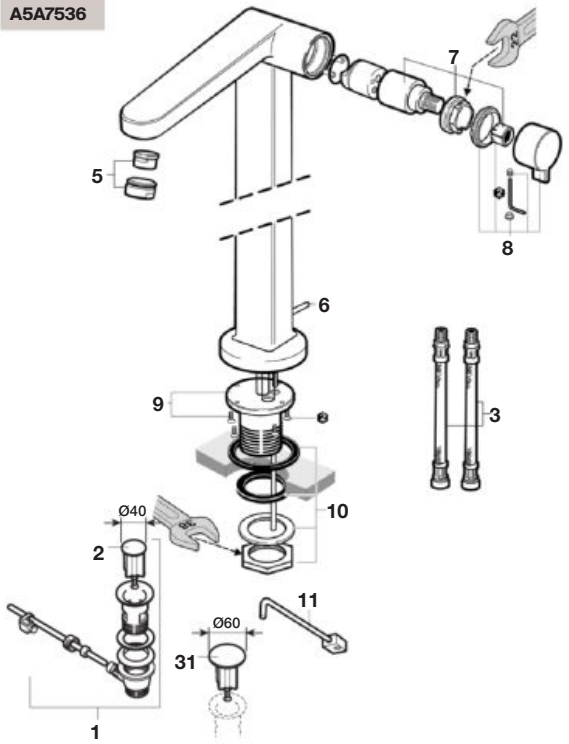

Grifería para lavabo / Basin faucet

A5A3819

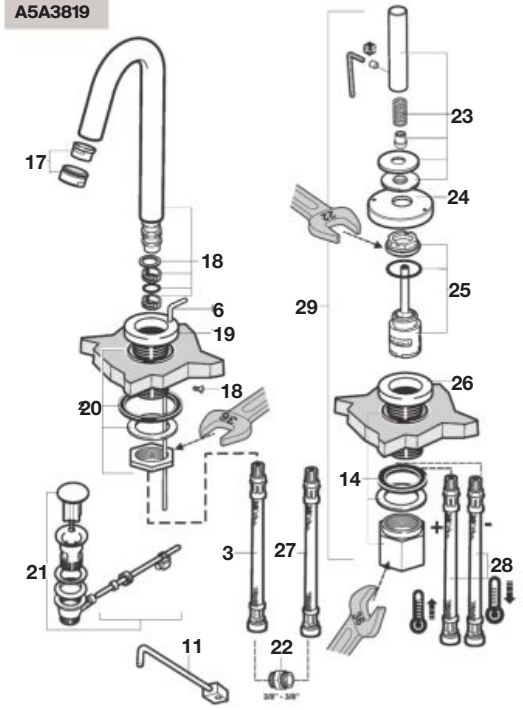

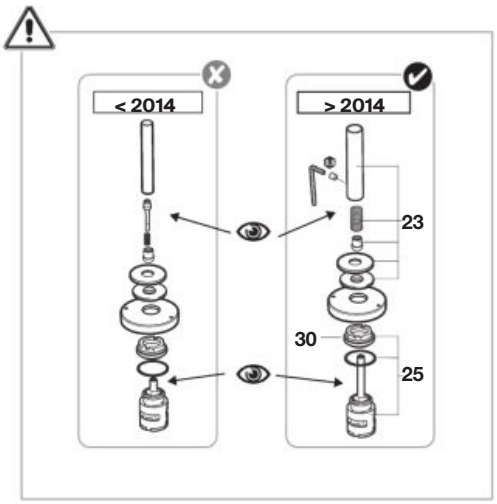

		€
1	**AG0075300R**	28,80
2	**AG0096200R**	7,48
3	**A525020309**	15,00
4	**AG0006003R**	14,80
5	**A525004700**	7,44
6	**AG0007219R**	11,30
7	**AG0007107R**	36,20

		€
8	**AG0007000R**	20,90
9	**AG0008903R**	92,90
10	**AG0033203R**	42,00
11	**AG0033300R**	30,00
12	**AG0007700R**	30,60
13	**AG0007300R**	112,00
14	**AG0007403R**	17,00

		€
15	**AG0008400R**	70,50
16	**AG0008009R**	10,60
17	**AG0007900R**	14,80
18	**AG0007600R**	185,00
19	**AG0008800R**	133,00
20	**AG0008103R**	N.D.
21	**AG0007800R**	44,20

		€
22	**AG0007503R**	38,20
23	**AG0110200R**	131,00
24	**AG0008600R**	92,90
25	**AG0110303R**	67,90
26	**AG0008703R**	471,00
27	**AG0010909R**	9,17
28	**AG0009209R**	17,70

		€
29	**AG0008300R**	544,00
30	**AG0109303R**	14,90
31	**AG0055800R**	14,40

BCN

Grifería para lavabo / Basin faucet

A5A3836

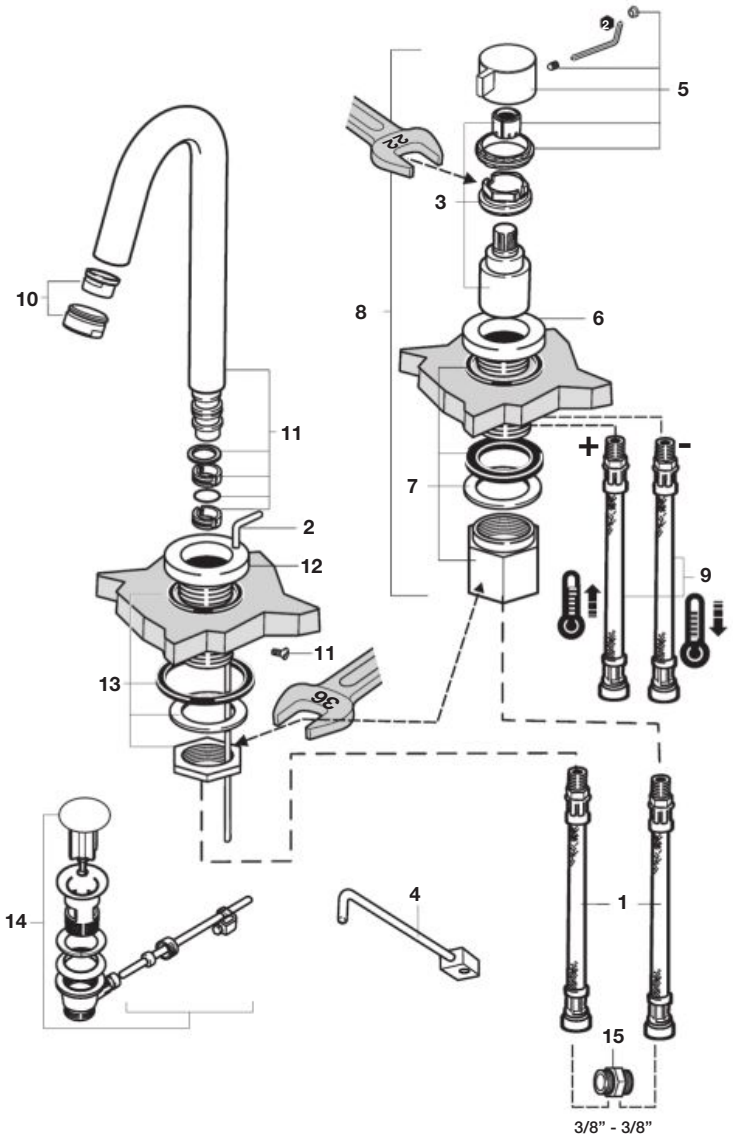

		€
1	**A525020309**	15,00
2	**AG0007219R**	11,30
3	**AG0007107R**	36,20

		€
4	**AG0033300R**	30,00
5	**AG0007700R**	30,60
6	**AG0007300R**	112,00

		€
7	**AG0007403R**	17,00
8	**AG0008400R**	70,50
9	**AG0008009R**	10,60

		€
10	**AG0007900R**	14,80
11	**AG0007600R**	185,00
12	**AG0008800R**	133,00

		€
13	**AG0008103R**	N.D.
14	**AG0007800R**	44,20
15	**AG0007503R**	38,20

Logica-N

Grifería para lavabo y bidé / Basin and bidet faucet

A5A3027
A5A3127

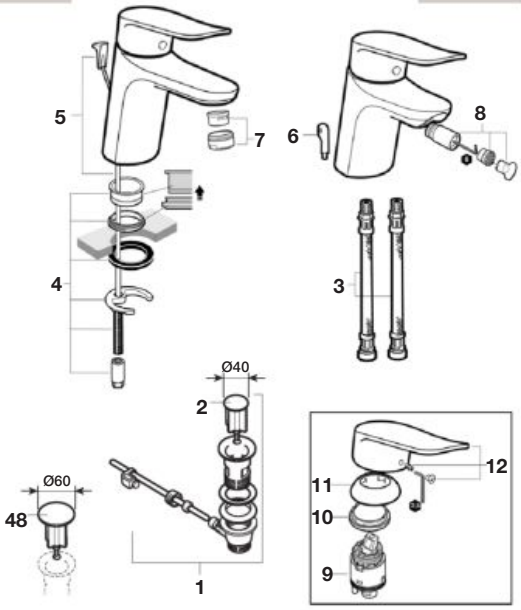

A5A6027
A5A6127

Grifería para baño y ducha / Bath and shower faucet

A5A2027

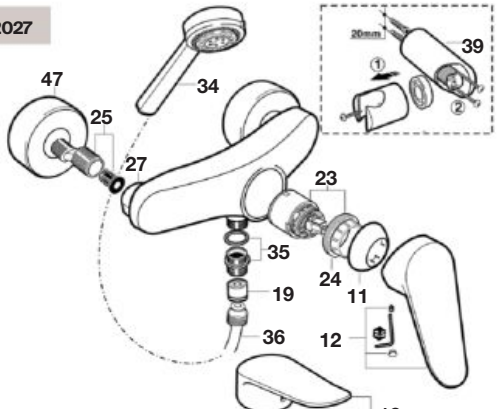

A5A0127

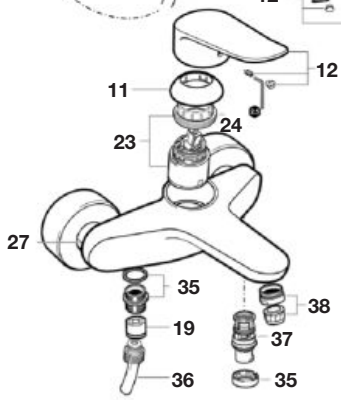

Grifería empotrable para baño y ducha
Wall-mounted bath and shower faucet

A5A2227

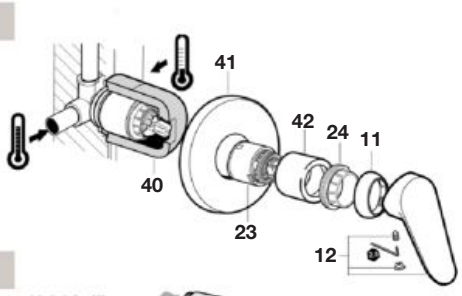

A5A0627

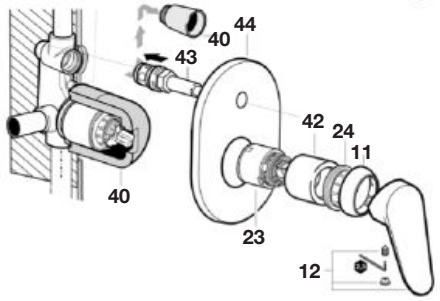

		€
1	**AG0075300R**	28,80
2	**AG0096200R**	7,48
3	**A525020309**	15,00
4	**A525004403**	7,92
5	**A525020600**	8,88
6	**A525004600**	8,20
7	**A525004700**	7,44
8	**A525003507**	38,20
9	**AG0141207R**	19,20
10	**A525027803**	32,40

		€
11	**AG0085300R**	18,00
12	**AG0018100R**	23,00
13	**AG0031803R**	36,20
14	**A525005407**	7,44
15	**A525008503**	8,41
16	**AG0037607R**	8,20
17	**AG0000703R**	12,00
18	**AG0082000R**	90,50
19	**A525005507**	7,44
20	**A525005900**	59,20

		€
21	**AG0017707R**	5,83
22	**AG0037700R**	145,00
23	**AG0053707R**	39,20
24	**A525023507**	4,23
25	**A525005308**	13,50
27	**A525005200**	15,30
28	**AG0004407R**	2,23
29	**A525006903**	8,56
30	**AG0037407R**	N.D.
31	**AG0037503R**	76,40

		€
32	**AG0040903R**	18,00
33	**A525020409**	18,60
34	**A5B1132C00**	N.D.
35	**A525024200**	9,74
36	**A525009800**	27,10
37	**A525023600**	35,50
38	**A525003600**	4,85
39	**AG0003700R**	13,70
40	**AG0001907R**	11,00
41	**A525002800**	37,60

		€
42	**A525006800**	20,50
43	**A525006500**	23,30
44	**A525002700**	47,20
45	**AG0100007R**	19,50
46	**AG0081903R**	43,30
47	**AG0087100R**	6,94
48	**AG0055800R**	14,40

Logica-N

Grifería para cocina / Kitchen faucet

A5A8127

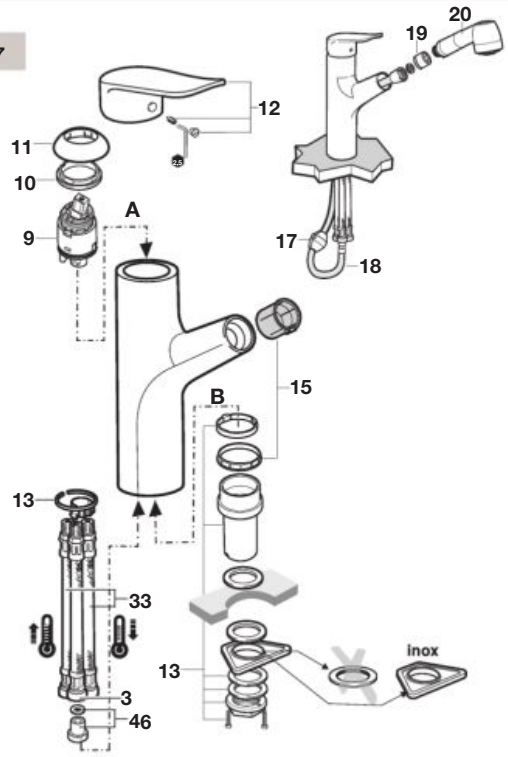

Grifería para cocina / Kitchen faucet

A5A8727

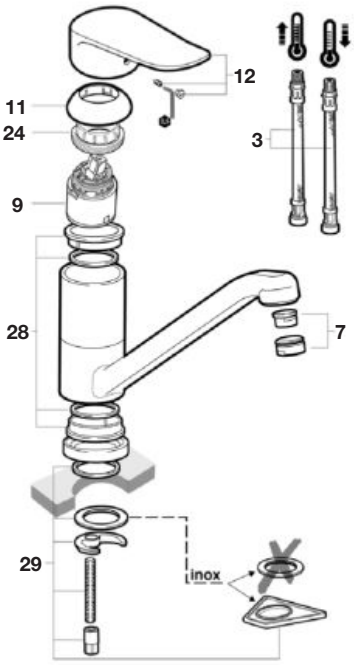

Grifería para cocina / Kitchen faucet

A5A7627

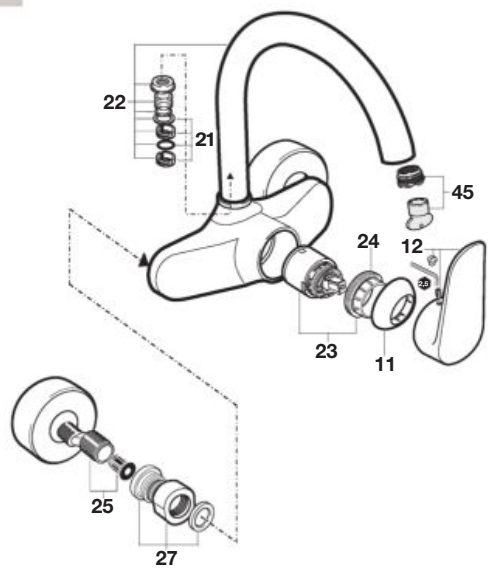

Grifería para cocina / Kitchen faucet

A5A8627

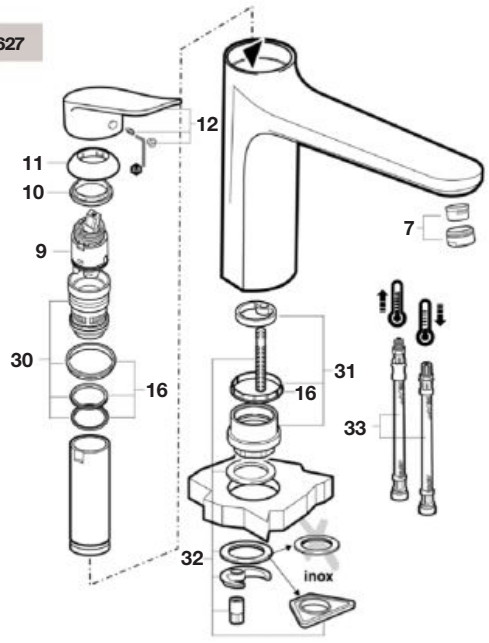

		€
1	**AG0075300R**	28,80
2	**AG0096200R**	7,48
3	**A525020309**	15,00
4	**A525004403**	7,92
5	**A525020600**	8,88
6	**A525004600**	8,20
7	**A525004700**	7,44
8	**A525003507**	38,20
9	**AG0141207R**	19,20
10	**A525027803**	32,40

		€
11	**AG0085300R**	18,00
12	**AG0018100R**	23,00
13	**AG0031803R**	36,20
14	**A525005407**	7,44
15	**A525008503**	8,41
16	**AG0037607R**	8,20
17	**AG0000703R**	12,00
18	**AG0082000R**	90,50
19	**A525005507**	7,44
20	**A525005900**	59,20

		€
21	**AG0017707R**	5,83
22	**AG0037700R**	145,00
23	**AG0053707R**	39,20
24	**A525023507**	4,23
25	**A525005308**	13,50
27	**A525005200**	15,30
28	**AG0004407R**	2,23
29	**A525006903**	8,56
31	**AG0037503R**	76,40
32	**AG0040903R**	18,00

		€
33	**A525020409**	18,60
35	**A525024200**	9,74
36	**A525009800**	27,10
37	**A525023600**	35,50
38	**A525003600**	4,85
39	**AG0003700R**	13,70
40	**AG0001907R**	11,00
41	**A525002800**	37,60
42	**A525006800**	20,50
43	**A525006500**	23,30

		€
44	**A525002700**	47,20
45	**AG0100007R**	19,50
46	**AG0081903R**	43,30
47	**AG0087100R**	6,94
48	**AG0055800R**	14,40

Monodin

Grifería para lavabo y bidé / Basin and bidet faucet

A5A3007
A5A3107

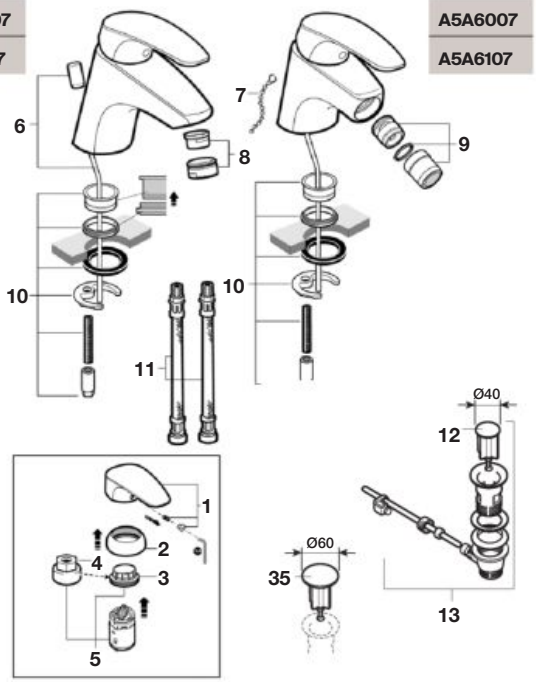

A5A6007
A5A6107

Grifería para baño y ducha / Bath and shower faucet

A5A2007
A5A0107

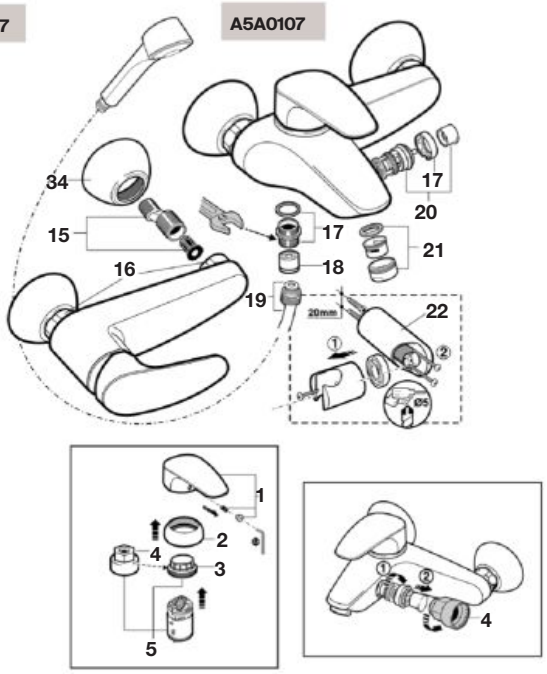

Grifería empotrable para baño y ducha
Wall-mounted bath and shower faucet

A5A2207

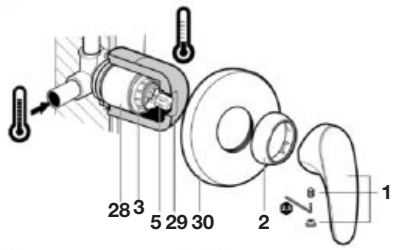

A5A0607

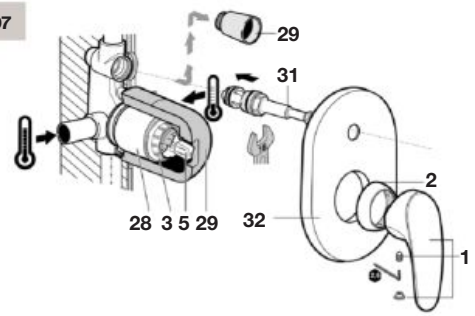

		€
1	**AG0005600R**	28,90
2	**AG0085300R**	18,00
3	**A525023507**	4,23
4	**A525005407**	7,44
5	**AG0053707R**	39,20
6	**AG0003600R**	7,61
7	**A525004600**	8,20

		€
8	**A525002900**	9,08
9	**A525010900**	6,24
10	**A525004403**	7,92
11	**A525020309**	15,00
12	**AG0096200R**	7,48
13	**AG0075300R**	28,80
15	**A525005308**	13,50

		€
16	**A525005200**	15,30
17	**A525024200**	9,74
18	**A525005507**	7,44
19	**A525009800**	27,10
20	**A525023600**	35,50
21	**A525003600**	4,85
22	**AG0003700R**	13,70

		€
23	**AG0004407R**	2,23
24	**A525006903**	8,56
25	**AG0005700R**	98,30
26	**A525006600**	7,44
27	**AG0005800R**	100,00
28	**A525006800**	20,50
29	**AG0001907R**	11,00

		€
30	**A525002800**	37,60
31	**A525006500**	23,30
32	**A525002700**	47,20
33	**AG0017707R**	5,83
34	**AG0085400R**	8,41
35	**AG0055800R**	14,40

Monodin

Grifería para cocina / Kitchen faucet

A5A8707

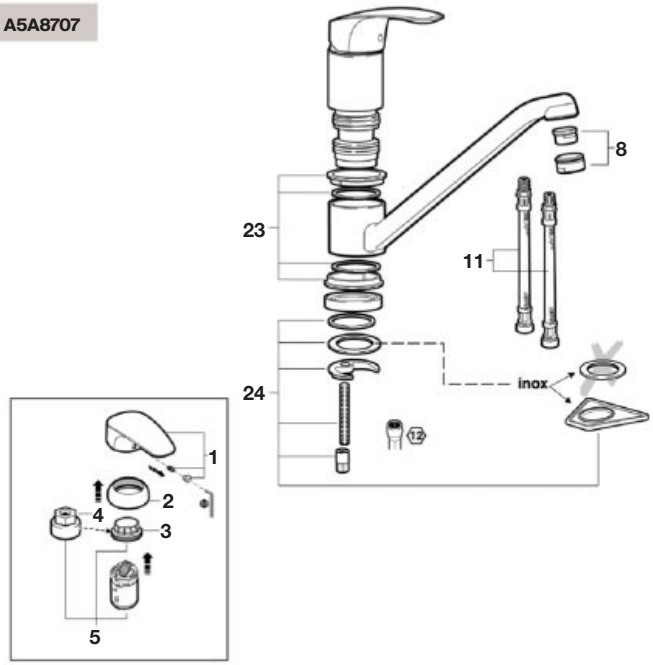

Grifería para cocina / Kitchen faucet

A5A8407

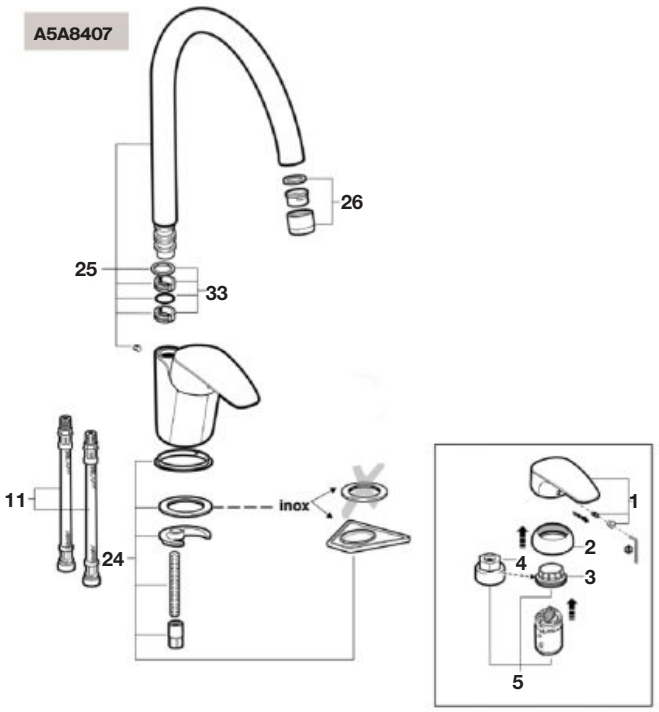

Grifería para cocina / Kitchen faucet

A5A7607

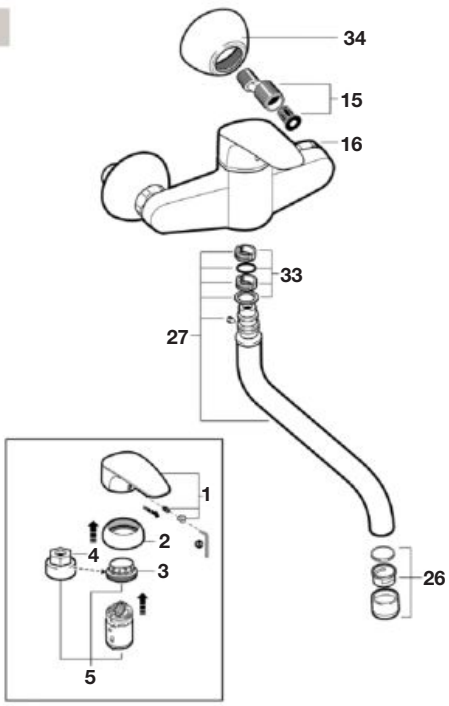

		€
1	**AG0005600R**	28,90
2	**AG0085300R**	18,00
3	**A525023507**	4,23
4	**A525005407**	7,44
5	**AG0053707R**	39,20
6	**AG0003600R**	7,61
7	**A525004600**	8,20
8	**A525002900**	9,08
9	**A525010900**	6,24

		€
10	**A525004403**	7,92
11	**A525020309**	15,00
12	**AG0096200R**	7,48
13	**AG0075300R**	28,80
15	**A525005308**	13,50
16	**A525005200**	15,30
17	**A525024200**	9,74
18	**A525005507**	7,44
19	**A525009800**	27,10

		€
20	**A525023600**	35,50
21	**A525003600**	4,85
22	**AG0003700R**	13,70
23	**AG0004407R**	2,23
24	**A525006903**	8,56
25	**AG0005700R**	98,30
26	**A525006600**	7,44
27	**AG0005800R**	100,00
28	**A525006800**	20,50

			€
29		**AG0001907R**	11,00
30		**A525002800**	37,60
31		**A525006500**	23,30
32		**A525002700**	47,20
33		**AG0017707R**	5,83
34	2 un	**AG0085400R**	8,41
35		**AG0055800R**	14,40

Florentina

Grifería para lavabo y bidé / Basin and bidet faucet

A5072118A0 **A5075032A0**

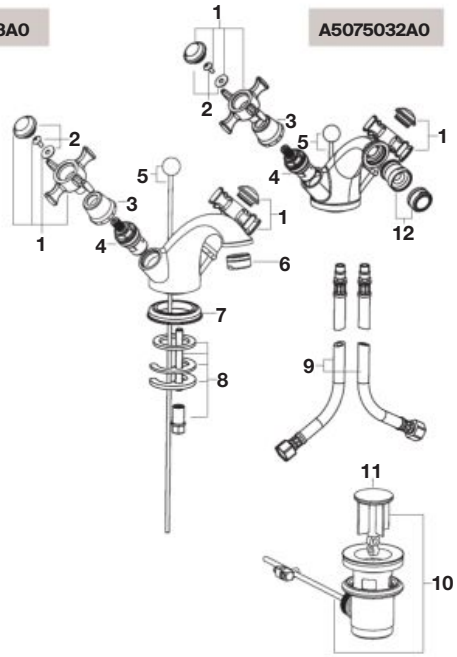

Grifería para lavabo / Basin faucet

A5072119A0

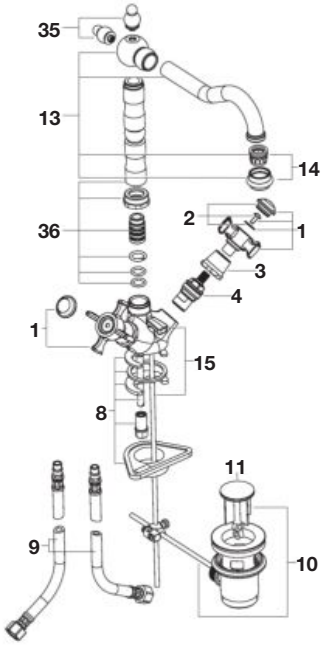

Grifería para lavabo / Basin faucet

A5072120A0

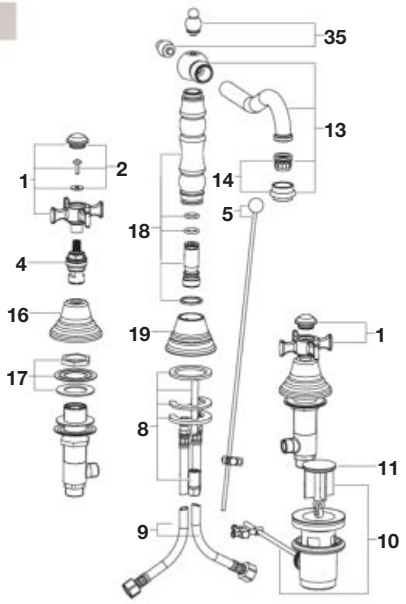

Grifería para baño y ducha / Bath & shower faucet

A5062221A0

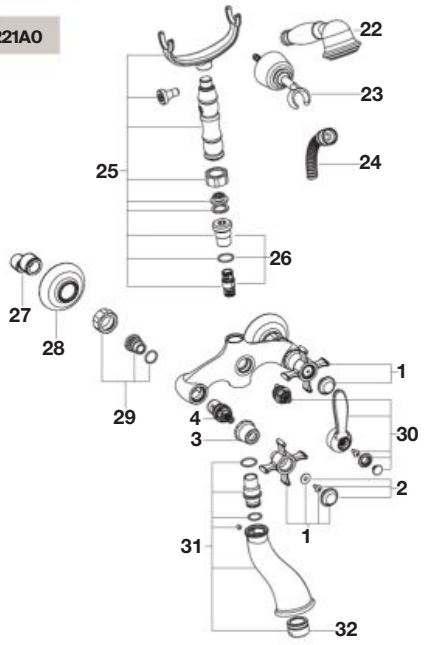

		€
1	**AG0046300R**	72,70
2	**AG0046200R**	46,90
3	**AG0053100R**	7,88
4	**A525092709**	73,20
5	**AG0051200R**	11,70
6	**A525004700**	7,44
7	**AG0047200R**	9,85
8	**AG0046407R**	30,00

		€
9	**A525020309**	15,00
10	**AG0004700R**	60,30
11	**AG0067700R**	18,30
12	**A525089100**	32,90
13	**AG0052200R**	270,00
14	**AG0057100R**	15,50
15	**AG0057800R**	11,70
16	**AG0052500R**	35,10

		€
17	**AG0047300R**	35,10
18	**AG0052300R**	150,00
19	**AG0052400R**	119,00
20	**AG0057200R**	207,00
21	**AG0046500R**	23,60
22	**AG0196500R**	77,70
23	**AG0053000R**	N.D.
24	**A525009800**	27,10

		€
25	**AG0057300R**	196,00
26	**AG0053200R**	30,40
27	**AG0057408R**	30,40
28	**AG0057600R**	22,00
29	**AG0045700R**	19,40
30	**AG0057700R**	130,00
31	**AG0046800R**	160,00
32	**A525000800**	20,50

		€
33	**AG0057900R**	19,00
34	**AG0058000R**	14,00
35	**AG0068300R**	27,30
36	**AG0068200R**	205,00

Florentina

Grifería para ducha / Shower faucet

A5062222A0

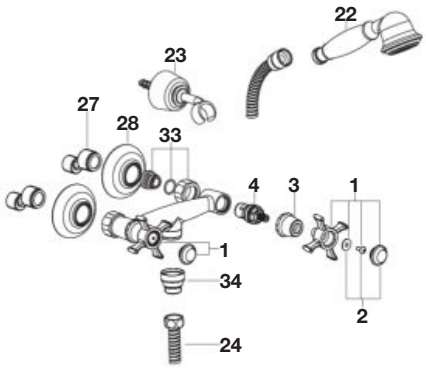

Grifería para cocina / Kitchen faucet

A5061388A0

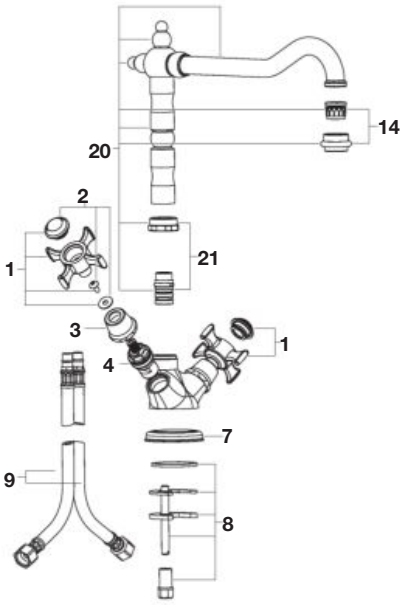

		€
1	**AG0046300R**	72,70
2	**AG0046200R**	46,90
3	**AG0053100R**	7,88
4	**A525092709**	73,20
5	**AG0051200R**	11,70
6	**A525004700**	7,44
7	**AG0047200R**	9,85
8	**AG0046407R**	30,00

		€
9	**A525020309**	15,00
10	**AG0004700R**	60,30
11	**AG0067700R**	18,30
12	**A525089100**	32,90
13	**AG0052200R**	270,00
14	**AG0057100R**	15,50
15	**AG0057800R**	11,70
16	**AG0052500R**	35,10

		€
17	**AG0047300R**	35,10
18	**AG0052300R**	150,00
19	**AG0052400R**	119,00
20	**AG0057200R**	207,00
21	**AG0046500R**	23,60
22	**AG0196500R**	77,70
23	**AG0053000R**	N.D.
24	**A525009800**	27,10

		€
25	**AG0057300R**	196,00
26	**AG0053200R**	30,40
27	**AG0057408R**	30,40
28	**AG0057600R**	22,00
29	**AG0045700R**	19,40
30	**AG0057700R**	130,00
31	**AG0046800R**	160,00
32	**A525000800**	20,50

		€
33	**AG0057900R**	19,00
34	**AG0058000R**	14,00
35	**AG0068300R**	27,30
36	**AG0068200R**	205,00

Element

Grifería para lavabo y bidé / Basin and bidet faucet

A5A3562

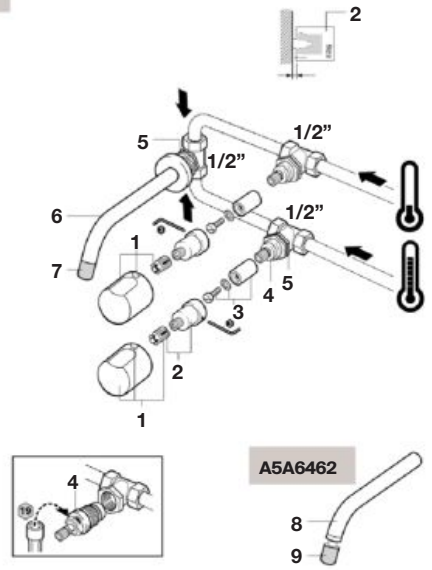

Grifería para baño y ducha / Bath & shower faucet

A5A2762

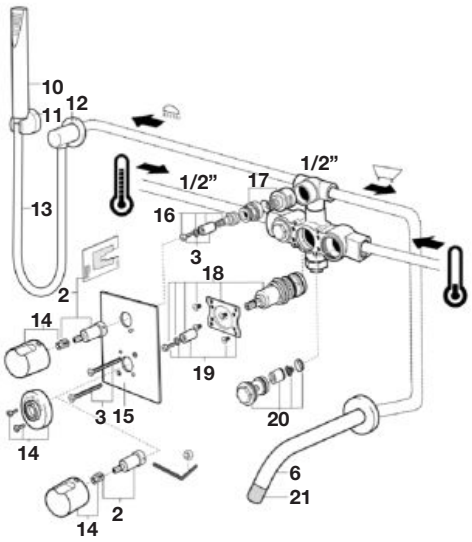

Grifería para baño y ducha / Bath & shower faucet

A5A2862

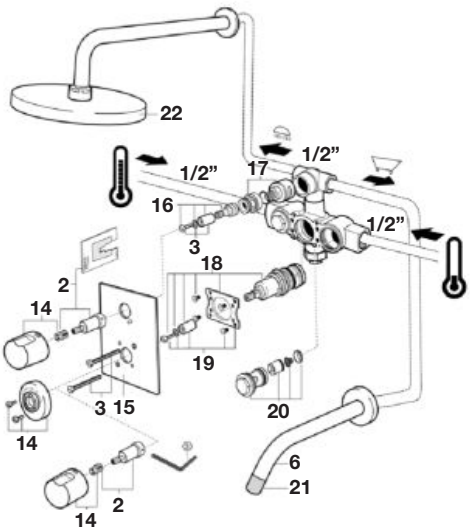

Grifería para baño y ducha / Bath & shower faucet

A5A2962

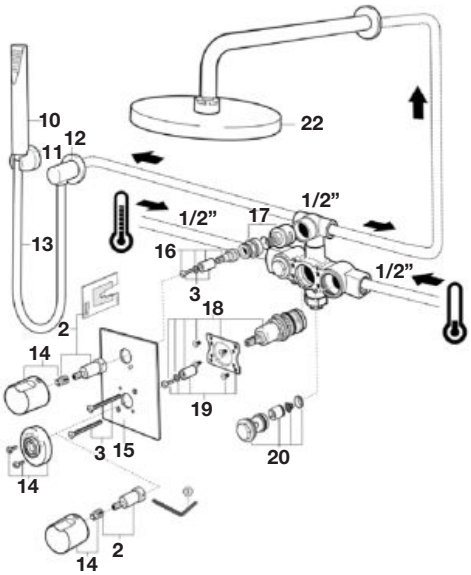

		€
1	**AG0029500R**	15,80
2	**A525024303**	16,50
3	**AG0028703R**	16,40
4	**A525098108**	24,40
5	**AG0029603R**	8,80

		€
6	**AG0029700R**	133,00
7	**A525009400**	11,30
8	**AG0029800R**	149,00
9	**A525009500**	27,90
10	**A5B9047C00**	-

		€
11	**A526704010**	13,30
12	**AG0029900R**	80,90
13	**A525009800**	27,10
14	**AG0026700R**	44,20
15	**AG0026900R**	280,00

		€
16	**AG0026103R**	44,20
17	**AG0025300R**	57,30
18	**A525017303**	125,00
19	**AG0021103R**	18,30
20	**A525018003**	87,70

		€
21	**A525009600**	7,61
22	**A5B9750C00**	N.D.

Brava

Grifería para lavabo / Basin faucet

A5A3030
A5A3130

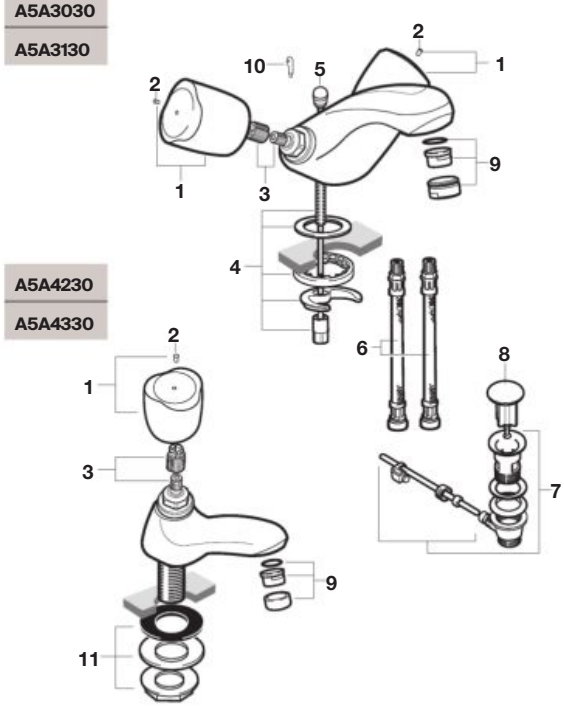

A5A4230
A5A4330

Grifería para lavabo / Basin faucet

A5A3430
A5A3530

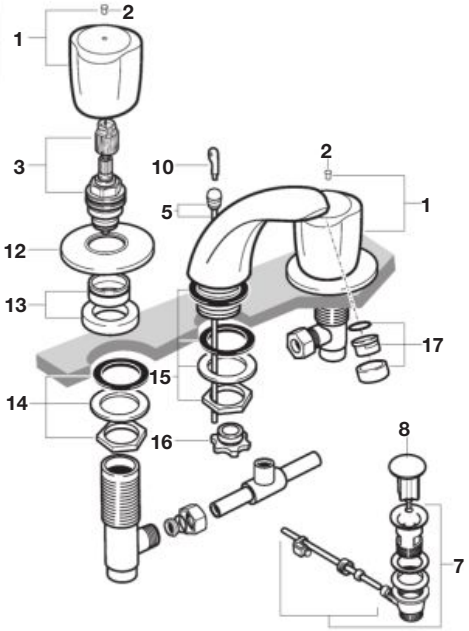

Grifería para bidé / Bidet faucet

A5A6030
A5A6130

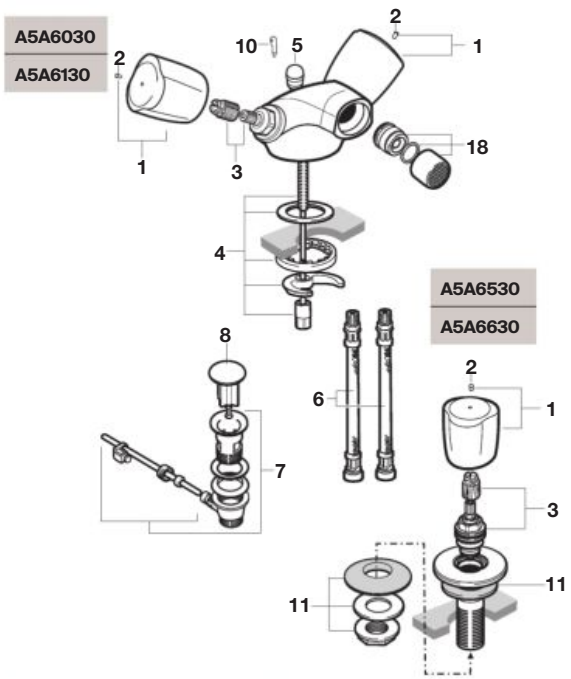

A5A6530
A5A6630

Grifería para ducha y baño / Bath & shower faucet

A5A0130

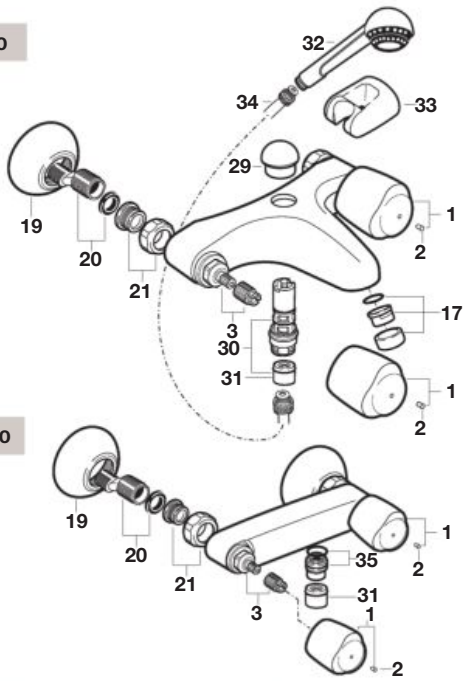

A5A2030

		€
1	AG0025700R	8,67
2	AG0058307R	2,68
3	AG0018208R	12,70
4	AG0045903R	10,30
5	AG0046000R	6,14
6	A525020309	15,00
7	A525021200	31,20
8	AG0055800R	14,40
9	A525004700	7,44

		€
10	A525004600	8,20
11	AG0049803R	12,00
12	AG0067400R	N.D.
13	AG0067500R	N.D.
14	AG0049903R	19,90
15	AG0050003R	10,50
16	AG0050207R	4,91
17	A525004700	7,44
18	A525010900	6,24

		€
19	AG0085400R	8,41
20	AG0050507R	51,40
21	AG0002500R	15,60
22	A525084600	55,30
23	A525006600	7,44
24	A525084000	60,50
25	AG0067600R	60,90
26	AG0027000R	60,90
27	A525084400	134,00

		€
28	A525084200	60,50
29	AG0005300R	11,40
30	A525087300	18,90
31	A525005507	7,44
32	A525007700	8,75
33	A525007800	11,10
34	A525009800	27,10
35	AG0036800R	3,71
36	AG0050603R	3,88

		€
37	AG0029400R	2,74
38	AG0050700R	7,73
39	A525096700	9,53
40	AG0050800R	16,10
41	AG0050903R	6,05
42	AG0051003R	72,30

Brava

Grifería para lavadero y cocina / Kitchen & laundry faucet

A5A7430

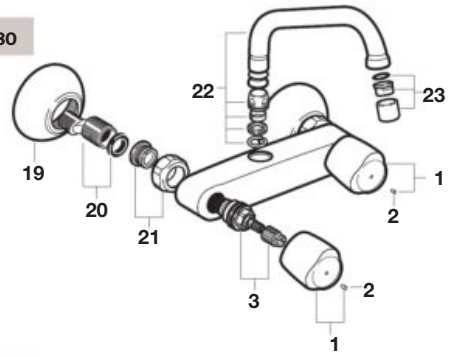

A5A7730

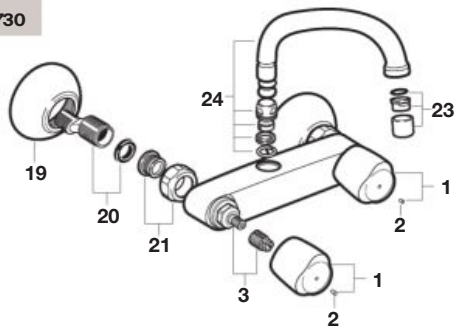

Grifería para cocina / Kitchen faucet

A5A7630

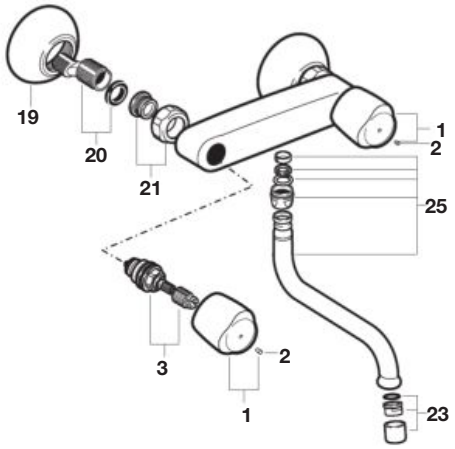

Grifería para cocina y lavadero / Kitchen & laundry faucet

A5A8330

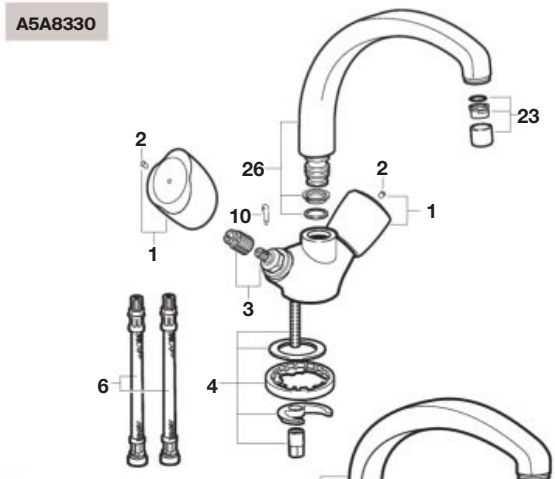

A5A7530

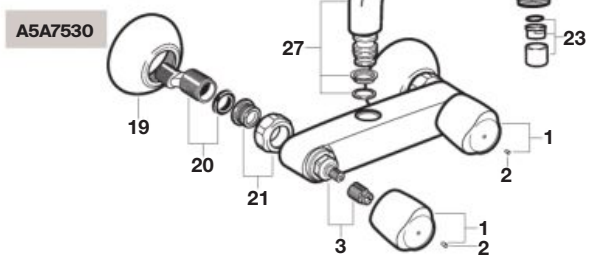

Grifería para cocina y lavadero / Kitchen & laundry faucet

A5A8430

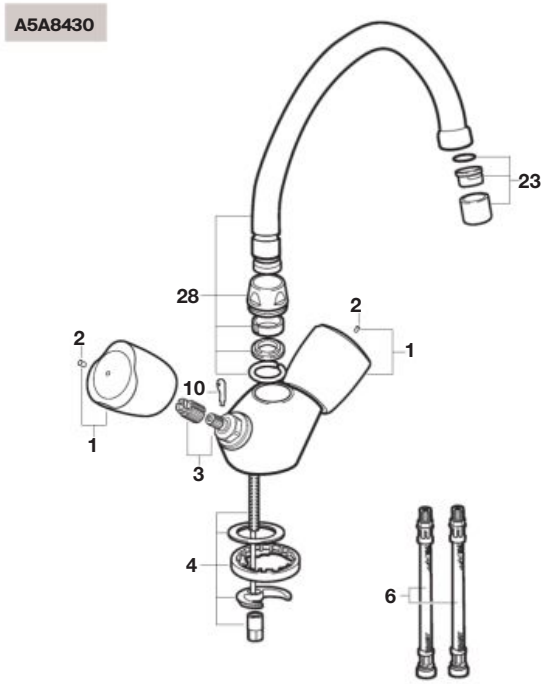

		€
1	**AG0025700R**	8,67
2	**AG0058307R**	2,68
3	**AG0018208R**	12,70
4	**AG0045903R**	10,30
5	**AG0046000R**	6,14
6	**A525020309**	15,00
7	**A525021200**	31,20
8	**AG0055800R**	14,40
9	**A525004700**	7,44

		€
10	**A525004600**	8,20
11	**AG0049803R**	12,00
14	**AG0049903R**	19,90
15	**AG0050003R**	10,50
16	**AG0050207R**	4,91
17	**A525004700**	7,44
18	**A525010900**	6,24
19	**AG0085400R**	8,41
20	**AG0050507R**	51,40

		€
21	**AG0002500R**	15,60
22	**A525084600**	55,30
23	**A525006600**	7,44
24	**A525084000**	60,50
25	**AG0067600R**	60,90
26	**AG0027000R**	60,90
27	**A525084400**	134,00
28	**A525084200**	60,50
29	**AG0005300R**	11,40

		€
30	**A525087300**	18,90
31	**A525005507**	7,44
32	**A525007700**	8,75
33	**A525007800**	11,10
34	**A525009800**	27,10
35	**AG0036800R**	3,71
36	**AG0050603R**	3,88
37	**AG0029400R**	2,74
38	**AG0050700R**	7,73

		€
39	**A525096700**	9,53
40	**AG0050800R**	16,10
41	**AG0050903R**	6,05
42	**AG0051003R**	72,30

Brava

Llaves de paso de 1/2”
Build in 1/2” valve

A5A1530
A5A0530

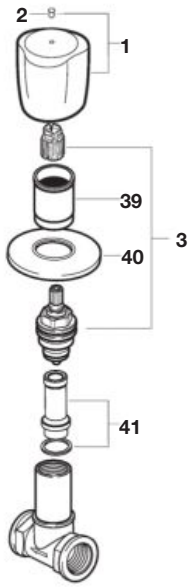

Llaves de paso de 3/4”
Build in 3/4” valve

A5A1630
A5A0630

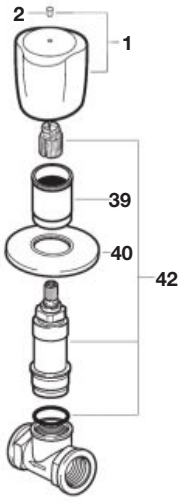

Llaves de paso para soldar
Build-in valve for welding

5A1330
5A2330
5A1830
5A0830
5A1930
5A0930

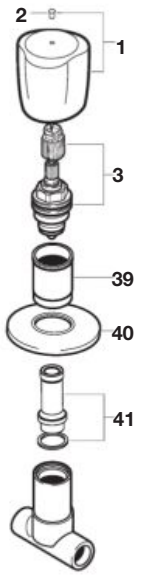

Grifería de pared y llave de paso
Build-in valve faucet

A5A7830
A5A7930

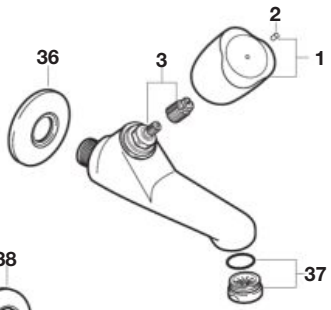

A5A8030

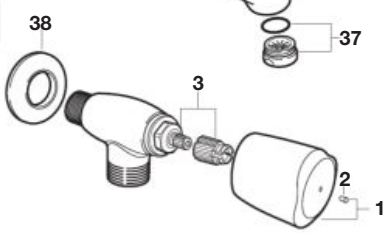

		€
1	**AG0025700R**	8,67
2	**AG0058307R**	2,68
3	**AG0018208R**	12,70
4	**AG0045903R**	10,30
5	**AG0046000R**	6,14
6	**A525020309**	15,00
7	**A525021200**	31,20
8	**AG0055800R**	14,40
9	**A525004700**	7,44

		€
10	**A525004600**	8,20
11	**AG0049803R**	12,00
14	**AG0049903R**	19,90
15	**AG0050003R**	10,50
16	**AG0050207R**	4,91
17	**A525004700**	7,44
18	**A525010900**	6,24
19	**AG0085400R**	8,41
20	**AG0050507R**	51,40

		€
21	**AG0002500R**	15,60
22	**A525084600**	55,30
23	**A525006600**	7,44
24	**A525084000**	60,50
25	**AG0067600R**	60,90
26	**AG0027000R**	60,90
27	**A525084400**	134,00
28	**A525084200**	60,50
29	**AG0005300R**	11,40

		€
30	**A525087300**	18,90
31	**A525005507**	7,44
32	**A525007700**	8,75
33	**A525007800**	11,10
34	**A525009800**	27,10
35	**AG0036800R**	3,71
36	**AG0050603R**	3,88
37	**AG0029400R**	2,74
38	**AG0050700R**	7,73

		€
39	**A525096700**	9,53
40	**AG0050800R**	16,10
41	**AG0050903R**	6,05
42	**AG0051003R**	72,30

Hide & Seat

Rociador / Shower head

A5B9950C00

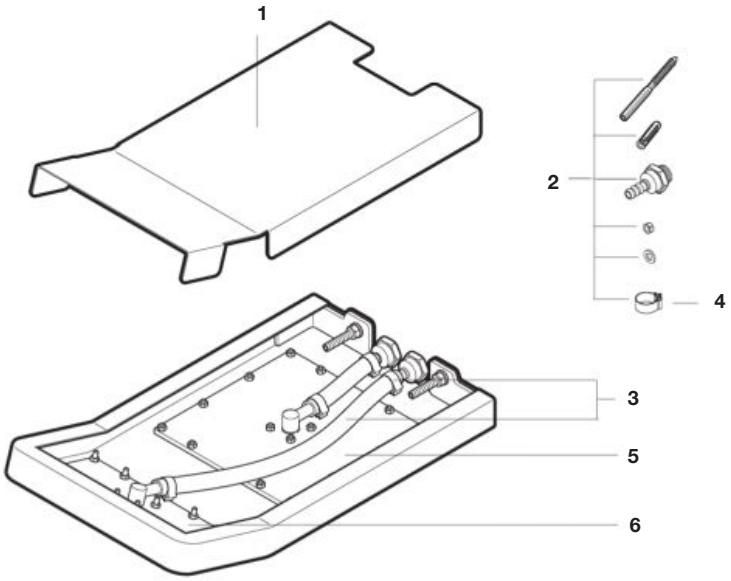

		€			€			€
1	**AG0081700R**	46,70	3	**AE0009200R**	5,07	5	**AD0002100R**	490,00
2	**AG0081600R**	27,80	4	**A2R0179000**	7,24	6	**AG0081800R**	192,00

Frontalis

Grifería para lavabo y bidé / Basin and bidet faucet

A5A3557

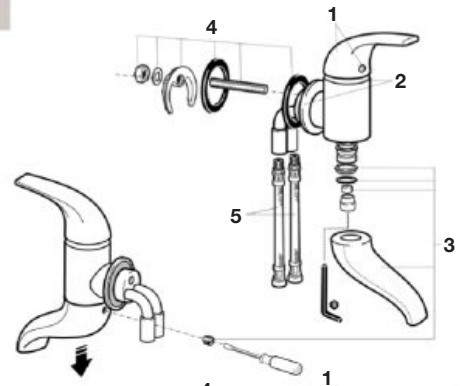

A5A6457

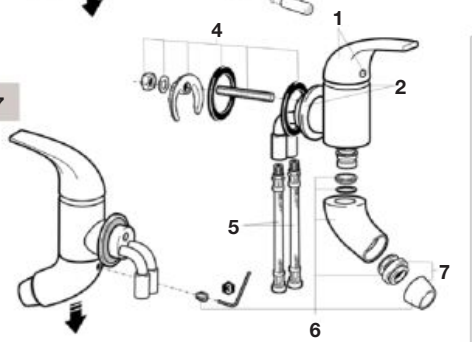

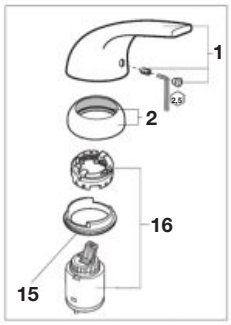

Grifería mural para lavabo y baño
Basin & bath mural faucet

A5A4557

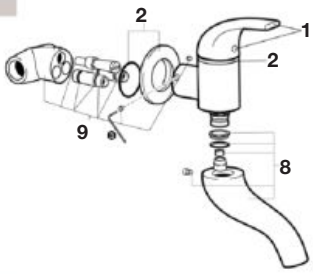

A5A1057

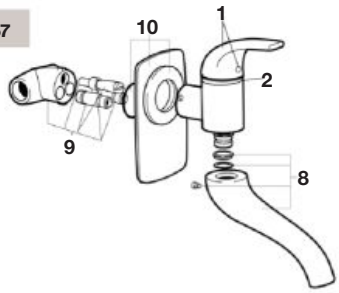

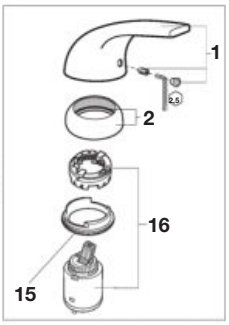

Grifería empotrable para baño y ducha
Wall-mounted bath and shower faucet

A5A0657

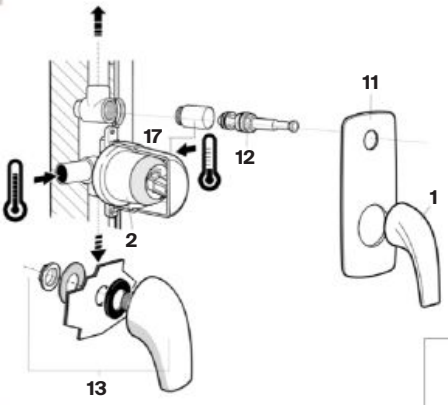

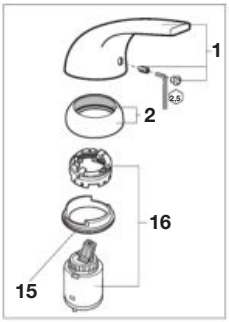

A5A2257

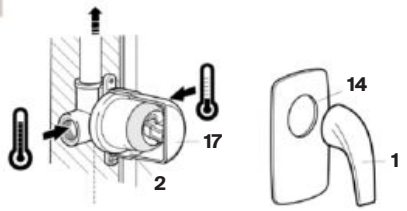

		€
1	**A525027400**	84,60
2	**A525027500**	111,00
3	**A525028400**	104,00
4	**A525028803**	N.D.

		€
5	**A525027609**	24,20
6	**A525028600**	202,00
7	**A525009200**	23,30
8	**A525028500**	126,00

		€
9	**A525028703**	99,40
10	**A525027700**	164,00
11	**A525028200**	167,00
12	**A525006500**	23,30

		€
13	**A526319800**	N.D.
14	**A525028300**	105,00
15	**A525027803**	32,40
16	**AG0053707R**	39,20

		€
17	**A525029407**	2,94

Singles Open

Grifería para lavabo / Basin faucet

A5A3010C00

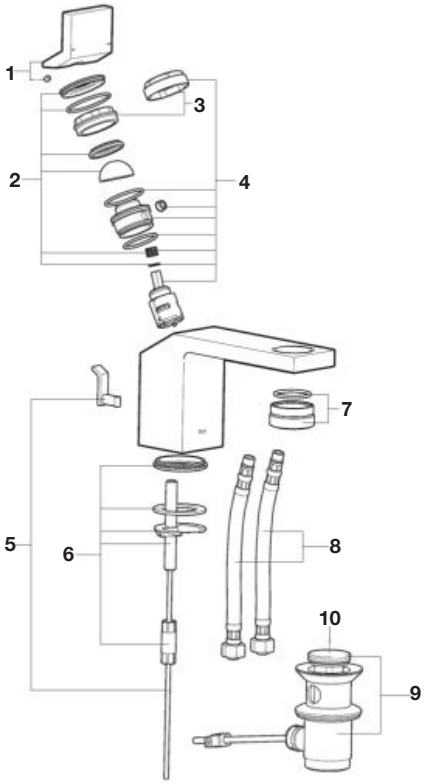

Grifería para lavabo / Basin faucet

A5A3410C00

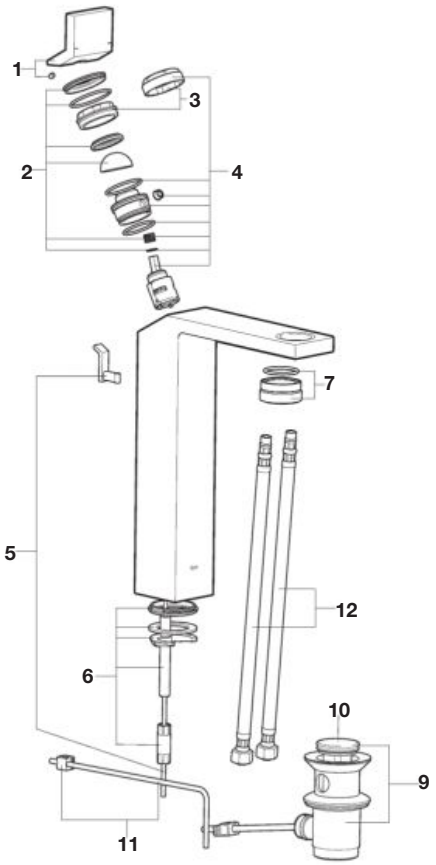

		€
1	**AG0090300R**	46,50
2	**AG0090400R**	N.D.
3	**AG0090503R**	89,40

		€
4	**AG0090603R**	144,00
5	**AG0090700R**	12,90
6	**AG0090803R**	13,80

		€
7	**AG0090900R**	122,00
8	**AG0035509R**	19,90
9	**AG0075400R**	33,80

		€
10	**AG0096200R**	7,48
11	**AG0033300R**	30,00
12	**AG0100409R**	19,90

Urban

Grifería para lavabo / Basin faucet

A5A3404

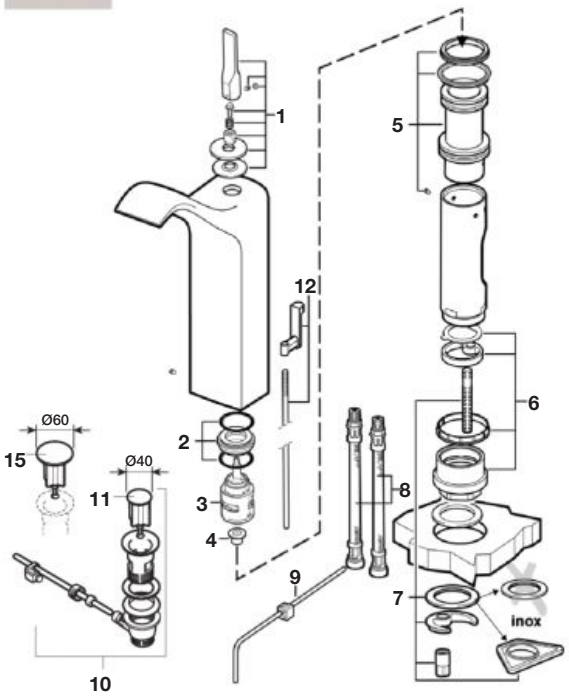

Grifería para lavabo / Basin faucet

A5A3004

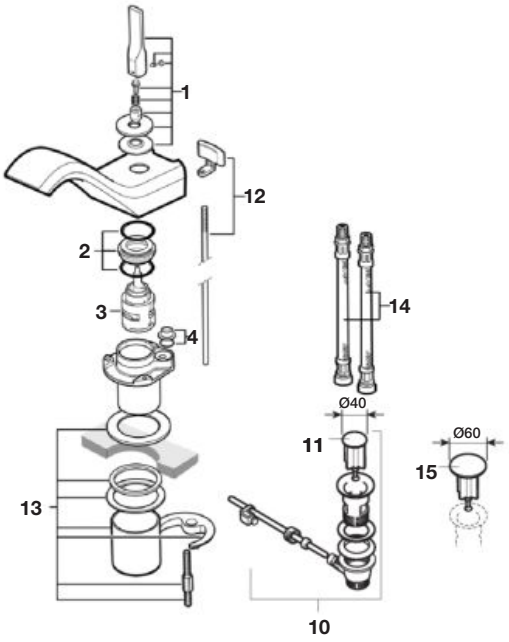

		€
1	**AG0040400R**	149,00
2	**AG0040503R**	10,40
3	**AG0008503R**	58,80

		€
4	**AG0040607R**	9,29
5	**AG0040703R**	71,70
6	**AG0040803R**	60,60

		€
7	**AG0040903R**	18,00
8	**A525020409**	18,60
9	**AG0033300R**	30,00

		€
10	**AG0075300R**	28,80
11	**AG0096200R**	7,48
12	**A525023000**	12,50

		€
13	**AG0041003R**	43,30
14	**AG0009209R**	17,70
15	**AG0055800R**	14,40

Esmai

Grifería para lavabo y bidé / Basin and bidet faucet

A5A3031
A5A3131

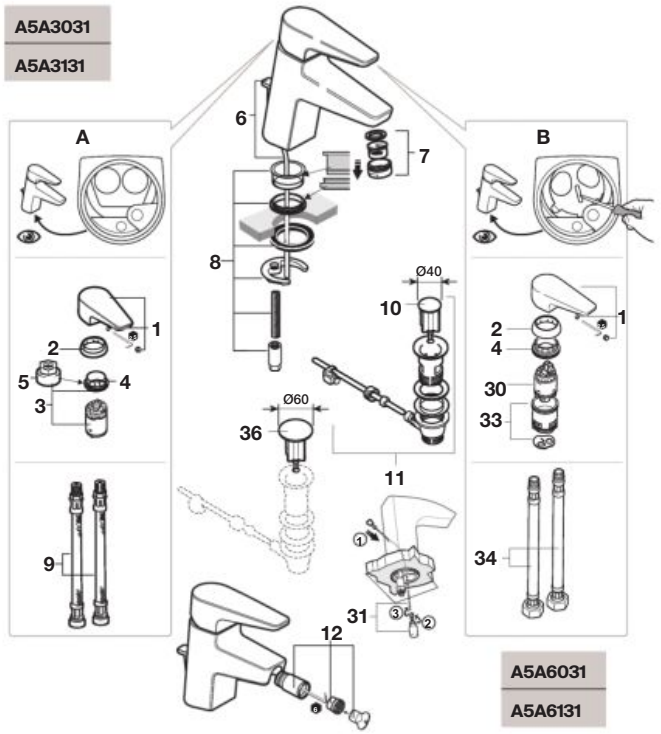

A5A6031
A5A6131

Grifería de caño alto para lavabo
Extended height basin faucet

A5A3431

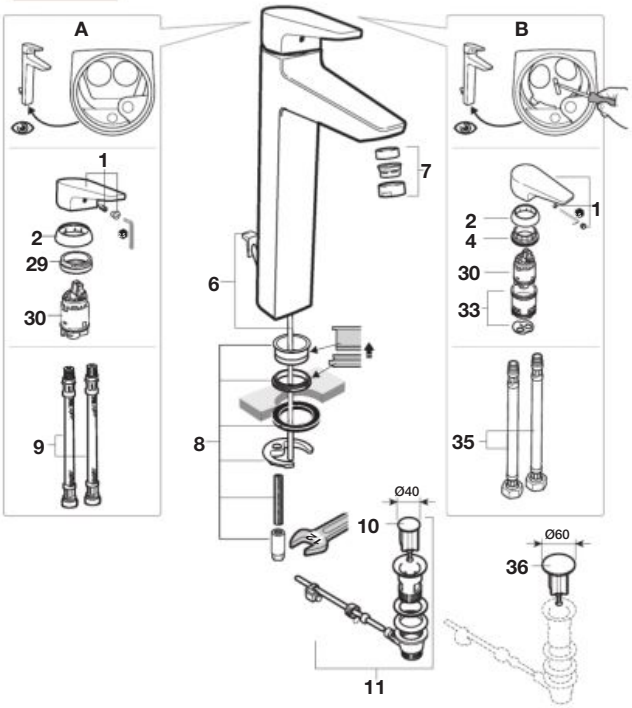

Grifería para baño y ducha / Bath and shower faucet

A5A0131

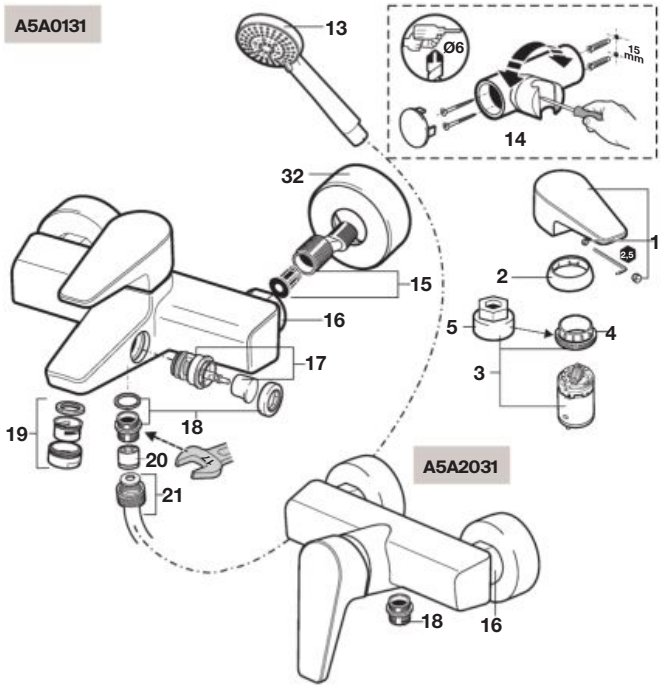

A5A2031

Grifería empotrable para baño y ducha
Wall-mounted bath and shower faucet

A5A2231

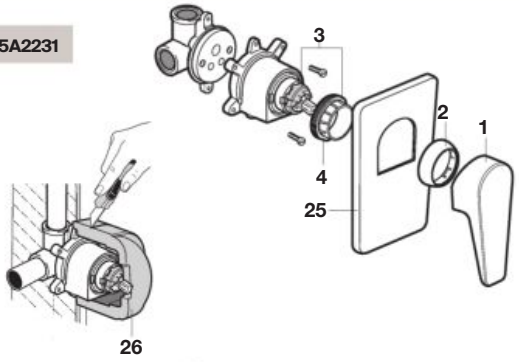

A5A0631

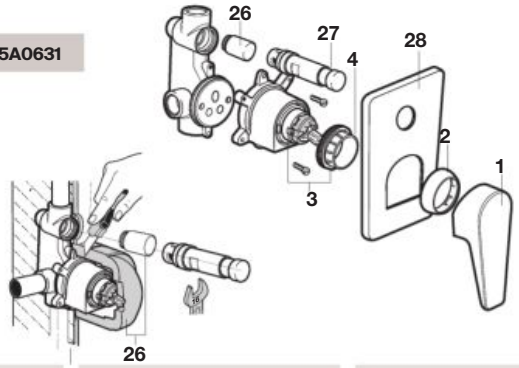

		€
1	**A525029600**	22,60
2	**AG0085300R**	18,00
3	**AG0053707R**	39,20
4	**A525023507**	4,23
5	**A525005407**	7,44
6	**A525020600**	8,88
7	**A525002900**	9,08
8	**A525004403**	7,92

		€
9	**A525020309**	15,00
10	**AG0096200R**	7,48
11	**AG0075300R**	28,80
12	**A525003507**	38,20
13	**A5B1103C00**	-
14	**AG0003700R**	13,70
15	**A525005308**	13,50
16	**A525026200**	34,90

		€
17	**A525023600**	35,50
18	**A525024200**	9,74
19	**A525003600**	4,85
20	**A525005507**	7,44
21	**A525009800**	27,10
23	**A525030303**	20,80
24	**A525020409**	18,60
25	**A525029900**	45,80

		€
26	**A525029207**	13,70
27	**A525022800**	85,90
28	**A525030000**	44,20
29	**A525027803**	32,40
30	**AG0141207R**	19,20
31	**A525004600**	8,20
32	**AG0087100R**	6,94
33	**AG0096307R**	6,45

		€
34	**AG0096409R**	13,90
35	**AG0096509R**	16,40
36	**AG0055800R**	14,40

Esmai

Grifería para cocina / Kitchen faucet

A5A8431

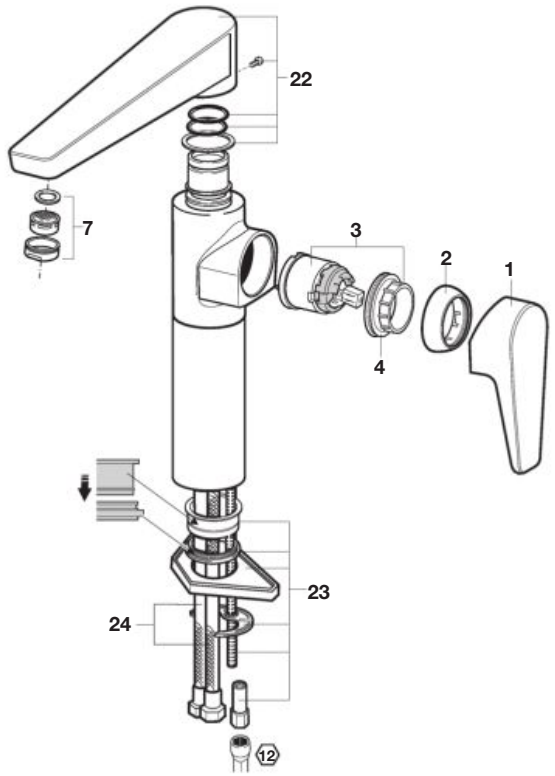

		€
1	**A525029600**	22,60
2	**AG0085300R**	18,00
3	**AG0053707R**	39,20
4	**A525023507**	4,23
5	**A525005407**	7,44
6	**A525020600**	8,88
7	**A525002900**	9,08
8	**A525004403**	7,92

		€
9	**A525020309**	15,00
10	**AG0096200R**	7,48
11	**AG0075300R**	28,80
12	**A525003507**	38,20
13	**A5B1103C00**	-
14	**AG0003700R**	13,70
15	**A525005308**	13,50
16	**A525026200**	34,90

		€
17	**A525023600**	35,50
18	**A525024200**	9,74
19	**A525003600**	4,85
20	**A525005507**	7,44
21	**A525009800**	27,10
22	**A525029700**	N.D.
23	**A525030303**	20,80
24	**A525020409**	18,60

		€
25	**A525029900**	45,80
26	**A525029207**	13,70
27	**A525022800**	85,90
28	**A525030000**	44,20
29	**A525027803**	32,40
30	**AG0141207R**	19,20
31	**A525004600**	8,20
32	**AG0087100R**	6,94

		€
33	**AG0096307R**	6,45
34	**AG0096409R**	13,90
35	**AG0096509R**	16,40
36	**AG0055800R**	14,40

Gante

Grifería para lavabo / Basin faucet

A5272333
A5261649

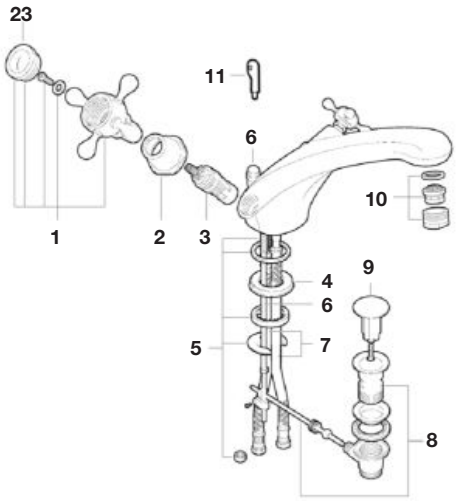

Grifería para bidé / Bidet faucet

A5275134
A5261652

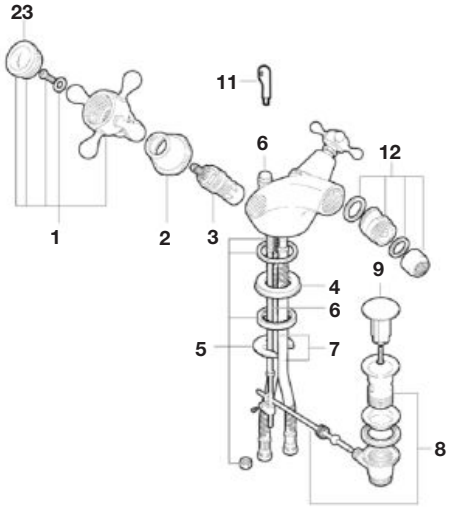

Grifería para baño y ducha / Bath and shower faucet

A5262325

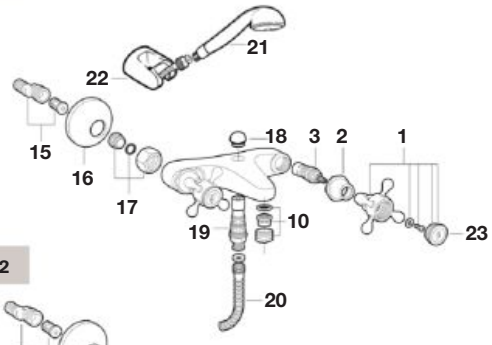

A5262322

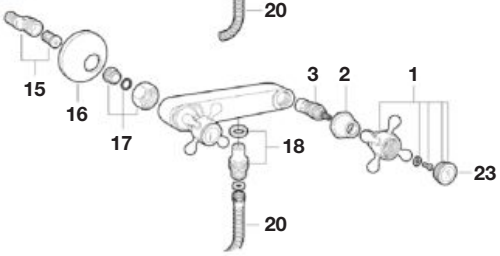

Grifería para cocina / Kitchen faucet

A5261685

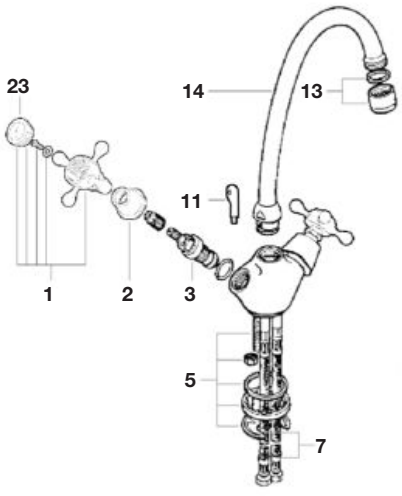

		€
1	**AG0017500R**	47,00
2	**AG0047400R**	14,40
3	**A525092709**	73,20
4	**AG0005900R**	40,60
5	**AG0045903R**	10,30

		€
6	**AG0046000R**	6,14
7	**A525020309**	15,00
8	**A525021200**	31,20
9	**AG0055800R**	14,40
10	**A525002900**	9,08

		€
11	**A525004600**	8,20
12	**A525010900**	6,24
13	**A525006600**	7,44
14	**A525084200**	60,50
15	**A525005308**	13,50

		€
16	**A525015300**	5,83
17	**AG0047700R**	22,40
18	**AG0005300R**	11,40
19	**A525087300**	18,90
20	**A525009800**	27,10

		€
21	**A5B9035C00**	N.D.
22	**A526703910**	25,90
23	**AG0090200R**	10,90

T-5000 (Panama)

Grifería termostática para baño y ducha
Bath & shower thermostatic faucet

A5A1108

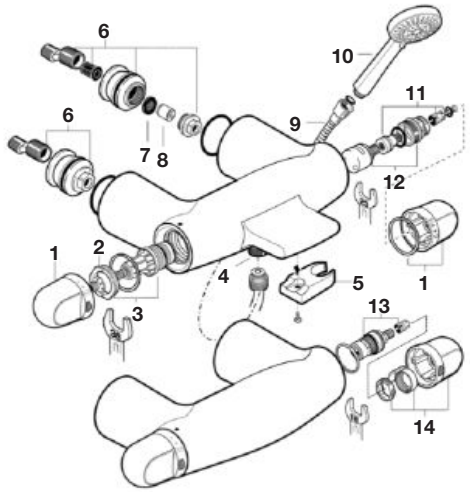

Grifería termostática empotrable para baño y ducha
Wall-mounted bath or shower thermostatic faucet

A5A2208
A5A2808

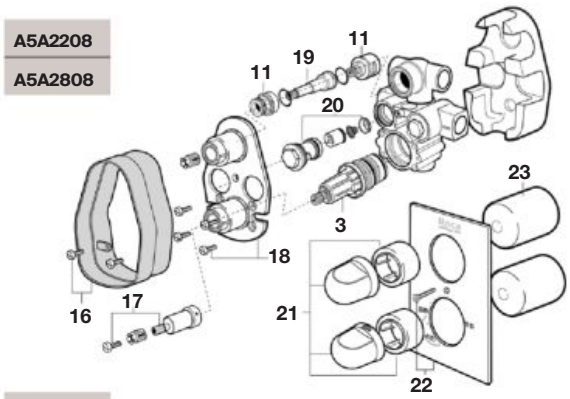

A5A2308
A5A2908

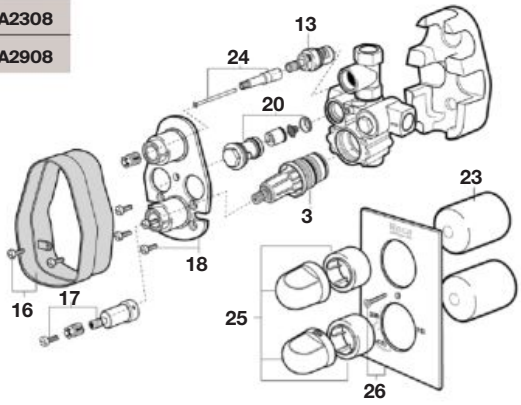

		€
1	**AG0027400R**	84,40
2	**AG0020703R**	22,60
3	**A525028003**	81,70
4	**A525024200**	9,74
5	**AG0029100R**	6,59
6	**AG0029203R**	109,00

		€
7	**A525016207**	2,56
8	**AG0026307R**	5,83
9	**A525009800**	27,10
10	**A5B8113C00**	-
11	**A525012503**	33,20
12	**A525012403**	18,00

		€
13	**A525092709**	73,20
14	**AG0027500R**	84,60
16	**AG0029007R**	2,74
17	**A525024703**	21,50
18	**AG0028907R**	3,80
19	**AG0027903R**	27,90

		€
20	**A525018003**	87,70
21	**AG0027600R**	84,60
22	**AG0027800R**	223,00
23	**AG0027707R**	5,89
24	**AG0023903R**	42,10
25	**AG0028000R**	87,40

		€
26	**AG0028100R**	259,00

Amura

Grifería para lavabo y bidé / Basin and bidet faucet

A5272346
A5261710

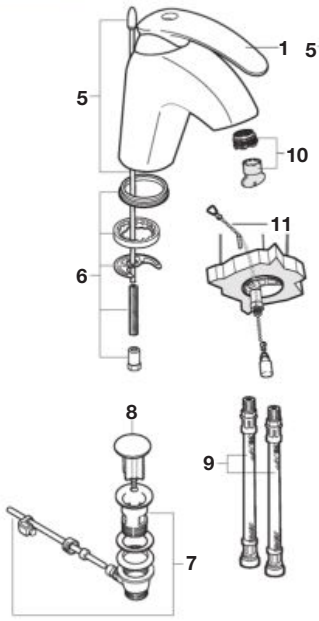

A5275145
A5261711

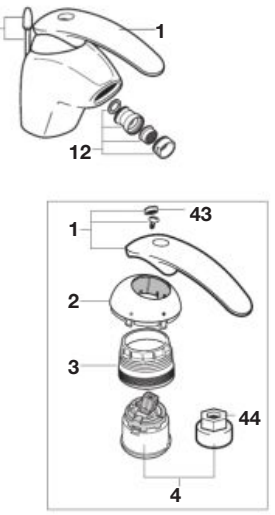

Grifería para lavabo con caño extraíble
Removable spout basin faucet

A5272349

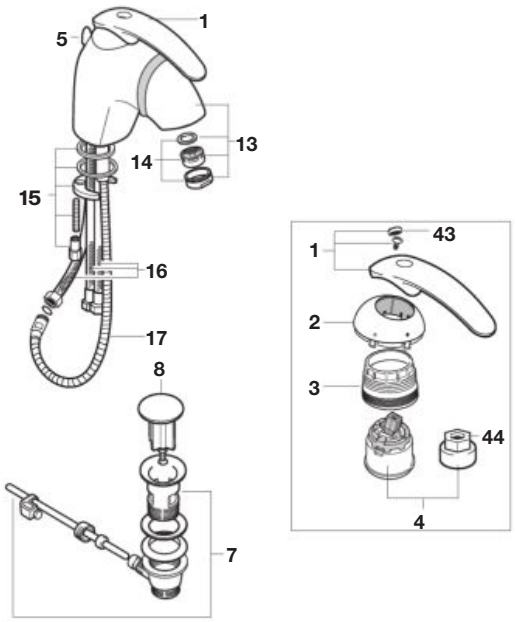

		€
1	**AG0078900R**	51,80
2	**AG0079000R**	5,50
3	**A525023507**	4,23
4	**A525081303**	49,90
5	**AG0003600R**	7,61
6	**AG0002603R**	9,94
7	**A525021200**	31,20
8	**AG0055800R**	14,40
9	**A525020309**	15,00

		€
10	**A525010007**	10,30
11	**A525004600**	8,20
12	**A525009200**	23,30
13	**AG0080000R**	18,60
14	**A525002900**	9,08
15	**AG0079903R**	13,20
16	**A525027609**	24,20
17	**AG0080100R**	47,40
18	**AG0056400R**	119,00

		€
19	**A525005507**	7,44
20	**AG0000300R**	123,00
21	**AG0000503R**	19,90
22	**AG0055700R**	50,30
23	**AG0000703R**	12,00
24	**A525083900**	97,20
25	**AG0000403R**	34,70
26	**AG0079600R**	116,00
27	**AG0079700R**	24,40

		€
28	**A525005308**	13,50
29	**AG0002500R**	15,60
30	**AG0079800R**	12,00
31	**A525080509**	18,40
32	**A525003600**	4,85
33	**A5B1131C00**	-
34	**A525009800**	27,10
35	**A526703910**	25,90
36	**AG0080200R**	15,50

		€
37	**AG0005400R**	55,90
38	**A525006500**	23,30
39	**AG0080300R**	42,10
40	**A525026703**	33,60
41	**AG0080403R**	16,50
42	**AG0004100R**	63,90
43	**AG0087200R**	7,21
44	**A525005407**	7,44
45	**AG0110100R**	16,80

Amura

Grifería para baño y ducha / Bath and shower faucet

A5262452

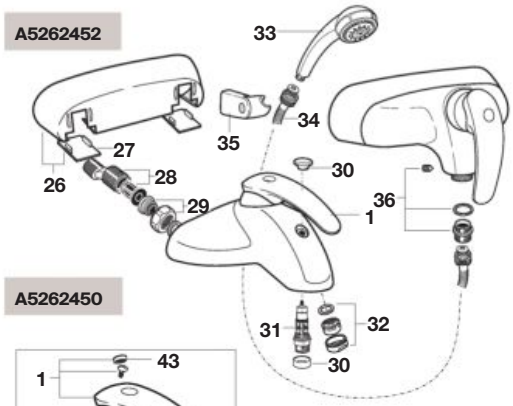

A5262450

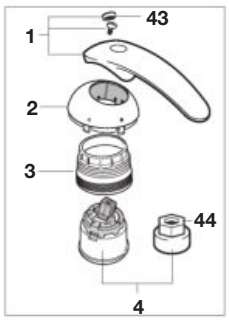

Grifería empotrable para baño y ducha
Wall-mounted bath and shower faucet

A5262455

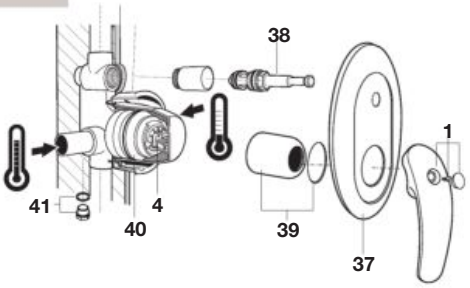

A5262456

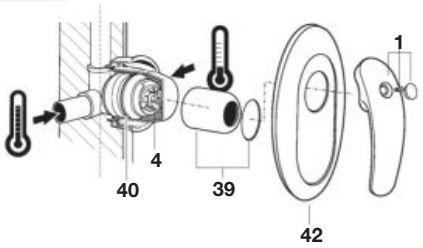

Grifería para cocina / Kitchen faucet

A5261715

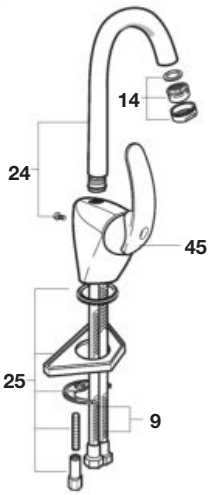

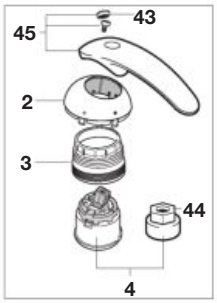

Grifería para cocina / Kitchen faucet

A5261723

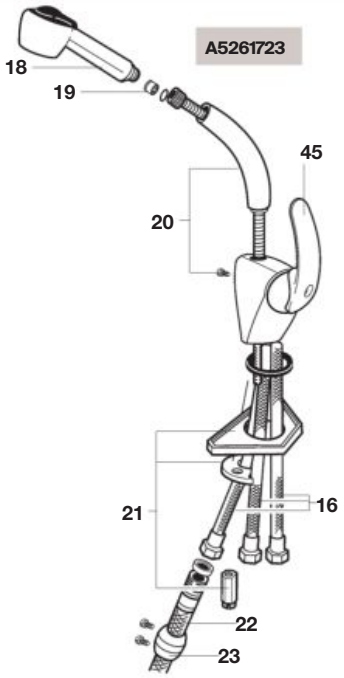

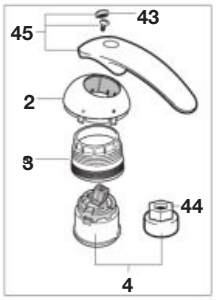

		€
1	**AG0078900R**	51,80
2	**AG0079000R**	5,50
3	**A525023507**	4,23
4	**A525081303**	49,90
5	**AG0003600R**	7,61
6	**AG0002603R**	9,94
7	**A525021200**	31,20
8	**AG0055800R**	14,40
9	**A525020309**	15,00

		€
10	**A525010007**	10,30
11	**A525004600**	8,20
12	**A525009200**	23,30
13	**AG0080000R**	18,60
14	**A525002900**	9,08
15	**AG0079903R**	13,20
16	**A525027609**	24,20
17	**AG0080100R**	47,40
18	**AG0056400R**	119,00

		€
19	**A525005507**	7,44
20	**AG0000300R**	123,00
21	**AG0000503R**	19,90
22	**AG0055700R**	50,30
23	**AG0000703R**	12,00
24	**A525083900**	97,20
25	**AG0000403R**	34,70
26	**AG0079600R**	116,00
27	**AG0079700R**	24,40

		€
28	**A525005308**	13,50
29	**AG0002500R**	15,60
30	**AG0079800R**	12,00
31	**A525080509**	18,40
32	**A525003600**	4,85
33	**A5B1131C00**	-
34	**A525009800**	27,10
35	**A526703910**	25,90
36	**AG0080200R**	15,50

		€
37	**AG0005400R**	55,90
38	**A525006500**	23,30
39	**AG0080300R**	42,10
40	**A525026703**	33,60
41	**AG0080403R**	16,50
42	**AG0004100R**	63,90
43	**AG0087200R**	7,21
44	**A525005407**	7,44
45	**AG0110100R**	16,80

Touch

Grifería para lavabo y bidé / Basin and bidet faucet

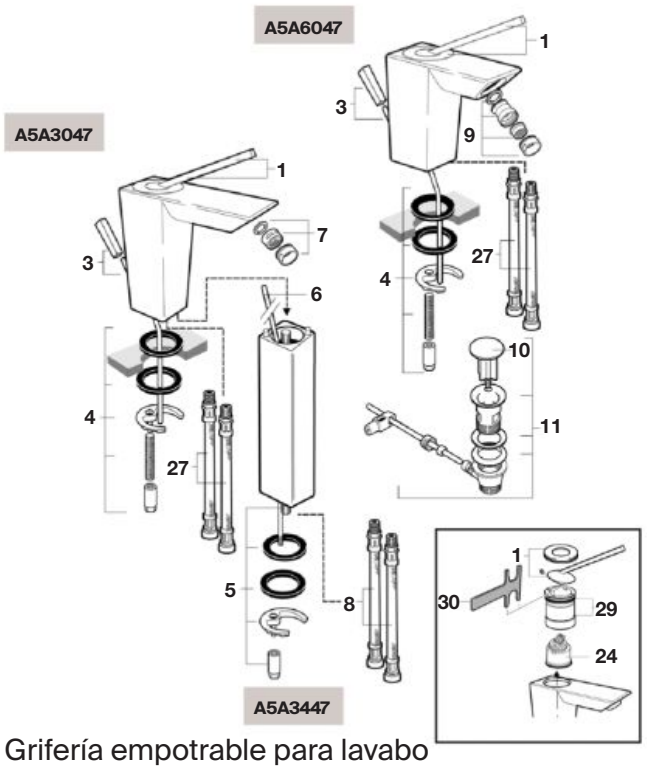

Grifería bimando para lavabo / Twin-lever basin faucet

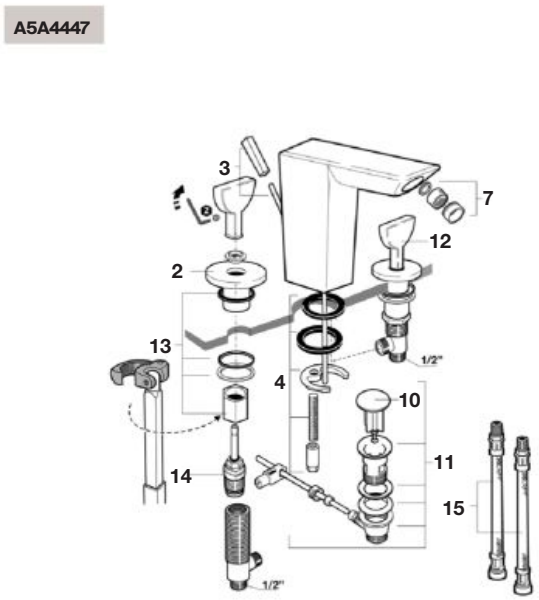

Grifería empotrable para lavabo
Wall-mounted basin faucet

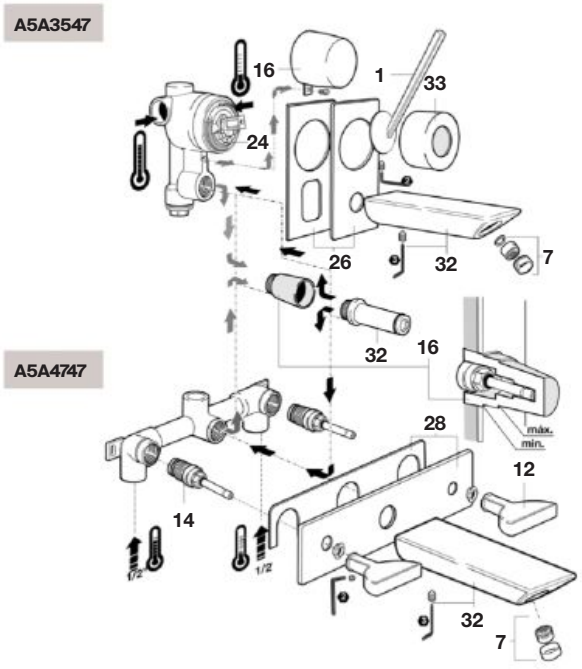

Grifería para baño y ducha / Bath and shower faucet

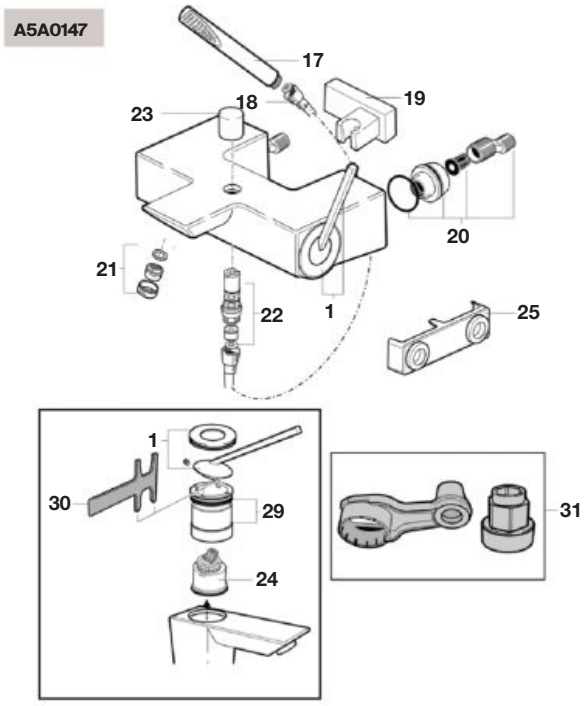

		€
1	**A525840700**	66,40
2	**AG0024900R**	66,40
3	**A525768000**	14,50
4	**A525020003**	9,39
5	**A525020203**	19,40
6	**A525768300**	N.D.
7	**A525002900**	9,08

		€
8	**A525020409**	18,60
9	**A525009300**	19,90
10	**AG0055800R**	14,40
11	**A525021200**	31,20
12	**A525021300**	86,80
13	**A525021503**	33,60
14	**A525021403**	48,00

		€
15	**A525020509**	13,20
17	**A5B9047C00**	-
18	**A525009800**	27,10
19	**A525021600**	32,70
20	**A525021703**	112,00
21	**A525003600**	4,85
22	**A525087300**	18,90

		€
23	**A525023200**	11,90
24	**A525081303**	49,90
25	**A525021907**	3,29
26	**A525022000**	76,90
27	**A525020309**	15,00
28	**A525022200**	137,00
29	**A525022403**	31,20

		€
30	**A525022503**	46,50
31	**A525005407**	7,44
32	**A525022300**	202,00
33	**AG0025000R**	29,70

Touch

Grifería termostática para baño y ducha
Bath & shower thermostatic faucet

A5A1147

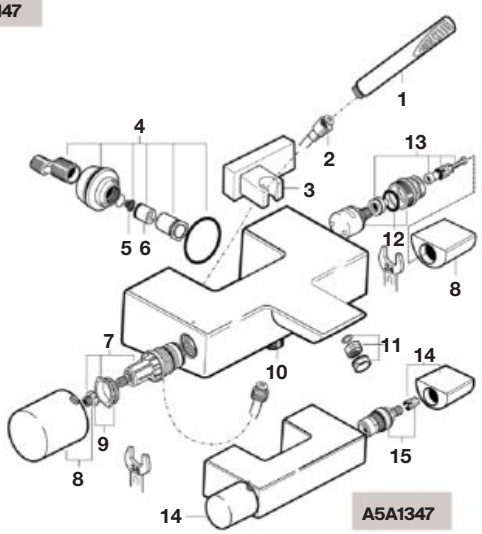

Grifería termostática empotrable para baño y ducha
Wall-mounted bath & shower thermostatic faucet

A5A2847

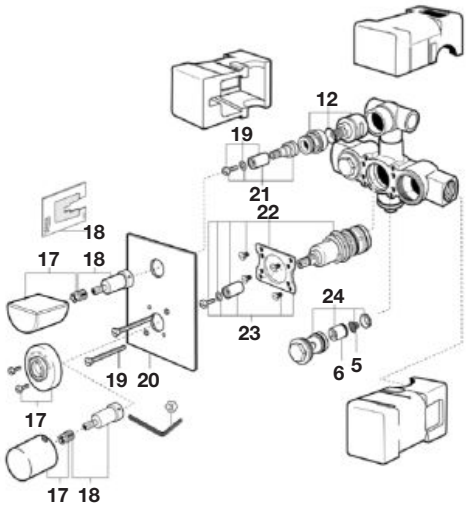

Grifería termostática empotrable para baño o ducha
Wall-mounted bath or shower thermostatic faucet

A5A2947

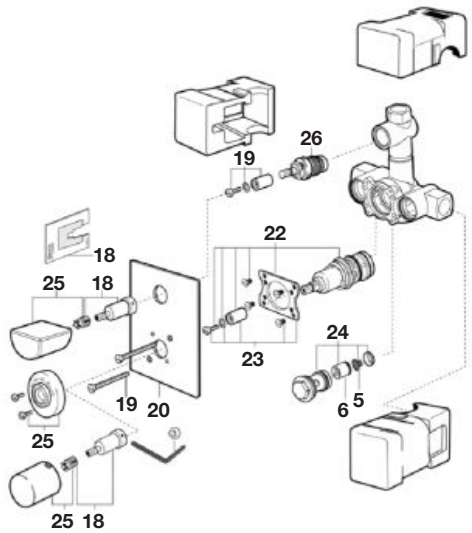

		€
1	**A5B9047C00**	-
2	**A525009800**	27,10
3	**A525021600**	32,70
4	**AG0026003R**	123,00
5	**AG0026403R**	1,68
6	**AG0026307R**	5,83

		€
7	**A525028003**	81,70
8	**AG0025100R**	97,70
9	**AG0020703R**	22,60
10	**AG0000800R**	27,90
11	**A525003600**	4,85
12	**AG0025300R**	57,30

		€
13	**AG0025403R**	26,80
14	**AG0025200R**	106,00
15	**A525092709**	73,20
16	**A525021907**	3,29
17	**AG0025500R**	N.D.
18	**A525024303**	16,50

		€
19	**AG0028703R**	16,40
20	**AG0026200R**	195,00
21	**AG0026103R**	44,20
22	**A525017303**	125,00
23	**AG0021103R**	18,30
24	**A525018003**	87,70

		€
25	**AG0025600R**	N.D.
26	**A525098108**	24,40

Monojet

Grifería para lavabo y bidé / Basin and bidet faucet

A5A3039
A5A3139

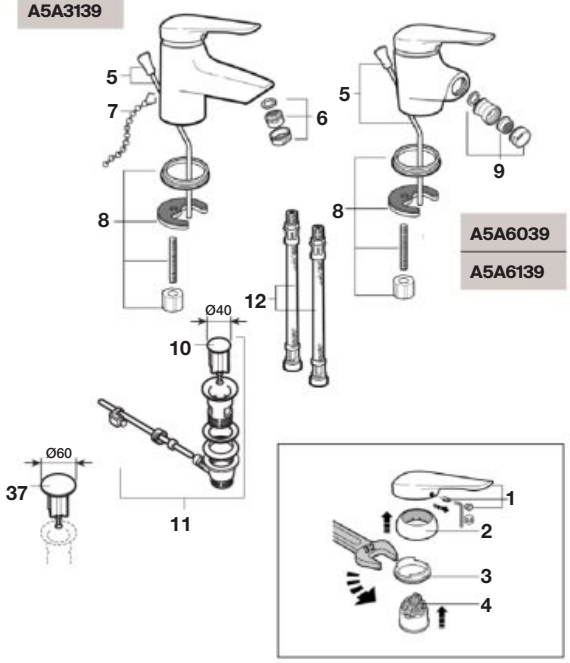

Grifería para baño y ducha / Bath and shower faucet

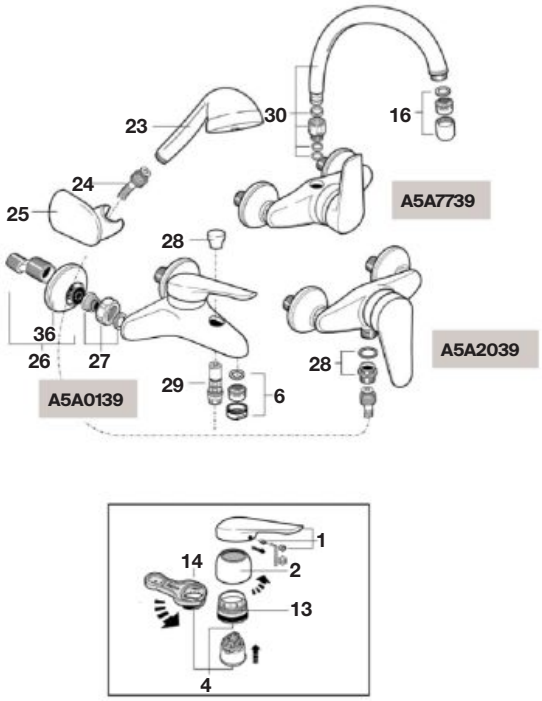

Grifería empotrable para baño y ducha
Wall-mounted bath and shower faucet

A5A0639

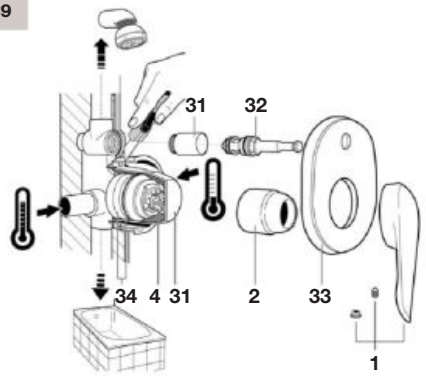

A5A2239

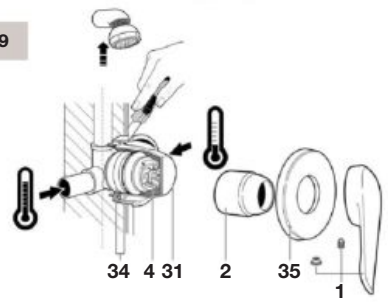

Grifería para cocina / Kitchen faucet

A5A8439

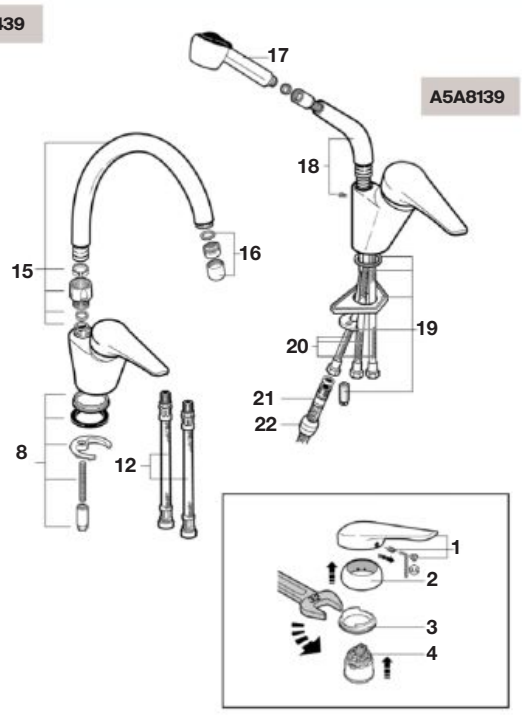

		€
1	**A525082600**	44,80
2	**AG0009400R**	56,70
3	**A525026503**	11,90
4	**A525081303**	49,90
5	**AG0002100R**	8,45
6	**A525002900**	9,08
7	**A525004600**	8,20
8	**A525025303**	8,35

		€
9	**A525089100**	32,90
10	**AG0096200R**	7,48
11	**AG0075300R**	28,80
12	**A525020309**	15,00
13	**A525023507**	4,23
14	**A525005407**	7,44
15	**A525085200**	73,70
16	**A525006600**	7,44

		€
17	**AG005460BR**	60,20
18	**AG0002900R**	127,00
19	**AG0000503R**	19,90
20	**A525027609**	24,20
21	**AG0055700R**	50,30
22	**AG0000703R**	12,00
23	**A5B5039C00**	N.D.
24	**A525009800**	27,10

		€
25	**A526703910**	25,90
26	**A525005308**	13,50
27	**AG0002500R**	15,60
28	**AG0053600R**	7,00
29	**A525087300**	18,90
30	**A525084500**	69,10
31	**AG0003107R**	N.D.
32	**A525006500**	23,30

		€
33	**AG0005400R**	55,90
34	**A525026703**	33,60
35	**AG0005500R**	62,90
36	**A525015300**	5,83
37	**AG0055800R**	14,40

Vectra

Grifería para lavabo y bidé / Basin and bidet faucet

A5A3061
A5A3161

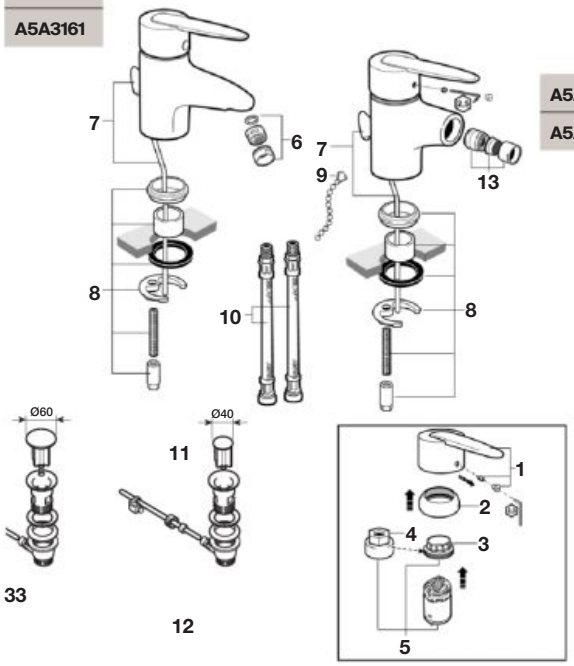

A5A6061
A5A6161

Grifería para baño y ducha / Bath and shower faucet

A5A0161

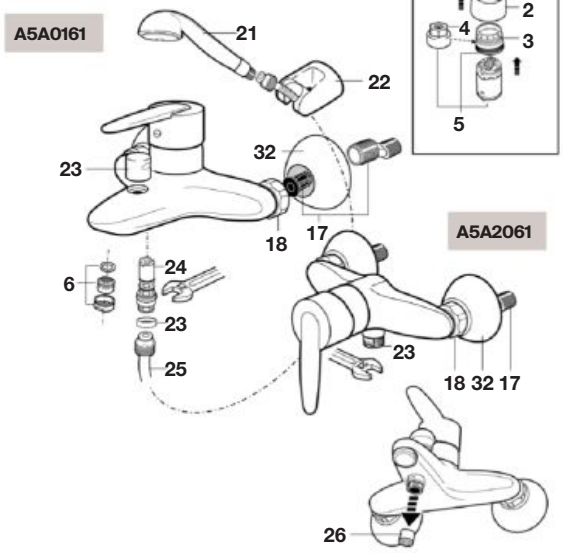

A5A2061

Grifería empotrable para baño y ducha
Wall-mounted bath and shower faucet

A5A0661

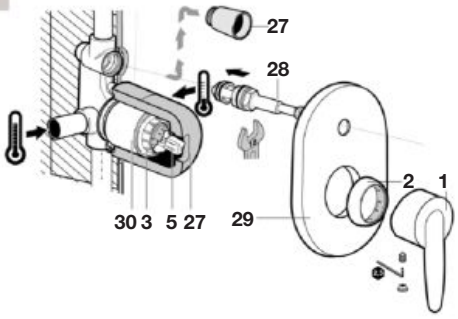

A5A2261

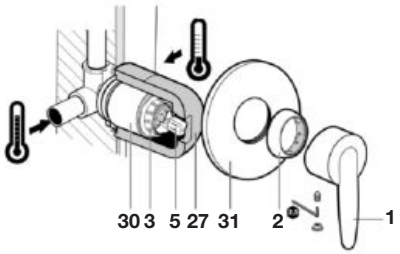

Grifería para cocina / Kitchen faucet

A5A7661

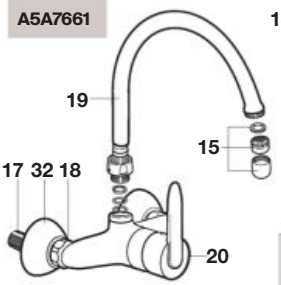

A5A8461

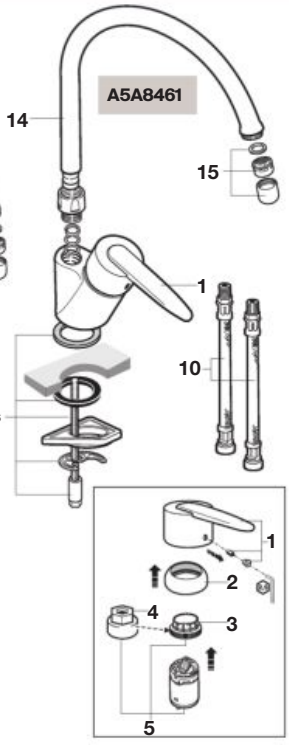

		€
1	AG0002000R	13,80
2	AG0085300R	18,00
3	A525023507	4,23
4	A525005407	7,44
5	AG0053707R	39,20
6	A525004700	7,44
7	AG0002100R	8,45

		€
8	A525004403	7,92
9	A525004600	8,20
10	A525020309	15,00
11	AG0096200R	7,48
12	AG0075300R	28,80
13	A525089100	32,90
14	AG0002200R	45,00

		€
15	A525006600	7,44
16	A525006903	8,56
17	A525005308	13,50
18	AG0002500R	15,60
19	AG0002400R	47,10
20	AG0002300R	13,30
21	A5B9035C00	N.D.

		€
22	A525007800	11,10
23	A525023200	11,90
24	A525087300	18,90
25	A525009800	27,10
26	A525005507	7,44
27	AG0001907R	11,00
28	A525006500	23,30

		€
29	A525002700	47,20
30	A525006800	20,50
31	A525002800	37,60
32	AG0085400R	8,41
33	AG0055800R	14,40

Betap

Grifería para lavabo / Basin faucet

A5A3044

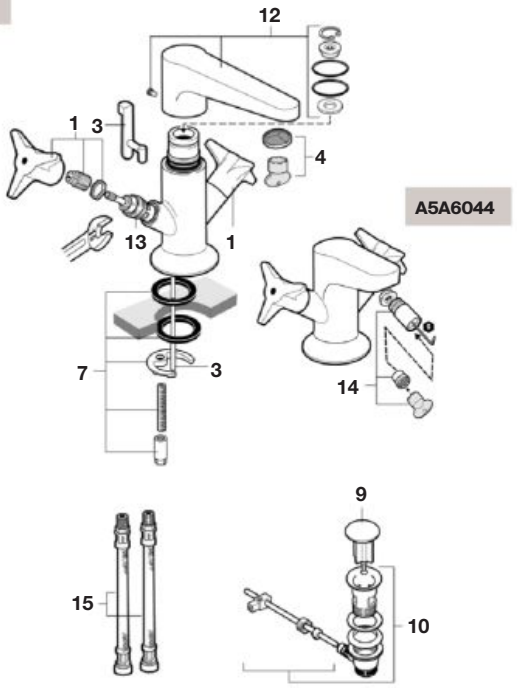

Grifería empotrada mural para lavabo
Wall-mounted basin faucet

A5A4744

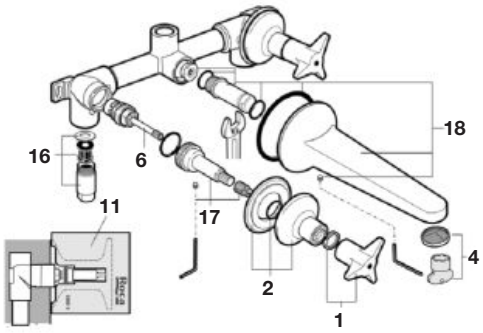

Grifería para lavab / Basin faucet

A5A4444

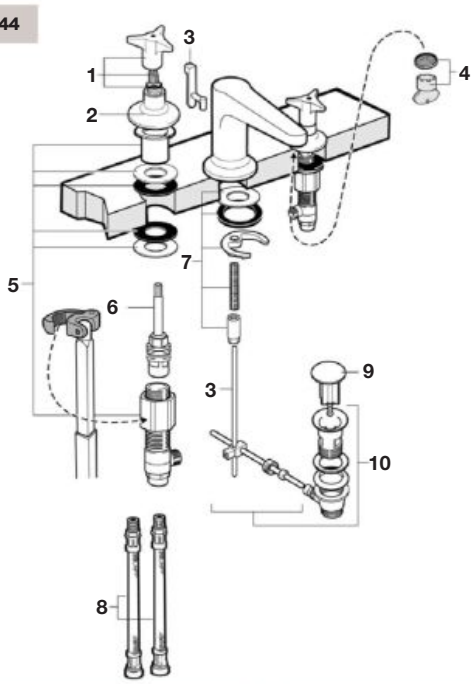

Grifería para baño y ducha / Bath and shower faucet

A5A0144

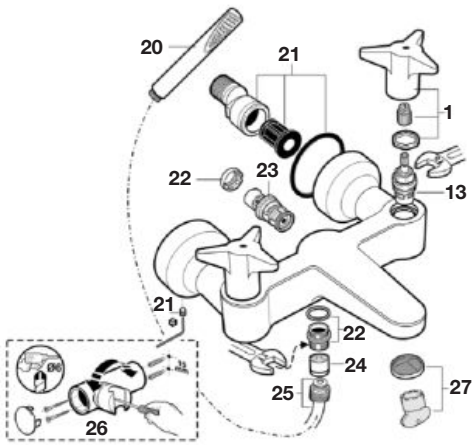

		€
1 2 un	**AG0006300R**	65,50
2	**AG0006100R**	39,10
3	**A525023000**	12,50
4	**A525003207**	5,74
5	**A525027903**	112,00
6	**A525021403**	48,00
7	**AG0006003R**	14,80
8	**A525020509**	13,20
9	**AG0055800R**	14,40

		€
10	**A525021200**	31,20
12	**AG0015800R**	N.D.
13	**AG0006403R**	32,10
14	**A525003507**	38,20
15	**A525020309**	15,00
16	**A525024803**	38,30
17	**AG0006803R**	57,30
18	**AG0006600R**	292,00
20	**A5B9047C00**	-

		€
21	**AG0009603R**	77,00
22	**A525024200**	9,74
23	**A525023600**	35,50
24	**A525005507**	7,44
25	**A525009800**	27,10
26	**AG0068500R**	27,30
27	**A525003307**	7,92
28	**A525005407**	7,44
29	**AG0009900R**	7,20

		€
30	**AG0006903R**	161,00
31	**AG0055700R**	50,30
32	**A525006903**	8,56
33	**AG0009709R**	9,39
34	**A525008009**	17,60

Betap

Grifería para ducha / Shower faucet

A5A2044

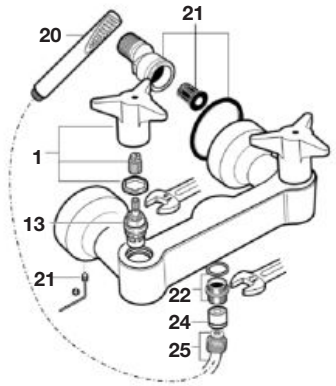

Grifería para baño y ducha / Bath and shower faucet

A5A0944

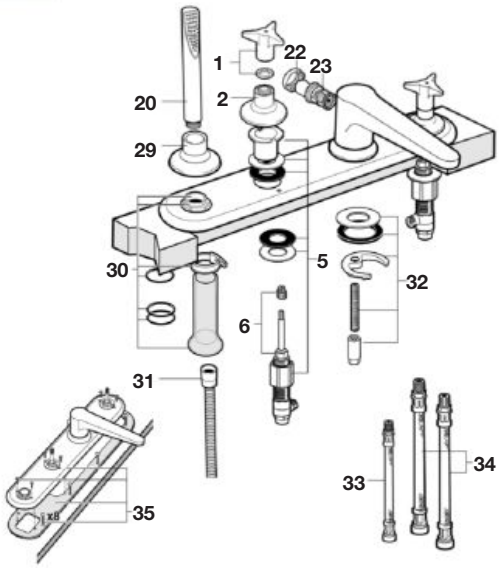

		€
1	**AG0006300R**	65,50
2	**AG0006100R**	39,10
3	**A525023000**	12,50
4	**A525003207**	5,74
5	**A525027903**	112,00
6	**A525021403**	48,00
7	**AG0006003R**	14,80

		€
8	**A525020509**	13,20
9	**AG0055800R**	14,40
10	**A525021200**	31,20
13	**AG0006403R**	32,10
14	**A525003507**	38,20
15	**A525020309**	15,00
16	**A525024803**	38,30

		€
17	**AG0006803R**	57,30
18	**AG0006600R**	292,00
20	**A5B9047C00**	-
21	**AG0009603R**	77,00
22	**A525024200**	9,74
23	**A525023600**	35,50
24	**A525005507**	7,44

		€
25	**A525009800**	27,10
26	**AG0068500R**	27,30
27	**A525003307**	7,92
28	**A525005407**	7,44
29	**AG0009900R**	7,20
30	**AG0006903R**	161,00
31	**AG0055700R**	50,30

		€
32	**A525006903**	8,56
33	**AG0009709R**	9,39
34	**A525008009**	17,60
35	**AG0009800R**	N.D.

Loft Elite

Grifería para lavabo y bidé / Basin and bidet faucet

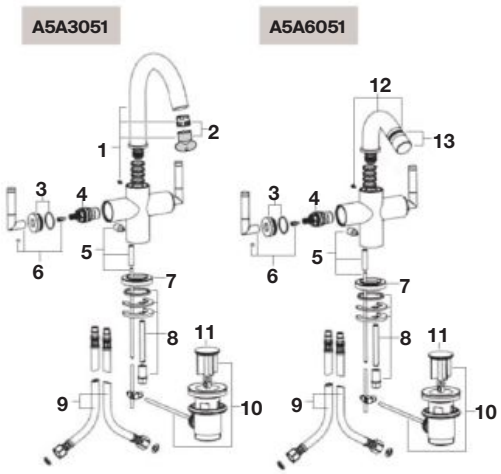

Grifería para lavabo / Basin faucet

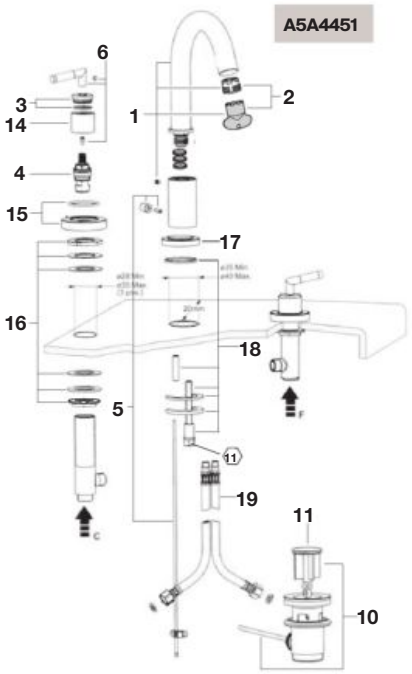

Grifería empotrable mural para lavabo
Wall-mounted basin faucet

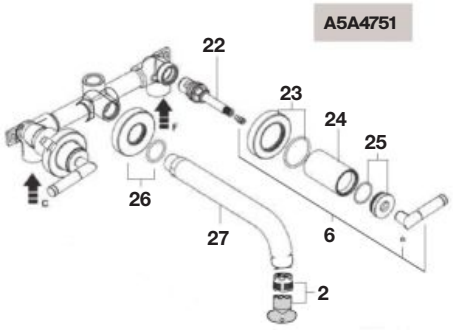

Antes 2007 / Before 2007

		€
1	AG0074300R	298,00
2	A525003907	22,70
3	AG0061500R	41,70
4	AG0020903R	51,50
5	AG0065300R	17,20
6	AG0074100R	99,20
7	AG0065500R	16,30
8	AG0078403R	7,88
9	AG0061409R	31,90

		€
10	AG0004700R	60,30
11	AG0067700R	18,30
12	AG0074500R	243,00
13	AG0017900R	13,20
14	AG0062900R	35,10
15	AG0062800R	52,80
16	AG0062100R	89,90
17	AG0065500R	16,30
18	AG0074603R	20,70

		€
19	AG0061409R	31,90
21	A525003907	22,70
22	AG0075603R	72,30
23	AG0062800R	52,80
24	AG0065700R	45,10
25	AG0061500R	41,70
26	AG0065100R	35,90
27	AG0064700R	168,00
28	AG0063400R	25,80

		€
29	AG0063200R	25,60
30	AG0063100R	8,36
32	AG0063300R	53,80
33	AG0078600R	27,00
34	AG0067000R	58,50
35	A505319400	-
36	A5B2015C00	-
37	AG0064900R	258,00
38	AG0076000R	53,50

		€
39	AG0076103R	38,90
40	AG0076200R	62,10
41	AG0064200R	33,30
42	AG0064109R	38,10

Después 2007 / After 2007

		€
1	AG0061700R	69,90
2	A525003907	22,70
3	AG0061500R	41,70
4	AG0020903R	51,50
5	AG0061300R	15,90
6	AG0074200R	99,20
7	AG0061200R	5,20
8	A525006903	8,56
9	AG0061409R	31,90

		€
10	A525021200	31,20
11	AG0067700R	18,30
12	AG0061100R	N.D.
13	AG0061000R	29,10
14	AG0062900R	35,10
15	AG0062800R	52,80
16	AG0062100R	89,90
17	AG0065500R	16,30
18	AG0078403R	7,88

		€
19	AG0062409R	37,20
20	AG0063000R	210,00
21	A525004007	16,70
22	AG0075603R	72,30
23	AG0065000R	63,10
24	AG0064500R	67,30
25	AG0078800R	27,90
26	AG0065100R	35,90
27	AG0074700R	101,00

		€
28	AG0063400R	25,80
29	AG0063200R	25,60
30	AG0063100R	8,36
31	AG0063600R	13,50
32	AG0131800R	45,80
33	A525003807	16,70
34	AG0068500R	27,30
35	A5B9047C00	-
36	A5B2015C00	-
37	AG0064900R	258,00
38	AG0064000R	53,80
39	AG0063903R	39,90
40	AG0076200R	62,10
41	AG0064200R	33,30
42	AG0064109R	38,10

Loft Elite

Grifería para baño y ducha / Bath and shower faucet

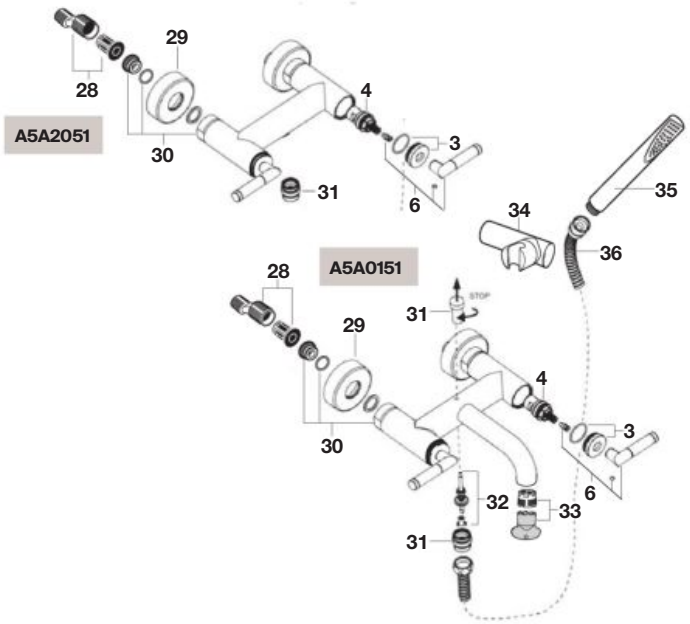

Grifería para baño y ducha / Bath and shower faucet

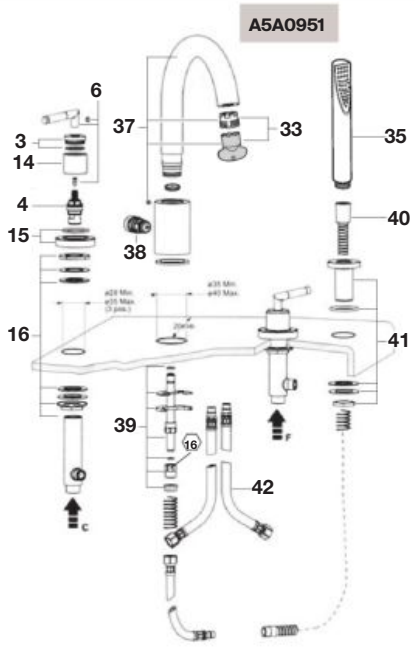

Grifería para cocina / Kitchen faucet

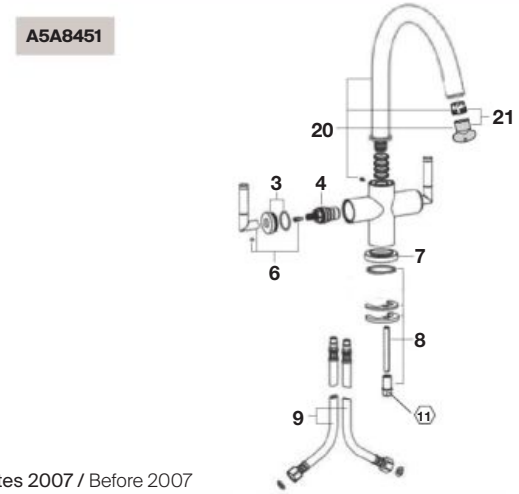

Antes 2007 / Before 2007

		€			€			€			€			€
1	AG0074300R	298,00	9	AG0061409R	31,90	17	AG0065500R	16,30	26	AG0065100R	35,90	35	A505319400	-
2	A525003907	22,70	10	AG0004700R	60,30	18	AG0074603R	20,70	27	AG0064700R	168,00	36	A5B2015C00	-
3	AG0061500R	41,70	11	AG0067700R	18,30	19	AG0061409R	31,90	28	AG0063400R	25,80	37	AG0064900R	258,00
4	AG0020903R	51,50	12	AG0074500R	243,00	21	A525003907	22,70	29	AG0063200R	25,60	38	AG0076000R	53,50
5	AG0065300R	17,20	13	AG0017900R	13,20	22	AG0075603R	72,30	30	AG0063100R	8,36	39	AG0076103R	38,90
6	AG0074100R	99,20	14	AG0062900R	35,10	23	AG0062800R	52,80	32	AG0063300R	53,80	40	AG0076200R	62,10
7	AG0065500R	16,30	15	AG0062800R	52,80	24	AG0065700R	45,10	33	AG0078600R	27,00	41	AG0064200R	33,30
8	AG0078403R	7,88	16	AG0062100R	89,90	25	AG0061500R	41,70	34	AG0067000R	58,50	42	AG0064109R	38,10

Después 2007 / After 2007

		€			€			€			€			€
1	AG0061700R	69,90	10	A525021200	31,20	19	AG0062409R	37,20	28	AG0063400R	25,80	37	AG0064900R	258,00
2	A525003907	22,70	11	AG0067700R	18,30	20	AG0063000R	210,00	29	AG0063200R	25,60	38	AG0064000R	53,80
3	AG0061500R	41,70	12	AG0061100R	N.D.	21	A525004007	16,70	30	AG0063100R	8,36	39	AG0063903R	39,90
4	AG0020903R	51,50	13	AG0061000R	29,10	22	AG0075603R	72,30	31	AG0063600R	13,50	40	AG0076200R	62,10
5	AG0061300R	15,90	14	AG0062900R	35,10	23	AG0065000R	63,10	32	AG0131800R	45,80	41	AG0064200R	33,30
6	AG0074200R	99,20	15	AG0062800R	52,80	24	AG0064500R	67,30	33	A525003807	16,70	42	AG0064109R	38,10
7	AG0061200R	5,20	16	AG0062100R	89,90	25	AG0078800R	27,90	34	AG0068500R	27,30			
8	A525006903	8,56	17	AG0065500R	16,30	26	AG0065100R	35,90	35	A5B9047C00	-			
9	AG0061409R	31,90	18	AG0078403R	7,88	27	AG0074700R	101,00	36	A5B2015C00	-			

Verona

Grifería para lavabo y bidé / Basin and bidet faucet

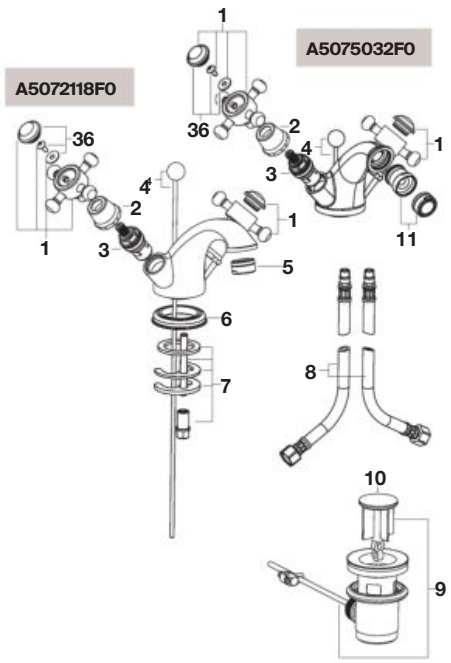

Grifería para lavabo / Basin faucet

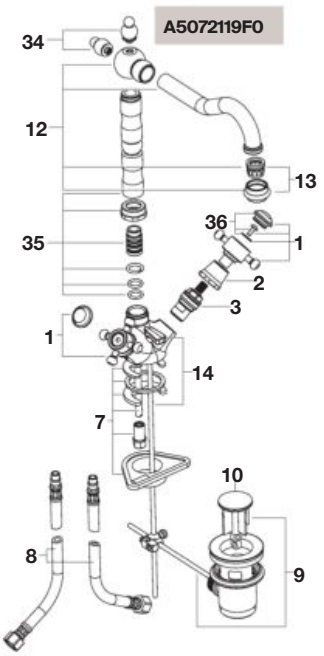

Grifería para lavabo / Basin faucet

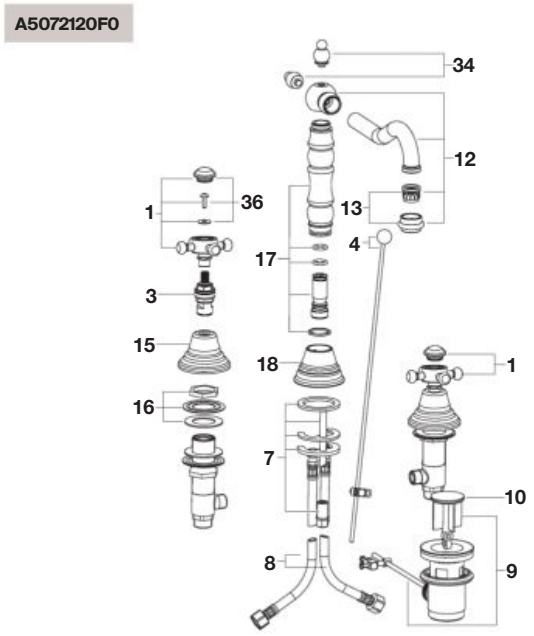

		€
1	**AG0051700R**	78,80
2	**AG0053100R**	7,88
3	**A525092709**	73,20
4	**AG0051200R**	11,70
5	**A525004700**	7,44
6	**AG0047200R**	9,85
7	**AG0046407R**	30,00
8	**A525020309**	15,00

		€
9	**AG0004700R**	60,30
10	**AG0067700R**	18,30
11	**A525089100**	32,90
12	**AG0052200R**	270,00
13	**AG0057100R**	15,50
14	**AG0057800R**	11,70
15	**AG0052500R**	35,10
16	**AG0047300R**	35,10

		€
17	**AG0052300R**	150,00
18	**AG0052400R**	119,00
19	**AG0057200R**	207,00
20	**AG0046500R**	23,60
21	**AG0196500R**	77,70
23	**A525009800**	27,10
24	**AG0057300R**	196,00
25	**AG0053200R**	30,40

		€
26	**AG0057408R**	30,40
27	**AG0057600R**	22,00
28	**AG0045700R**	19,40
29	**AG0057700R**	130,00
30	**AG0046800R**	160,00
31	**A525000800**	20,50
32	**AG0057900R**	19,00
33	**AG0058000R**	14,00

		€
34	**AG0068300R**	27,30
35	**AG0068200R**	205,00
36	**AG0046200R**	46,90

Verona

Grifería para baño y ducha / Bath and shower faucet

A5062221F0

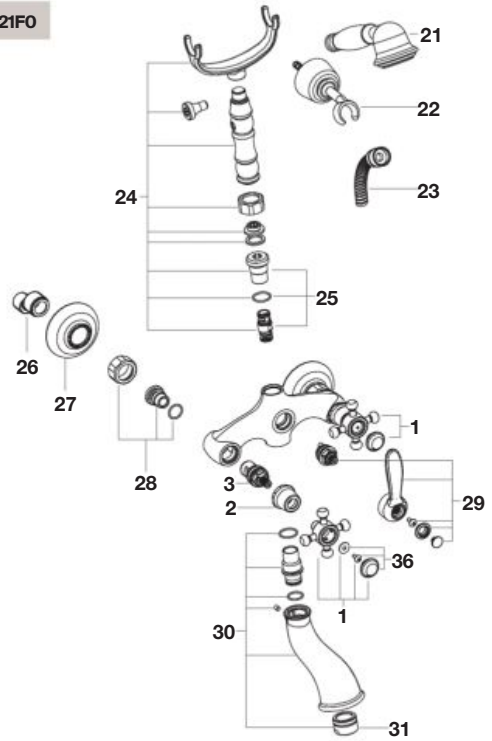

Grifería para ducha / Shower faucet

A5062222F0

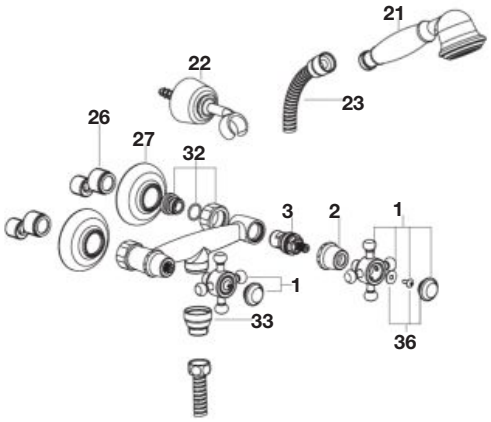

Grifería para cocina / Kitchen faucet

A5061388F0

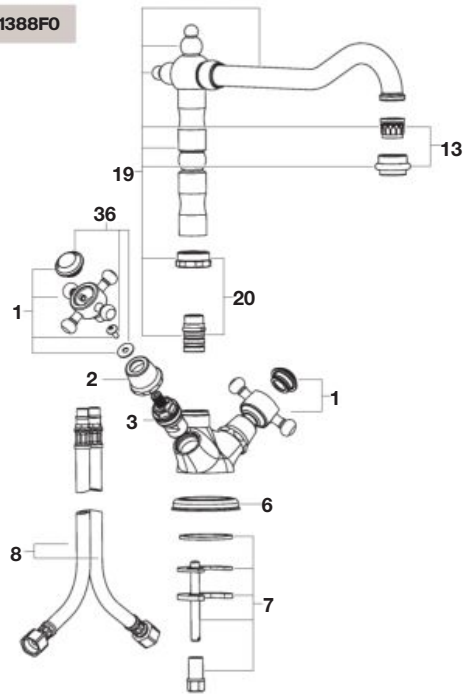

		€
1	AG0051700R	78,80
2	AG0053100R	7,88
3	A525092709	73,20
4	AG0051200R	11,70
5	A525004700	7,44
6	AG0047200R	9,85
7	AG0046407R	30,00
8	A525020309	15,00

		€
9	AG0004700R	60,30
10	AG0067700R	18,30
11	A525089100	32,90
12	AG0052200R	270,00
13	AG0057100R	15,50
14	AG0057800R	11,70
15	AG0052500R	35,10
16	AG0047300R	35,10

		€
17	AG0052300R	150,00
18	AG0052400R	119,00
19	AG0057200R	207,00
20	AG0046500R	23,60
21	AG0196500R	77,70
22	AG0053000R	N.D.
23	A525009800	27,10
24	AG0057300R	196,00

		€
25	AG0053200R	30,40
26	AG0057408R	30,40
27	AG0057600R	22,00
28	AG0045700R	19,40
29	AG0057700R	130,00
30	AG0046800R	160,00
31	A525000800	20,50
32	AG0057900R	19,00

		€
33	AG0058000R	14,00
34	AG0068300R	27,30
35	AG0068200R	205,00
36	AG0046200R	46,90

Prada

Grifería termostática para baño y ducha
Bath & shower thermostatic faucet

A5262473E0

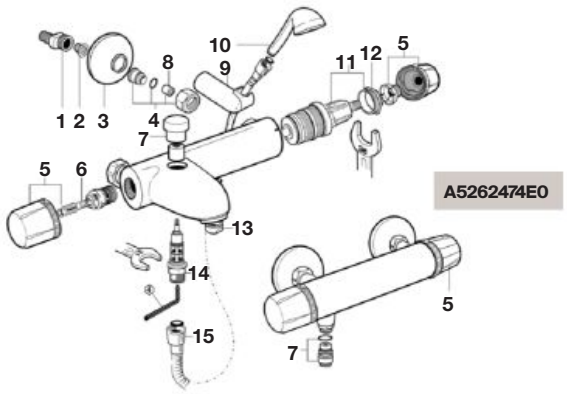

A5262474E0

Grifería termostática empotrable para baño y ducha
Wall-mounted bath & shower thermostatic faucet

A5262462E0

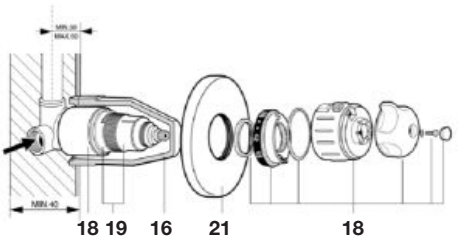

Grifería termostática empotrable para baño y ducha
Bath & shower thermostatic faucet

A5262461E0

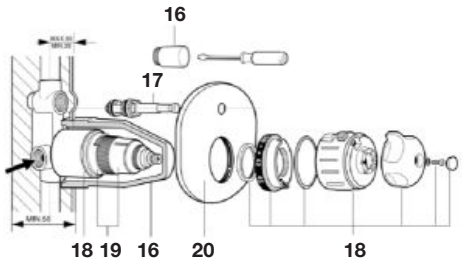

		€
1	**A525005308**	13,50
2	**A525027207**	3,88
3	**A525015300**	5,83
4	**AG0021700R**	40,90
5	**AG0028200R**	25,00

		€
6	**A525092709**	73,20
7	**AG0005300R**	11,40
8	**AG0021407R**	16,20
9	**AG0003700R**	13,70
10	**A5B5039C00**	N.D.

		€
11	**A525028003**	81,70
12	**AG0020703R**	22,60
13	**AG0029400R**	2,74
14	**A525087300**	18,90
15	**A525009800**	27,10

		€
16	**AG0028307R**	5,36
17	**A525006500**	23,30
18	**AG0028400R**	59,90
19	**AG0028503R**	209,00
20	**AG0005400R**	55,90

		€
21	**AG0005500R**	62,90

Kendo

Grifería para lavabo / Basin faucet

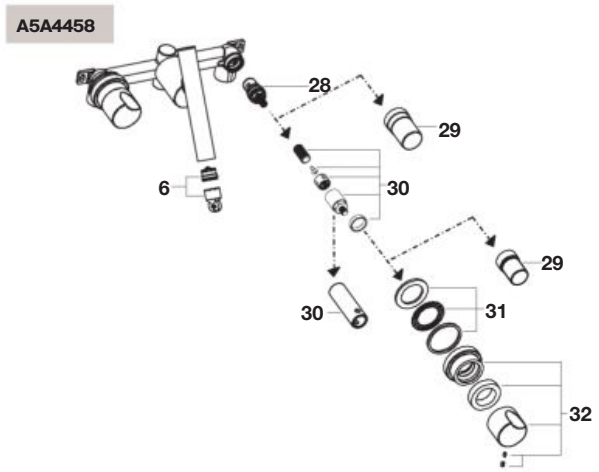

Grifería para lavabo / Basin faucet

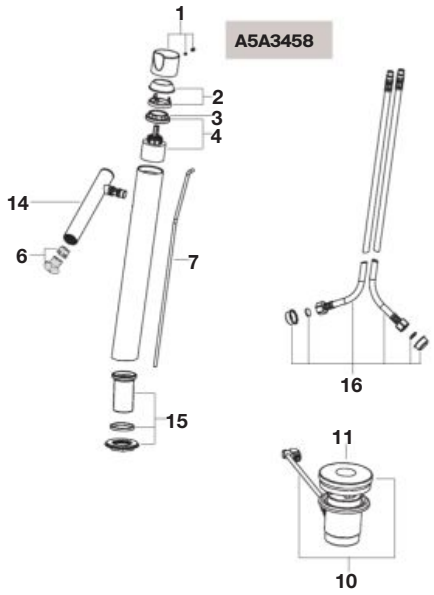

Grifería para lavabo y bidé / Basin and bidet faucet

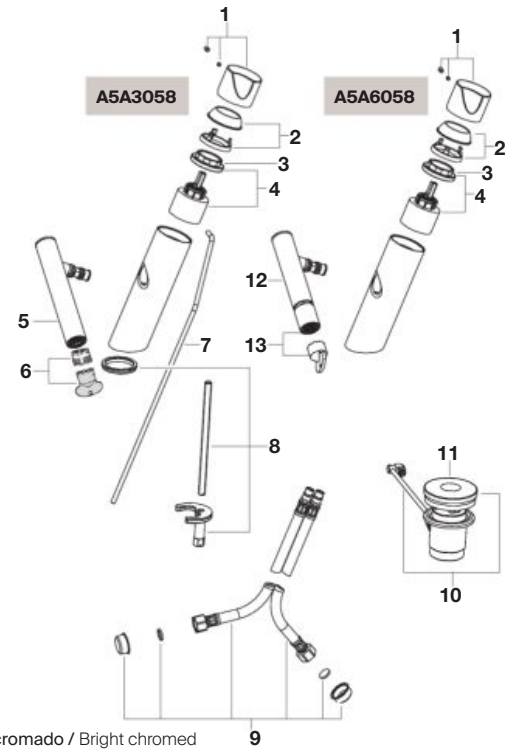

B= Brillo cromado / Bright chromed
M= Mate cromado / Matt chromed

Grifería para baño y ducha / Bath and shower faucet

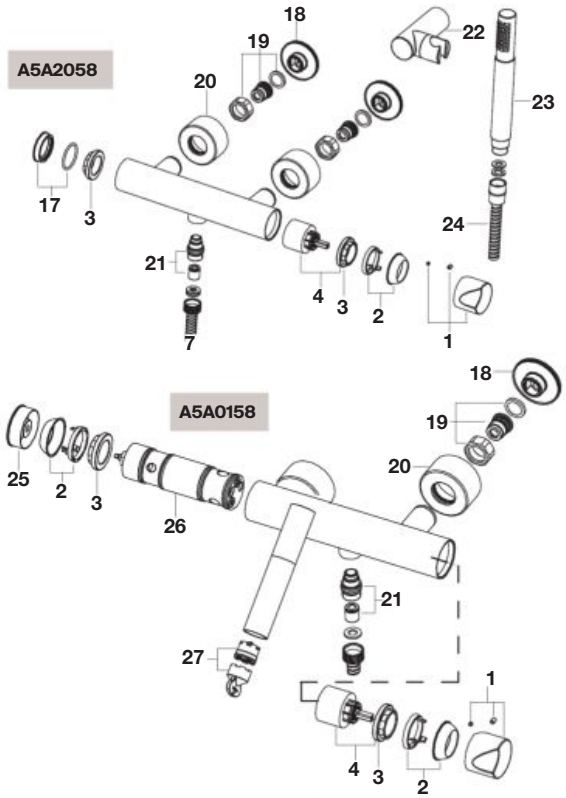

			€
1	AG0033000R	B	169,00
	AG003300ER	M	169,00
2	AG0032900R	B	23,70
	AG003290ER	M	23,70
3	A525025703		31,50
4	AG0051303R		73,90
5	AG0051400R	B	252,00
	AG005140ER	M	252,00
6	AG0053307R		36,70
7	AG0052019R		18,30
8	AG0032703R		81,40

			€
9	AG0052709R		32,90
10	A525021200		31,20
11	AG0055800R		14,40
12	AG0052600R	B	245,00
	AG005260ER	M	245,00
13	AG0052100R		55,30
14	AG0051500R		291,00
15	AG0066203R		20,00
16	AG0052809R		56,30
17	AG0066100R	B	95,60
	AG006610ER	M	N.D.

			€
18	AG0056908R		19,30
19	AG0051900R		63,90
20	AG0051600R	B	101,00
	AG005160ER	M	101,00
21	AG0061800R		46,50
22	AG0003700R		13,70
23	AG0057000R	B	78,80
	AG005700ER	M	163,00
24	AG0062200R	B	54,30
	AG006220ER	M	63,10

			€
25	AG0061900R	B	149,00
	AG006190ER	M	149,00
26	AG0057500R		177,00
27	A525087607		7,92
28	A525092709		73,20
29	AG0060907R		42,90
30	AG0062503R		51,60
31	AG0062703R		N.D.
32	AG0062600R	B	257,00
	AG006260ER	M	257,00

Silver Shadow-Crown

Grifería para lavabo y bidé / Basin and bidet faucet

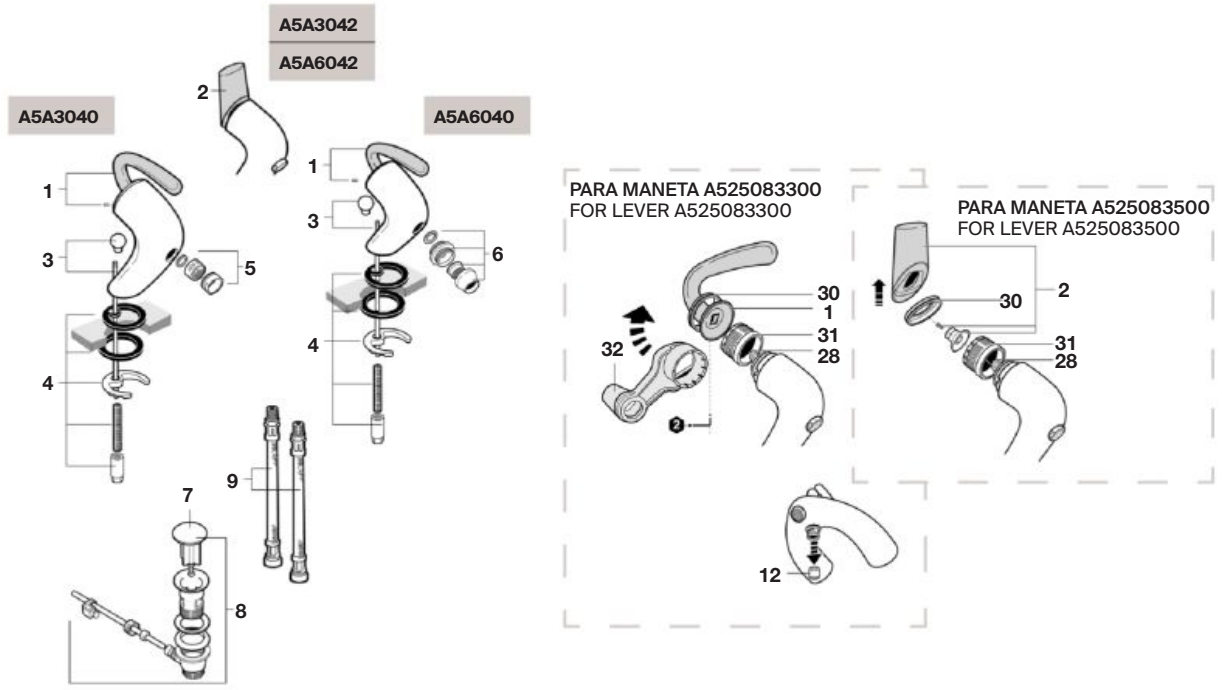

Grifería para baño y ducha / Bath and shower faucet

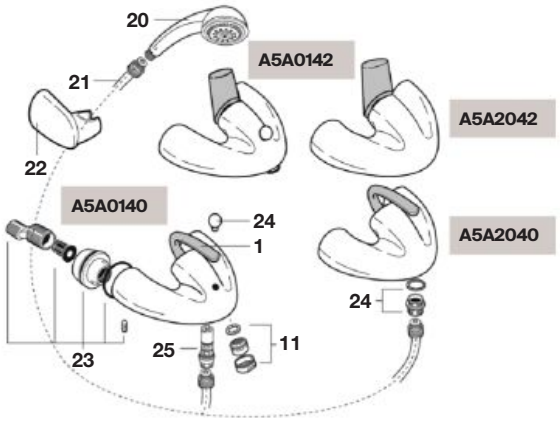

Grifería para baño y ducha / Bath and shower faucet

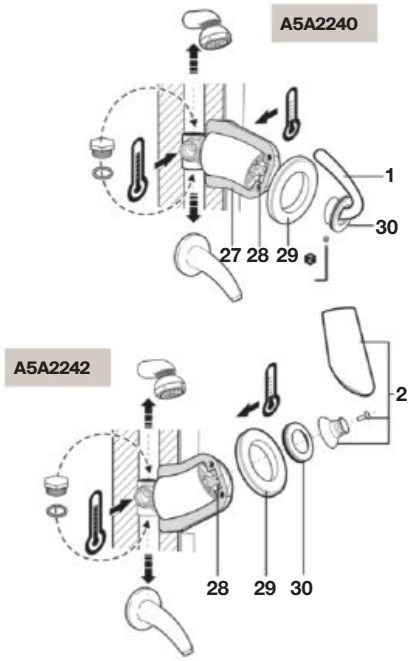

		€
1	**A525083300**	43,70
2	**A525083500**	67,30
3	**AG0000100R**	22,60
4	**AG0000203R**	13,50
5	**A525002900**	9,08
6	**A525009200**	23,30
7	**AG0055800R**	14,40

		€
8	**A525021200**	31,20
9	**A525020309**	15,00
10	**AG0056400R**	119,00
11	**A525003600**	4,85
12	**A525005507**	7,44
13	**AG0000300R**	123,00
14	**A525083900**	97,20

		€
15	**AG0000403R**	34,70
16	**AG0000503R**	19,90
17	**A525027609**	24,20
18	**AG0055700R**	50,30
19	**AG0000703R**	12,00
20	**A5B1136C00**	N.D.
21	**A525009900**	52,60

		€
22	**A526703910**	25,90
23	**A525021703**	112,00
24	**AG0000800R**	27,90
25	**A525080509**	18,40
26	**A525021907**	3,29
28	**A525081303**	49,90
29	**AG0001000R**	N.D.

		€
30	**AG0001100R**	26,50
31	**A525023507**	4,23
32	**A525005407**	7,44

Silver Shadow-Crown

Grifería para cocina / Kitchen faucet

A5A8440

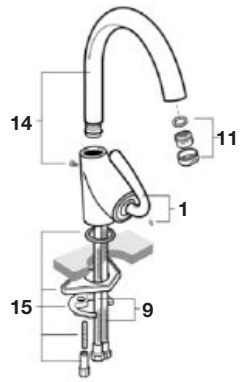

		€
1	**A525083300**	43,70
2	**A525083500**	67,30
3	**AG0000100R**	22,60
4	**AG0000203R**	13,50
5	**A525002900**	9,08
6	**A525009200**	23,30

		€
7	**AG0055800R**	14,40
8	**A525021200**	31,20
9	**A525020309**	15,00
10	**AG0056400R**	119,00
11	**A525003600**	4,85
12	**A525005507**	7,44

Grifería para cocina / Kitchen faucet

A5A8140

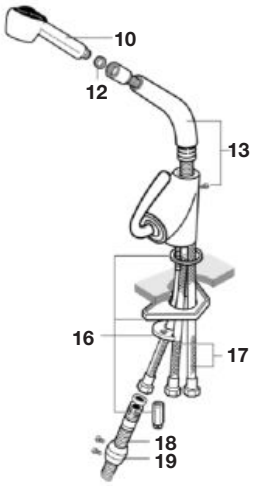

		€
13	**AG0000300R**	123,00
14	**A525083900**	97,20
15	**AG0000403R**	34,70
16	**AG0000503R**	19,90
17	**A525027609**	24,20
18	**AG0055700R**	50,30

		€
19	**AG0000703R**	12,00
21	**A525009900**	52,60
22	**A526703910**	25,90
23	**A525021703**	112,00
24	**AG0000800R**	27,90
25	**A525080509**	18,40

		€
26	**A525021907**	3,29
28	**A525081303**	49,90
30	**AG0001100R**	26,50
31	**A525023507**	4,23
32	**A525005407**	7,44

Grifería para baño y ducha / Bath and shower faucet

A5A1140

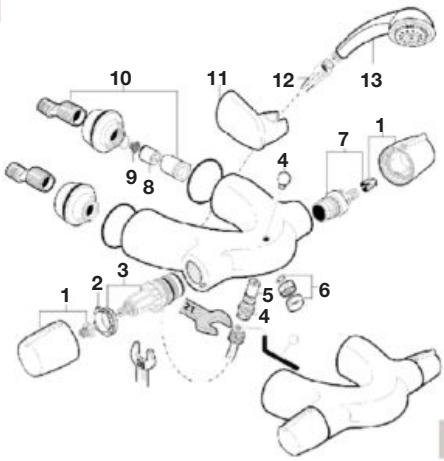

A5A1347

Grifería empotrable para baño y ducha
Wall-mounted bath & shower thermostatic faucet

A5A2940

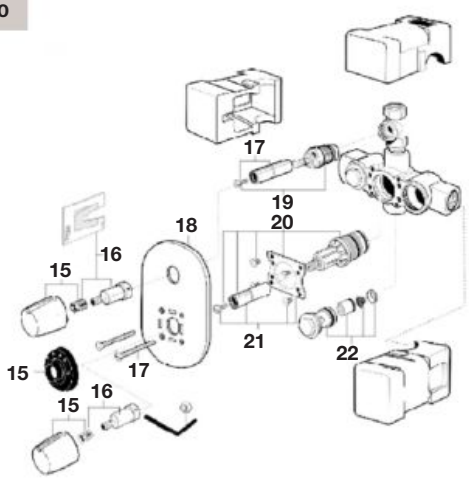

		€
1	**AG0027200R**	46,10
2	**AG0020703R**	22,60
3	**A525028003**	81,70
4	**AG0000800R**	27,90
5	**A525080509**	18,40

		€
6	**A525003600**	4,85
7	**A525092709**	73,20
8	**AG0026307R**	5,83
9	**AG0026403R**	1,68
10	**AG0026003R**	123,00

		€
11	**A526703910**	25,90
12	**A525009900**	52,60
13	**A5B1136C00**	N.D.
14	**A525021907**	3,29
15	**AG0027300R**	57,40

		€
16	**A525024303**	16,50
17	**AG0028703R**	16,40
18	**AG0028800R**	164,00
19	**A525098108**	24,40
20	**A525017303**	125,00

		€
21	**AG0021103R**	18,30
22	**A525018003**	87,70

M2

Grifería para lavabo y bidé / Basin and bidet faucet

A5272352
A5261739

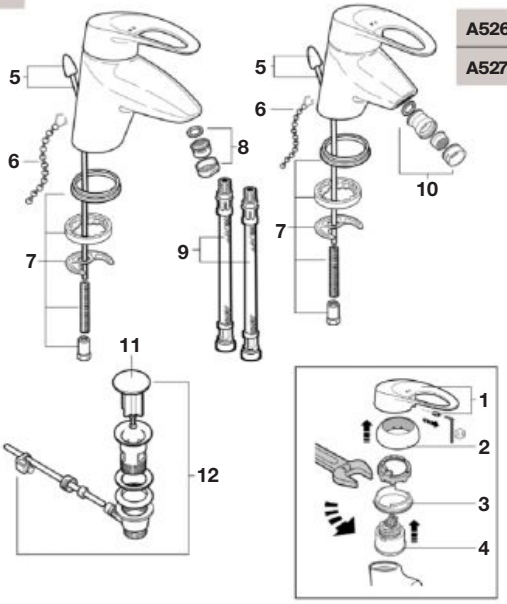

A5261740
A5275147

Grifería para baño y ducha / Bath and shower faucet

A5262483

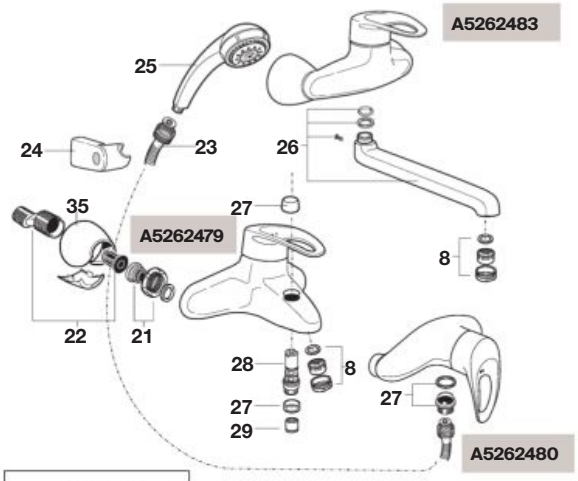

A5262479

A5262480

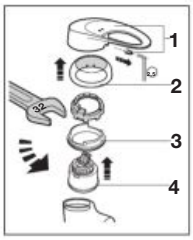

Grifería empotrable para baño y ducha
Wall-mounted bath & shower thermostatic faucet

A5262481

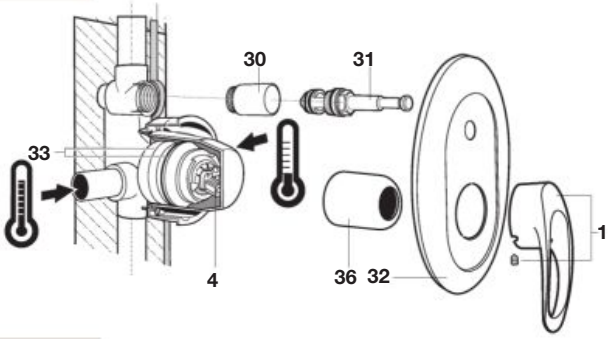

A5262482

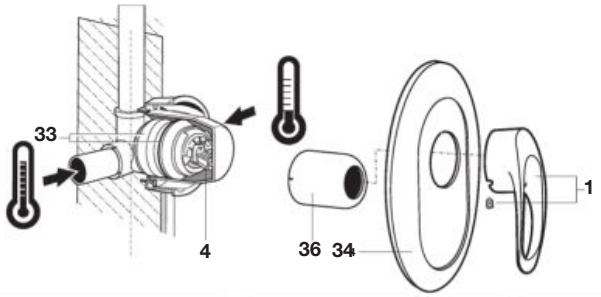

Grifería para cocina / Kitchen faucet

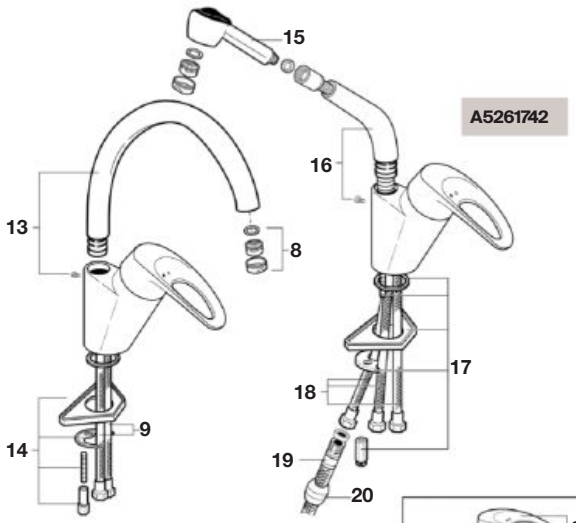

A5261742

A5261741

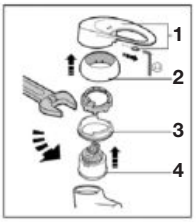

		€
1	**A525081900**	63,30
2	**AG0002700R**	5,93
3	**A525026503**	11,90
4	**A525081303**	49,90
5	**AG0003200R**	8,35
6	**A525004600**	8,20
7	**AG0002603R**	9,94
8	**A525002900**	9,08

		€
9	**A525020309**	15,00
10	**A525089100**	32,90
11	**AG0055800R**	14,40
12	**A525021200**	31,20
13	**A525083900**	97,20
14	**AG0002803R**	12,90
15	**AG0054600R**	108,00
16	**AG0002900R**	127,00

		€
17	**AG0000503R**	19,90
18	**A525027609**	24,20
19	**AG0055700R**	50,30
20	**AG0000703R**	12,00
21	**AG0002500R**	15,60
22	**A525005308**	13,50
23	**A525009800**	27,10
24	**A526703910**	25,90

		€
25	**A5B1131C00**	-
26	**AG0003300R**	51,70
27	**AG0053600R**	7,00
28	**A525087300**	18,90
29	**A525005507**	7,44
31	**A525006500**	23,30
32	**AG0005400R**	55,90
33	**A525026703**	33,60

		€
34	**AG0004100R**	63,90
35	**AG0037300R**	23,50
36	**AG0044800R**	37,10

Logica

Grifería para lavabo y bidé / Basin and bidet faucet

A5272321
A5261640

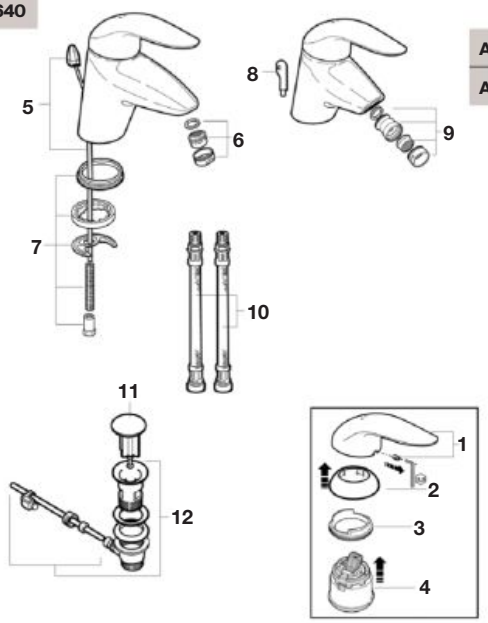

A5275123
A5261641

Grifería para baño y ducha / Bath and shower faucet

A5262339

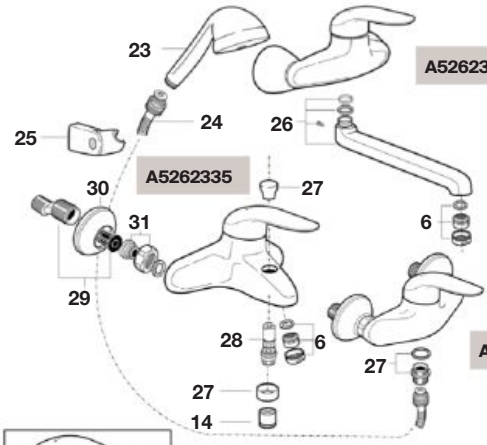

A5262335
A5262338

Grifería para baño y ducha / Bath and shower faucet

A5262353

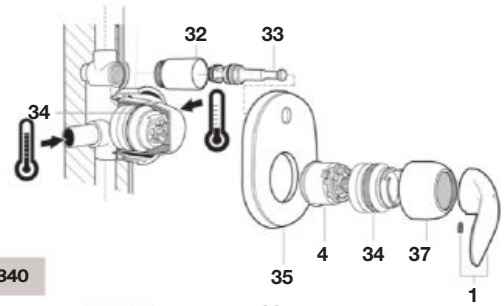

A5262340

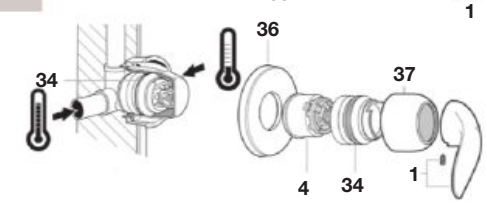

		€
1	A525082300	54,80
2	AG0082600R	5,52
3	A525026503	11,90
4	A525081303	49,90
5	AG0000100R	22,60
6	A525002900	9,08
7	AG0002603R	9,94
8	A525004600	8,20

		€
9	A525089100	32,90
10	A525020309	15,00
11	AG0055800R	14,40
12	A525021200	31,20
13	AG0054600R	108,00
14	A525005507	7,44
15	AG0002900R	127,00
16	A525083900	97,20

		€
17	AG0002803R	12,90
18	AG0000503R	19,90
19	A525027609	24,20
20	AG0055700R	50,30
21	AG0000703R	12,00
22	A525026307	13,60
23	A5B5039C00	N.D.
24	A525009800	27,10

		€
25	A526703910	25,90
26	AG0003300R	51,70
27	AG0053600R	7,00
28	A525087300	18,90
29	A525005308	13,50
30	A525015300	5,83
31	AG0002500R	15,60
33	A525006500	23,30

		€
34	A525026703	33,60
35	AG0005400R	55,90
36	AG0005500R	62,90
37	AG0044800R	37,10

Logica

Grifería para cocina / Kitchen faucet

A5261656

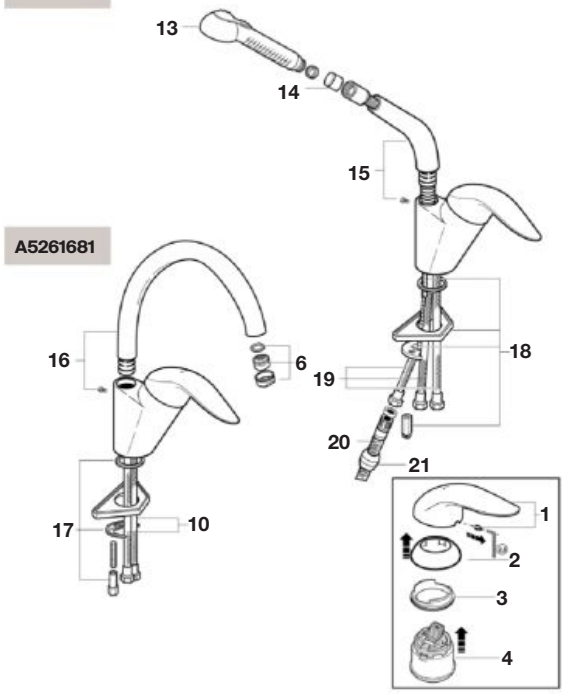

Grifería para cocina / Kitchen faucet

A5261645

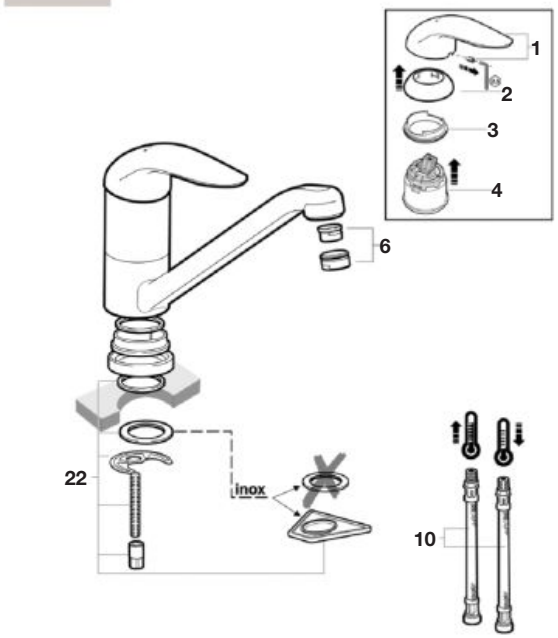

		€
1	**A525082300**	54,80
2	**AG0082600R**	5,52
3	**A525026503**	11,90
4	**A525081303**	49,90
5	**AG0000100R**	22,60
6	**A525002900**	9,08
7	**AG0002603R**	9,94
8	**A525004600**	8,20

		€
9	**A525089100**	32,90
10	**A525020309**	15,00
11	**AG0055800R**	14,40
12	**A525021200**	31,20
13	**AG0054600R**	108,00
14	**A525005507**	7,44
15	**AG0002900R**	127,00
16	**A525083900**	97,20

		€
17	**AG0002803R**	12,90
18	**AG0000503R**	19,90
19	**A525027609**	24,20
20	**AG0055700R**	50,30
21	**AG0000703R**	12,00
22	**A525026307**	13,60
23	**A5B5039C00**	N.D.
24	**A525009800**	27,10

		€
25	**A526703910**	25,90
26	**AG0003300R**	51,70
27	**AG0053600R**	7,00
28	**A525087300**	18,90
29	**A525005308**	13,50
30	**A525015300**	5,83
31	**AG0002500R**	15,60
33	**A525006500**	23,30

		€
34	**A525026703**	33,60
35	**AG0005400R**	55,90
36	**AG0005500R**	62,90
37	**AG0044800R**	37,10

Monodin Top

Grifería para lavabo y bidé / Basin and bidet faucet

A5A3035
A5A3135

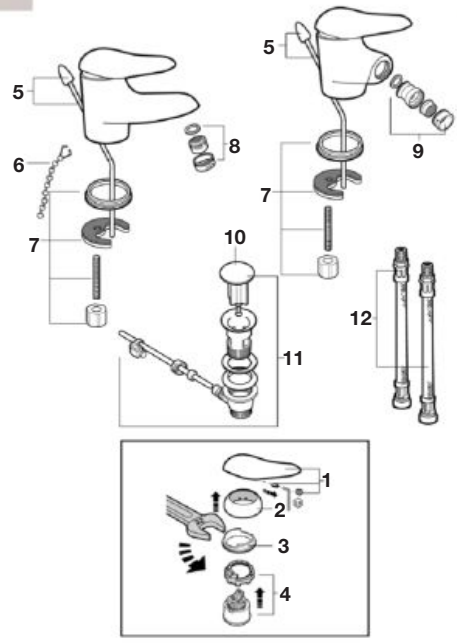

A5A6035
A5A6135

Grifería para baño y ducha / Basin and bidet faucet

A5A0135

A5A7635

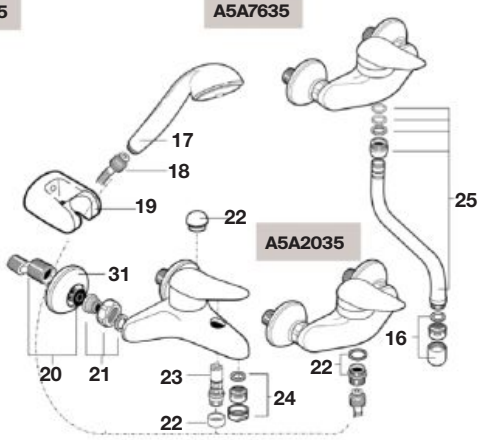

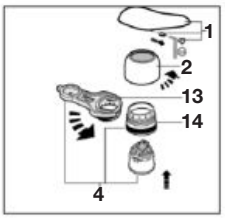

Grifería empotrable para baño y ducha
Wall-mounted bath and shower faucet

A5A0635

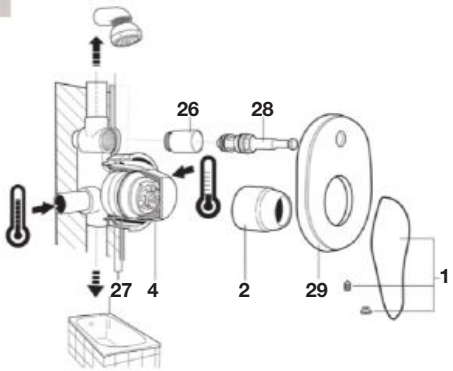

A5A2235

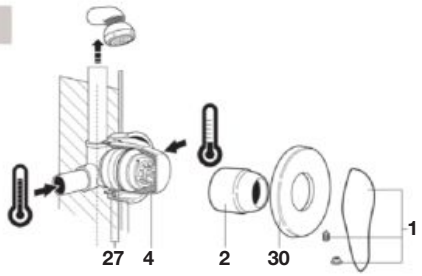

Grifería para cocina / Kitchen faucet

A5A8435

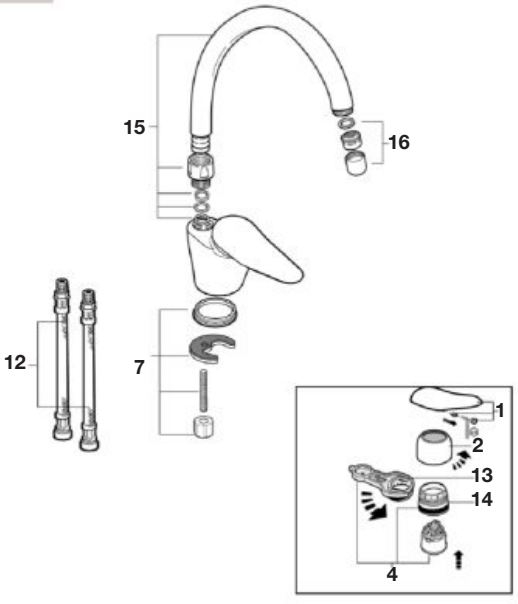

		€
1	A525083200	49,60
2	AG0009400R	56,70
3	A525026503	11,90
4	A525081303	49,90
5	AG0002100R	8,45
6	A525004600	8,20
7	A525025303	8,35

		€
8	A525004700	7,44
9	A525089100	32,90
10	AG0055800R	14,40
11	A525021200	31,20
12	A525020309	15,00
13	A525005407	7,44
14	A525023507	4,23

		€
15	A525085000	68,40
16	A525006600	7,44
17	A5B9035C00	N.D.
18	A525009800	27,10
19	A525007800	11,10
20	A525005308	13,50
21	AG0002500R	15,60

		€
22	AG0005300R	11,40
23	A525087300	18,90
24	A525003600	4,85
25	A525083600	60,50
27	A525026703	33,60
28	A525006500	23,30
29	AG0005400R	55,90

		€
30	AG0005500R	62,90
31	A525015300	5,83

Monodin Top

Grifería termostática para baño y ducha
Bath & shower thermostatic faucet

A5A1135

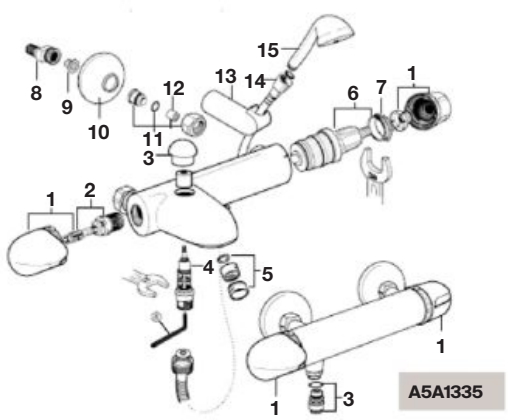

		€
1	**AG0028600R**	N.D.
2	**A525092709**	73,20
3	**AG0005300R**	11,40

		€
4	**A525087300**	18,90
5	**AG0029400R**	2,74
6	**A525028003**	81,70

		€
7	**AG0020703R**	22,60
8	**A525005308**	13,50
9	**A525027207**	3,88

		€
10	**A525015300**	5,83
11	**AG0021700R**	40,90
12	**AG0021407R**	16,20

		€
13	**AG0003700R**	13,70
14	**A525009800**	27,10
15	**A5B5039C00**	N.D.

Victoria Plus

Grifería para lavabo y bidé / Basin and bidet faucet

A5272327B0
A5261659B0

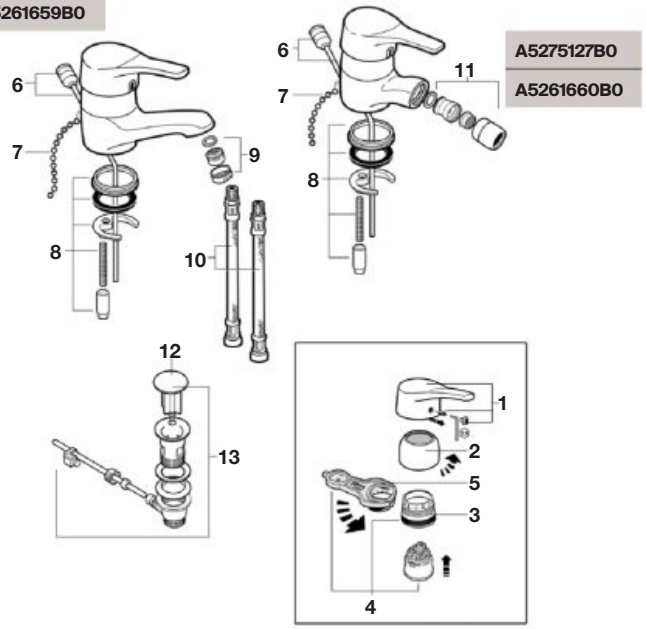

A5275127B0
A5261660B0

Grifería para baño y ducha / Bath and shower faucet

A5262370B0

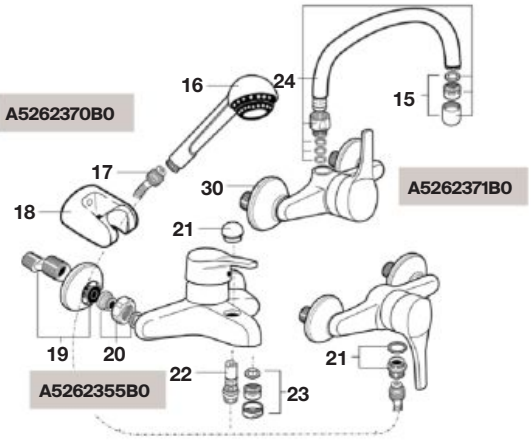

A5262371B0

A5262355B0

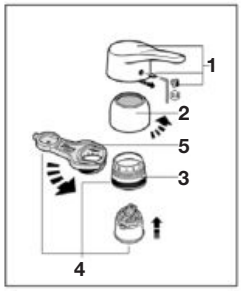

Grifería para baño y ducha / Bath and shower faucet

A5262389B0

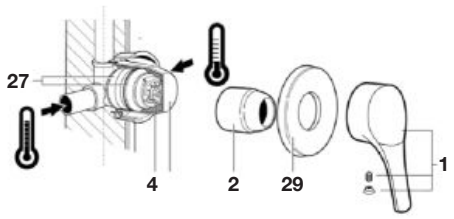

A5262388B0

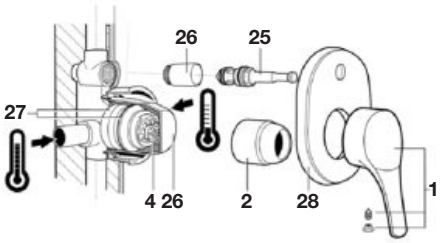

Grifería para cocina / Kitchen faucet

A5261675B0

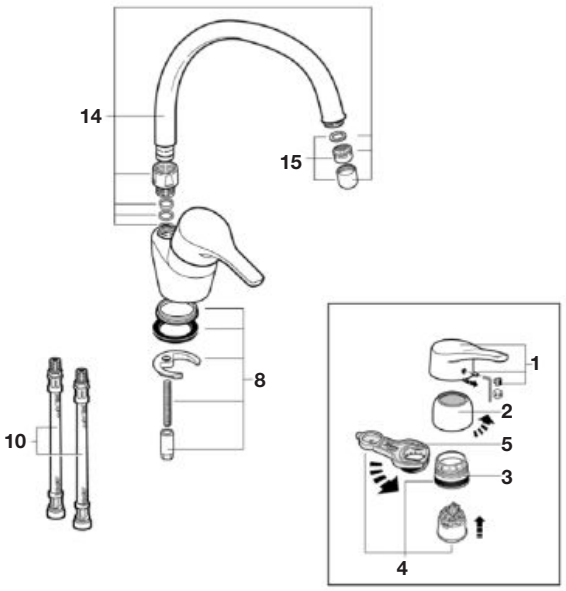

		€
1	**A525082900**	38,50
2	**AG0009300R**	N.D.
3	**A525023507**	4,23
4	**A525081303**	49,90
5	**A525005407**	7,44
6	**AG0005000R**	N.D.

		€
7	**A525004600**	8,20
8	**AG0005103R**	7,95
9	**A525002900**	9,08
10	**A525020309**	15,00
11	**A525010900**	6,24
12	**AG0055800R**	14,40

		€
13	**A525021200**	31,20
14	**AG0002200R**	45,00
15	**A525006600**	7,44
16	**AG005460BR**	60,20
17	**A525009800**	27,10
18	**A52500780B**	10,90

		€
19	**A525005308**	13,50
20	**AG0002500R**	15,60
21	**AG0005300R**	11,40
22	**A525087300**	18,90
23	**A525003600**	4,85
24	**A525084000**	60,50

		€
25	**A525006500**	23,30
26	**AG0003107R**	N.D.
27	**A525026503**	11,90
28	**AG0005400R**	55,90
29	**AG0005500R**	62,90
30	**A525015300**	5,83

Brava Retro

Grifería para lavabo / Basin faucet

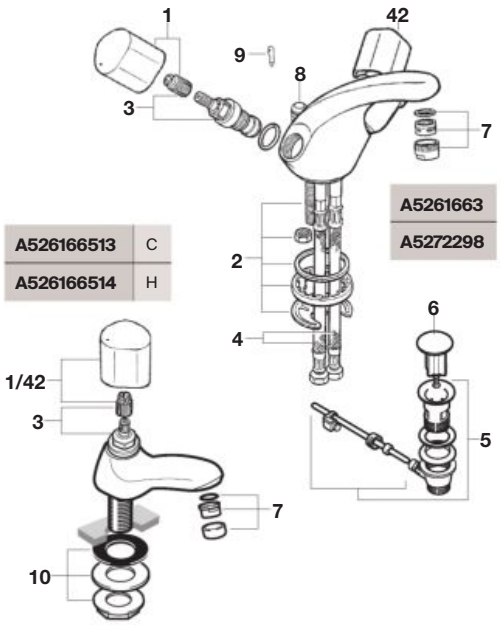

Grifería para lavabo / Basin faucet

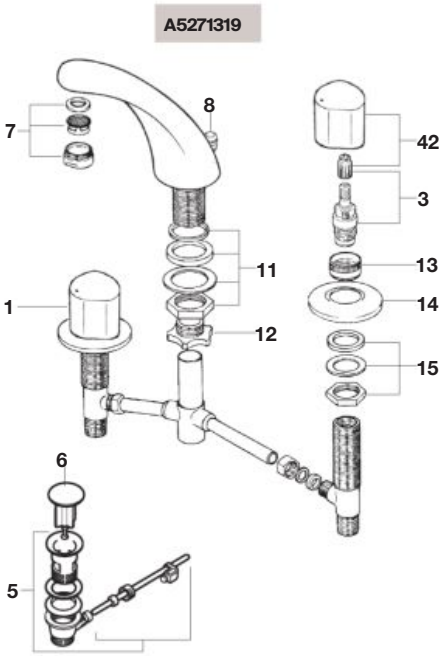

Grifería para lavabo / Basin faucet

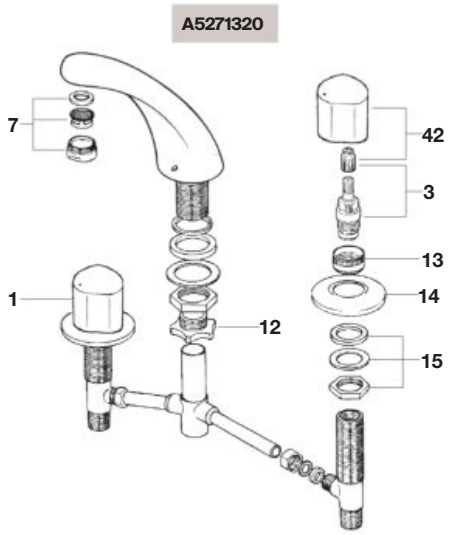

Grifería para bidé / Bidet faucet

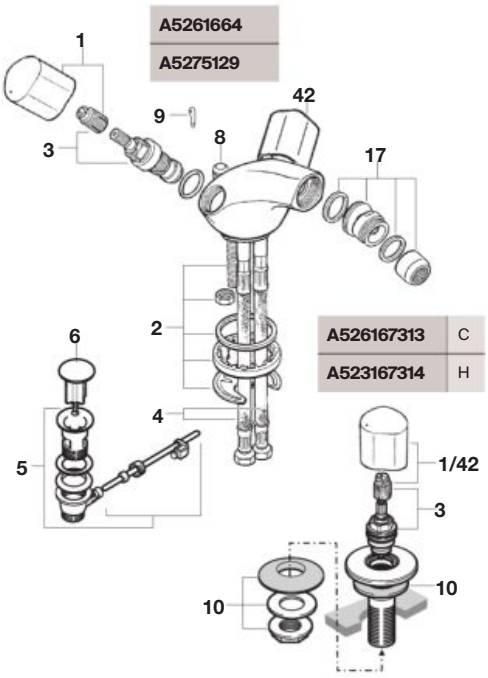

H- Índice caliente / Hot index
C- Índice frío / Cold index

			€
1	**AG0075000R**	H	18,30
2	**AG0045903R**		10,30
3	**A525098108**	2 un	24,40
4	**A525020309**		15,00
5	**A525021200**		31,20
6	**AG0055800R**		14,40
7	**A525002900**		9,08
8	**AG0046000R**		6,14
9	**A525004600**		8,20
10	**AG0049803R**		12,00
11	**AG0050003R**		10,50

		€
12	**AG0050207R**	4,91
13	**AG0050307R**	6,45
14	**AG0050100R**	40,60
15	**AG0049903R**	19,90
17	**A525089100**	32,90
18	**AG0027000R**	60,90
19	**A525006600**	7,44
20	**A525084200**	60,50
21	**A525084000**	60,50
22	**AG0085400R**	8,41
23	**AG0050507R**	51,40

		€
24	**AG0002500R**	15,60
25	**A525084600**	55,30
26	**A525084400**	134,00
27	**AG005460BR**	60,20
28	**A52500780B**	10,90
29	**A525009800**	27,10
30	**AG0005300R**	11,40
31	**A525087300**	18,90
32	**A525005507**	7,44
33	**A525003600**	4,85
34	**A525023200**	11,90

			€
35	**AG0050700R**		7,73
36	**AG0050603R**		3,88
37	**AG0029400R**		2,74
38	**A525096700**		9,53
39	**AG0050800R**		16,10
40	**AG0050903R**		6,05
41	**AG0051003R**		72,30
42	**AG0075100R**	C	18,30

Brava Retro

Grifería para baño y ducha / Bath and shower faucet

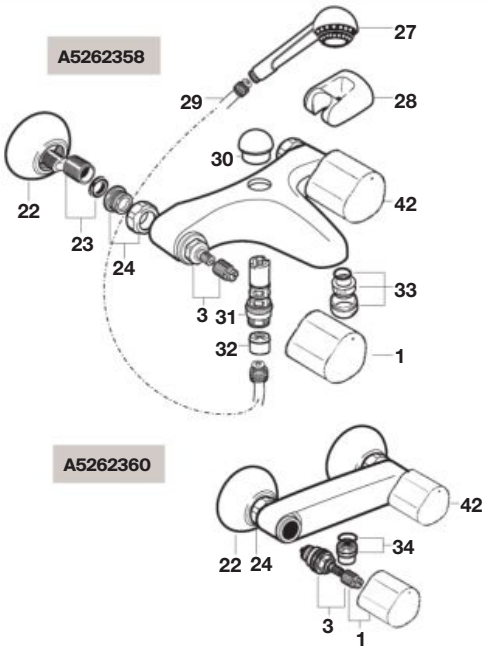

Grifería para cocina y lavadero
Kitchen and laundry faucet

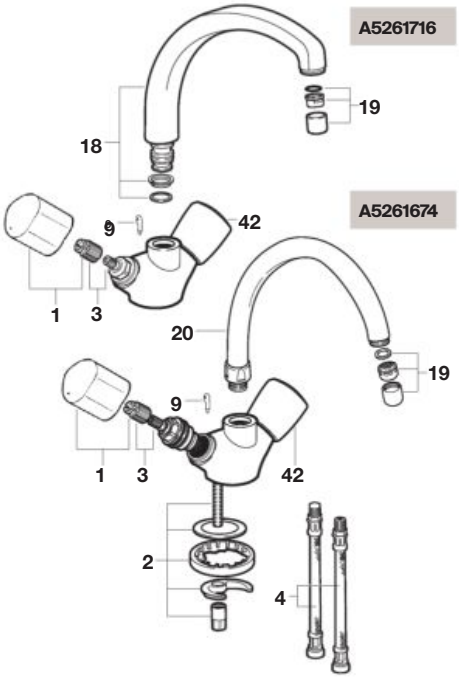

Grifería para cocina y lavadero
Kitchen and laundry faucet

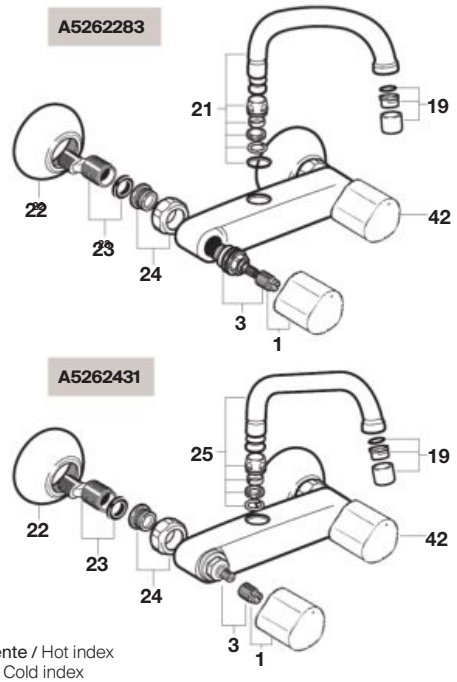

Grifería para cocina y lavadero
Kitchen and laundry faucet

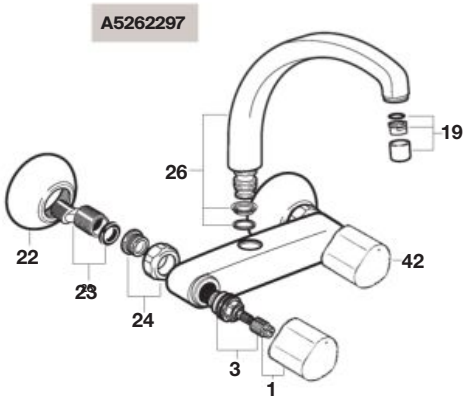

H- Índice caliente / Hot index
C- Índice frío / Cold index

			€
1	**AG0075000R**	H	18,30
2	**AG0045903R**		10,30
3	**A525098108**		24,40
4	**A525020309**		15,00
5	**A525021200**		31,20
6	**AG0055800R**		14,40
7	**A525002900**		9,08
8	**AG0046000R**		6,14
9	**A525004600**		8,20
10	**AG0049803R**		12,00
11	**AG0050003R**		10,50

		€
12	**AG0050207R**	4,91
13	**AG0050307R**	6,45
14	**AG0050100R**	40,60
15	**AG0049903R**	19,90
17	**A525089100**	32,90
18	**AG0027000R**	60,90
19	**A525006600**	7,44
20	**A525084200**	60,50
21	**A525084000**	60,50
22	**AG0085400R**	8,41
23	**AG0050507R**	51,40

		€
24	**AG0002500R**	15,60
25	**A525084600**	55,30
26	**A525084400**	134,00
27	**AG005460BR**	60,20
28	**A52500780B**	10,90
29	**A525009800**	27,10
30	**AG0005300R**	11,40
31	**A525087300**	18,90
32	**A525005507**	7,44
33	**A525003600**	4,85
34	**A525023200**	11,90

			€
35	**AG0050700R**		7,73
36	**AG0050603R**		3,88
37	**AG0029400R**		2,74
38	**A525096700**		9,53
39	**AG0050800R**		16,10
40	**AG0050903R**		6,05
41	**AG0051003R**		72,30
42	**AG0075100R**	C	18,30

Brava Retro

Llaves de paso / Valves

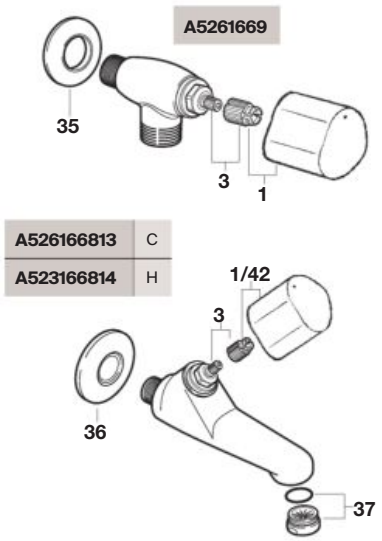

Llaves de paso / Valves

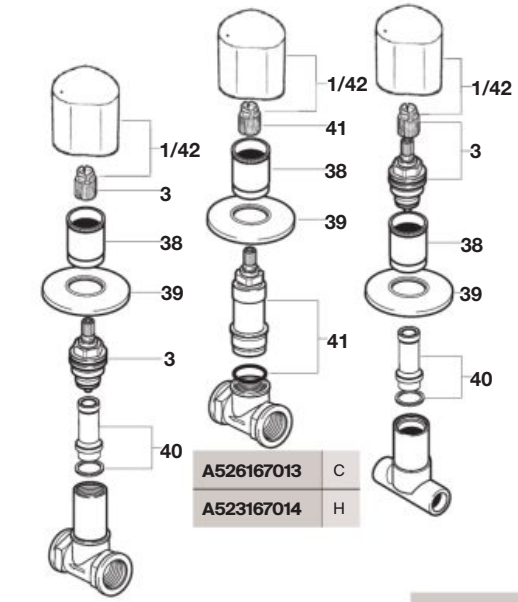

Ø 15 mm	A526169113	C
	A523169114	H
Ø 18 mm	A526167213	C
	A523167214	H
Ø 22 mm	A526169213	C
	A523169214	H

H- Índice caliente / Hot index
C- Índice frío / Cold index

			€
1	AG0075000R	H	18,30
2	AG0045903R		10,30
3	A525098108		24,40
4	A525020309		15,00
5	A525021200		31,20
6	AG0055800R		14,40
7	A525002900		9,08
8	AG0046000R		6,14
9	A525004600		8,20
10	AG0049803R		12,00
11	AG0050003R		10,50

		€
12	AG0050207R	4,91
13	AG0050307R	6,45
14	AG0050100R	40,60
15	AG0049903R	19,90
17	A525089100	32,90
18	AG0027000R	60,90
19	A525006600	7,44
20	A525084200	60,50
21	A525084000	60,50
22	AG0085400R	8,41
23	AG0050507R	51,40

		€
24	AG0002500R	15,60
25	A525084600	55,30
26	A525084400	134,00
27	AG005460BR	60,20
28	A52500780B	10,90
29	A525009800	27,10
30	AG0005300R	11,40
31	A525087300	18,90
32	A525005507	7,44
33	A525003600	4,85
34	A525023200	11,90

			€
35	AG0050700R		7,73
36	AG0050603R		3,88
37	AG0029400R		2,74
38	A525096700		9,53
39	AG0050800R		16,10
40	AG0050903R		6,05
41	AG0051003R		72,30
42	AG0075100R	C	18,30

Atai

Grifería para lavabo / Basin faucet

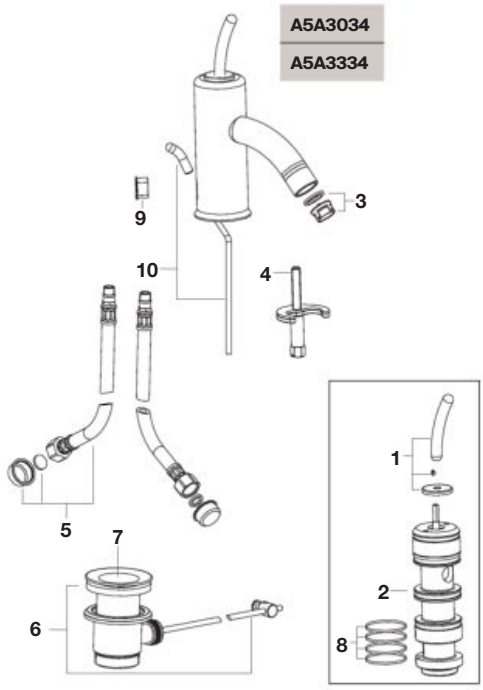

Grifería para bidé / Bidet faucet

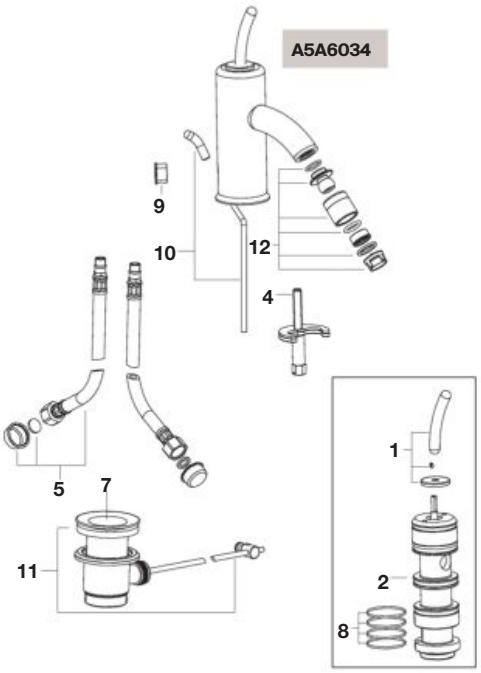

B= Brillo cromado / Chromed bright
M= Mate cromado / Matt chromed

			€
1	**AG0058400R**	B	N.D.
	AG005840ER	M	71,10
2	**AG0058500R**		N.D.
3	**AG0058600R**	B	22,00
	AG005860ER	M	21,10
4	**AG0058700R**		24,20
5	**AG0059109R**		67,30
6	**AG0068000R**	B	37,10
7	**AG0055800R**		14,40
8	**AG0067807R**		3,88
9	**AG0058900R**	B	5,11
10	**AG0059000R**	B	39,60
	AG005900ER	M	N.D.
11	**A525021200**	B	31,20
	AG006810ER	M	41,80

			€
12	**AG0058800R**	B	55,30
	AG005880ER	M	63,90
13	**AG0059300R**	B	39,90
	AG005930ER	M	43,30
14	**AG0045100R**		53,50
15	**AG0059700R**		26,50
16	**AG0059209R**		N.D.
17	**AG0059400R**	B	95,20
	AG005940ER	M	95,20
18	**AG0059500R**	B	77,70
	AG005950ER	M	73,50
19	**AG0059600R**		N.D.
20	**AG0059800R**		5,06
21	**AG0059900R**		11,20
22	**AG0060100R**	B	411,00
	AG006010ER	M	N.D.

			€
23	**AG0060200R**		108,00
24	**AG0045200R**		62,00
25	**AG0060300R**	B	87,40
	AG006030ER	M	N.D.
26	**AG0045300R**	B	N.D.
	AG004530ER	M	76,20
27	**AG0060400R**		36,20
28	**AG0062200R**	B	54,30
	AG006220ER	M	63,10
29	**AG0067300R**	B	69,70
	AG006730ER	M	67,90
30	**AG0060000R**	B	30,00
	AG006000ER	M	84,90
31	**AG0060500R**	B	276,00
	AG006050ER	M	281,00

			€
32	**AG0060600R**	B	91,20
	AG006060ER	M	94,70
33	**AG0045400R**	B	82,00
	AG004540ER	M	82,00
34	**AG0045500R**	B	441,00
	AG004550ER	M	400,00
35	**AG0060800R**		11,20
36	**AG0060907R**		42,90
37	**AG0060700R**	B	157,00
	AG006070ER	M	161,00
38	**A525092709**		73,20
39	**AG0046100R**		152,00

Atai

Grifería de caño alto para lavabo
Extended height basin faucet

A5A3434

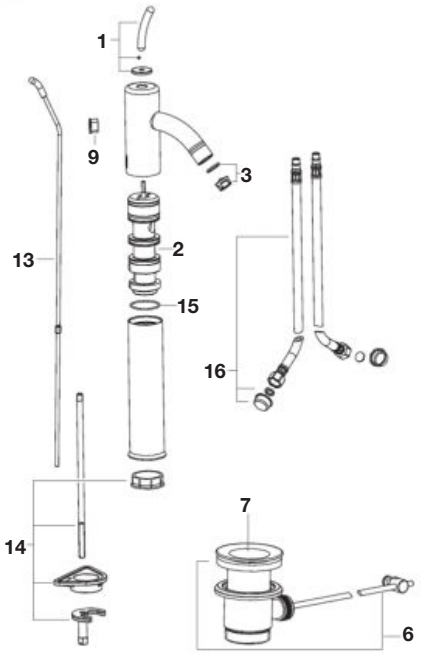

Grifería empotrable mural para lavabo
Wall-mounted mural basin faucet

A5A4434

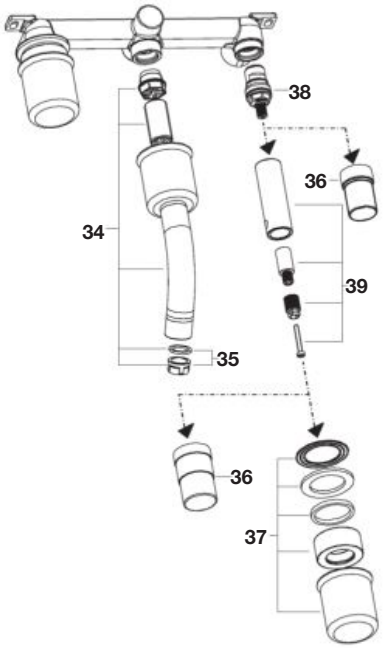

B= Brillo cromado / Chromed bright
M= Mate cromado / Matt chromed

			€
1	**AG0058400R**	B	N.D.
	AG005840ER	M	71,10
2	**AG0058500R**		N.D.
3	**AG0058600R**	B	22,00
	AG005860ER	M	21,10
4	**AG0058700R**		24,20
5	**AG0059109R**		67,30
6	**AG0068000R**	B	37,10
7	**AG0055800R**		14,40
8	**AG0067807R**		3,88
9	**AG0058900R**	B	5,11
10	**AG0059000R**	B	39,60
	AG005900ER	M	N.D.
11	**A525021200**	B	31,20
	AG006810ER	M	41,80

			€
12	**AG0058800R**	B	55,30
	AG005880ER	M	63,90
13	**AG0059300R**	B	39,90
	AG005930ER	M	43,30
14	**AG0045100R**		53,50
15	**AG0059700R**		26,50
16	**AG0059209R**		N.D.
17	**AG0059400R**	B	95,20
	AG005940ER	M	95,20
18	**AG0059500R**	B	77,70
	AG005950ER	M	73,50
19	**AG0059600R**		N.D.
20	**AG0059800R**		5,06
21	**AG0059900R**		11,20
22	**AG0060100R**	B	411,00
	AG006010ER	M	N.D.

			€
23	**AG0060200R**		108,00
24	**AG0045200R**		62,00
25	**AG0060300R**	B	87,40
	AG006030ER	M	N.D.
26	**AG0045300R**	B	N.D.
	AG004530ER	M	76,20
27	**AG0060400R**		36,20
28	**AG0062200R**	B	54,30
	AG006220ER	M	63,10
29	**AG0067300R**	B	69,70
	AG006730ER	M	67,90
30	**AG0060000R**	B	30,00
	AG006000ER	M	84,90
31	**AG0060500R**	B	276,00
	AG006050ER	M	281,00

			€
32	**AG0060600R**	B	91,20
	AG006060ER	M	94,70
33	**AG0045400R**	B	82,00
	AG004540ER	M	82,00
34	**AG0045500R**	B	441,00
	AG004550ER	M	400,00
35	**AG0060800R**		11,20
36	**AG0060907R**		42,90
37	**AG0060700R**	B	157,00
	AG006070ER	M	161,00
38	**A525092709**		73,20
39	**AG0046100R**		152,00

Atai

Grifería para baño ducha / Bath and shower faucet

A5A2034

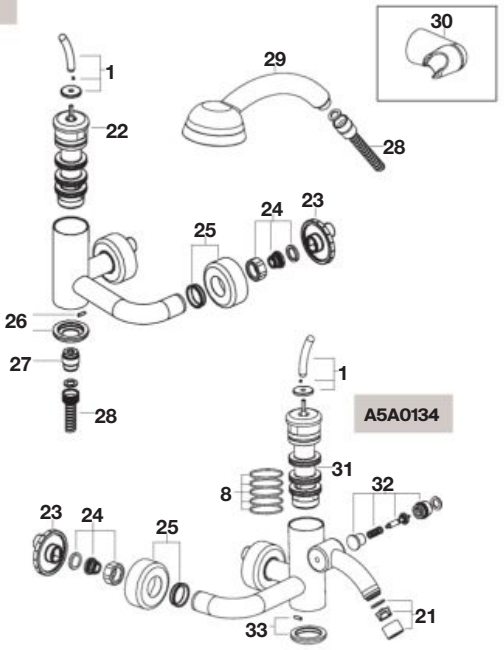

Grifería para cocina / Kitchen faucet

A5A8434

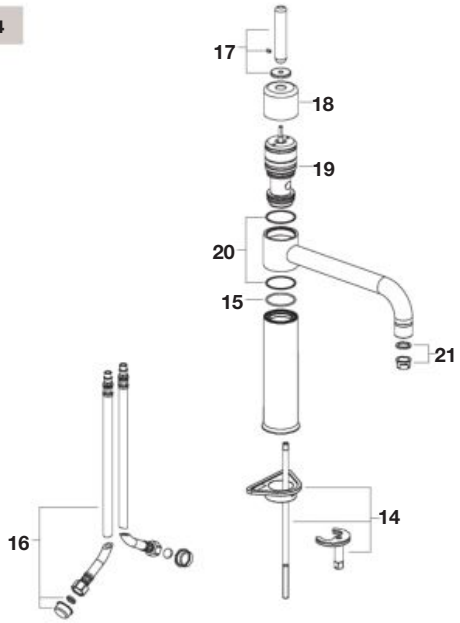

B= Brillo cromado / Chromed bright
M= Mate cromado / Matt chromed

			€
1	**AG0058400R**	B	N.D.
	AG005840ER	M	71,10
2	**AG0058500R**		N.D.
3	**AG0058600R**	B	22,00
	AG005860ER	M	21,10
4	**AG0058700R**		24,20
5	**AG0059109R**		67,30
6	**AG0068000R**	B	37,10
7	**AG0055800R**		14,40
8	**AG0067807R**		3,88
9	**AG0058900R**	B	5,11
10	**AG0059000R**	B	39,60
	AG005900ER	M	N.D.
11	**A525021200**	B	31,20
	AG006810ER	M	41,80

			€
12	**AG0058800R**	B	55,30
	AG005880ER	M	63,90
13	**AG0059300R**	B	39,90
	AG005930ER	M	43,30
14	**AG0045100R**		53,50
15	**AG0059700R**		26,50
16	**AG0059209R**		N.D.
17	**AG0059400R**	B	95,20
	AG005940ER	M	95,20
18	**AG0059500R**	B	77,70
	AG005950ER	M	73,50
19	**AG0059600R**		N.D.
20	**AG0059800R**		5,06
21	**AG0059900R**		11,20
22	**AG0060100R**	B	411,00
	AG006010ER	M	N.D.

			€
23	**AG0060200R**		108,00
24	**AG0045200R**		62,00
25	**AG0060300R**	B	87,40
	AG006030ER	M	N.D.
26	**AG0045300R**	B	N.D.
	AG004530ER	M	76,20
27	**AG0060400R**		36,20
28	**AG0062200R**	B	54,30
	AG006220ER	M	63,10
29	**AG0067300R**	B	69,70
	AG006730ER	M	67,90
30	**AG0060000R**	B	30,00
	AG006000ER	M	84,90
31	**AG0060500R**	B	276,00
	AG006050ER	M	281,00

			€
32	**AG0060600R**	B	91,20
	AG006060ER	M	94,70
33	**AG0045400R**	B	82,00
	AG004540ER	M	82,00
34	**AG0045500R**	B	441,00
	AG004550ER	M	400,00
35	**AG0060800R**		11,20
36	**AG0060907R**		42,90
37	**AG0060700R**	B	157,00
	AG006070ER	M	161,00
38	**A525092709**		73,20
39	**AG0046100R**		152,00

Fit

Rociador antivandálico / Vandal-proof shower head

A5B6679C00

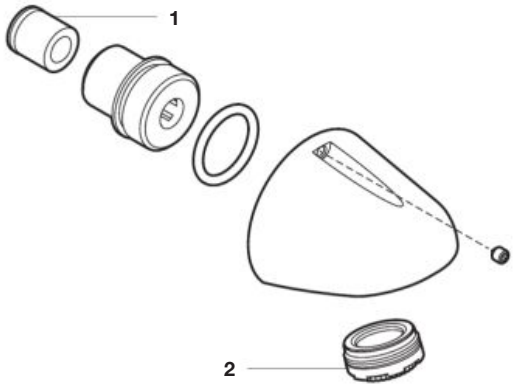

		€
1	**AG0112307R**	14,20
2	**AG0100107R**	19,50

Duchas, rociadores y barras
Showers, shower heads & bars



Soporte articulado / Articulated support

			€
Para ducha de mano (flexo cónico) / For handheld shower (conical hose)	Cromado	**AG0105900R**	8,97



Soporte articulado / Articulated support

				€
Para ducha teléfono / For handheld shower		Cromado / Chromed	**A526703910**	25,90
		Blanco / White	**A52670391B**	20,30
	Loft	Cromado / Chromed	**AG0067000R**	58,50
	Touch	Cromado / Chromed	**A525021600**	32,70
	Moai, Targa	Cromado / Chromed	**AG0068500R**	27,30



Soporte fijo / Fixed support

			€
Para ducha teléfono / For handheld shower	Cromado / Chromed	**A526704010**	13,30

		€
A505318200	Ducha teléfono Atai bri / Handshower Atai shiny	89,30
A505318221	Ducha teléfono Atai mat / Handshower atai opaque	89,30
A505322700	Ducheta zoom grif cocina / Handshower	193,00
A505324300	Ducheta cocina mini zoom / Mini-zoom kit. sink showerhead	195,00
A505712416	Soporte pared Florentina oro / Support wall Florentina gold	96,00
A505715600	Soporte ducha / Support shower	5,23
A507157000	Soporte ducha Kendo brillo / Wall bracket cap for Kendo	46,80
A523455300	Soporte pared barra desl cro / Support wall slide bar chrome	11,10
A525000700	Kit codo para ducha / Kit elbow for shower	9,16
A525001900	Recamb codo Conic duch telef / Kit elbow tapered handshower	10,10
A52530110B	Ducha cima bla / Cima (d4) handset,(x)	10,20
A525302000	Ducha telef manual sol cr / Handshower manual sol chrome	64,70
A52538900B	Rociador c/brazo sun (te) bl / Shower head for duet	208,00
A525394000	Terminal dch lavavaj. / Shower terminal dishwaher	67,20
A525759100	Soporte rotat fij ducha cro / Fixed head support chrome	16,90
A525759500	Kit soporte barra desliz cro / Hand set holder ts slide bar chrome	33,30

		€
A525773000	Soporte deslizante barra minimal 600 / Slide mount minimal 600	53,00
A525773100	Soporte deslizante barra minimal 900 / Slide mount minimal 900	53,00
A525832107	Jabonera barra deslizante / Clear soap dish	35,10
A526312010	Brazo ducha c/ roc fijo cro / Shower arm	66,40
A526313800	Caño p/bañera c/ducha cr / Spout for bathtub with shower chrome	41,50
A52631391B	Kit ducha Aruba bla / Aruba shower set, wht	167,00
A526318410	Ducha Aruba-n cr+ sop+ fl / Shower aruba-n crh+ support+ flex hose	211,00
A52670391B	Kit soporte rotat fij ducha bla / Adjustable wall brackt white	20,30
A52670401B	S/i soporte bj dch telef bla / Fixed support lower handshower white	10,70
A527005410	Juego torn.fija barra desli / Set fastening screws slide bar	2,48
A5B1031B00	Ducha tel m Sunami bl aq/ar / Handshower massage sunami white aq/ar	110,00
A5B1031C00	Ducha telf Sunami aqk cr / Handshower Sunami aqk chrome	-
A5B1031CM0	Ducha telef m Sunami cr / Aquakit hotel shower head	111,00
A5B1331BC0	Ducha Sunami mp sop flex blc / Sh. Sunami massage plus support flex wh	156,00
A5B1103C00	Ducha teléfono Basic / Handshower 80 3f	-
A5B2001C00	Ducha teléfono / Handshower	-

Duchas, rociadores y barras
Showers, shower heads & bars

		€
A5B3131B00	Ducha telef Sunami tplus bla / Handshower Sunami tplus white	95,50
A5B3331B00	Ducha Sunami tp sop flex bla / Shower Sunami turbo plus support flex wh	148,00
A5B6034C00	Ducha teléfono (cromado) / Handshower (chromed)	-
A5B8031C00	Ducha manual Sunami / Manual handshower Sunami	-
A5R0104C01	Cto. Element. Fij. Barra minimal 600 / Fixing set slide bar minimal 600	33,20
A5R0204C01	Cto elemt.Fijac.Barra minimal 900 / Sistema fijacion barra minimal 900	60,90
A5R0204C02	Barra minimal 900mm / Minimal bar 900mm	68,80
A5R9250C01	Rótula vintage / Swivel vintage	56,80

		€
A5R9250C08	Regulador vintage / Vintage regulator	8,95
AG0012600R	Ducha manual caudal fijo Oval (cromado) / Handshower fixed flow Oval (chromed)	200,00
AG0031500R	Ducha para bidé / Bidet shower	18,80
AG0083600R	Soporte deslizante barra 600 mm / Sliding support bar 600 mm	17,20
AG0084507R	Tetilla rociador vintage ø400 mm (20 un) / Vintage shower teats ø400mm (20 un)	29,60
AG0204900R	Ducha manual New Sunami / Manual shower New Sunami	-
AG0227600R	Rociador superior ø300 mm / Showerhead ø300 mm	-
AG0228100R	Soporte ducha columna / Support shower column	39,10

Embellecedores, rosetones y caperuzas
Trimplates, rosettes & caps

Esmai, Moai-T, Targa-T

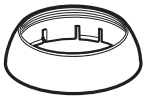

Frontalis

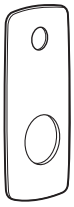

Victoria-N, Bide, Monodin-N, Vectra



Monodin-N, Targa, Vectra, Victoria-N



		€
A501810300	Rosetón llave Florentina / Stopcock wall plate Florentina	21,20
A502812116	Base lv-bd Florentina oro / Base basin-bide Florentina gold	23,90
A502812800	Base lv caño alto Atai bri / Atai extension column only	109,00
A502812821	Base lv caño alto Atai mat / Base basin spout tall atai opaque	109,00
A502814700	Caperuza mezcl. Cocina zoom / Cap plate mixer kitchen Zoom	24,50
A504811600	Cto enlace maneta Loft / Set handle connector Loft	151,00
A504831007	Tapón embell. Mezcl. Cocina / Plug trim plate mixer kitchen	3,75
A52181250T	Caperuza dmtr53.5X43 / Cap plate dmtr53.5x43	79,70
A522823200	Rosetón pared dmtro 80 / Wall plate dmtr 80	6,48
A523810500	Caperuza m3 cromado / Cap plate m3 chrome	2,57
A52381090B	Caperuza 52 bla / Cap plate 52 white	2,24
A52381110B	Caperuza de dmtr47 / Cap plate dmtr 47	3,11
A523812307	Roseton grad dial temp emp / Temperatur dial wall plate b-in	2,96
A523813400	Caperuza dmtr.40 / Cap plate dmtr 40	3,35
A523880600	Embellecedor barra desliz / Slide bar trim plate	2,15
A524811200	Rosetón pared Panama t cro / Panama-t cp wall plate	57,10
A52481120B	Rosetón pared Panama t bla / Wall plate panama-t white	73,60
A524811300	Rosetón pared Panama t cro / Panama-t chrome fascia	46,30
A52481130B	Rosetón pared Panama t bla / Wall plate panama-t white	53,50
A524814900	Kit roseton thesis / Wall plate kit thesis	426,00
A525006800	Caperuza dmtr 46x41 / Kit body bush cartridge ø46x41	20,50
A525020900	Kit cromados Touch / Kit chrome touch	179,00
A525087500	Recamb Rosetón emp dc pnm-t / Kit wall plate built-in shower pnm-t	208,00
A525091200	Recamb caperuza Monodin cro / Kit cap plate Monodin chrome	2,21
A525091300	Recamb caperuza Victoria cro / Kit cap plate Victoria chrome	3,75
A525091400	Recambio caperuza m2 cro / Kit cap plate m2 chrome	2,67
AG0172100R	Kit roseton pared ducha / Kit shower wall cover	16,50
A54281260B	Rosetón bl d60x15 c/orif d27 / Wall plate white d60x15 with d27 orifice	15,90
A542814800	Rosetón d.60 Dmtr60xm32 / Wall plate d.60 dmtr60xm32(ag0064200r)	69,30
A54281500B	Caperuza mezcl empotrar bla / Cap plate mixer built-in white	48,70
A542816000	Rosetón dmtro 98 / Wall plate dmtr 98	24,70

		€
AG0018700R	Kit 10 caperuzas 523813200 / Kit 10 cap plates 523813200	9,87
AG0018800R	Kit 10 caperuzas 523813300 / Kit 10 cap plates 523813300	12,30
AG0020500R	Kit base columna Verona / Verona column base kit	103,00
AG0023800R	Kit embellecedor maneta m2 / kit handle cover m2	8,95
AG0040000R	Kit embellecedor emp. Thesis-t / Kit trim plate built-in Thesis-t	8,20
AG0056603R	Kit base postizo touch / Kit faucet base touch	18,30
AG0085300R	Caperuza dmtr 46x32 / Kit hoods d44 bs+d46x32 bd	18,00
AG0086000R	Kit rosetón empotrar Barcelona / Kit build-in ceiling rose Barcelona	22,90
AG0087000R	Kit rosetón pared rociador gc / Kit ceiling rose wall s.h. hf	11,60
AG0093600R	Kit rosetón pulsador Sprint plus / Kit push button rosette sprint plus	82,10
AG0096900R	Rosetón embellecedor / Kit rossette built-in bs 1000-t	28,50
AG0121200R	Kit roseton pared rocabox cro / Kit trim plate ø160 sh. built-in rocabox	19,90
AG01212CNR	Kit roseton pared rocabox tit / Kit t.pl.ø160 sh. built-in rocabox black	25,50
AG01212NMR	Kit roseton pared rocabox tit cep / Kit tr.pl. ø160 shower built-in rocabox	31,80
AG01212RGR	Kit roseton pared rocabox ros / Kit tr.pl.ø160 sh. built-in rocabox	24,20
AG0137200R	Kit roseton con junta 180x80 cro / Kit rossette 180x80 w/seal	23,30
AG01372CNR	Kit roseton con junta 180x80 tit / Kit rossette 180x80	90,50
AG01372NMR	Kit roseton con junta 180x80 tit cep / Kit rossette 180x80 n.t.c	98,90
AG01372RGR	Kit roseton con junta 180x80 ros / Kit rossette 180x80 o.r	91,40
AG0157900R	Kit embellecedor cartucho cro / Kit cartridge cap	9,02
AG01579B0R	Kit embellecedor cartucho bla / Kit cartridge cap	17,10
AG01579CMR	Kit embellecedor cartucho mat / Kit cartridge cap	10,90
AG01579CNR	Kit embellecedor cartucho tit / Kit cartridge cap	11,50
AG0177400R	Kit rosetón pared / Kit assembly wall cover 2w.square v&d	24,20
AG0186000R	Kit roseton pared term cro / Kit rosette shower bd term. 160x180	95,80
AG01860CNR	Kit roseton pared term tit / Kit rosette shower sh-b	98,30
AG0194600R	Roseton con junta dmtr 120 / Rossette with joint dmtr 120	-
AG0200800R	Rosetón caño element / kit rosette spout element	99,60
AG0201400R	Base cruceta plana / Flat crosshead base	-
AG0222200R	Kit roseton pared 120x160 / Kit rosette assy. wall s-b alfa	64,10

Manecillas accionamiento monomandos
Single-lever handles



Amura-N

		€
	AG0078900R	51,80

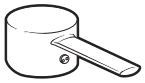

Targa

		€
Cromado / Chromed	**AG0001200R**	27,10



Vectra

		€
Cromado / Chromed	**AG0002000R**	13,80



Touch

		€
Cromado / Chromed	**A525840700**	66,40



Moai

		€
Cromado / Chromed	**A525024900**	15,90



Atai

		€
Mate / Matt	**AG005840ER**	71,10



Modena

		€
	AG0009000R	121,00



Amura

		€
Cromado / Chromed	**A525081700**	45,20



Silver Crown

		€
Cromado / Chromed	**A525083500**	67,30



M2

		€
Cromado / Chromed	**A525081900**	63,30
Dorado londur / Londur gold	**A52583600P**	175,00
Blanco / White	**A52583600B**	82,40

Manecillas accionamiento monomandos
Single-lever handles



Silver Shadow

			€
	Cromado / Chromed	**A525083300**	43,70



Esmai

			€
	Cromado / Chromed	**A525029600**	22,60

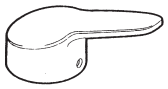

Monodin

			€
	Cromado / Chromed	**A525082700**	48,70
	Mate / Matt	**A52583610B**	62,50



Victoria Plus

			€
		A525082900	38,50

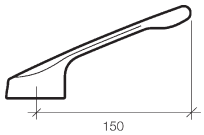

Para todas las griferías / For all faucets

			€
		A525836400	76,30



Monodin Top

			€
	Cromado / Chromed	**A525083200**	49,60
	Mate / Matt	**A52583770B**	63,90



Monojet

			€
		A525082600	44,80



Thesis

			€
	Cromado / Chromed	**A525022600**	32,90



Logica-N

			€
	Cromado / Chromed	**A525082300**	54,80
	Dorado londur / Londur gold	**A52583550P**	148,00
	Blanco / White	**A52583550B**	71,20

Manecillas accionamiento monomandos
Single-lever handles

		€
A501531100	**Maneta mezcl. Cocina zoom /** Mixer handle kitchen zoom	57,30
A502623119	**Prisionero maneta mez cocina /** Mixer handle stud kitchen	2,48
A504521007	**Maneta completa mez emp /** Complete mixer handle built-in	97,50
A521531500	**Maneta transfusor /** Diverter valve handle	37,30
A52153280B	**Maneta m2 blanco /** Handle m2 white	74,50
A52153280D	**Maneta m2 dorado /** Handle m2 gold	155,00
A521533200	**Maneta especial Logica cro /** Logica b/filler lever hnd cp	33,60
A522341600	**Maneta antivandalica /** Vandal resistant handle	13,60
A523530600	**Maneta Victoria-N cro /** Handle cp (Victoria-N)	26,40
A525017400	**Kit maneta caudal Victoria T /** Kit flow Handle Victoria T	12,80
A525081700	**Recambio maneta Amura cro /** Kit handle Amura chrome	45,20
A525082700	**Recambio maneta Monodin cro /** Kit handle Monodin chrome	48,70
A525083400	**Recambio maneta Spirit cro /** Kit handle Spirit chrome	43,70
A525085303	**Caja 3 manetas madera Atai /** Box 3 wooden handles Atai	130,00
A525093907	**Kit adapt maneta monom (12u.) /** Kit handle adapter monom	5,39
A525094807	**Kit adapt maneta monoman (12unid) /** Kit handle adapter monoman	13,20
A525800230	**Maneta m3 blanco /** Handle m3 white	77,30
A525825130	**Maneta m2 bla /** Handle m2 white	73,70
A525825140	**Maneta m2 edw /** Handle m2 edw	80,30
A52583320B	**Maneta Monodin bla /** Handle monodin white	62,50
A525833236	**Maneta Monodin grp /** Handle monodin	67,30
A525833240	**Maneta Monodin edw /** Handle monodin edw	67,30
A52583550B	**Maneta Logica bla /** Handle logica white	71,20
A52583550P	**Maneta Logica dor /** Handle logica gold	148,00
A52583600B	**Maneta m2 bla /** Handle m2 white	82,40
A52583600P	**Maneta m2 dor /** Handle m2 gold	175,00
A52583610B	**Maneta Monodin bla /** Handle monodin white	62,50
A525836400	**Manecilla geront monomando /** Handle single lever geront	76,30
A52583770B	**Maneta Monodin top bla /** Handle monodin top white	63,90

		€
A525840700	**Kit maneta y caperuza Touch /** Touch repl cp handle	66,40
A525841500	**Maneta /** Handle	31,70
A5R0134E03	**Maneta mezcl. B-d Atai mate /** Mixer handle bathroom-shower atai opaque	15,20
AG0110100R	**Kit maneta fregadero Amura-N /** Kit handle sink Amura-N	16,80
AG0121400R	**Conjunto maneta dtro 48 Lanta-N /** Kit handle Lanta	61,80
AG0126900R	**Kit maneta Ø47 Naia /** Poignée kit Ø47 Naia	19,40
AG01269CNR	**Kit maneta Ø47 Naia tit cep /** Kit handle naia ø47	51,80
AG01269NMR	**Kit maneta Ø47 Naia tit /** Kit handle Naia ø47	48,50
AG01269RGR	**Kit maneta Ø47 Naia ros /** Kit handle Naia ø47	39,70
AG0136500R	**Kit maneta coldstart Naia /** kit handle coldstart Naia	9,53
AG01365CNR	**Kit maneta coldstart Naia tit cep /** Kit handle coldstart Naia	47,00
AG01365NMR	**Kit maneta coldstart Naia tit /** Kit handle coldstart Naia	48,50
AG01365RGR	**Kit maneta coldstart Naia ros /** Kit handle coldstart Naia	48,50
AG0154200R	**Kit maneta Ø47 Insignia /** Kit handle ø47 Insignia	13,20
AG01542CNR	**Kit maneta Ø47 Insignia tit cep /** Kit handle ø47 set 300 Insignia	48,00
AG01542NMR	**Kit maneta Ø47 Insignia tit /** Kit handle ø47 set 300 Insignia n.t.c	45,00
AG01542RGR	**Kit maneta Ø47 Insignia ros /** Kit handle ø47 set 300 Insignia o.r	39,10
AG0205100R	**Conjunto maneta dtro 43 /** Handle assembly Ø43	-
AG0205200R	**Tapón para maneta dtro 6'5 x 5'1 /** Cap for lever handle Ø6.5 x 5.1	-
AG0209900R	**Conjunto manetas /** Handle set	-
AG0213200R	**Maneta y varilla roscada /** Kit handle kitchen	15,00
AG0213600R	**Kit manecilla mid-high /** Mid-high handle kit	-
AG0222000R	**Kit maneta coldstart Alfa /** Kit handle coldstart Alfa	39,60
AG0223500R	**Kit maneta Ø39 mezclador Cala /** Kit handle ø39 mixer Cala	15,50
AG0223900R	**Conjunto maneta dtro 42 Cala /** Handle set dtro 42 Cala	21,50
AG0224500R	**Conjunto maneta dtro 44 Cala /** Handle set dtro 44 Cala	24,60
AG0227900R	**Kit maneta joystick columna Pals /** Kit handle joystick column Pals	47,40

Crucetas
Crossheads

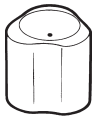

Brava

			€
Cruceta / Crosshead	Índice F (frío) / Index F (cold)	**AG0075100R**	18,30
	Índice C (caliente) / Index C (hot)	**AG0075000R**	18,30

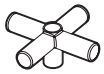

Loft

		€
Cruceta / Crosshead	**AG0061600R**	51,20

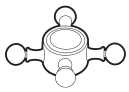

Verona

			€
Cruceta / Crosshead	Cromado / Chromed	**AG0051700R**	78,80

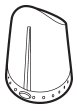

Amura-T

		€
Cruceta de temperatura / Temperature cosshead	**A525092400**	16,10



Moai

		€
Cruceta de temperatura / Temperature cosshead	**AG0026600R**	37,70
	AG0026500R	37,70

Panama-T

			€
Cruceta (cartucho metálico) / Cosshead (metallic cartridge)	Cromado / Chromed	**A525096300**	33,20

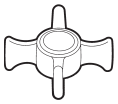

Florentina

		€
Cruceta / Crosshead	**AG0046300R**	72,70

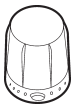

Prada-T

			€
Cruceta de temperatura / Temperature cosshead	Cromado / Chromed	**A525092300**	15,50

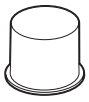

Atai

			€
Cruceta mezclador lavabo / Basin mixer cosshead	Brillante / Bright	**AG0060700R**	157,00
	Mate / Matt	**AG006070ER**	161,00

Crucetas
Crossheads

		€
A501520800	Cruceta cuatro aspas / Crosshead stopcock Loft	36,10
A5015210TE	Cruceta caud Atai ma c/bot i / Flow faucet handle atai opaq w/button i	130,00
A50152110A	Cruceta termostat Atai bri / Handle cp (Atai-t column)	77,90
A50152110E	Cruceta termostat Atai mat / Thermostatic faucet handle atai mat	77,90
A5015212A0	Cruceta termostatica Kendo / Thermostatic faucet kendo	177,00
A5015212E0	Cruceta termostatica Kendo / Thermostatic faucet kendo	177,00
A5015213A0	Cruceta caudal Kendo-T / Faucet flow handle kendo	145,00
A5015213E0	Maneta mate s.Kendo-T / Handle mate kendo	144,00
A504810800	Cruc temp+roset+casqu Loft-T / Temp. faucet+wall plate+sleeve Loft-t	91,50
A505000607	Mando indicador temperatura / Aquakit iris temp dial	40,10
A52152450B	Cruceta Panama bld / Faucet handle panama white	43,70
A521524700	Cruceta circ d47x38 cr comb / Round faucet handle d47x38 chrome	11,30
A52152470B	Cruceta circ d47x38 bl comb / Round faucet handle d47x38 white	11,80
A52152510B	Cruceta circ d47x43'7 / Control head for duet	37,60
A52152520B	Cruceta Panama-T bld / Faucet handle panama-t white	34,50
A521525400	Cruceta circ d47x43,7 cr mar / Aquakit iris crosspiece	25,50
A52152540B	Cruceta circ d47x43,7 bl mar / Round faucet handle d47x43.7 white	33,10
A524525100	Cruceta inversor bide cro / Diverter faucet handle bidet chrome	10,40
A525000207	Recamb cruceta ind azul opal / Kit faucet handle indicator blue opal	16,90
A525000307	Recamb cruceta ind rojo opal / Kit faucet handle indicator red opal	16,90
A525000400	Recambio cruceta serie dial / Kit faucet handle dial range	27,90
A525016900	Kit mando desviador Victoria-T / Kit diverter handle Victoria-T	18,00
A525017003	Recambio tope 48° / 48°c stop bracket	42,70

		€
A525055103	Kit tornillos fij cruceta (12u.) / Headwork screws	9,16
A525059100	Recambio cruceta Enea / Kit faucet handle Enea	34,30
A525071100	Recambio cruceta serie 2-v / Kit faucet handle 2-v series	41,60
A525083107	Recambio freno cruc orq-aloa / Recambio freno cruc orq-aloa	8,24
A525092300	Kit cruceta Prada-T / Prada-T repl handle	15,50
A525092400	Recamb cruceta Amura-T cro / Handle t/s Amura-T w/m	16,10
A525096300	Recamb cruceta Panama-T cro / Chrome control knob	33,20
A52509650E	Recamb cruceta Panama-T bld / Kit faucet handle Panama-T white	60,10
A525097800	Recambio cruceta turbo / Kit faucet handle turbo	49,10
A525098000	Recamb cruceta c Brava plus / Kit faucet handle c Brava plus	11,80
A52509840C	Recamb cruceta c Panama crd / Kit faucet handle hot panama chrome	41,50
A52509850E	Recamb cruceta f Panama bld / Kit faucet handle cold Panama white	53,20
A52509860E	Recamb cruceta c Panama bld / Kit faucet handle hot Panama white	53,20
A525099300	Recambio cruceta f reto / Kit faucet handle cold reto	27,70
A525099400	Recambio cruceta c reto / Kit faucet handle hotreto	27,70
AC0023700R	Cruceta mando termostato rojo / Kit therm crosshead aqk/neos ii/iii	37,00
AG0089300R	Kit crucetas Amura-T emp / Kit crosshead amura-t build-in	53,30
AG0132300R	Cruceta series varias / Kit cros. set ther. 1000-T, Deck-T, Even-T	110,00
AG01323CNR		179,00
AG0186200R	Kit crucetas Insignia-T / Kit crosshead Insignia-T (1 un)	22,70
AG01862CNR	Kit cruceta Insignia-T negro / Kit croshead Insignia-T black (1 un)	41,10
AG0200900R	Cruceta flat emp / Crosshead flat in-wall	-
AG0202000R	Cruceta flat / Crosshead flat	-

Índices / Indexs

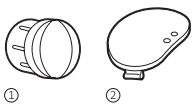

① ②

			€
	A504830600	Índice c/anillo Loft-T / Ringed indicator Loft-T	10,80
	A525092507	Índice f/c Florent / Verona / Indicator cold/hot Florent - Verona	12,60
①	**AG0076807R**	Índice bicolor (3 un) / Bicolor index (3 un)	5,30
	AG0077900R	Índices f/c Loft / Index h/c Loft	9,17
②	**AG0082200R**	Índice Monojet cr (3 un) / Index Monojet cr (3 un)	11,50
	AG0099807R	Índice Dial rojo/azul / Dial index red/blue	18,60
	AG0285700R	Índices cold start (3 un gris) / Cold start index (3 un grey)	1,80

Monturas
Headworks

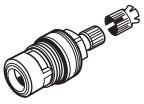

Para todas las series de grifería bimando cerámicas
For all twin-handle faucet series

		€
Monturas cerámica de 1/2 vuelta (2 un) / Ceramic mounts 1/2 turn (2 un)	**A525092709**	73,20

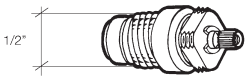

Fucsia, Eolia y Cosmia

		€
Monturas (2 un) / Ceramic mounts (2 un)	**A525080109**	24,40

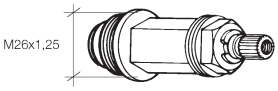

Orquidea y Aloa

		€
Monturas para llave de paso de 1/2" (2 un) / Mounts for 1/2" stopcock (2 un)	**A525009103**	54,70

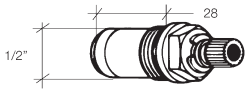

Orquidea y Aloa

		€
Monturas para grifería lavabo y bidé (2 un) / Mounts for taps sink and bidet (2 un)	**A525011103**	39,70

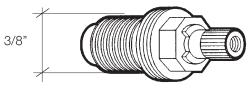

Fucsia, Vanesa y Univ-80

		€
Monturas para grifería lavabo y bidé (2 un) / Mounts for taps sink and bidet (2 un)	**A525008103**	37,60

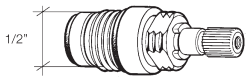

Enea, Aloa-N, Dial, Opal, Record, Reto y Brava

		€
Monturas (2 un) / Ceramic mounts (2 un)	**A525098108**	24,40

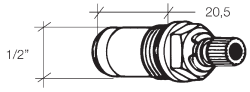

Orquidea y Aloa

		€
Monturas para mezclador de baño (2 un) / Mounts for bath mixer (2 un)	**A525068109**	55,10

		€
A505120700	Montura llave de paso Loft-T / Headwork stopcock Loft-T	37,10
A525008103	Mecanismo válvula R3/8" (2 un) / Kit universal valve mechanism (un)	37,60
A525009103	Válvula llave de paso 1/2" orq. (2 un) / Kit valve stopcock 1-2 orq	54,70
A525011103	Mecanismo válvula bidé 1/2" (2 un) / Kit valve bidet monoblock (2 un)	39,70
A525015408	Montura 1/2" 1v 180 / Kit headwork 1/2" 1v 180	61,70
A525035107	Anillo 6,07 x 9,63 x 1,78 / Kit ring 6.07x9.63x1.78	10,80
A525068109	Montura mezclador bañera Aloa, Orquidea (2 un) / Kit headwork mixer bath (2 un)	55,10

		€
A525069109	Mecanismo válvula Fucsia / Kit valve mechanism fucsia	23,60
A525080109	Montura válvula 1/2" / Kit headwork 1-2	24,40
A525100100	Montura transfusor de empotrar 1/2" / Build-in transfer headwork 1-2	110,00
A525102103	Montura válvula R 1/2" / Valve headwork r 1-2"	20,70
AG0043603R	Montura 3/4" / Kit headwork 3/4"	64,40
AG0077009R	Monturas cerámica 3/4" 1V 90 / Bth/fil cartridge hot	65,90
AG0105800R	Montura 1/2" sin cuerpo (2 un) / Kit headwork 1/2" n/body (2u)	61,70

Cartuchos
Cartridges

Monomando / Single-lever



				€
R-37 T	Logica-N, Vectra, Victoria-N, Esmai, M2-N, L90, Targa, Monodin, Frontalis, Thesis	**AG0053707R**	incluye llave / includes key	39,20
		AG0077807R	incluye llave y 2 tuercas / includes key and 2 nuts	42,10
		AG0019007R	10 unidades / 10 units	303,00
		AG0109807R	modelos NF C2 / models NF C2	19,90
R-44	Modena, Moai, Amura, Touch, Monojet, Silver Shadow, Silver Crown, M2, Logica, Monodin Top, Victoria Plus	**A525081303**	R-44 Plus, incluye llave y 2 tuercas / R-44 Plus, includes key and 2 nuts	49,90
	Modelos Star: Monojet-N, Lógica, M2, Monodin Top	**A525081403**	Star	57,10
		A525098703	R44-E	49,90
R-35 Plus		**AG0056707R**		35,70
R-33 O	Moai, L90, M2-N, Logica-N, Esmai, Targa, L20, Thesis	**AG0141207R**	incluye tuerca / includes nut	19,20
	Thesis	**A525022907**	limitado 6l/min / limited 6l/min	20,80
R-33 MFH		**AG0200700R**	incluye llave y 2 tuercas / includes key and 2 nuts	19,40
R-330 MF		**AG0210700R**		19,60
Conj. Cart. Joystick Ø25+Camisa / Joystick cartridge Ø25 set		**AG0216200R**		149,00
R-33 MFH		**AG0159300R**		12,50
R-33 MA		**AG0200600R**		17,40

Termostático / Thermostatic



				€
RT-12	L90, T-1000, Victoria-T (T-500)	**A525015803**	incluye tuerca / includes nut	78,50
RT-11	Columnas: Fresh, Transtube	**A2R0096000**		71,70
RT-10	Prada-T, Monodin Top-T, Moai-T, Touch-T, Silver Shadow-T, Puzzle	**A525028003**		81,70
RT-9 (CP7)	Panama-T	**AG0054403R**		143,00
RT-8	Panama-T (antigua) / (old)	**A505905103**		336,00
RT-7	Mezcladores antiguos / old mixers	**A505907809**		309,00
R-TM1	Prada-T (antigua) / (old)	**AG0028503R**		209,00
	Loft-T	**A505909803**		101,00
RT-12	+ tuercas / + nuts	**AG0197500R**		63,90

Llaves cartuchos / Cartridge key

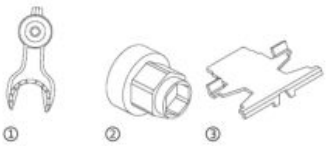

			€
②	**AG0018907R**	(25 un)	26,50
①②	**A525005407**	plásticas / plastic	7,44
③	**A525022503**	metálicas / metallic	46,50

Inversores y desviadores
Inverters & diverters

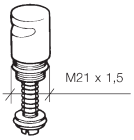

M3 y Panama-T

		€
Inversor automático para baño-ducha / Automatic diverter for bath-shower	**A525097200**	33,60

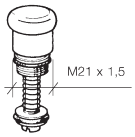

M2, 2V, Dial, Monojet y Reto

		€
Inversor automático para baño-ducha / Automatic diverter for bath-shower	**A525000100**	28,30

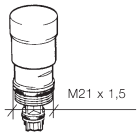

Monodin, Cuatro, Victoria, Victoria Plus, Brava, Record y Medio

		€
Inversor manual para baño-ducha / Manual diverter for bath-shower	**A525002600**	18,10

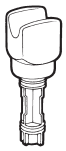

Cosmia y Eolia

		€
Inversor manual para baño-ducha / Manual diverter for bath-shower	**A525093107**	9,16



Florentina y Verona

		€
Inversor para baño-ducha / Diverter for bath-shower	**AG0057700R**	130,00

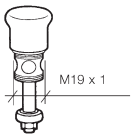

M2

		€
Inversor automático para baño-ducha / Automatic diverter for bath-shower	**A525001500**	41,50



Amura, y versiones anteriores / previous versions, M2, Logica, Monojet, Monodin, Panama, Medio, Victoria, Victoria Plus y Brava

		€
Inversor automático (sin retención) para baño-ducha / Automatic inverter (without retention) for bath-shower	**A525080509**	18,40



Para todas las series / For all series

		€
Inversor automático con retención para baño-ducha / Automatic diverter with retention for bath-shower	**A525087300**	18,90

Inversores y desviadores
Inverters & diverters



Amura

		€
Pomo inversor para baño-ducha / Inverter knob for bath-shower	**A525093600**	10,30



M2 y Logica

		€
Pomo inversor para baño-ducha / Inverter knob for bath-shower	**A525094300**	10,70



Monojet, M2, Panama, Monodin Aut., Reto, Medio, Victoria, Victoria Plus y Brava

		€
Pomo inversor para baño-ducha / Diverter knob for bath-shower	**A525094400**	9,53



Monodin y Cuatro

		€
Pomo inversor para baño-ducha / Diverter knob for bath-shower	**A525094500**	9,53



Monojet-N

		€
Pomo inversor baño-ducha / Bath-shower diverter knob	**AG0053600R**	7,00



M2-N, Logica-N, Brava y Gante

		€
Pomo inversor (con retención) para Brava / Reversing knob (with retention) for Brava	**AG0053600R**	7,00



Touch y Targa

		€
Pomo inversor / Reversing knob	**A525023200**	11,90

Inversores y desviadores
Inverters & diverters

		€
A502632200	**Tuerca mecanismo inversor Loft-T /** Diverter mechanism nut Loft-T	7,12
A504311103	**Enlace con desviador /** Connector with diverter	62,70
A504540216	**Pomo completo inversor baño Modena (oro) /** Button access. diverter bath Modena (gold)	33,10
A505002021	**Inversor mezclador baño Atai (mate) /** Diverter mixer bathroom Atai (matt)	36,90
A505121407	**Desviador Kendo /** Diverter & flow control	47,20
A505123107	**Mecanismo inversor Loft-T /** Diverter mechanism Loft-T	95,70
A522317503	**Asiento válvula M15 /** Valve seat M15	3,87
A52354200B	**Pomo tirador inversor baño (blanco) /** Pull knob diverter bath (white)	10,20
A523542500	**Pulsador transfusor Thesis /** Diverter knob Thesis	3,87
A524176303	**Cuerpo desviador /** Diverter assembly	169,00
A525000100	**Mecanismo transfusor con tirador Dial /** Diverter valve mechanism bath M2	28,30
A525001500	**Inversor automático baño M2 /** Automatic diverter bathroom M2	41,50
A525002600	**Inversor baño-ducha Monodin /** Diverter b-s Monodin	18,10
A525091100	**Mecanismo transfusor baño-ducha Enea /** Diverter valve mechanism bath-shower Enea	25,90
A525093107	**Porta válvulas baño-ducha /** Diverter bath-shower	9,16
A525093600	**Pomo inversor Amura (cromado) /** Diverter button Amura (chromed)	10,30
A525094300	**Pomo inversor baño /** Diverter knob bath	10,70
A525094400	**Pomo inversor baño /** Diverter knob bath	9,53
A525094500	**Pomo inversor baño /** Diverter knob bath	9,53
A525095607	**Asiento inversor baño (6 un) /** Diverter seat bath (6 un)	12,80
A525095700	**Asiento inversor baño /** Diverter seat bath	32,50
A525097200	**Inversor M3 /** Diverter M3	33,60
A52515510B	**Mecanismo transfusor baño (blanco) /** Diverter valve mechanism bath (white)	56,40
A525158309	**Inversor manual baño-ducha /** Manual diverter bath-shower	12,30
A525158607	**Mecanismo transfusor automático /** Automatic diverter valve mechanism	4,27

		€
A525159903	**Inversor baño repisa /** Diverter bath deck-mounted	11,20
A525838400	**Transfusor monomando /** Diverter valve thermostatic	265,00
AG0031600R	**Pulsador válvula bidé /** Bidet valve push button	32,00
AG0053500R	**Pomo tirador inversor M5 /** Knob handle diverter M5	11,40
AG0053600R	**Pomo tirador inversor 28 M6 /** Pull knob diverter 28 M6	7,00
AG0053800R	**Inversor baño-ducha+asiento Monodin /** Diverter bath-shower+seat Monodin	10,80
AG0054200R	**Pomo tirador inversor M10 Monodin /** Knob handle diverter M10 Monodin	10,60
AG0054507R	**Asiento inversor baño (2 un) /** Bath diverter seat (2 un)	7,94
AG0114100R	**Montura inversor 1/2" Loft /** Diverter frame emp 1/2" Loft	116,00
AG0131300R	**Toma alimentación /** Inlet f/therm. mixer	43,80
AG0211300R	**Tope temperatura /** Temperature stop & click	64,40
AG02129CNR	**Inversor pulsante (negro titanio) /** Pulsing diverter (titanium black)	32,30
AG02129NMR	**Inversor pulsante (negro cepillado) /** Pulsing diverter (brushed black)	33,20
AG02129RGR	**Inversor pulsante (oro rosado) /** Pulsing diverter (rose gold)	29,10
AG02130CNR	**Caperuza para transfusor (negro titanio) /** Boot reductor (titanium black)	15,00
AG02130NMR	**Caperuza para transfusor (negro cepillado) /** Boot reductor (brushed black)	18,80
AG02130RGR	**Caperuza para transfusor (oro rosado) /** Boot reductor (rose gold)	13,50
AG0218500R	**Desviador 3 vías Even-M /** Column diverter 3 way Even-M	15,90
AG02188CNR	**Mecanismo transfusor (negro titanio) /** Diverter valve mechanism (titanium black)	26,40
AG02188NMR	**Mecanismo transfusor (negro cepillado) /** Diverter valve mechanism (brushed black)	101,00
AG02188RGR	**Mecanismo transfusor (oro rosado) /** Diverter valve mechanism (rose gold)	94,70
AG0219200R	**Separador /** Body diverter separator	42,00
AG0220000R	**Desviador 65 /** Diverter 65	45,80
AG0227200R	**Desviador columna 3 vías /** Column diverter 3 way	170,00

Flexibles de alimentación y ducha
Flexible and shower hoses

Tubos flexibles alimentación / Feeding flexible hoses

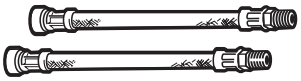

Métrica	Long (mm)			€
1/2" x 1/2"	L450	**A289424000**		14,20
M8 x 1	420	**AG0213700R**		22,70
M10 x 3/8"	450	**AG0219600R**		11,30
1/2" x 1/2"	90	**AD0005809R**	acodado / with elbow	25,20
	300	**AG0096009R**		9,55
1/2" x 3/8"	L460	**A525700609**		11,40
1/2" x 9/16-24	300	**AG0015709R**		19,90
1/2" x M15	350	**A525765709**		12,50
	600	**A525763409**		19,50
D10 x 1/2"	470	**AG0126009R**		17,00
	600	**AG0125909R**		18,30
D10 x 3/8"	470	**AG0096409R**		13,90
	600	**AG0096509R**		16,40
M10 x 1/2"	470	**AG0092409R**		8,86
M10 x 3/8"	290	**A525020509**		13,20
	365	**AG0009209R**		17,70
	400	**AG0061409R**		31,90
	470	**A525020309**		15,00
	600	**A525020409**		18,60
M10 x 9/16-24	365	**AG0015509R**		18,30
	400	**AG0015609R**		22,10
	450	**AG0015309R**		21,50
	470	**AG0015409R**		22,10
	600	**AG0015209R**		25,60
M10 x M15	350	**AG0009709R**		9,39
M12 x 1/2"	370	**AG0048509R**		17,40
	500	**AG0165000R**		21,70
M12 x 3/8"	290	**AG0010603R**	incluye racord / includes fitting	47,00
	420	**A525008009**		17,60
M15 x 1/2"	300	**A525765409**	acodado / with elbow	16,10
M8 x 1/2"	450	**AG0103808R**		2,05
M8 x 3/8"	420	**AG0010909R**		9,17
	600	**AG0008009R**		10,60
M8 x M15	350	**AG0109709R**		8,77

Tubos flexibles ducha / Shower flexible hoses

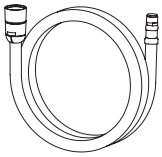

	Métrica	Long (mm)			€
M12 x 1		1500		**AG0214000R**	54,70
1/2" x 1/2"	Cónico-recto	500	Cromado / Chromed	**AG0084000R**	22,00
		1200	Cromado / Chromed	**AG0139400R**	12,60
		1700	Pvc cromado / PVC Chromed	**AG0068800R**	49,20
			Pvc blanco / PVC white	**AG006880BR**	49,20
			Pvc dorado / PVC Gold	**A52575930P**	45,60
			Cromado / Chromed	**A525009800**	27,10
	Cónico-cónico	1200	Cromado / Chromed	**A525768500**	25,30
		1700	Pvc liso brillo / PVC smooth bright	**A525009900**	52,60
	Recto-recto	1500	Cromado / Chromed	**A505702100**	28,50
		2000	Cromado / Chromed	**AG0056500R**	40,80
1/2" x M15	Recto	400	Cromado / Chromed	**A525767500**	25,60
		600	Cromado / Chromed	**A525767400**	25,60
1/2" x M12	Cónico	1500	Cromado / Chromed	**AG0082000R**	90,50

Medidas en mm

Aireadores, rompechorros y limitadores
Aerators, flow straightners & limiters

Aireadores / Aerators



				€
M24	Clase Z		**AG0055100R**	23,50
	5 l/min		**AG0196400R**	6,55
	1,5 gpm		**AG0204600R**	2,17
	1,2 gpm		**AG0211000R**	6,83
	8 l/min		**AG0055100R**	23,50
	5,7 l/min - 1,5 gpm		**AG0055000R**	9,69
		(2un)	**AG0098500R**	18,10
	5 l/min		**AG0046600R**	11,40
	3,7 l/min - 1 gpm		**AG0098600R**	9,69
		(2un)	**AG0098700R**	18,10
	3 l/min		**AG0017900R**	13,20
	3,5 gpm		**AG0114300R**	4,44
	1,89 l/min - 0,5 gpm		**AG0129000R**	9,26
	1,32 l/min - 0,35 gpm		**AG0128900R**	9,26
	Clase A		**A525004700**	7,44
		Blanco / White	**A52538210B**	9,17
		Silicona / Silicon	**A525002900**	9,08
	Clase B	Dorado / Gold	**A52536410D**	24,50
		Blanco / White	**A52536410B**	11,90
	Clase C		**A525005800**	7,44
		Blanco / White	**A52538010B**	8,05
	Clase D		**A525003600**	4,85
		Iondur	**A525382116**	33,60
M22	Clase A		**A525009700**	4,29
M26	Clase A		**AG0155500R**	2,20
M28	Clase C		**A525000800**	20,50
M33	7,6 l/min		**AG0098400R**	9,69
1/2-1/2	10 l/min		**AG0055300R**	25,10
	8 l/min		**AG0055400R**	25,10

Clase Z	7.5 - 9.0 l/min a 3 bar
Clase A	13.5 - 15.0 l/min a 3 bar
Clase B	22.8 - 25.2 l/min a 3 bar
Clase C	27.0 - 30.0 l/min a 3 bar
Clase D	34.8 - 37.8 l/min a 3 bar
Clase X	8,3 l/min máx a 4 bar
Clase V	0,76 l/min a 1 bar



				€
M24	Clase A		**AG0220800R**	7,92
M22	9 l/min		**AG0054900R**	23,50
	8 l/min		**AG0054800R**	23,50
	6 l/min		**AG0054700R**	23,50
	5 l/min		**AG0128600R**	10,50
	3,7 l/min -1gpm		**AG0098800R**	11,00
	3 l/min		**AG0017800R**	11,20
	1,89 l/min - 0,5 gpm		**AG0128800R**	9,26
	1,32 l/min - 0,35 gpm		**AG0128700R**	6,32
	Clase A		**A525006600**	7,44
	Clase B	Blanco / White	**AG005390BR**	14,20
	Clase B		**AG0078600R**	27,00



			€
M24	8 l/min	**AG0100007R**	19,50
	5,7 l/min-1,5 gpm	**AG0098907R**	19,50
	5 l/min	**AG0129807R**	9,55
	1 gpm	**AG0129100R**	9,55
	1,89 l/min - 0,5 gpm	**AG0129707R**	16,50
	1,32 l/min - 0,35 gpm	**AG0129607R**	9,55
	Clase A	**A525010007**	10,30
	Clase C	**A525087807**	10,90
	Clase D	**A525087607**	7,92
M21,5	Clase A	**AG0155200R**	7,73
	Clase V	**A525003907**	22,70
	Clase X	**AG0053307R**	36,70
		A525003807	16,70
M18,5	8 l/min	**AG0130507R**	12,80
	5 l/min	**AG0125707R**	12,80
	1 gpm	**AG0130407R**	12,80
	1,89 l/min - 0,5 gpm	**AG0130307R**	13,70
	1,32 l/min - 0,35 gpm	**AG0130207R**	13,70
	Clase A	**A525010807**	13,70
	Clase V	**AG0134107R**	9,88
M16,5	8 l/min	**AG0109607R**	10,20
	5 l/min	**AG0122107R**	10,20
	1 gpm	**AG0130107R**	10,20
	0,5 gpm	**AG0130007R**	12,00
	0,35 gpm	**AG0129907R**	12,00
	Clase V	**A525004007**	16,70
	1,5 gpm	**AG0209300R**	8,02

Aireadores, rompechorros y limitadores
Aerators, flow straightners & limiters



			€
M24	3 l/min	**AG0017900R**	13,20
	1,89 l/min - 0,5 gpm	**AG0099100R**	14,70
	1,32l/min - 0,35 gpm	**AG0122600R**	17,00
M18	1,89 l/min - 0,5 gpm	**AG0170900R**	11,20
	3,7 l/min - 1 gpm	**AG0171000R**	11,20



			€
M24	8 l/min	**AG0055600R**	22,90
	1,5 gpm	**AG0092200R**	14,00
	1 gpm	**AG0129400R**	16,10
	0,5 gpm	**AG0129300R**	16,10
	0,35 gpm	**AG0129200R**	16,10
	Clase A	**A525008900**	4,41
	Clase C	**AG0068900R**	10,90
M16	5,7 l/min -1,5 gpm	**AG0121800R**	14,30
	Clase A	**A525009600**	7,61
	Clase V	**A525009400**	11,30

Aireadores / Aerators



			€
M24	Max	**AG0160500R**	3,12
	8 l/min	**AG0099607R**	12,90
	5,7 l/min -1,5 gpm	**AG0099007R**	12,90
	5 l/min	**AG0129507R**	5,52
	Clase Z	**AG0032207R**	2,82
	Clase C	**AG0187500R**	2,91



			€
Llave rompechorros Armani		**AG0160600R**	20,60
M24		**A525003307**	7,92
	8 l/min	**AG0100107R**	19,50
	5,7 l/min -1,5 gpm	**AG0099500R**	19,50
M18		**A525003207**	5,74

Clase Z	7.5 - 9.0 l/min a 3 bar
Clase A	13.5 - 15.0 l/min a 3 bar
Clase B	22.8 - 25.2 l/min a 3 bar
Clase C	27.0 - 30.0 l/min a 3 bar
Clase D	34.8 - 37.8 l/min a 3 bar
Clase X	8,3 l/min máx a 4 bar
Clase V	0,76 l/min a 1 bar

Medidas en mm
Measurements in mm

Aireadores, rompechorros y limitadores
Aerators, flow straightners & limiters

Rompechorros / Flow straightners



		€
M24	**AG0029400R**	2,74
M28	**A525000900**	9,71
M33	**AG0112107R**	3,53



		€
M24	**AG0085907R**	8,11



Limitadores de ducha / Shower limiters

		€
8 l/min	**AG0099207R**	7,35
6 l/min	**AG0099307R**	6,47
4 l/min	**AG0099407R**	6,47



Limitadores para cartuchos / Cartridges limiters

		€
8 l/min	**AG0131007R**	5,29
6 l/min	**AG0130907R**	5,29
2,5 l/min	**AG0130807R**	5,29



Limitadores para caños / Spout limiters

			€
5 l/min		**AG0217700R**	4,64
7,6 l/min		**AG0130707R**	4,64
4 l/min		**AG0130607R**	4,64
3 l/min	Loft-E	**AG0134400R**	22,60

Limitadores y antirretornos / Limiters & check valves

		€
A525396207	Regulador de caudal 12 l. / Flow regulator 12 L.	22,40
AG0039107R	Limitador de caudal 6l/min (5 un) / Flow limiter 6l/min (5 un)	17,70
AG0055507R	Antirretorno caudal 9l (2 un) / Check valve 9l caudal (2 un)	16,80
AG0112307R	Antirretorno+reg.8L 14 / Backstop+reg.8l 14	14,20

Desagües universales para lavabo y bidé
Basin & bidet universal wastes

	Desagüe / Waste		Válvulas compatibles para desagüe / compatible valves for waste						
	A505400900	**AG0287800R**	Mecanismo click clack + tapón Ø40 (cromado) / Click clack mechanism + cover Ø40 (chromed)			-			
									
	A505401000	**AG0287900R**	Mecanismo click clack + tapón Ø65 (cromado) / Click clack mechanism + cover Ø65 (chromed)			-			
									
	A505401100	**AG0243500R**	Mecanismo click clack + tapón cerámico Ø65 / Click clack mechanism + ceramics cover Ø65			-			
									
Plástico / Plastic	Ø 40	**AG0075200R**	16,80	Ø 40	**AG0085700R**	16,20			
	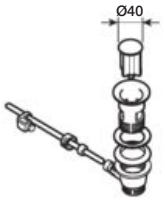								
Latón rugoso / Rough brass	Ø 40	**AG0075300R**	28,80	Ø 40	**AG0096200R**	7,48	Ø 60	**AG0109000R**	21,10
	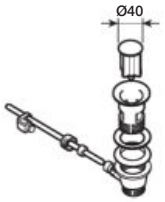			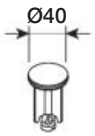			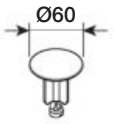		
Latón cromado / Chromed brass	Ø 40	**AG0075400R**	33,80	Ø 40	**AG0085700R**	16,20	Ø 60	**AG0109000R**	21,10
	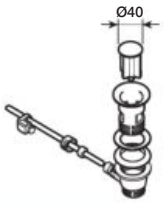			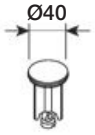			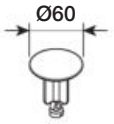		
Latón / Brass	Ø 60	**A525021200**	31,20	Ø 60	**AG0055800R**	14,40			
	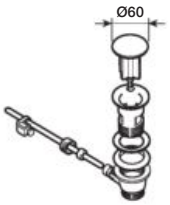			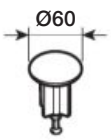					

Medidas en mm
Measurements in mm

Desagües
Wastes

Touch



		€
Pomo y varilla tirador para desagüe automático / Knob and pull rod for automatic drain	**A525768000**	14,50

M2



		€
Varilla tirador para desagüe automático / Pull rod for automatic drain	**A522472019**	6,41

M3, Logica y Amura



		€
Varilla tirador para desagüe automático / Pull rod for automatic drain	**AG0003600R**	7,61

M2



		€
Varilla tirador para desagüe automático / Pull rod for automatic drain	**A522473419**	6,41

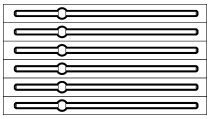

		€
Varillas horizontales de 300 mm (6 un) / Horizontal rods of 300 mm (6 un)	**A525766100**	33,10

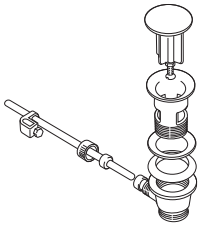

		€
Desagüe automático de 1 ¼" / 1 ¼" automatic drain	**A525021200**	31,20

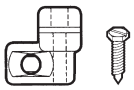

		€
Bridas y tornillo para desagüe automático (6 un) / Flanges and screw for automatic drain (6 un)	**A525096003**	14,10



		€
Enganches para cadenilla monomando (12 un) / Hooks for single lever chain (12 un)	**A525094707**	16,90

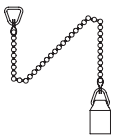

		€
Cadenilla y contrapeso / Chain and counterweight	**A525004600**	8,20

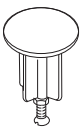

		€
Válvula completa para desagüe automático 1 ¼" de lavado y bidé / Complete valve for drainage automatic 1 ¼" washing and bidet	**AG0055800R**	14,40

Desagües
Wastes

		€
A502250900	Tubo recto 31 x 32 x 300mm (long) / Straight piping 31x32x300m/m long	14,80
A502530216	Tirador desagüe automático Florentina (oro) / Pull handle autom. drain Florentina gold	14,90
A502530316	Tirador desagüe automático Florentina (oro) / Pull handle aut.drain.swivel floren.gold	36,90
A502621203	Tornillo cilíndrico desagüe automático / Screw cylinder automatic drainage	3,32
A506403207	Conjunto desagüe con rebosadero Civic / Set drainage with overflow civic	97,30
A506403900	Desagüe fijo abierto tapón (cromado) / Amberes repl cp plug	33,60
A506404210	Sifon lavabo/bidé / Trap basin/bidet siza	46,80
A52154070B	Pomo tirador (blanco) / Pull knob white	19,30
A522256800	Tubo recto de 36 x 18 x 180mm / Straight tube 36x18x180 mm	67,20
A522472019	Varilla curvada tirador desagüe automático / Pull up rod t/s m2 angled	6,41
A522473419	Varilla tirador desagüe automático (cromado) / Automatic drainage pulling stem chrome	6,41
A522473800	Varilla desagüe automático 300 x 5 / Automatic drainage stem 300x5	6,73
A522541230	Tirador transfusor M2 (blanco) / Diverter valve pull handle m-2 white	11,80
A52254130B	Pomo tirador (blanco) / Pull knob white	6,41
A523450607	Guía válvula desagüe automático / Guide valve automatic drainage	4,00
A523480107	Brida tirador desagüe automático / Pull handle flange automatic drainage	1,25
A52354100B	Pomo tirador desagüe automático (blanco) / Pull knob automatic drainage white	2,45
A52354110B	Pomo tirador desagüe automático (blanco) / Pull knob automatic drainage white	2,33
A52354110D	Pomo tirador desagüe automático (dorado) / Pull knob automatic drainage gold	3,71
A52354140B	Pomo tirador desagüe automático (blanco) / Pull knob automatic drainage white	2,81
A52354140P	Pomo tirador desagüe automático (dorado) / Pull knob automatic drainage gold	5,92

		€
A525004519	Varilla desagüe automático / v2 pop up rod	7,44
A525013100	Tapón con cadenilla para desagüe 1 1/4" / Kit plug chain cubr1 1-4	9,16
A525092807	Junta labiada desagüe automático / Kit lipped seal automatic drainage (6u)	12,80
A525093007	Guía tapón desagüe automático / Kit plug guide automatic drainage	4,16
A525094707	Enganche cadenilla monomando (12 un) / Chainstay inserts pack of 12	16,90
A525096003	Brida y tornillos desagüe automático (6 un) / Basin p-u waste connectors (6u.)	14,10
A52543710D	Desagüe automático 1 1/4 - lavabo / bidé (dorado) / Autom. drainage bs-bi 1 1-4 gold	140,00
A525766100	Varillas 300mm tirador desagüe automático (6 un) / Extra long pop-up rod (300mm) (6u.)	33,10
A526409210	Desagüe automático 1 1/4 - lavabo / bidé / Autom drain-1-1/4basin-bdt (a525439200)	63,60
A526411410	Desagüe 1 1/4 - lavabo-bidé sin enlace / Drainage 1 1/4 bs-bi without connector	24,10
A526414210	Desagüe 1 1/4 - lavabo-bidé con enlace / Drainage 1 1/4 basin-bidet w/connector	28,00
AG0003600R	Pomo tirador ø10 / v2 pop up rod & knob kit	7,61
AG0004616R	Pomo tirador y varilla Modena / Kit knob & rod + dipstick modena	9,59
AG0024300R	Pomo y varilla desagüe automático Victoria-N / Kit stick+handle aut waste Victoria-N	13,60
AG0071300R	Guía tragacadenilla Thesis / Kit retractable chain guide	7,73
AG0075300R	Desagüe 1 1/4 g. media / Kit pop-up waste 1 1/4" metal	28,80
AG0096200R	Válvula desagüe ø40 / Kit drain valve d40, brass, chrome	7,48
AG0109000R	Válvula desagüe automático ø61 1 1/4" / Kit d61 valve automatic drain m 1" 1/4	21,10
AG0152800R	Tirador desagüe automático / Kit pop up waste lift bs insignia	9,95
AG0223300R	Varilla desagüe / Kit lift pop-up waste	5,97
AP0006000R	Tapeta desagüe 65 (cromado) / Kit drain cover chrome ø62	37,60

Complementos fijación lavabo
Basin fixation complements

Bolsa complemento fijación / Fixation complement bag

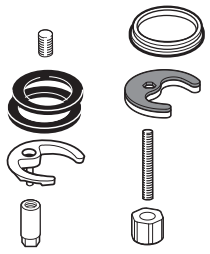

		€
AG0045903R	Compl. fijación monobloques Brava, Gante / Fixation set monoblocks Brava, Gante	10,30
AG0082303R	Complemento fijación Monodin / Fixation complement set Monodin	7,36

Recambios varios grifería
Faucet various spare parts

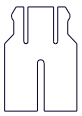

		€
A525094907	Casquillo arrastre para monturas (12 un) / Drive bushing for mounts (12 un)	9,53

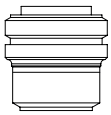

		€
A525095800	Manguito acoplamiento flexo a mezclador ducha / Hose coupling to mixer shower	15,60

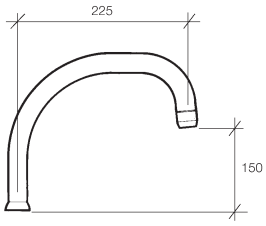

		€
A525084700	Caño mezclador fregadero Monodin / Sink mixer spout kit Monodin	66,80

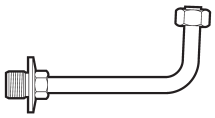

		€
A526505710	Codo enlace a pared para mezcladores baño-ducha / Wall connection elbow for mixers bath-shower	61,20

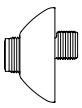

		€
A525551500	Juego enlaces excéntricos antirruido y complemetros para grifería de pared / Eccentric links game anti-noise and complometers for wall-mounted taps	42,70



		€
A525551900	Enlace con antirretorno y filtro / Link with backstop and filter	20,00

		€
A2R0092000	Kit valvu antiret grif (2u) / Check valve kit faucet	14,60
A5053223E0	Kit enl rótula+aireador+llave / Kit kneecap link+aerator+key	117,00
A523600600	Tapon embell barra desl cro / Plug trim plate slide bar chrome	0,93
A525092907	Recamb anillo centr caño gir / Kit ring centre swivel spout	1,57
A525095303	Recamb asiento mezclador ext / Kit mixer seat mounted	35,70
A525098207	Kit tubo grasa griferia / Kit tube with grease	26,10
A525100003	Recambio asientos mezcl ext (6un.) / Kit mixer seats mounted	36,90

		€
A525837107	Kit productos mant griferias / Kit productos mant griferias	26,30
A526146210	Llave reg aliment mec acc ex / Regulating suply valve mech acces.mountd	43,50
A526505310	Enlace vertical mezclador baño (2un) / Bathroom vertical mixer connector (2un)	136,00
AG0019103R	Eje desviador / Diverter stem	56,70
AG0024200R	Kit manguito mezcl duch amura / Mixer sleeve shower kit amura	2,30
AG0045803R	Kit tornillo cilínd. (3 Uds) / Kit cylindrical screw (3 u.)	20,60
AG0104307R	Kit casquillo arrastre temp (5 un) / Kit dragging cap self clos.(5 un)	5,38

Deck-T

Columna termostática para ducha / Shower thermostatic column

A5A9C88C00
A5A9788C00

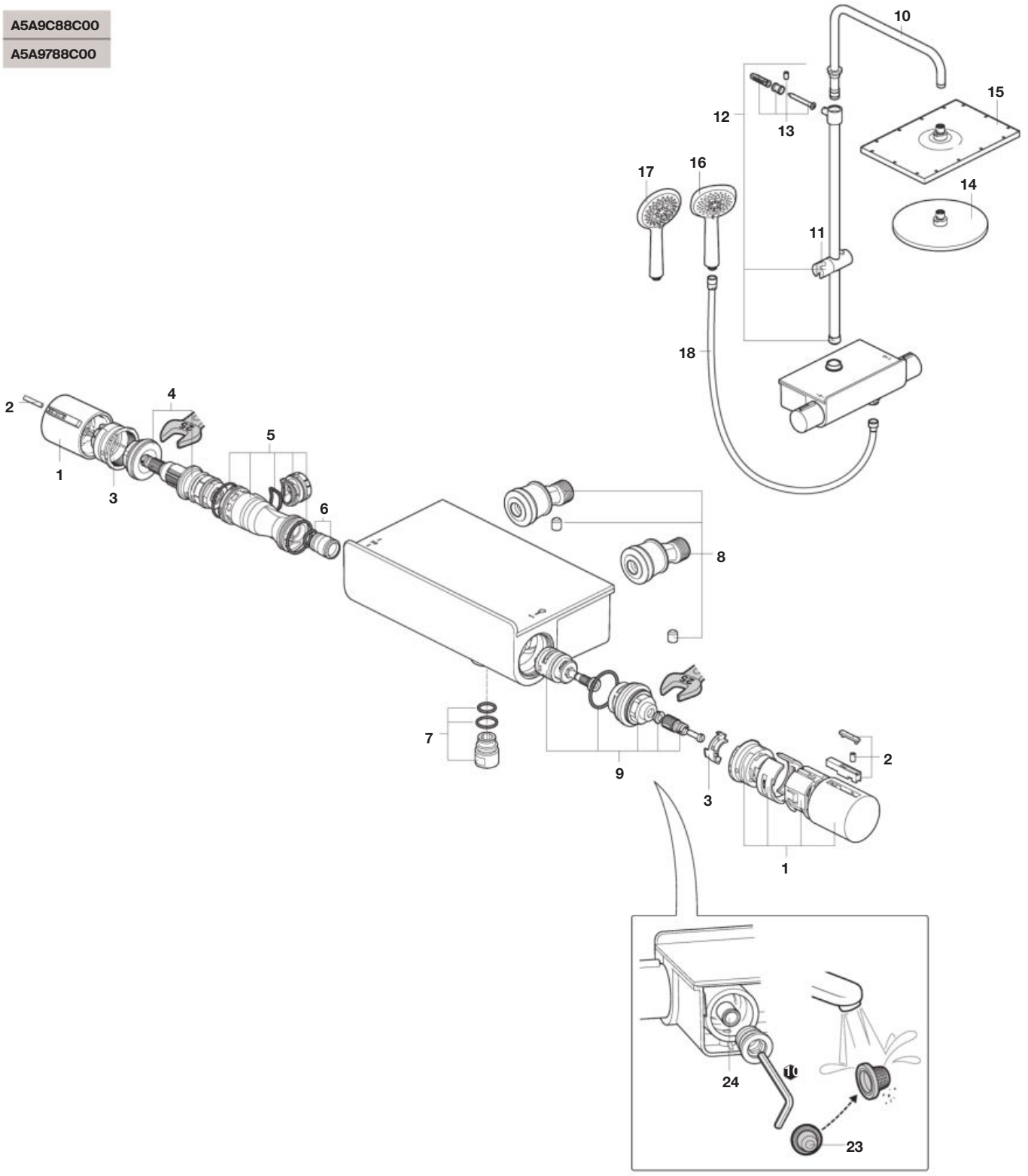

			€
1	**AG0132300R**		110,00
2	**AG0091307R**		36,80
3	**AG0160100R**		3,32
	AG0160200R		3,70
4	**A525015803**		78,50
5	**AG0172900R**		6,20
6	**A525017203**		2,74

		€
7	**A525016609**	5,76
8	**AG0118703R**	53,60
9	**AG0151300R**	28,80
10	**AG0082400R**	75,90
11	**AG0087600R**	49,70
12	**AG0120300R**	114,00
13	**AG0119003R**	36,20

		€
14	**A5B2250C00**	-
15	**A5B3050C00**	-
16	**A5B1108C00**	-
17	**A5B1107C00**	-
18	**A525009900**	52,60
19	**A525023600**	35,50
20	**A525024200**	9,74

		€
21	**AG0029400R**	2,74
22	**AG0192500R**	60,60
23	**AG0192600R**	3,65
24	**AG0026307R**	5,83
25	**AG0068500R**	27,30

Level-T

Columna termostática para ducha / Shower thermostatic column

A5A201A

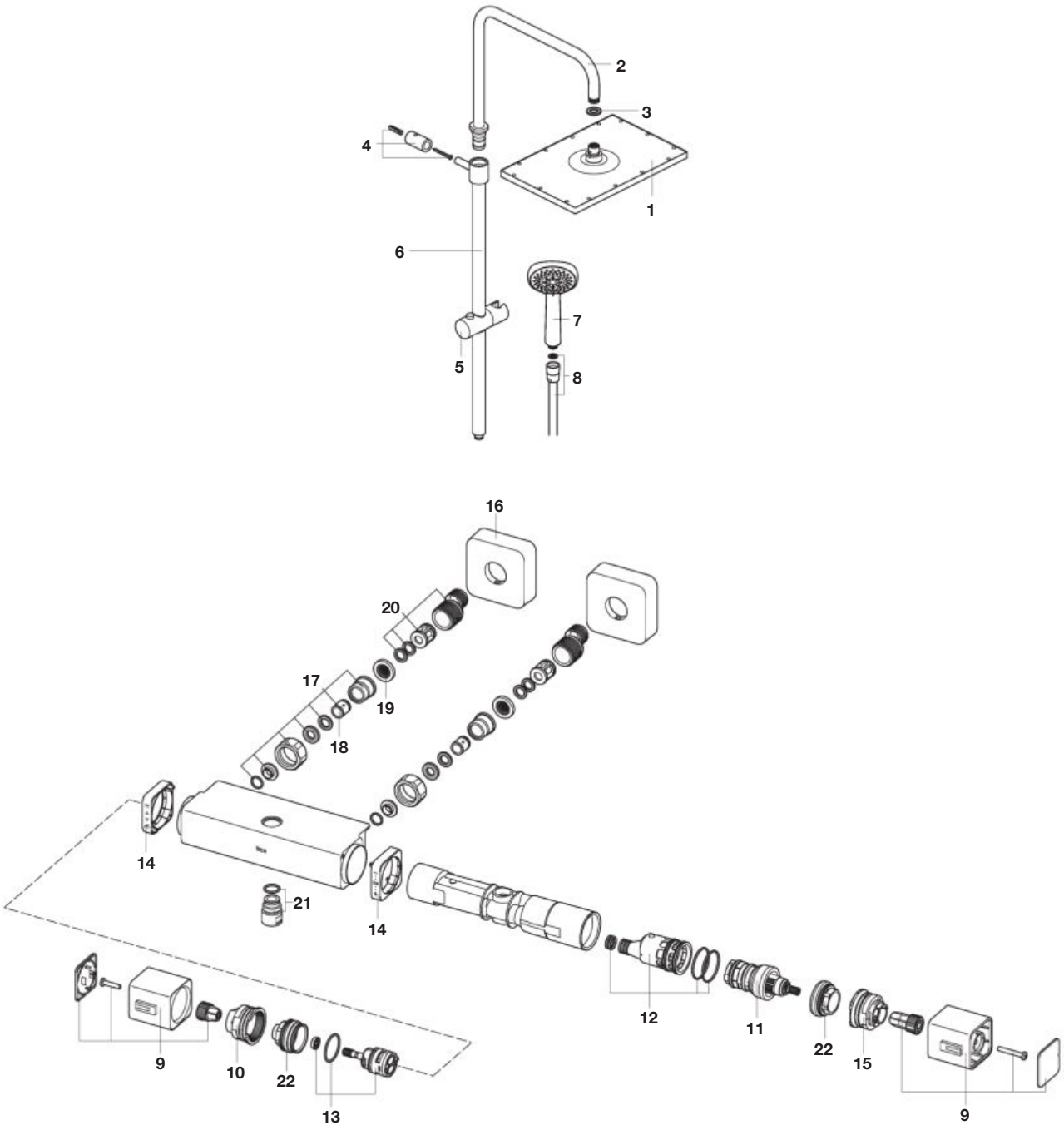

		€
1	**A5B3050C00**	-
2	**AG0082400R**	75,90
3	**AG0056807R**	4,73
4	**AG0087500R**	20,50
5	**AG0087600R**	49,70
6	**AG0221300R**	164,00
7	**A5B1108C00**	-
8	**A525009900**	52,60

		€
9	**AG0159700R**	81,10
10	**AG0132407R**	5,44
11	**A525015803**	78,50
12	**AG0220900R**	5,02
13	**AG0131903R**	22,60
14	**AG0221000R**	13,10
15	**AG0160200R**	3,70
16	**AG0118500R**	28,80

			€
17	**AG0221100R**	2 un	87,60
18	**A525005507**	2 un	7,44
19	**A525016207**	2 un	2,56
20	**AG0103908R**	2 un	17,30
21	**A525016609**		5,76
22	**AG0221200R**		16,80

Index-T

Columna termostática para baño ducha / Bath shower thermostatic column

A5A9H09...

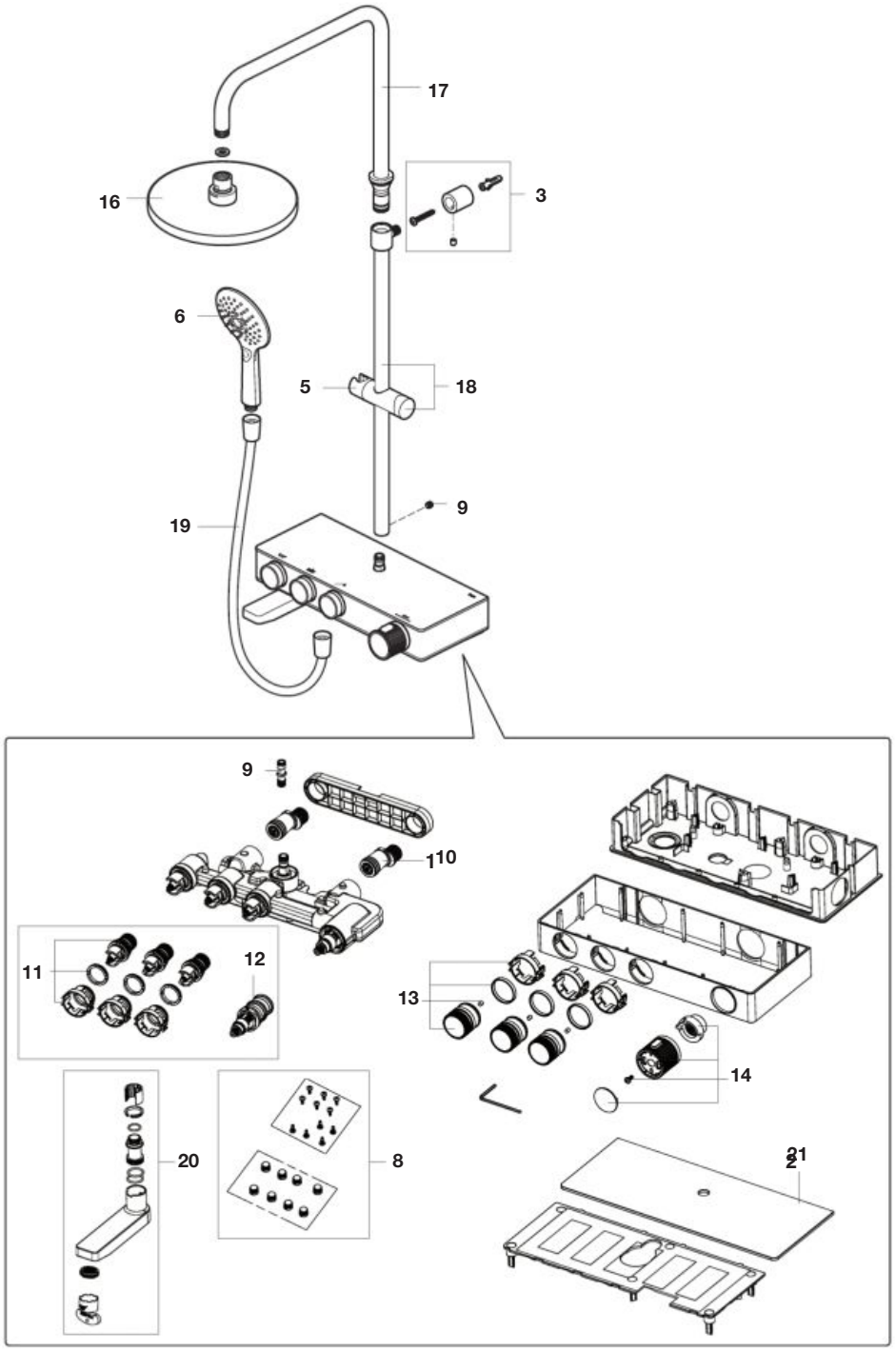

			€
3	**AG0242400R**		6,91
5	**AG0244400R**		11,20
6	**A5B8114C00**		-
8	**AG0242700R**		8,05
9	**AG0242800R**		3,91
10	**AG0242900R**	2 un	10,20

		€
11	**AG0243000R**	12,20
12	**AG0243100R**	73,00
13	**AG0243200R**	3,71
14	**AG0243300R**	5,15
16	**AG0087300R**	125,00
17	**AG0243600R**	93,80

		€
18	**AG0243700R**	90,50
19	**A5B2116C00**	-
20	**AG0243900R**	56,50
21	**AG0244000R**	35,80

Index-T

Columna termostática para ducha / Shower thermostatic column

A5A9109

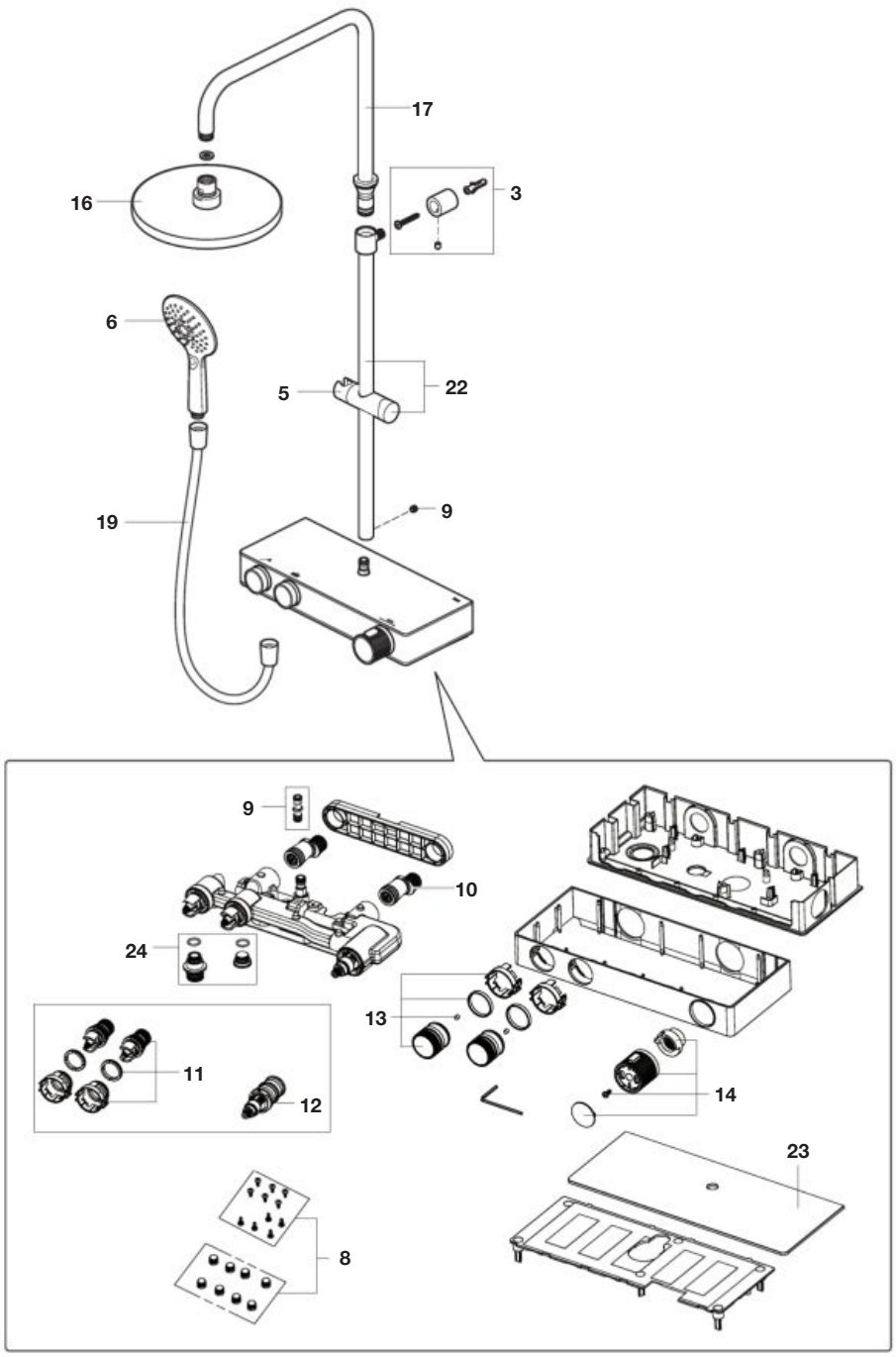

			€
3	**AG0242400R**		6,91
5	**AG0244400R**		11,20
6	**A5B8114C00**		-
8	**AG0242700R**		8,05
9	**AG0242800R**		3,91
10	**AG0242900R**	2 un	10,20

		€
11	**AG0243000R**	12,20
12	**AG0243100R**	73,00
13	**AG0243200R**	3,71
14	**AG0243300R**	5,15
16	**AG0087300R**	125,00
17	**AG0243600R**	93,80

		€
19	**A5B2116C00**	-
22	**AG0244100R**	74,70
23	**AG0244200R**	30,60
24	**AG0244300R**	10,50

Index-T

Columna termostática para ducha / Shower thermostatic column

A5A9J09...

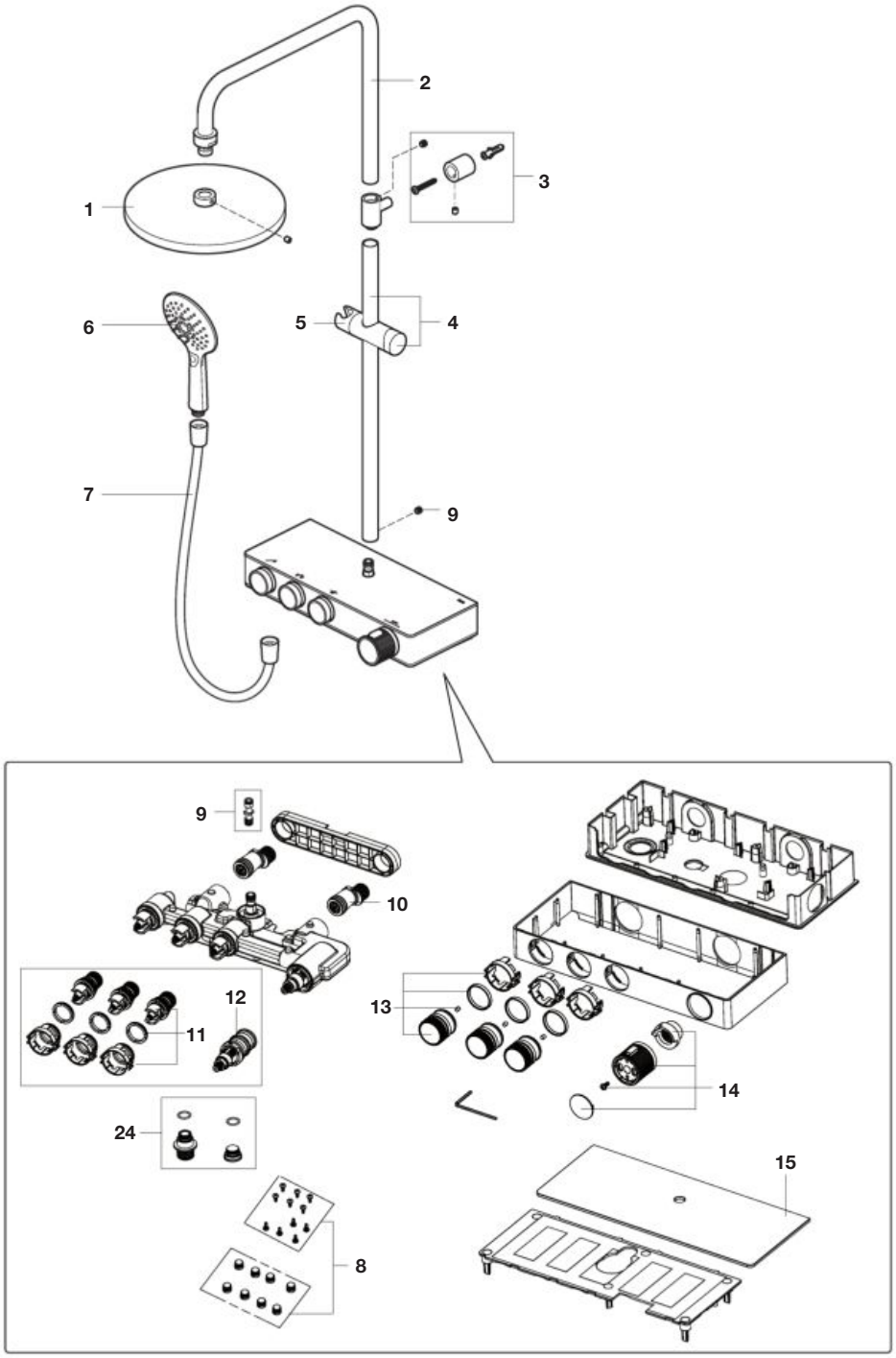

		€
1	**AG0242200R**	84,70
2	**AG0242300R**	78,30
3	**AG0242400R**	6,91
4	**AG0242500R**	92,90
5	**AG0244400R**	11,20
6	**A5B8114C00**	-

			€
7	**A5B2216C00**		-
8	**AG0242700R**		8,05
9	**AG0242800R**		3,91
10	**AG0242900R**	2 un	10,20
11	**AG0243000R**		12,20
12	**AG0243100R**		73,00

		€
13	**AG0243200R**	3,71
14	**AG0243300R**	5,15
15	**AG0243400R**	35,80
24	**AG0244300R**	10,50

Even-T Square

Columna termostática para baño-ducha / Bath shower thermostatic column

A5A2080C00

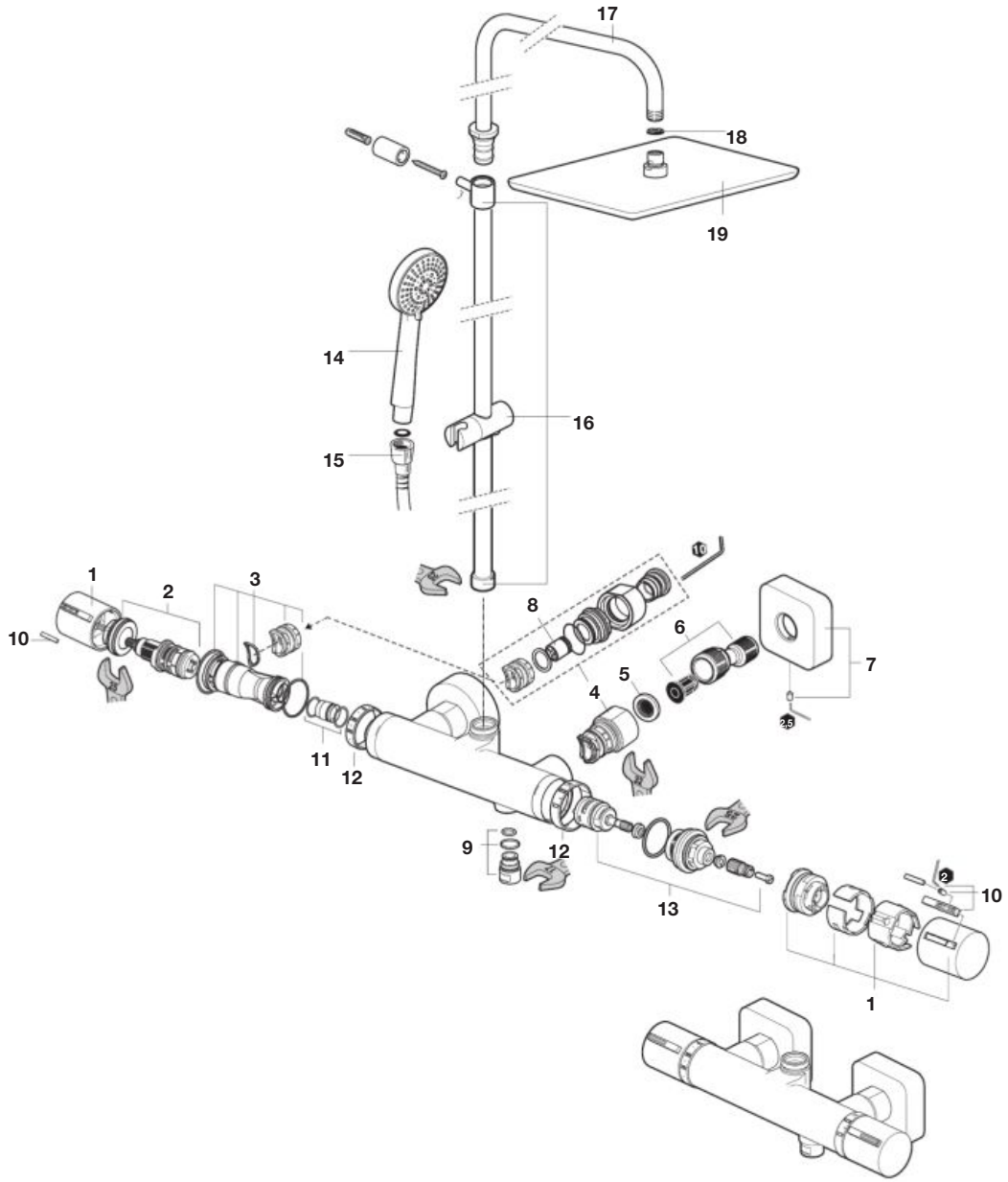

		€
1	**AG0132300R**	110,00
2	**A525015803**	78,50
3	**AG0172900R**	6,20
4	**A525016000**	57,40

		€
5	**A525016207**	2,56
6	**A525005308**	13,50
7	**AG0118500R**	28,80
8	**AG0026307R**	5,83

		€
9	**A525016609**	5,76
10	**AG0091307R**	36,80
11	**A525017203**	2,74
12	**AG0096707R**	19,70

		€
13	**AG0151300R**	28,80
14	**A5B8113C00**	-
15	**A525009900**	52,60
16	**AG0082500R**	86,50

		€
17	**AG0082400R**	75,90
18	**AG0056807R**	4,73
19	**A5B3050C00**	-

Even-T Square

Columna termostática para ducha / Shower thermostatic column

A5A2H2EC00

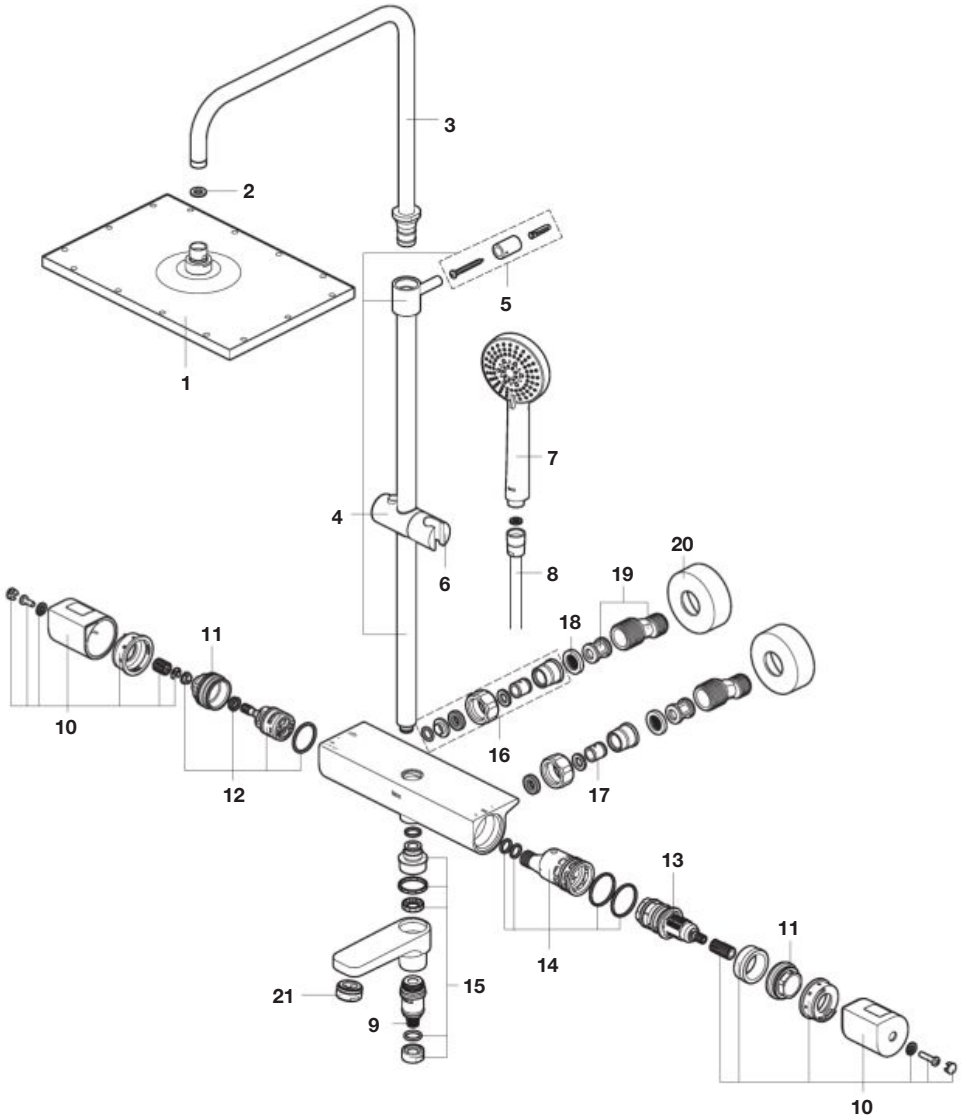

			€
1		**A5B3050C00**	-
2		**AG0056807R**	4,73
3		**AG0082400R**	75,90
4		**AG0238400R**	75,00
5		**AG0087500R**	20,50
6		**AG0087600R**	49,70

			€
7		**A5B8113C00**	-
8		**A525009900**	52,60
9		**AG0232000R**	9,14
10		**AG0231900R**	67,70
11		**AG0221200R**	16,80
12		**AG0131903R**	22,60

			€
13		**A525015803**	78,50
14		**AG0220900R**	5,02
15		**AG0232100R**	36,20
16		**AG0221100R**	87,60
17	2 un	**A525005507**	7,44
18	2 un	**A525016207**	2,56

			€
19	2 un	**AG0156900R**	22,30
20	2 un	**AG0116800R**	9,26
21	2 un	**AG0029400R**	2,74

Even-T Round

Columna termostática para ducha / Shower thermostatic column

A5A9780C00

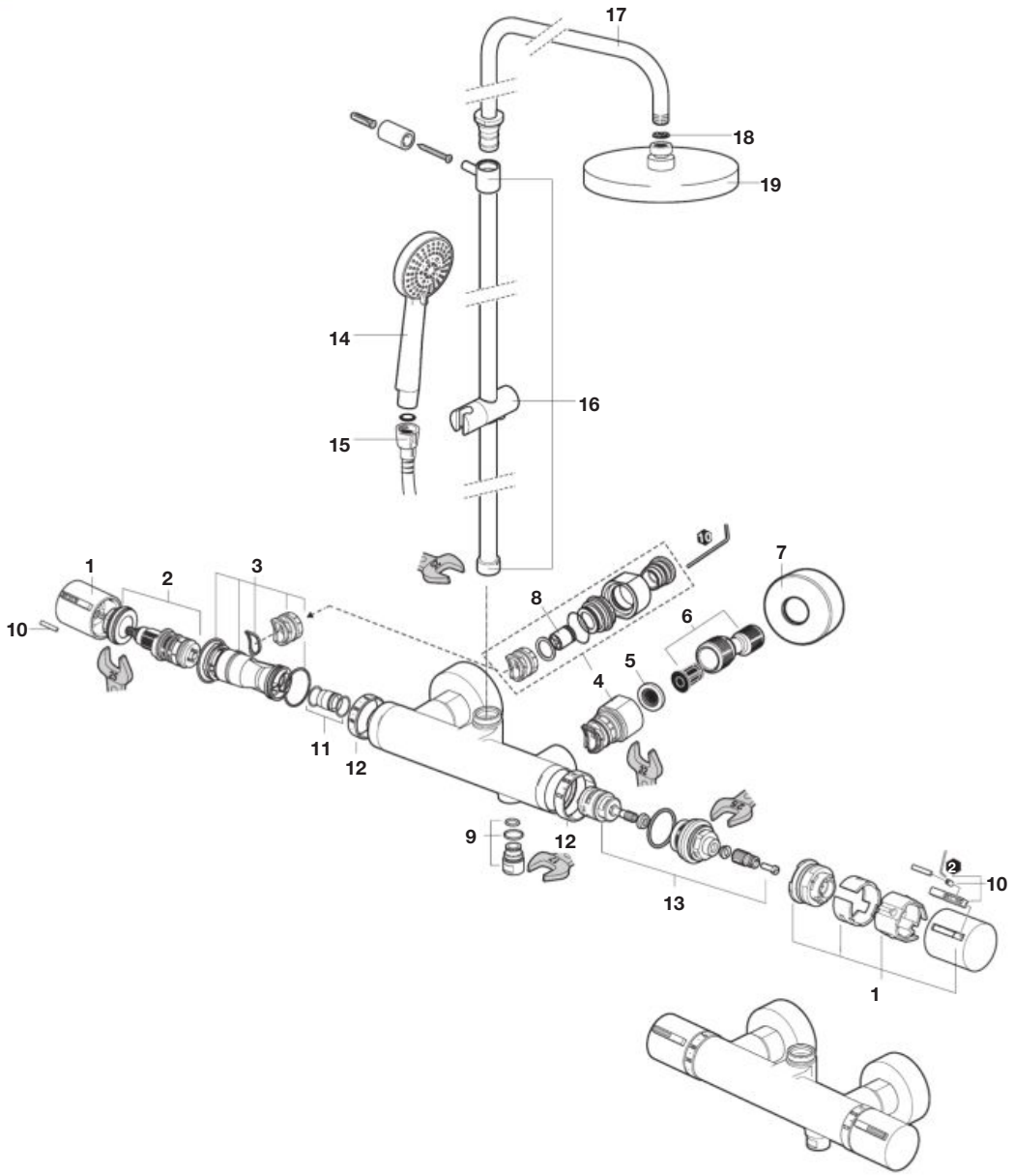

		€
1	**AG0132300R**	110,00
2	**A525015803**	78,50
3	**AG0172900R**	6,20
4	**A525016000**	57,40

		€
5	**A525016207**	2,56
6	**A525005308**	13,50
7	**AG0087100R**	6,94
8	**AG0026307R**	5,83

		€
9	**A525016609**	5,76
10	**AG0091307R**	36,80
11	**A525017203**	2,74
12	**AG0096707R**	19,70

		€
13	**AG0151300R**	28,80
14	**A5B8113C00**	-
15	**A525009900**	52,60
16	**AG0082500R**	86,50

		€
17	**AG0082400R**	75,90
18	**AG0056807R**	4,73
19	**A5B2250C00**	-

Even-T

Columna termostática para ducha / Shower thermostatic column

A5A202E	Square
A5A9A2E	Round

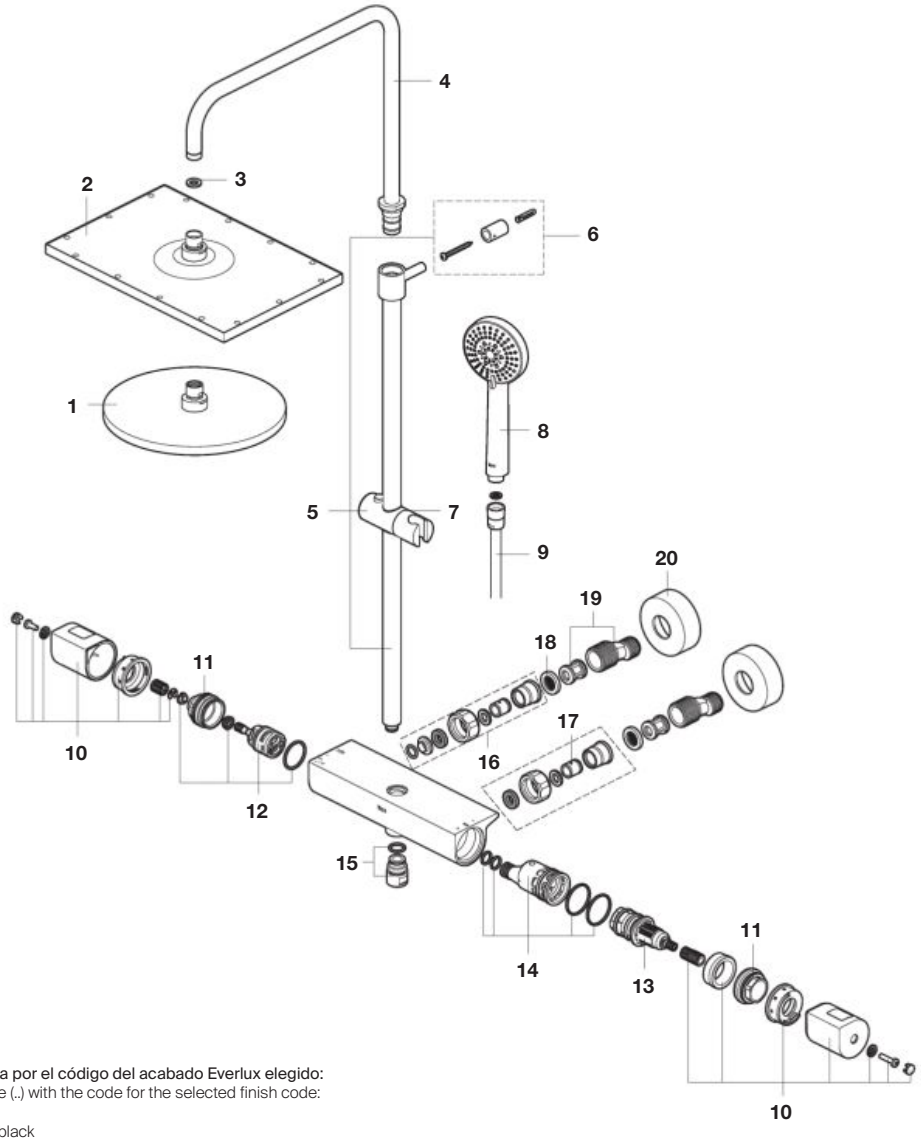

Sustituir los (...) de la referencia por el código del acabado Everlux elegido:
In the product reference replace (..) with the code for the selected finish code:

00 Cromado / Chromed
CN Negro titanio / Titanium black
RG Oro rosado / Rose gold
NM Negro titanio cepillado / Brushed titanium black

				€
1		**A5B2250C00**	Round	-
		A5B2250CN0		-
		A5B2250CRG		-
		A5B2250CNM		-
2		**A5B3050C00**	Square	-
		A5B3050CN0		-
		A5B3050CRG		-
		A5B3050CNM		-
3	5 un	**AG0056807R**		4,73
4		**AG0082400R**		75,90
		AG00824CNR		203,00
		AG00824RGR		155,00
		AG00824NMR		203,00
5		**AG0221300R**		164,00
		AG02213CNR		223,00
		AG02213RGR		151,00
		AG02213NMR		221,00

		€
6	**AG0087500R**	20,50
	AG00875CNR	133,00
	AG00875RGR	49,30
	AG00875NMR	127,00
7	**AG0087600R**	49,70
	AG00876CNR	142,00
	AG00876RGR	38,20
	AG00876NMR	117,00
8	**A5B8113C00**	-
	A5B1B03CCN	-
	A5B1B03CRG	-
	A5B1B03CNM	-
9	**A525009900**	52,60
10	**AG0231900R**	67,70
	AG02319CNR	130,00
	AG02319RGR	130,00
	AG02319NMR	177,00
11	**AG0221200R**	16,80
12	**AG0131903R**	22,60

		€
13	**A525015803**	78,50
14	**AG0220900R**	5,02
15	**AG0238500R**	22,60
	AG02385CNR	21,80
	AG02385RGR	21,80
	AG02385NMR	21,80
16	**AG0221100R**	87,60
	AG02211CNR	38,90
	AG02211RGR	38,90
	AG02211NMR	41,50
17	2 un **A525005507**	7,44
18	2 un **A525016207**	2,56
19	2 un **AG0156900R**	22,30
20	2 un **AG0116800R**	9,26
	AG01168CNR	69,10
	AG01168RGR	53,50
	AG01168NMR	68,30

Victoria-T

Columna termostática de ducha y baño / Shower & bath thermostatic column

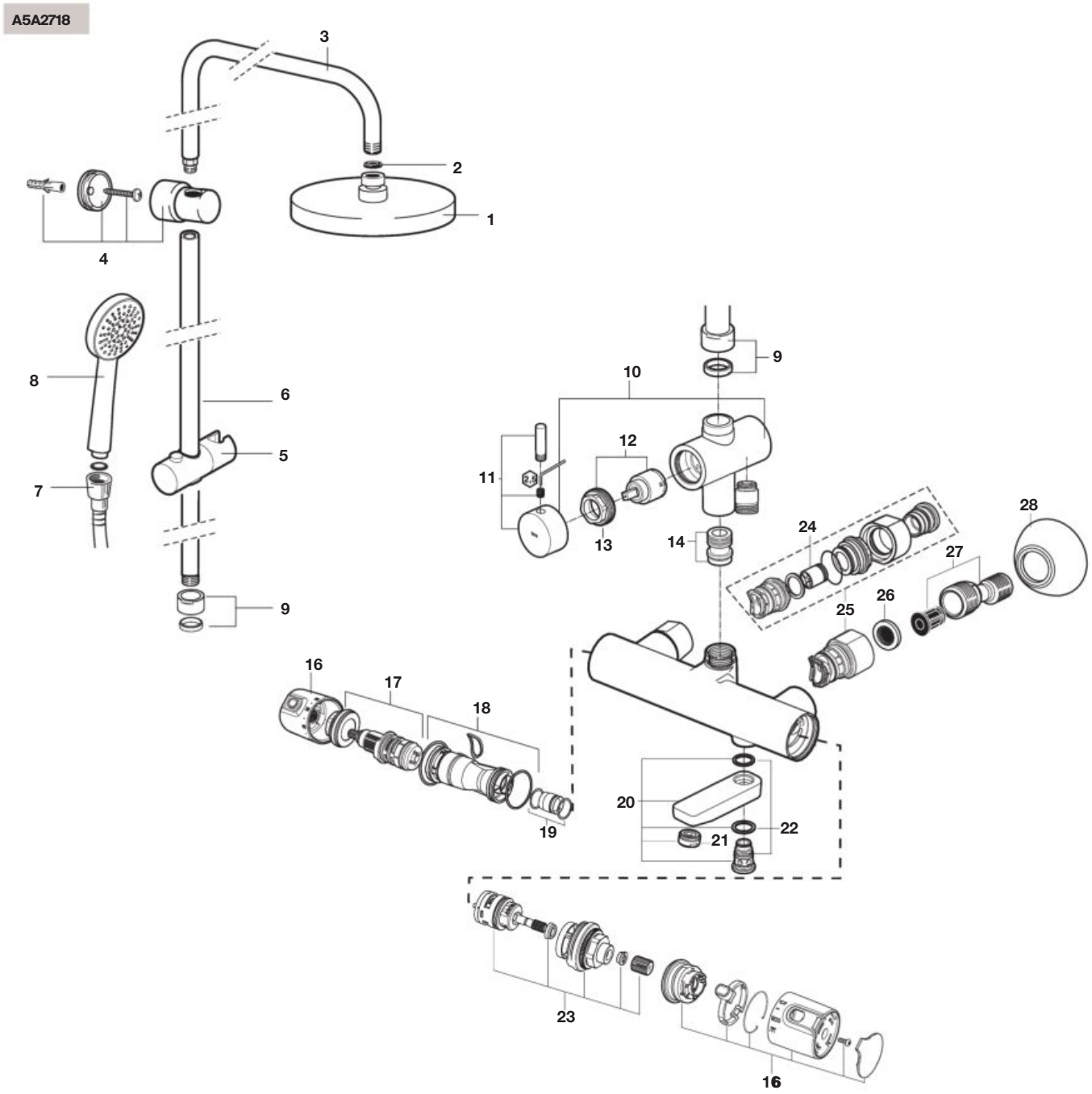

		€
1	**AG0087300R**	125,00
2	**AG0056807R**	4,73
3	**AG0041400R**	76,30
4	**AG0041300R**	40,40
5	**AG0041500R**	15,90
6	**AG0087700R**	75,90
7	**A525009800**	27,10

		€
8	**A5B9103C00**	-
9	**AG0056300R**	6,83
10	**AG0077300R**	114,00
11	**AG0073100R**	8,86
12	**AG0073207R**	24,10
13	**AG0073303R**	3,97
14	**AG0073003R**	38,20

		€
16	**AG0038000R**	89,20
17	**A525015803**	78,50
18	**AG0172900R**	6,20
19	**A525017203**	2,74
20	**AG0074800R**	105,00
21	**AG0029400R**	2,74
22	**AG0074900R**	34,70

			€
23		**AG0151300R**	28,80
24		**AG0026307R**	5,83
25		**A525016000**	57,40
26		**A525016207**	2,56
27	2 un	**A525016303**	32,10
28	2 un	**AG0085400R**	8,41

Victoria-T

Columna termostática telescópica / Telescopic thermostatic column

A5A2018

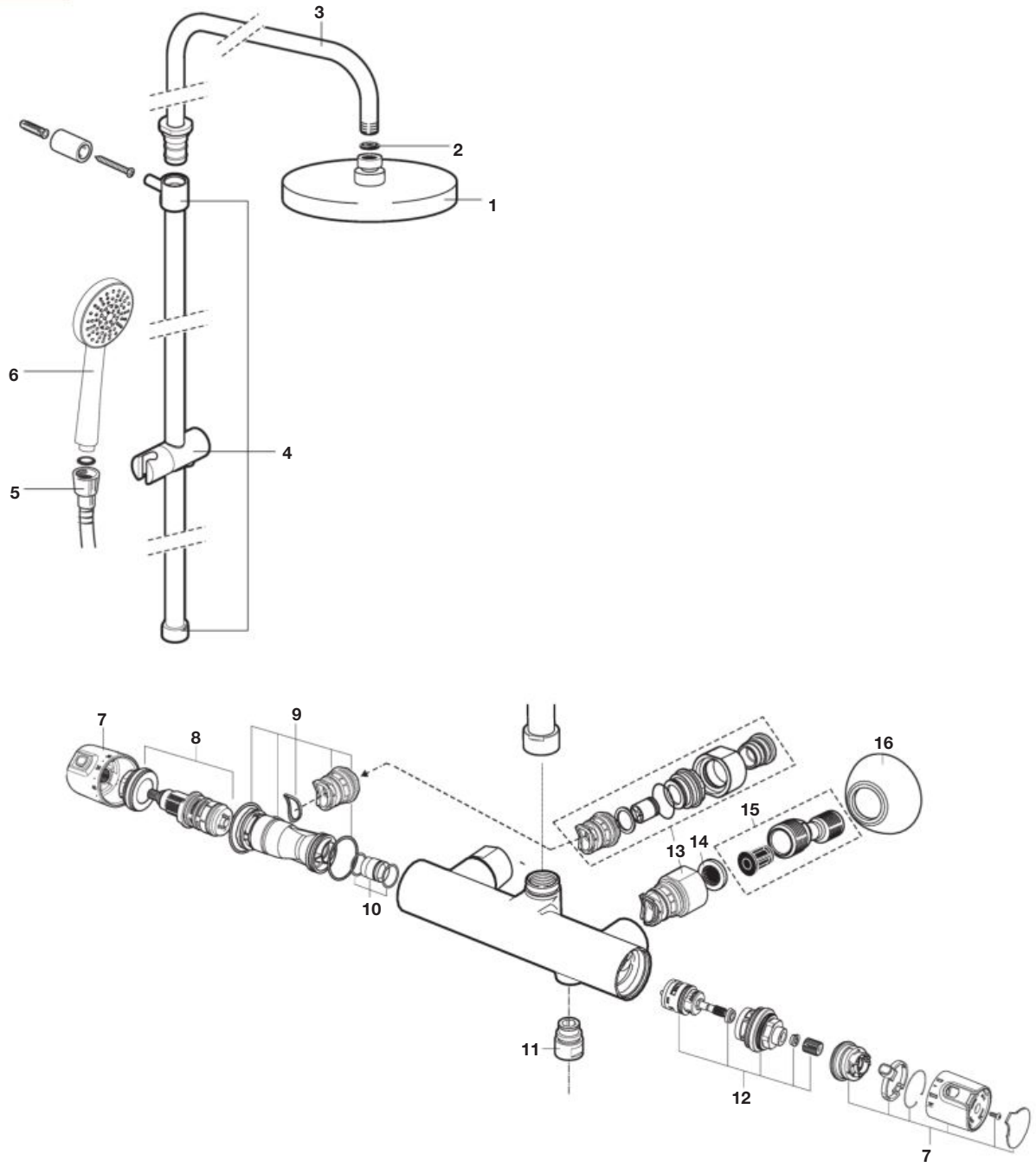

		€
1	**AG0087300R**	125,00
2	**AG0056807R**	4,73
3	**AG0082400R**	75,90
4	**AG0082500R**	86,50

		€
5	**A525009800**	27,10
6	**A5B9103C00**	-
7	**AG0041600R**	87,60
8	**A525015803**	78,50

		€
9	**AG0172900R**	6,20
10	**A525017203**	2,74
11	**A525016609**	5,76
12	**AG0151300R**	28,80

			€
13		**A525016000**	57,40
14		**A525016207**	2,56
15	2 un	**A525016303**	32,10
16	2 un	**AG0085400R**	8,41

Victoria-T Plus

Columna termostática para ducha / Shower thermostatic column

A5A2F18

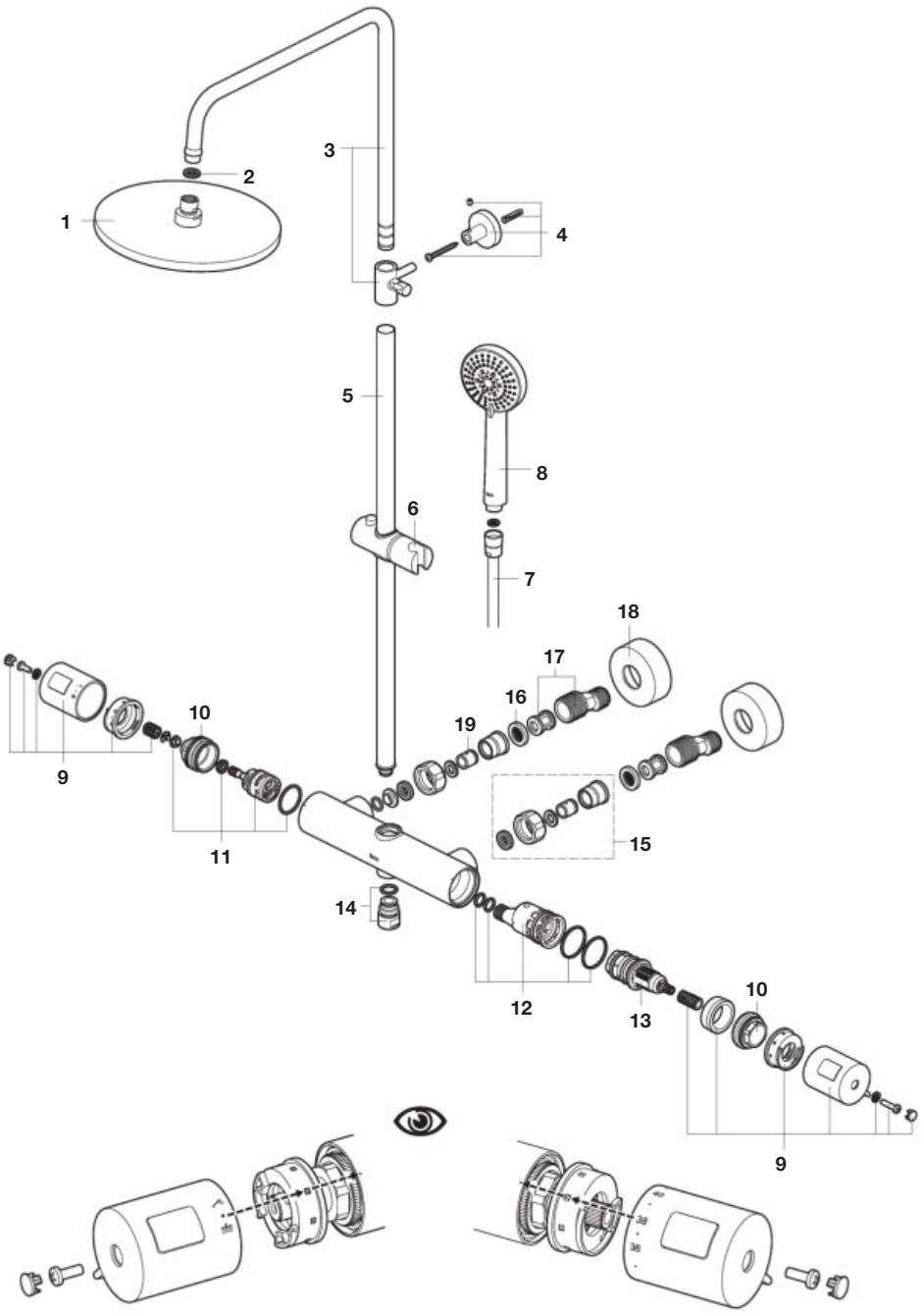

			€
1		**AG0087300R**	125,00
2		**AG0056807R**	4,73
3		**AG0220400R**	58,90
4		**AG0221700R**	9,89
5		**AG0221800R**	31,20

			€
6		**AG0220600R**	20,30
7		**A525009800**	27,10
8		**A5B8113C00**	-
9		**AG0221600R**	21,10
10		**AG0221200R**	16,80

			€
11		**AG0131903R**	22,60
12		**AG0220900R**	5,02
13		**A525015803**	78,50
14		**A525016609**	5,76
15		**AG0221100R**	87,60

			€
16		**A525016207**	2,56
17	2 un	**AG0156900R**	22,30
18	2 un	**AG0116800R**	9,26
19		**A525005507**	7,44

Victoria-T Plus

Columna termostática para ducha / Shower thermostatic column

A5A2C18

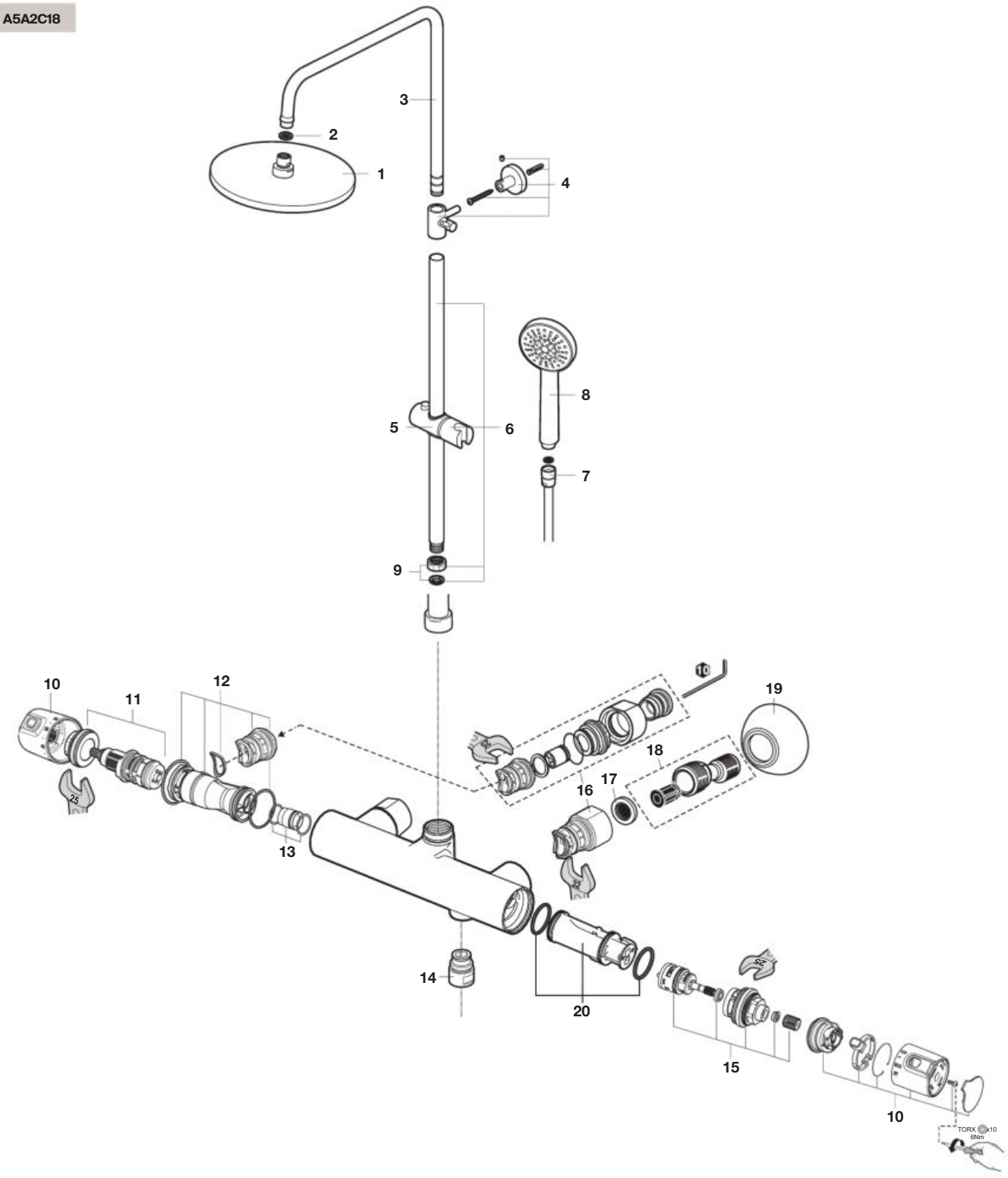

		€
1	**AG0087300R**	125,00
2	**AG0056807R**	4,73
3	**AG0220400R**	58,90
4	**AG0220700R**	8,09
5	**AG0220600R**	20,30
6	**AG0220300R**	42,90

		€
7	**A525009800**	27,10
8	**A5B9103C00**	-
9	**AG0220500R**	3,50
10	**AG0041600R**	87,60
11	**A525015803**	78,50
12	**AG0172900R**	6,20

		€
13	**A525017203**	2,74
14	**A525016609**	5,76
15	**AG0151300R**	28,80
16	**AG0131300R**	43,80
17	**A525016207**	2,56
18	**AG0156900R**	22,30

		€
19	**AG0085400R**	8,41
20	**A525016707**	14,90

Victoria-T Plus

Columna termostática para ducha y baño / Shower & bath thermostatic column

A5A2J18

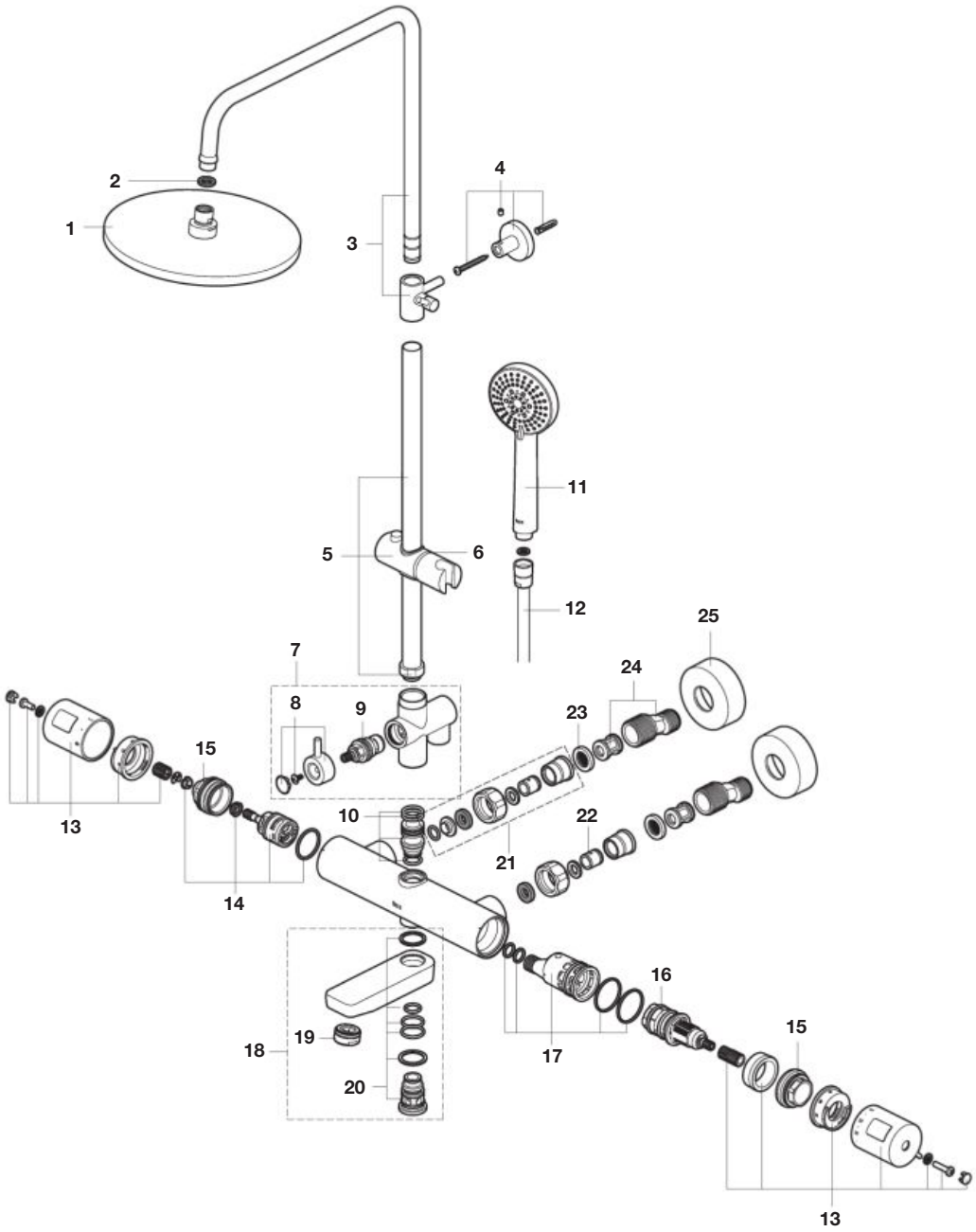

		€
1	**AG0087300R**	125,00
2	**AG0056807R**	4,73
3	**AG0220400R**	58,90
4	**AG0221700R**	9,89
5	**AG0231600R**	69,70
6	**AG0220600R**	20,30
7	**AG0220000R**	45,80

		€
8	**AG0220100R**	4,27
9	**AG0220200R**	6,42
10	**AG0230800R**	37,60
11	**A5B8113C00**	-
12	**A5B2716C00**	-
13	**AG0221600R**	21,10
14	**AG0131903R**	22,60

		€
15	**AG0221200R**	16,80
16	**A525015803**	78,50
17	**AG0220900R**	5,02
18	**AG0074800R**	105,00
19	**AG0029400R**	2,74
20	**AG0074900R**	34,70
21	**AG0221100R**	87,60

			€
22		**A525005507**	7,44
23	2 un	**A525016207**	2,56
24	2 un	**AG0156900R**	22,30
25	2 un	**AG0116800R**	9,26

Victoria-T Plus

Columna termostática para ducha y baño / Shower & bath thermostatic column

A5A2F18

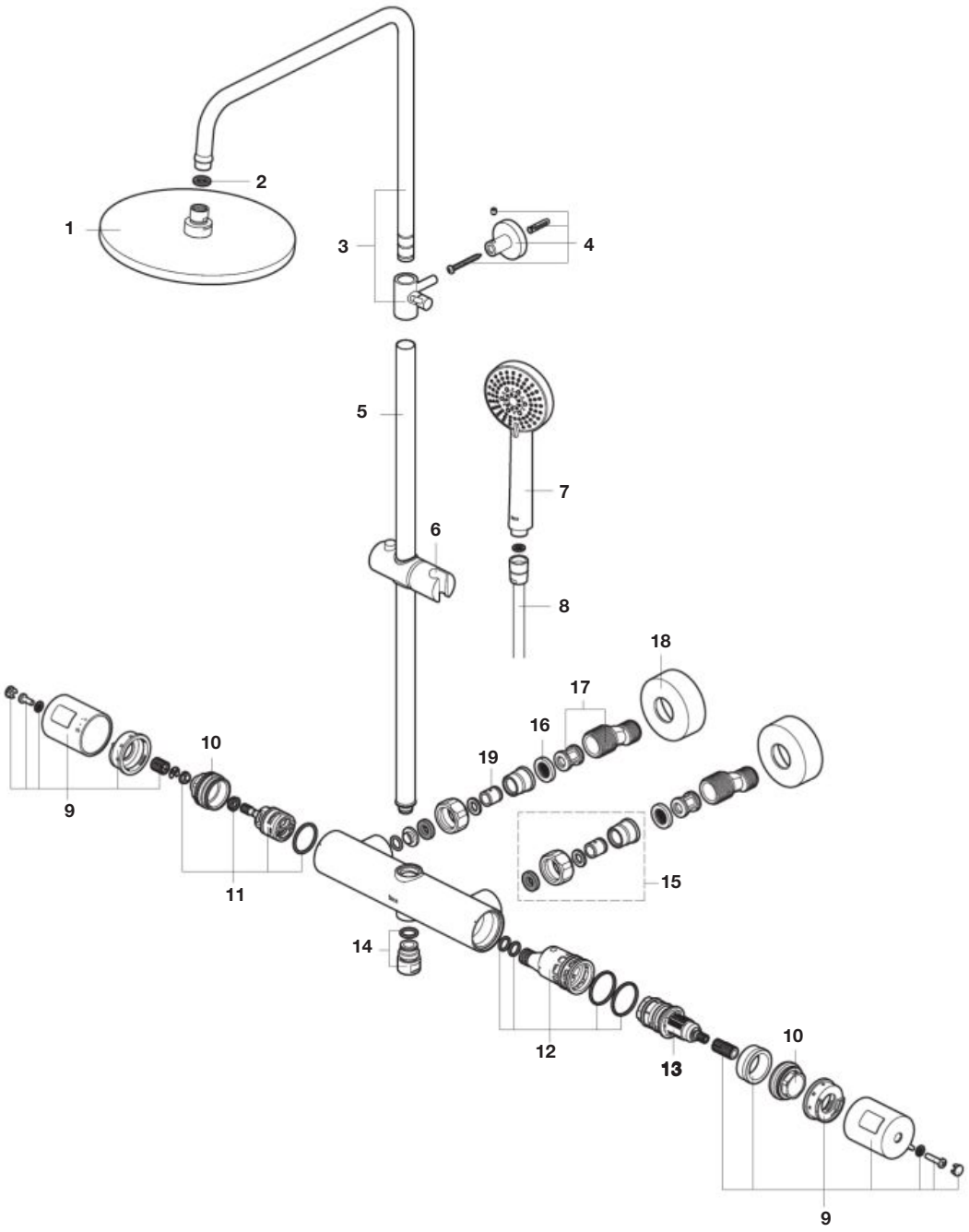

		€
1	**AG0087300R**	125,00
2	**AG0056807R**	4,73
3	**AG0220400R**	58,90
4	**AG0221700R**	9,89
5	**AG0221800R**	31,20
6	**AG0221900R**	-
7	**A5B1103C00**	-

		€
8	**A525009800**	27,10
9	**AG0221600R**	21,10
10	**AG0221200R**	16,80
11	**AG0131903R**	22,60
12	**AG0220900R**	5,02
13	**A525015803**	78,50
14	**A525016609**	5,76

			€
15		**AG0221100R**	87,60
16	2 un	**A525016207**	2,56
17	2 un	**AG0156900R**	22,30
18	2 un	**AG0116800R**	9,26
19	2 un	**A525005507**	7,44

Victoria Basic

Columna termostática para ducha y baño / Shower & bath thermostatic column

A5A2H18..0
A5A2N18..0

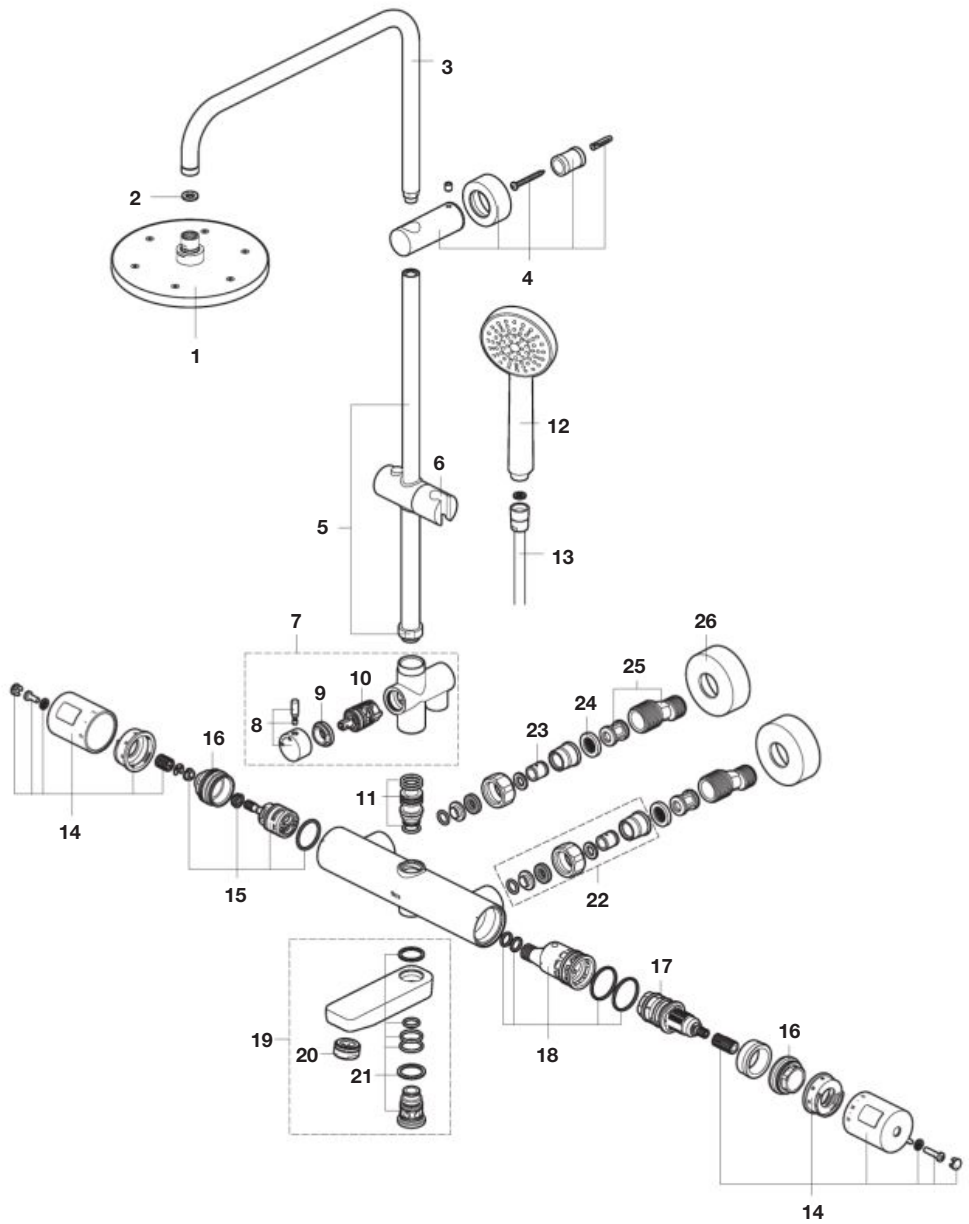

			€
1	**AG0087300R**	Round	125,00
2	**AG0056807R**	Square	4,73
3	**AG0232200R**		47,70
4	**AG0222100R**		30,60
5	**AG0232300R**		43,20
6	**AG0041500R**		15,90
7	**AG0232500R**		81,20
8	**AG0232600R**		8,67
9	**AG0232800R**		3,35

				€
10	2 un	**AG0232700R**		7,00
11		**AG0230800R**		37,60
12		**A5B9103C00**		-
13		**A5B2716C00**		-
14		**AG0221600R**	L / R	21,10
15		**AG0131903R**		22,60
16		**AG0221200R**		16,80
17		**A525015803**		78,50
18		**AG0220900R**		5,02

			€
19		**AG0074800R**	105,00
20		**AG0029400R**	2,74
21		**AG0074900R**	34,70
22		**AG0221100R**	87,60
23	2 un	**A525005507**	7,44
24	2 un	**A525016207**	2,56
25	2 un	**AG0156900R**	22,30
26	2 un	**AG0116800R**	9,26

Victoria-T Basic

Columna termostática / Thermostatic column

A5A9718

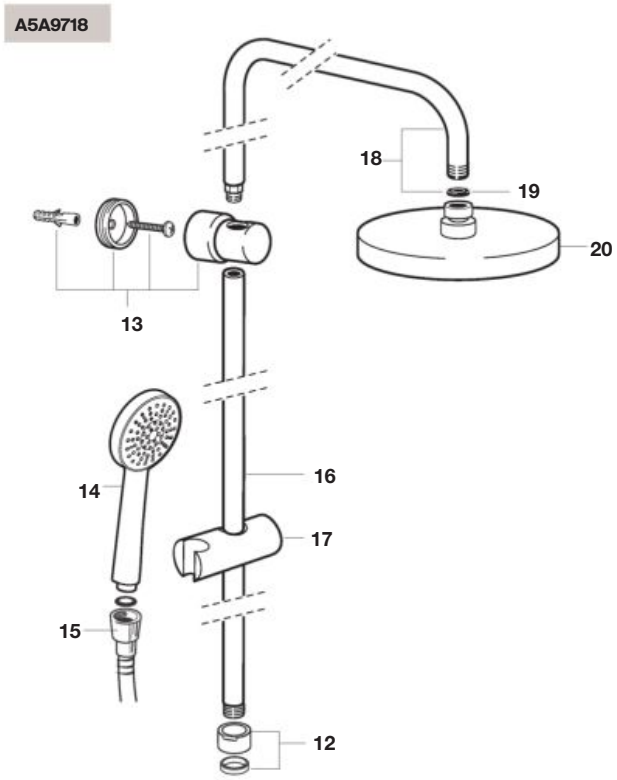

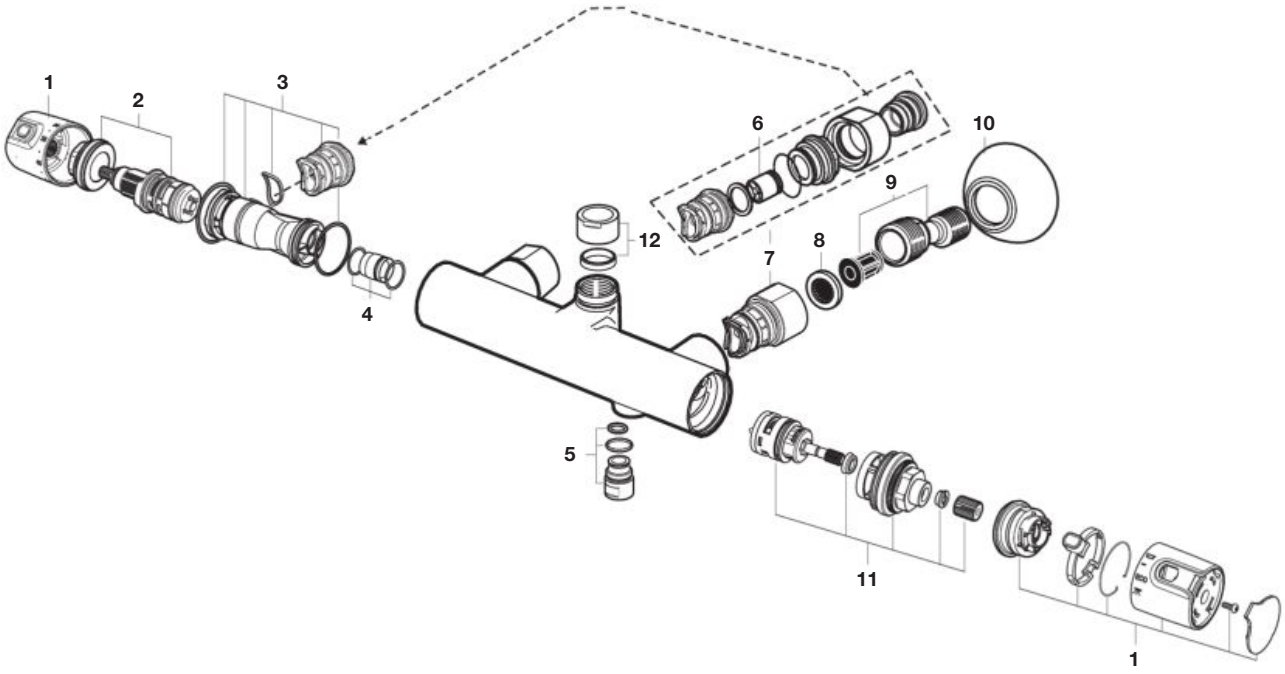

		€
1	**AG0041600R**	87,60
2	**A525015803**	78,50
3	**AG0172900R**	6,20
4	**A525017203**	2,74

		€
5	**A525016609**	5,76
6	**AG0026307R**	5,83
7	**A525016000**	57,40
8	**A525016207**	2,56

		€
9	**A525016303**	32,10
10	**AG0085400R**	8,41
11	**AG0151300R**	28,80
12	**AG0056300R**	6,83

		€
13	**AG0041300R**	40,40
14	**A5B9103C00**	-
15	**A525009800**	27,10
16	**AG0041200R**	52,70

		€
17	**AG0041500R**	15,90
18	**AG0041400R**	76,30
19	**AG0056807R**	4,73
20	**AG0087300R**	125,00

Victoria-T Basic

Columna termostática para ducha / Shower thermostatic column

A5A9F18..0

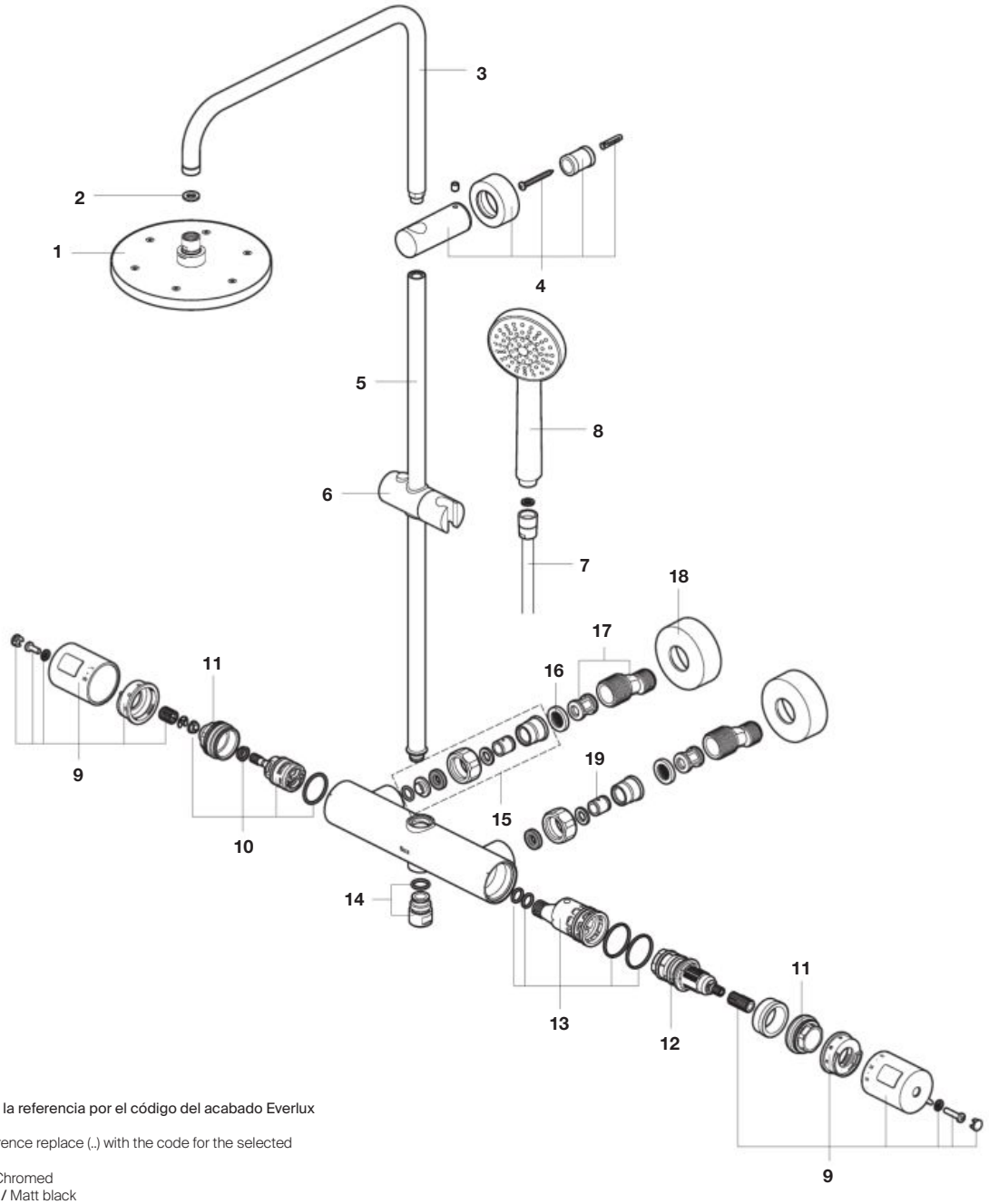

Sustituir los (...) de la referencia por el código del acabado Everlux elegido:
In the product reference replace (..) with the code for the selected finish code:
00 Cromado / Chromed
NB Negro mate / Matt black

			€
1	**AG0087300R**		125,00
	AG00873NBR		30,60
2	**AG0056807R**		4,73
3	**AG0228400R**		65,90
	AG02284NBR		37,40
4	**AG0222100R**		30,60
	AG02221NBR		18,20
5	**AG0228500R**		67,10
	AG02285NBR		36,20
6	**AG0041500R**		15,90
	AG00415NBR		6,05

			€
7	**A525009800**		27,10
	A5B2116NB0	Negro mate	-
8	**A5B8113C00**		-
	A5B8113NB0	Negro mate	-
9	**AG0221600R**		21,10
	AG02216NBR		23,00
10	**AG0131903R**		22,60
11	**AG0221200R**		16,80
12	**A525015803**		78,50
13	**AG0220900R**		5,02

				€
14		**A525016609**		5,76
		AG02385CNR	Negro mate	21,80
15		**AG0221100R**		87,60
		AG02211NBR		27,40
16	2 un	**A525016207**		2,56
17	2 un	**AG0156900R**		22,30
18	2 un	**AG0116800R**		9,26
		AG01168NBR		38,20
19		**A525005507**		7,44

Even-M

Columna de ducha monomando / Single-lever shower column

A5A9790C00 Round

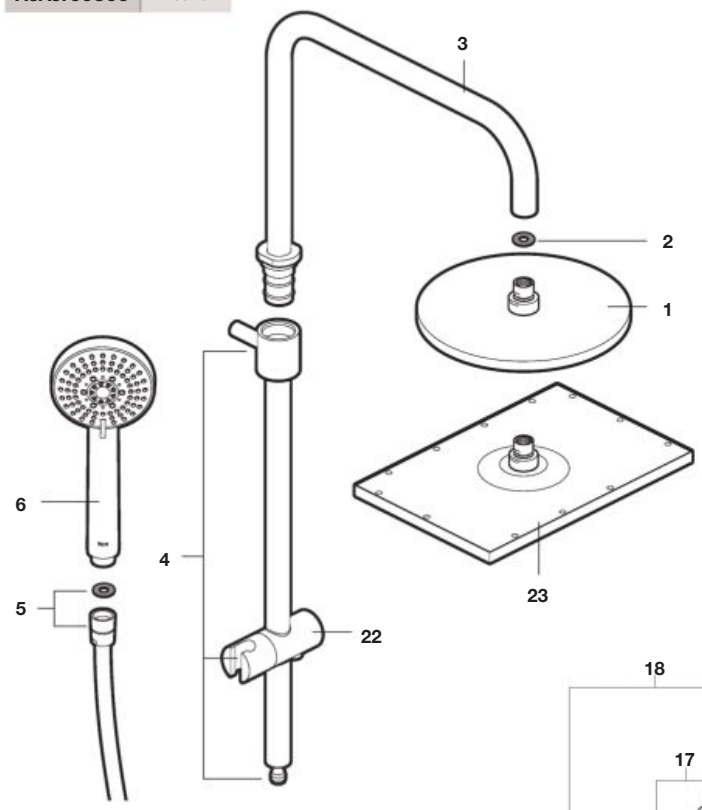

A5A9B90C00 Square

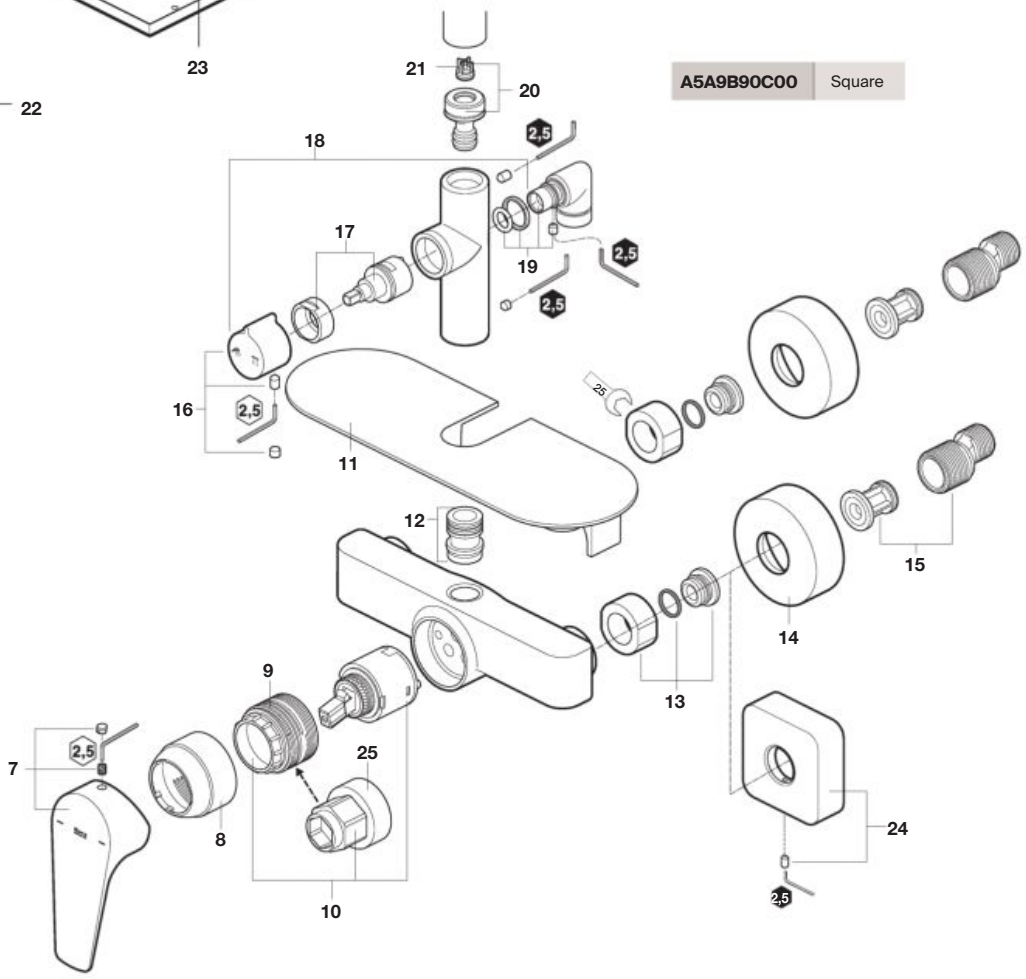

		€
1	**A5B2250C00**	-
2	**AG0056807R**	4,73
3	**AG0082400R**	75,90
4	**AG0138200R**	68,30
5	**A525009900**	52,60
6	**A5B8113C00**	-
7	**AG0116300R**	26,70

		€
8	**AG0116400R**	6,18
9	**AG0054107R**	3,75
10	**AG0110607R**	9,98
11	**AG0138000R**	11,90
12	**AG0073003R**	38,20
13	**A525005200**	15,30
14 2 un	**AG0116800R**	9,26

		€
15 2 un	**AG0156900R**	22,30
16	**AG0138700R**	11,40
17	**AG0138400R**	7,70
18	**AG0138100R**	73,70
19	**AG0138500R**	13,50
20	**AG0138600R**	6,05
21	**AG0138300R**	5,41

		€
22	**AG0087600R**	49,70
23	**A5B3050C00**	-
24	**AG0118500R**	28,80
25	**A525005407**	7,44

Even-M

Columna monomando de baño y ducha / Single-lever shower & bath column

A5A9C90

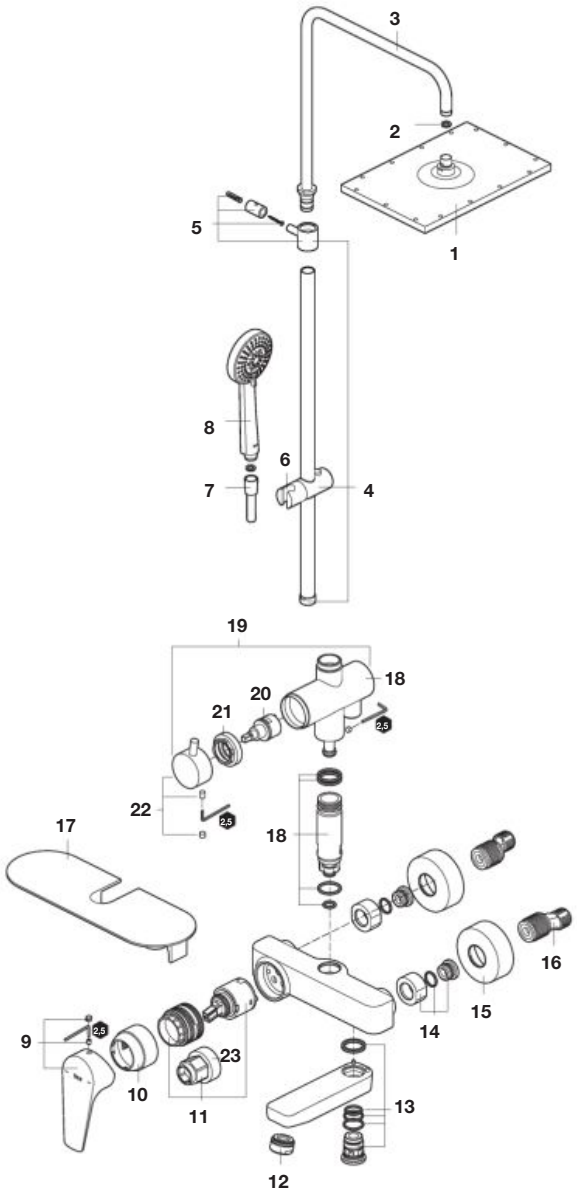

		€
1	**A5B3050C00**	-
2	**AG0056807R**	4,73
3	**AG0082400R**	75,90
4	**AG0227500R**	132,00
5	**AG0087500R**	20,50
6	**AG0087600R**	49,70
7	**A525009900**	52,60

		€
8	**A5B8113C00**	-
9	**AG0116300R**	26,70
10	**AG0116400R**	6,18
11	**AG0110607R**	9,98
12	**AG0029400R**	2,74
13	**AG0187800R**	12,70
14 2 un	**A525005200**	15,30

		€
15 2 un	**AG0116800R**	9,26
16 2 un	**AG0103908R**	17,30
17	**AG0138000R**	11,90
18	**AG0219200R**	42,00
19	**AG0227200R**	170,00
20	**AG0218500R**	15,90
21	**AG0227400R**	14,20

		€
22	**AG0227300R**	7,03
23	**A525005407**	7,44

Vega, Vega Plus

Columna monomando de ducha / Single-lever shower column

A5A976E
A5A9A6E
A5A9B6E
A5A9C6E
A5A9D6E

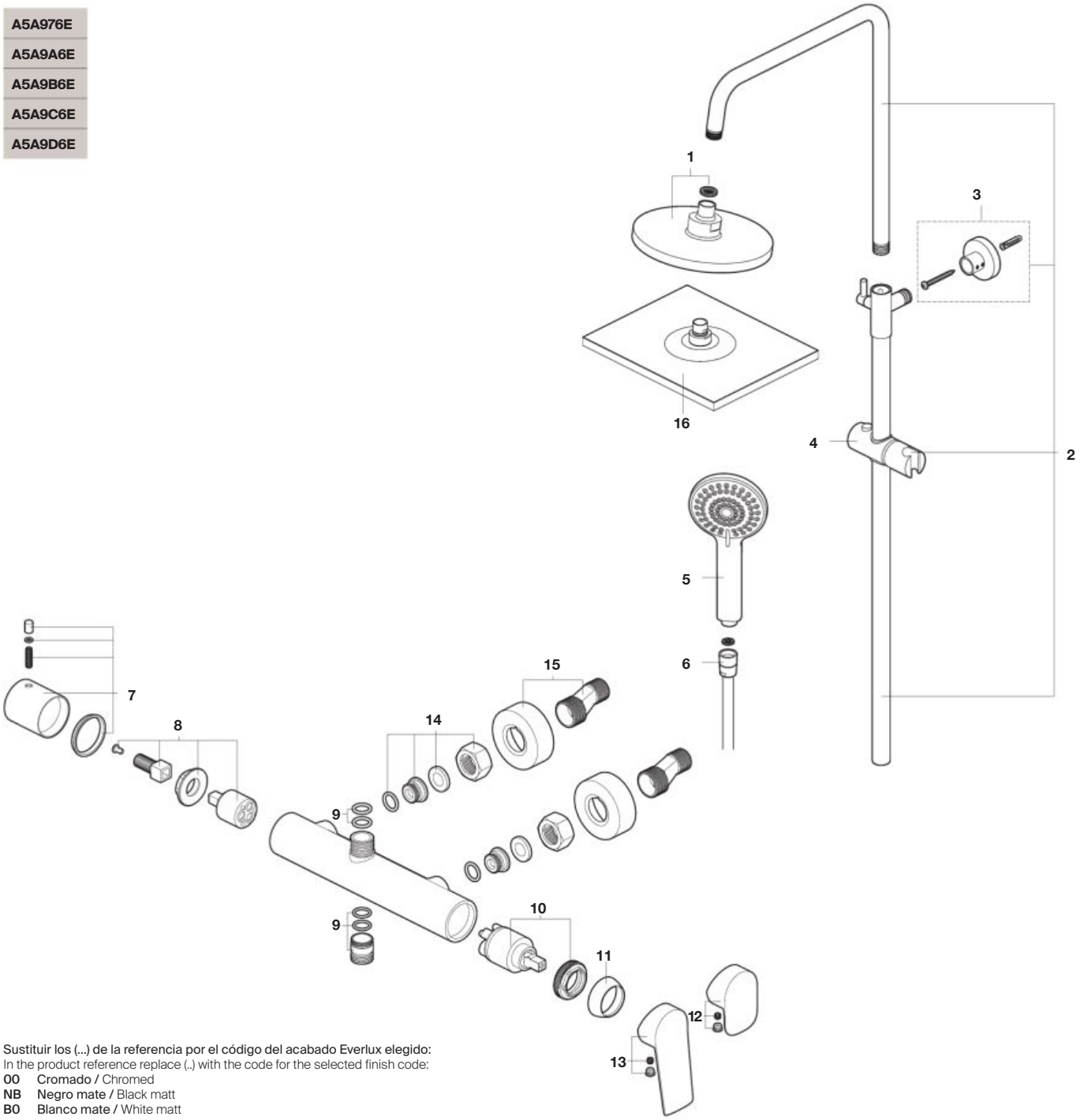

Sustituir los (...) de la referencia por el código del acabado Everlux elegido:
In the product reference replace (..) with the code for the selected finish code:
00 Cromado / Chromed
NB Negro mate / Black matt
B0 Blanco mate / White matt

			€
1	**AG0251500R**	Ø200	25,30
	AG02515NBR		29,40
	AG02515B0R		30,50
	AG0251600R	Ø250	65,80
	AG02516NBR		68,90
	AG02516B0R		78,60
2	**AG0251700R**		65,00
	AG02517NBR		75,30
	AG02517B0R		90,00
3	**AG0251800R**		7,70
	AG02518NBR		8,91
	AG02518B0R		9,50

		€
	AG0251900R	6,44
4	**AG02519NBR**	7,45
	AG02519B0R	8,85
5	**A5B8113C00**	-
	AG0252100R	18,50
6	**AG02521NBR**	20,30
	AG02521B0R	21,10
	AG0252200R	12,00
7	**AG02522NBR**	13,10
	AG02522B0R	14,50
8	**AG0252300R**	12,50

		€
	AG0252400R	9,55
9	**AG02524NBR**	10,40
	AG02524B0R	11,60
10	**AG0252500R**	11,20
	AG0252600R	2,62
11	**AG02526NBR**	2,92
	AG02526B0R	3,27
	AG0252700R	9,58
12	**AG02527NBR**	10,50
	AG02527B0R	11,80

			€
	AG0252800R		12,40
13	**AG02528NBR**		13,90
	AG02528B0R		15,80
	AG0252900R		3,59
14	**AG02529NBR**		3,88
	AG02529B0R		4,24
	AG0253000R		10,10
15	**AG02530NBR**		11,50
	AG02530B0R		13,20
16	**AG0272000R**	250x250	70,60
	AG02720NBR		77,70

L-20

Columna para ducha monomando / Single-lever shower column

A5A9709

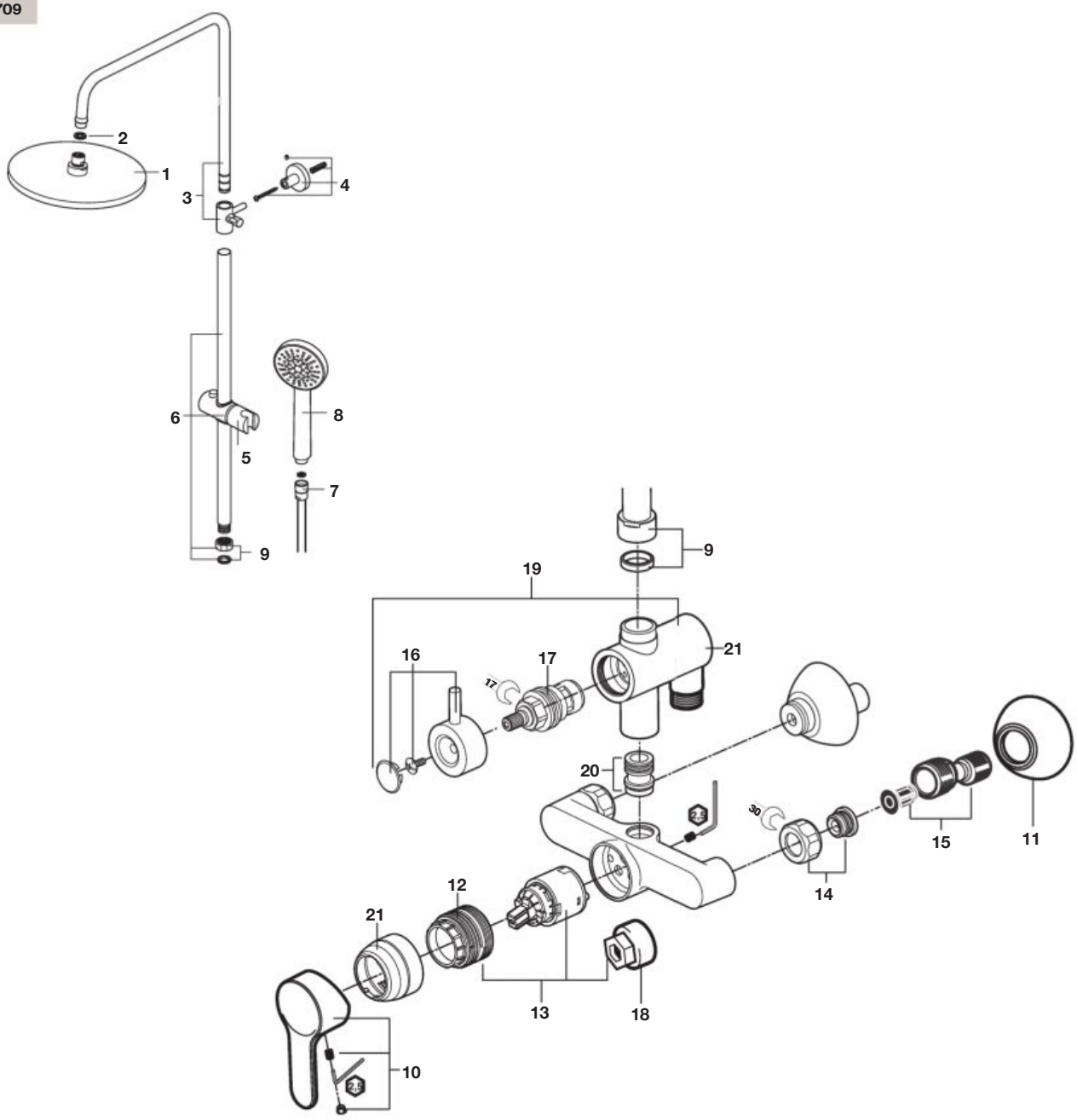

		€
1	**AG0087300R**	125,00
2	**AG0056807R**	4,73
3	**AG0220400R**	58,90
4	**AG0220700R**	8,09
5	**AG0220600R**	20,30

		€
6	**AG0220300R**	42,90
7	**A525009800**	27,10
8	**A5B9103C00**	-
9	**AG0220500R**	3,50
10	**AG0032400R**	20,20

		€
11	**AG0085400R**	8,41
12	**AG0054107R**	3,75
13	**AG0053707R**	39,20
14	**AG0002500R**	15,60
15	**AG0103908R**	17,30

		€
16	**AG0220100R**	4,27
17	**AG0220200R**	6,42
18	**A525005407**	7,44
19	**AG0220000R**	45,80
20	**AG0073003R**	38,20

		€
21	**AG0085300R**	18,00

Victoria-Monomando Plus

Columna para ducha / Shower column

A5A9A25

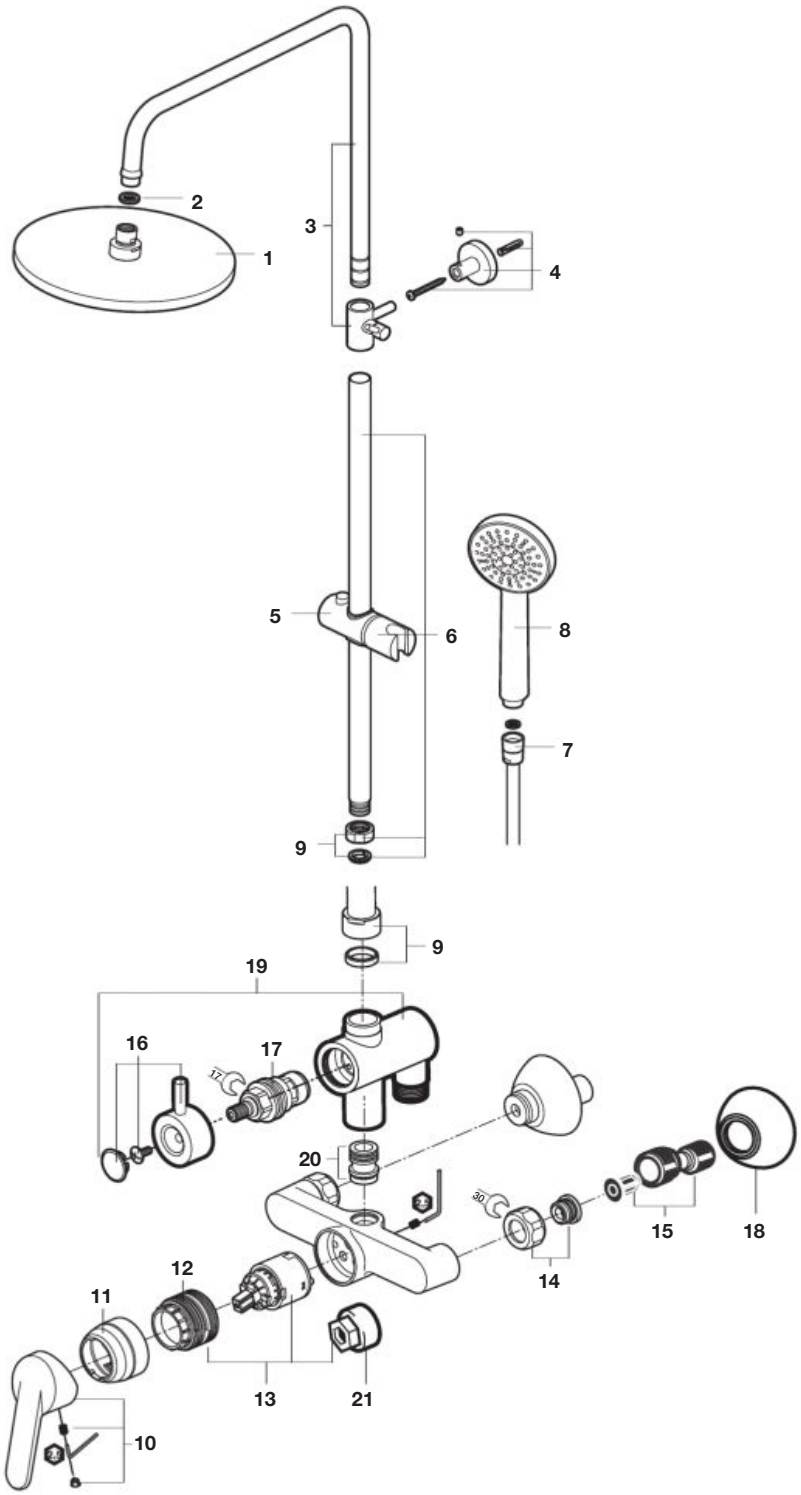

		€
1	**AG0087300R**	125,00
2	**AG0056807R**	4,73
3	**AG0220400R**	58,90
4	**AG0220700R**	8,09
5	**AG0220600R**	20,30
6	**AG0220300R**	42,90

		€
7	**A525009800**	27,10
8	**A5B9103C00**	-
9	**AG0220500R**	3,50
10	**AG0003400R**	28,50
11	**AG0085300R**	18,00
12	**AG0054107R**	3,75

			€
13	**AG0077807R**		42,10
14	**AG0002500R**	2 un	15,60
15	**AG0103908R**	2 un	17,30
16	**AG0220100R**		4,27
17	**AG0220200R**		6,42
18	**AG0085400R**	2 un	8,41

		€
19	**AG0220000R**	45,80
20	**AG0073003R**	38,20
21	**AG0018907R**	26,50

Victoria-Monomando Plus

Columna para ducha / Shower column

A5A9A25

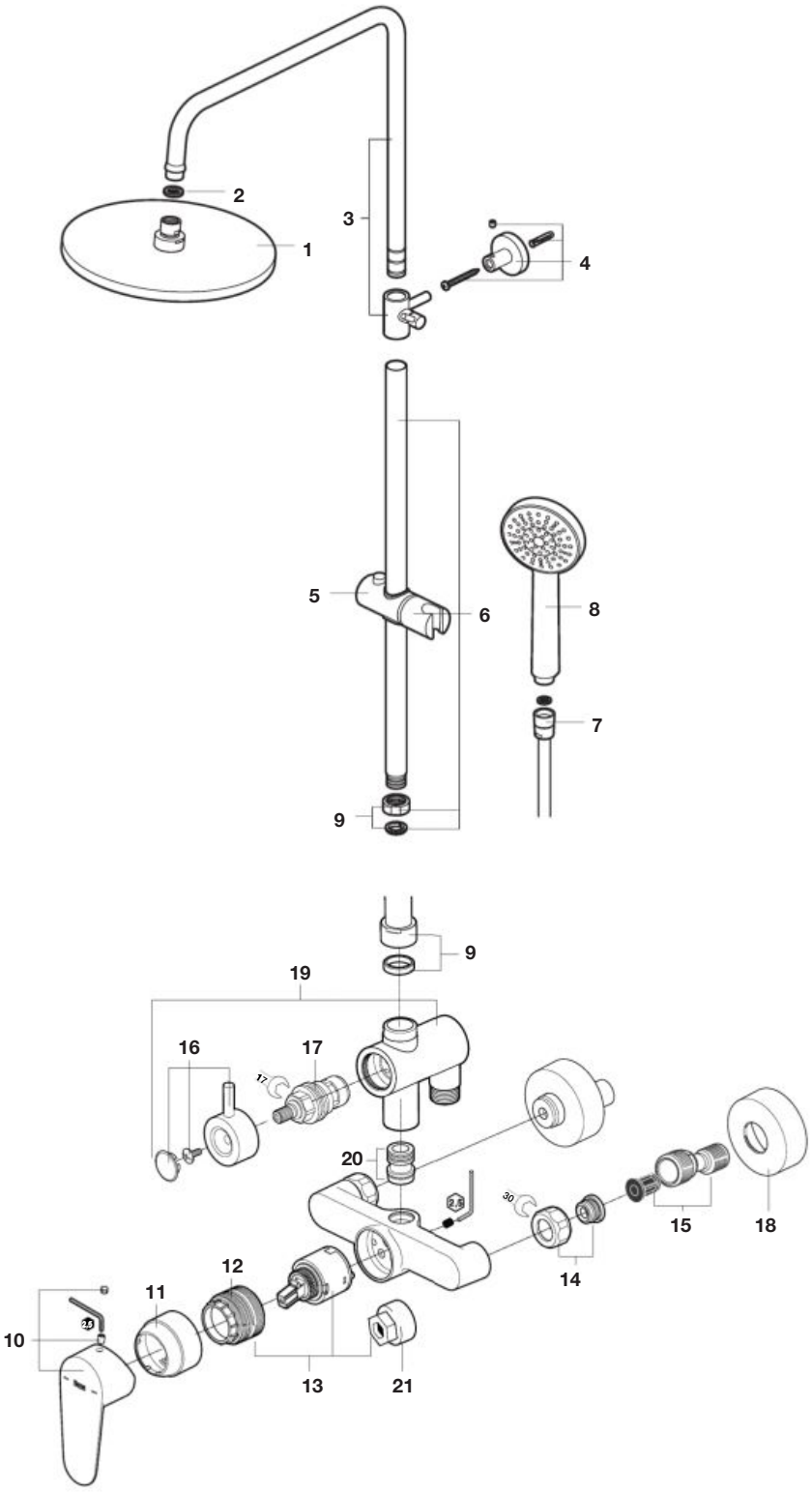

		€
1	**A5B2250C00**	-
2	**AG0056807R**	4,73
3	**AG0220400R**	58,90
4	**AG0220700R**	8,09
5	**AG0220600R**	20,30
6	**AG0220300R**	42,90

		€
7	**A525009800**	27,10
8	**A5B9103C00**	-
9	**AG0220500R**	3,50
10	**AG0241400R**	17,10
11	**AG0116400R**	6,18
12	**AG0054107R**	3,75

		€
13	**AG0110607R**	9,98
14	**AG0002500R**	15,60
15	**AG0103908R**	17,30
16	**AG0220100R**	4,27
17	**AG0220200R**	6,42
18	**AG0116800R**	9,26

		€
19	**AG0220000R**	45,80
20	**AG0073003R**	38,20
21	**A525005407**	7,44

Victoria Monomando Basic

Columna monomando / Single-lever column

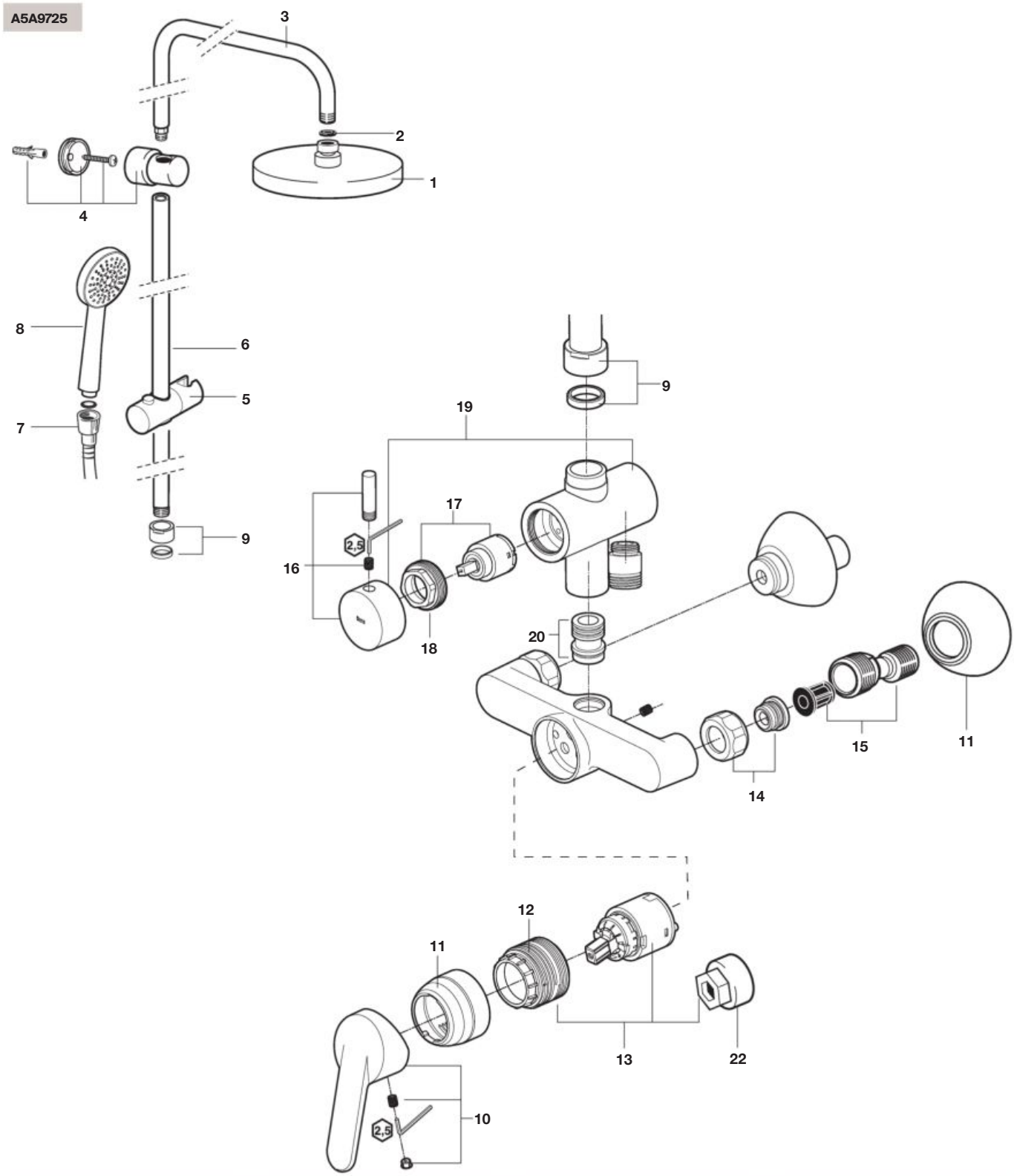

		€
1	**AG0087300R**	125,00
2	**AG0056807R**	4,73
3	**AG0041400R**	76,30
4	**AG0041300R**	40,40
5	**AG0041500R**	15,90
6	**AG0041200R**	52,70

			€
7	**A525009800**		27,10
8	**A5B9103C00**		-
9	**AG0056300R**		6,83
10	**AG0003400R**		28,50
11	**AG0085400R**	2 un	8,41
12	**AG0054107R**		3,75

			€
13	**AG0077807R**		42,10
14	**AG0002500R**	2 un	15,60
15	**A525005308**	2 un	13,50
16	**AG0073100R**		8,86
17	**AG0073207R**		24,10
18	**AG0073303R**		3,97

		€
19	**AG0077300R**	114,00
20	**AG0073003R**	38,20
22	**A525005407**	7,44

Victoria Monomando Basic

Columna monomando / Single-lever column

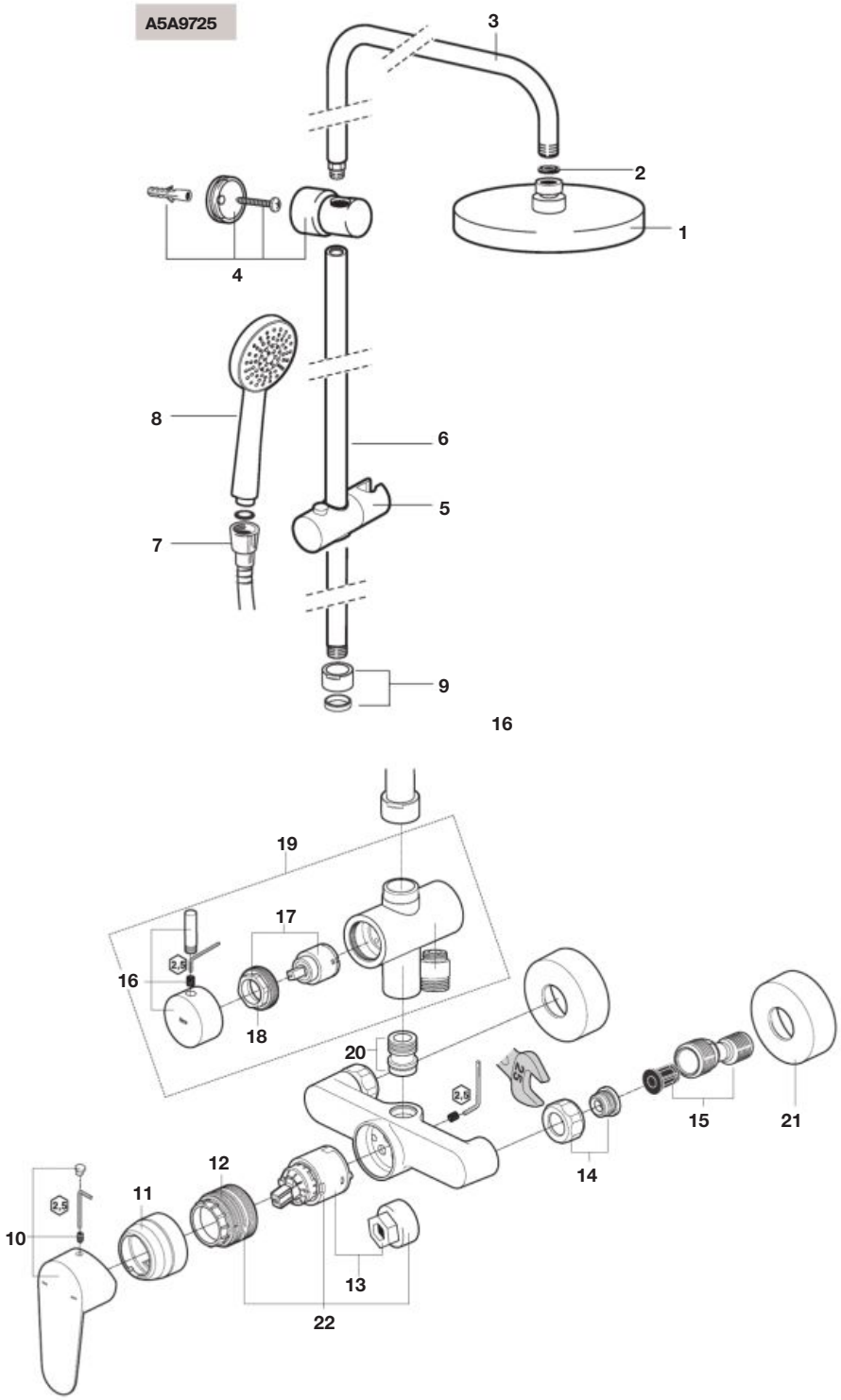

			€
1	**AG0087300R**	(Ø 200 mm)	125,00
	A5B2250C00	(Ø 254 mm)	-
2	**AG0056807R**		4,73
3	**AG0232200R**		47,70
4	**AG0041300R**		40,40
5	**AG0041500R**		15,90

		€
6	**AG0041200R**	52,70
7	**A525009800**	27,10
8	**A5B9103C00**	-
9	**AG0056300R**	6,83
10	**AG0241400R**	17,10
11	**AG0116400R**	6,18

			€
12	**AG0054107R**		3,75
13	**AG0053707R**		39,20
14	**AG0002500R**	2 un	15,60
15	**AG0103908R**	2 un	17,30
16	**AG0073100R**		8,86
17	**AG0073207R**		24,10

			€
18	**AG0073303R**		3,97
19	**AG0077300R**		114,00
20	**AG0073003R**		38,20
21	**AG0085400R**	2 un	8,41
22	**AG0077807R**		42,10

Deck M, Deck S

Columna monomando para ducha / Single-lever shower column

A5A9A88C00
A5A2088C00

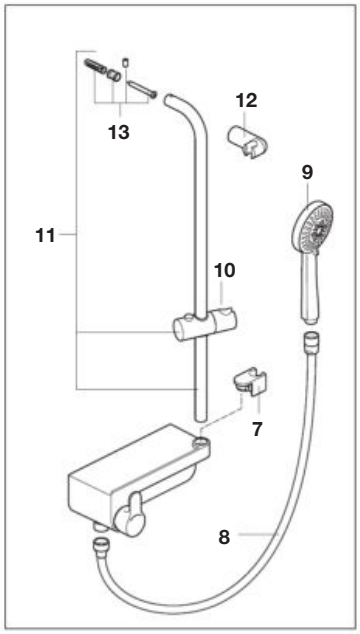

A5A2B88C00

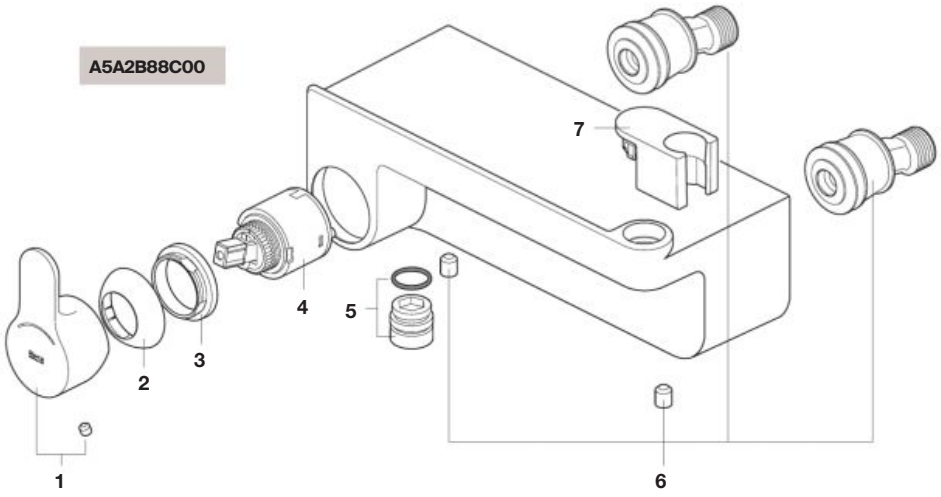

		€
1	**AG0118600R**	20,90
2	**AG0032100R**	27,90
3	**A525027803**	32,40

		€
4	**AG0110607R**	9,98
5	**A525024200**	9,74
6	**AG0118703R**	53,60

		€
7	**AG0118800R**	7,71
8	**A525009900**	52,60
9	**A5B8113C00**	-

		€
10	**AG0041500R**	15,90
11	**AG0118900R**	123,00
12	**AG0003700R**	13,70

		€
13	**AG0119003R**	36,20

Victoria-C

Columna conectable / Connection column

A5B9M61..0

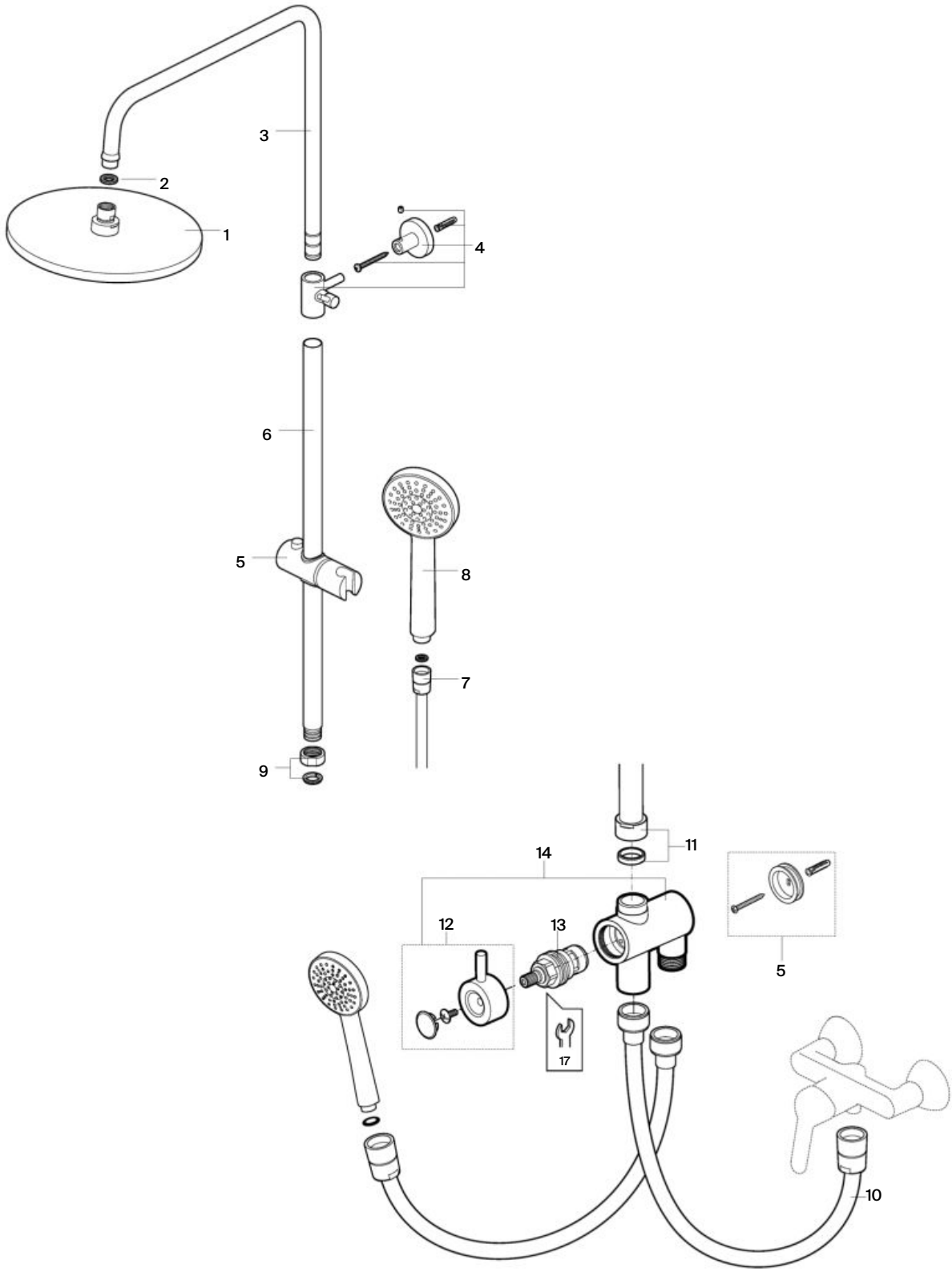

			€
1		**AG0087300R**	125,00
2	5 un	**AG0056807R**	4,73
3		**AG0220400R**	58,90
4		**AG0221700R**	9,89

		€
5	**AG0083803R**	8,48
6	**AG0220300R**	42,90
7	**A525009800**	27,10
8	**A5B9103C00**	-

		€
9	**AG0041500R**	15,90
10	**AG0084000R**	22,00
11	**AG0056300R**	6,83
12	**AG0220100R**	4,27

		€
13	**AG0220200R**	6,42
14	**AG0253400R**	50,00

Loft

Columna de ducha / Shower column

A5A9743C00

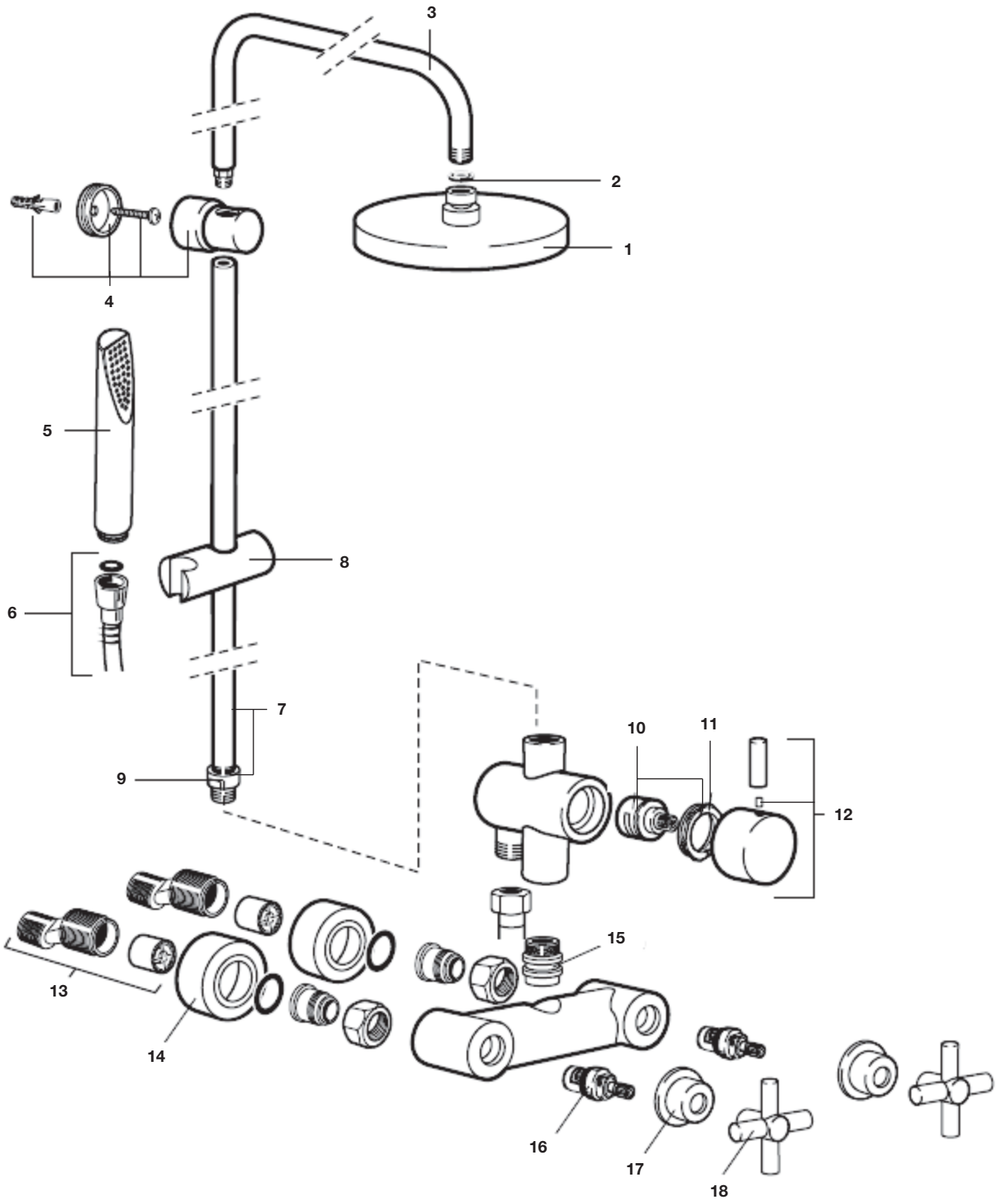

		€
1	**AG0087300R**	125,00
2	**AG0056807R**	4,73
3	**AG0041400R**	76,30
4	**AG0041300R**	40,40
5	**A5B9147C00**	29,00

		€
6	**A525009800**	27,10
7	**A504251000**	57,20
8	**AG0041500R**	15,90
9	**AG0056300R**	6,83
10	**AG0073207R**	24,10

			€
11	**AG0073303R**		3,97
12	**AG0073100R**		8,86
13	**AG0190300R**		2,82
14	**AG0190400R**	2 un	7,58
15	**AG0190500R**		3,92

		€
16	**AG0190600R**	21,50
17	**AG0190700R**	15,60
18	**AG0190800R**	31,20

Victoria Connect

Columna conectable / Connection column

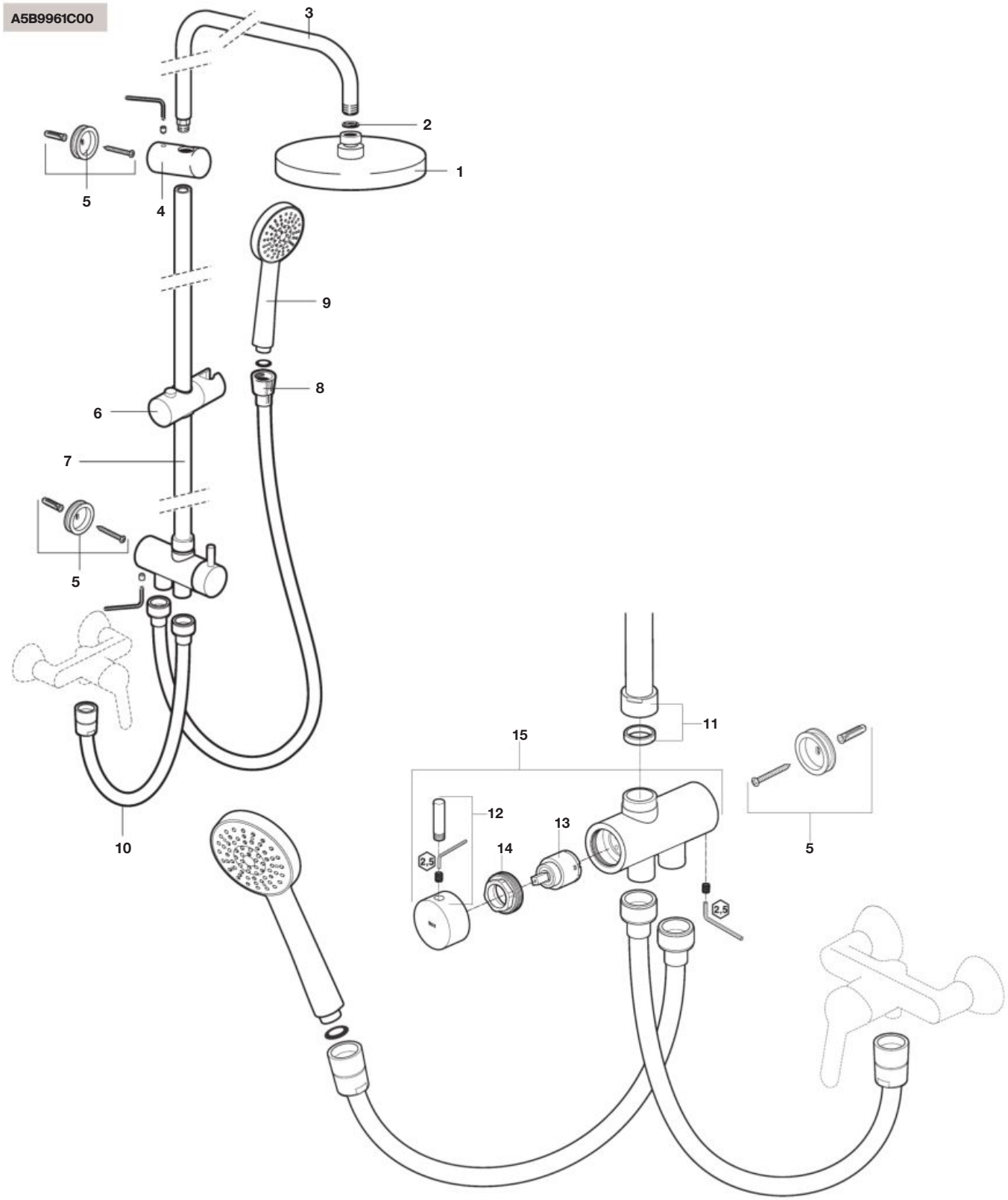

		€
1	**AG0087300R**	125,00
2	**AG0056807R**	4,73
3	**AG0041400R**	76,30

		€
4	**AG0109400R**	29,40
5	**AG0083803R**	8,48
6	**AG0041500R**	15,90

		€
7	**AG0083900R**	47,40
8	**A5250098C0**	27,10
9	**A5B9103C00**	-

		€
10	**AG0084000R**	22,00
11	**AG0056300R**	6,83
12	**AG0073100R**	8,86

		€
13	**AG0073207R**	24,10
14	**AG0073303R**	3,97
15	**AG0116000R**	127,00

Carmen

Columna de ducha bimando / Twin-handle shower column

A5A974B

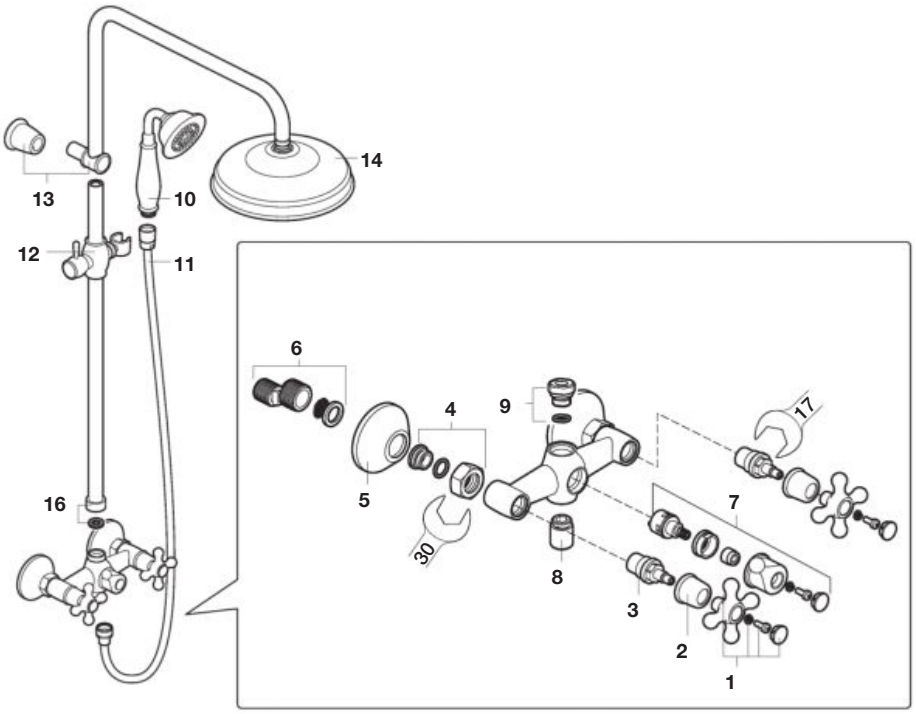

A5A9A4B

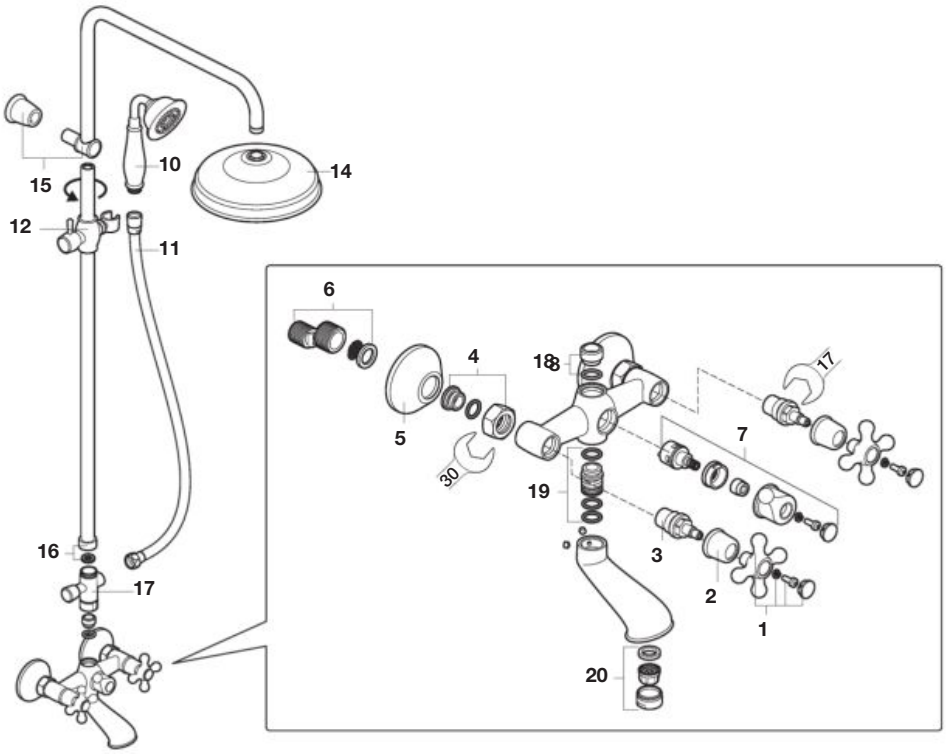

		€
1	**AG0167900R**	23,80
2	**AG0166100R**	9,74
3	**AG0166200R**	19,90
4	**AG0168200R**	18,20

		€
5	**AG0168300R**	17,40
6	**AG0168400R**	21,50
7	**AG0168000R**	32,90
8	**AG0191200R**	10,60

		€
9	**AG0191300R**	8,95
10	**A5B114BC00**	-
11	**AG0168700R**	20,00
12	**AG0191400R**	53,20

		€
13	**AG0191500R**	53,00
14	**A5B3350C00**	-
15	**AG0191600R**	60,20
16	**AG0191700R**	5,67

		€
17	**AG0191800R**	37,30
18	**AG0191900R**	9,08
19	**AG0168500R**	6,02
20	**AG0168100R**	10,70

Eternal

Columna de hidromasaje / Hydromassage column

A5A978BC00

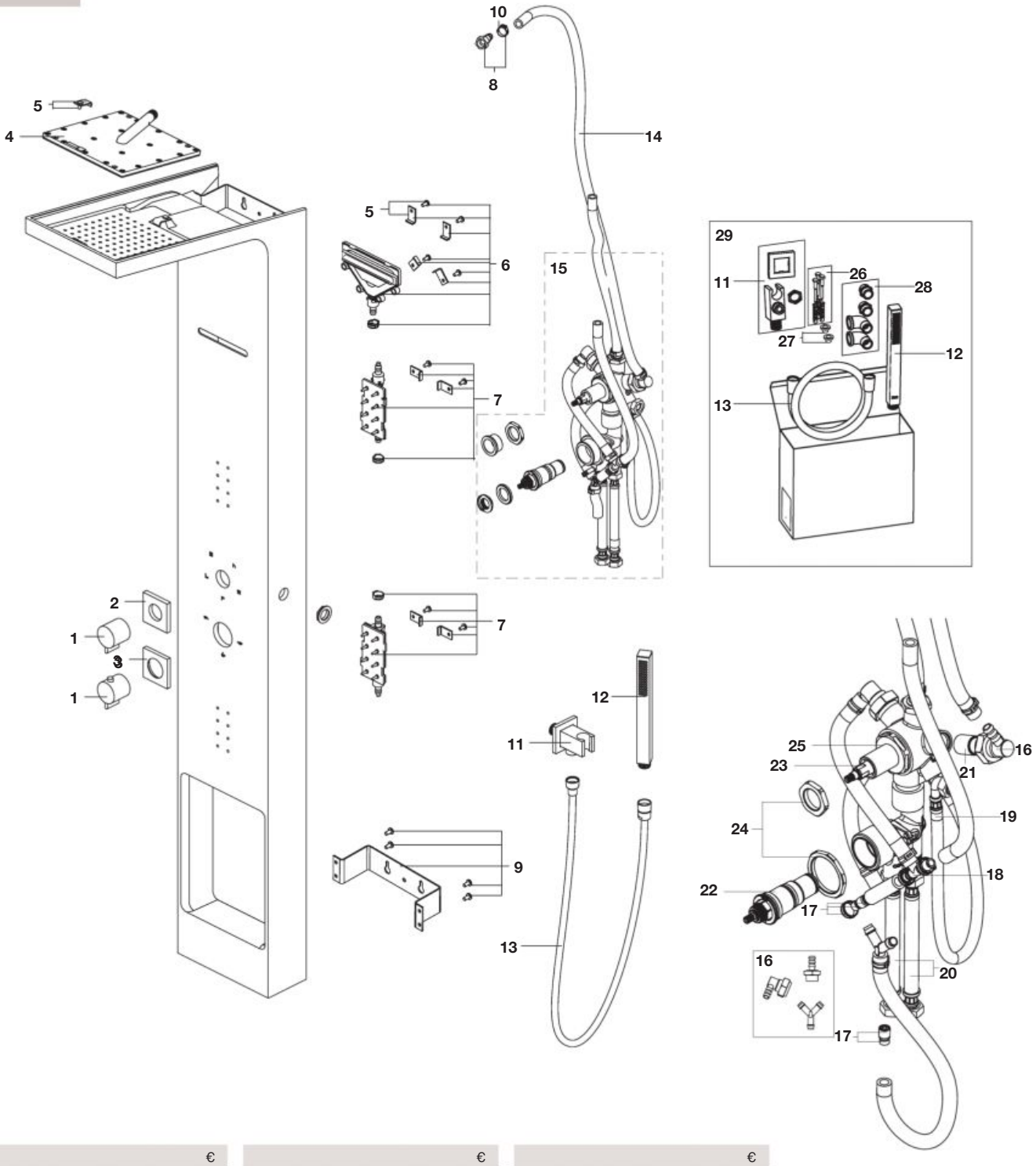

			€
1		**AD0007900R**	121,00
2		**AD0007200R**	29,30
3		**AD0008000R**	28,30
4		**AD0003400R**	71,20
5	4 un	**AD0007300R**	12,40
6		**AD0007600R**	66,00
7		**AD0007700R**	38,50
8		**AD0007800R**	39,70
9		**AD0007500R**	26,50
10		**AD0002800R**	4,97

			€
11		**A5B0850C00**	-
12		**A5B9L61C00**	-
13		**A525009900**	52,60
14	1 m	**AE0009200R**	5,07
15		**AD0008400R**	N.D.
16		**AC0006100R**	20,00
17		**AD0008500R**	8,12
18		**AD0002700R**	12,70
19		**AD0008600R**	13,10
20		**AD0008700R**	16,10

		€
21	**AD0008800R**	35,00
22	**AD0006307R**	106,00
23	**AD0009000R**	112,00
24	**AD0009100R**	56,00
25	**AD0009200R**	87,00
26	**AD0008300R**	1,95
27	**AG0016007R**	3,50
28	**AD0008900R**	14,30
29	**AD0008100R**	166,00

Essential

Columna de hidromasaje termostática / Hydromassage thermostatic column

A2H0417000

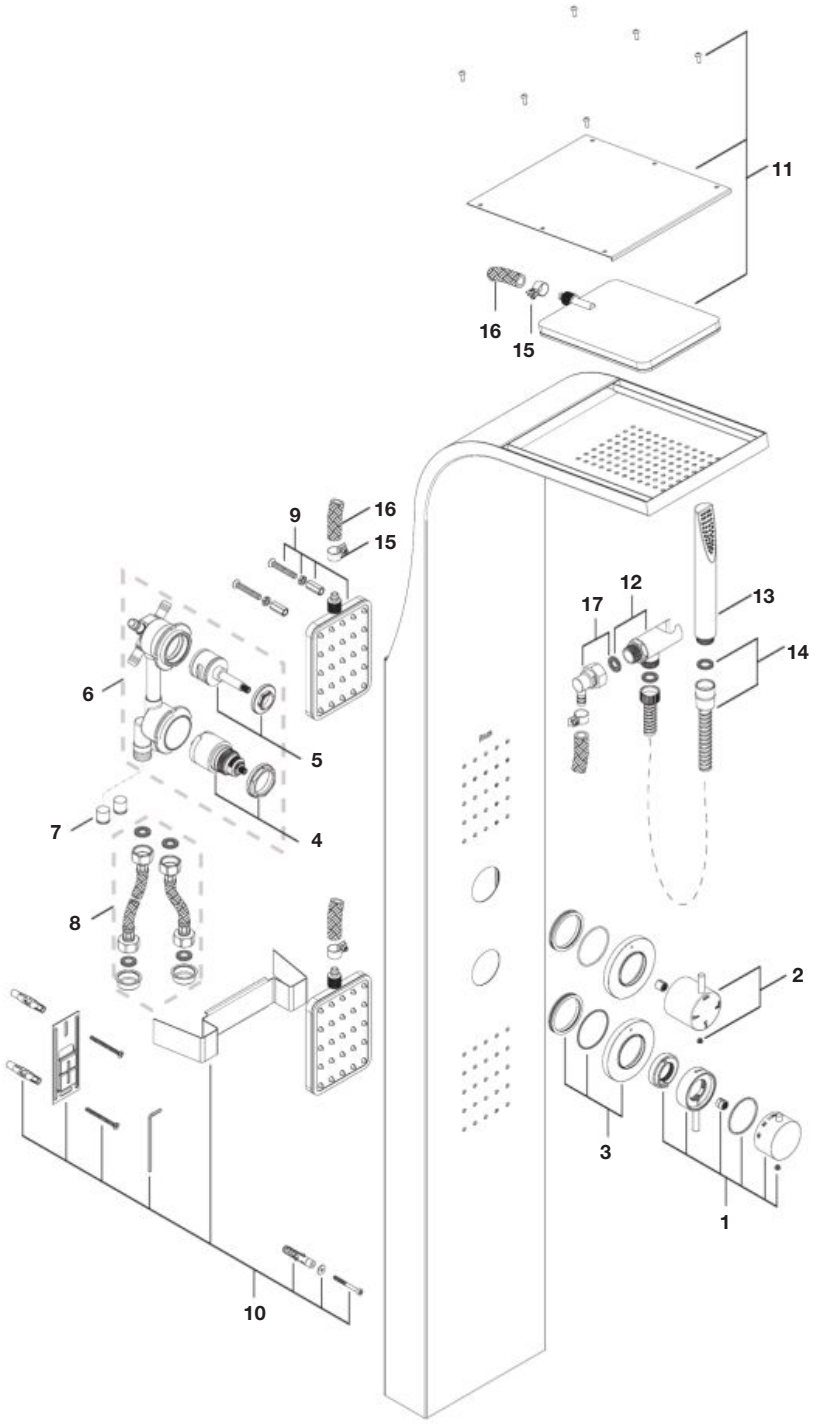

		€
1	**AC0015400R**	167,00
2	**AC0015300R**	107,00
3	**AC0016100R**	77,30
4	**AC0016600R**	210,00

		€
5	**AC0016500R**	70,80
6	**AC0016300R**	417,00
7	**AC0016400R**	16,70
8	**AC0015900R**	64,30

		€
9	**AC0015800R**	102,00
10	**AC0016200R**	70,80
11	**AC0015700R**	N.D.
12	**AC0016000R**	72,20

		€
13	**A5B9047C00**	-
14	**AG0062200R**	54,30
15	**AC0016800R**	14,10
16	**AE0009200R**	5,07

		€
17	**AC0015500R**	19,50

Essential 2.0

Columna de hidromasaje termostática / Hydromassage thermostatic column

A2H0423000

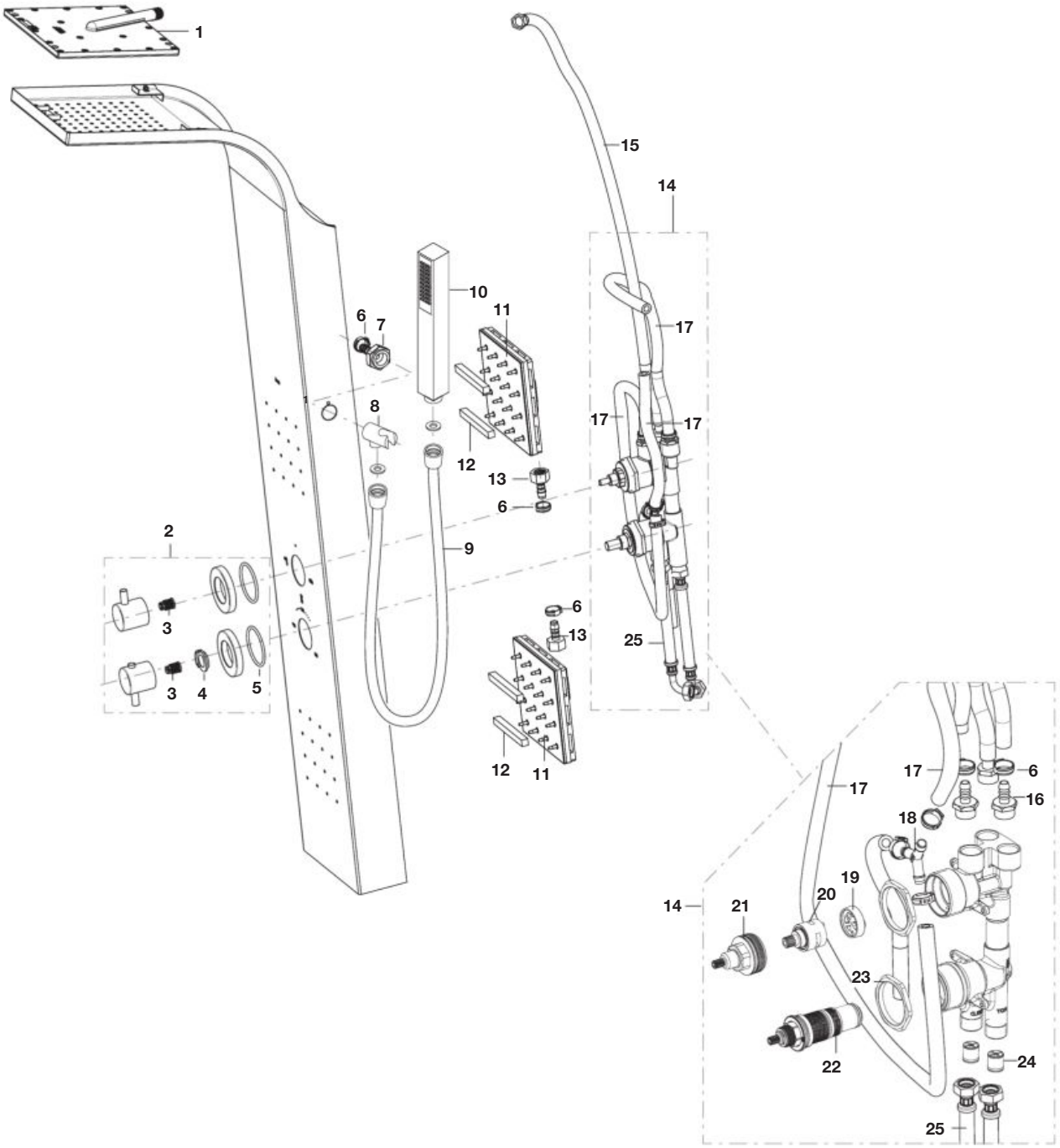

			€
1		**AD0003400R**	71,20
2		**AD0005700R**	97,70
3	2 un	**AD0006407R**	12,50
4			
5	2 un		
6	3 un	**AC0006100R**	20,00
7			
18			

			€
6	5 un	**AD0002800R**	4,97
8		**AD0004900R**	15,90
9		**A525009800**	27,10
10		**AD0001800R**	35,80
11		**AD0003600R**	66,50
12	4 un	**AD0005507R**	4,35
13	2 un	**AD0003700R**	4,48
14		**AD0005603R**	287,00

			€
15		**AD0004200R**	17,50
16	2 un	**AD0003100R**	3,32
17	1,5m	**AE0009200R**	5,07
6	2 un		
19		**AD0006107R**	29,20
20			
21		**AD0006203R**	25,00
3			

			€
22		**AD0006307R**	106,00
3			
23	2 un	**AD0006003R**	10,90
24	2 un	**AD0005907R**	24,70
25	2 un	**AD0005809R**	25,20

Evolution

Columna de hidromasaje termostática completa / Hydromassage thermostatic column

A2H0416000

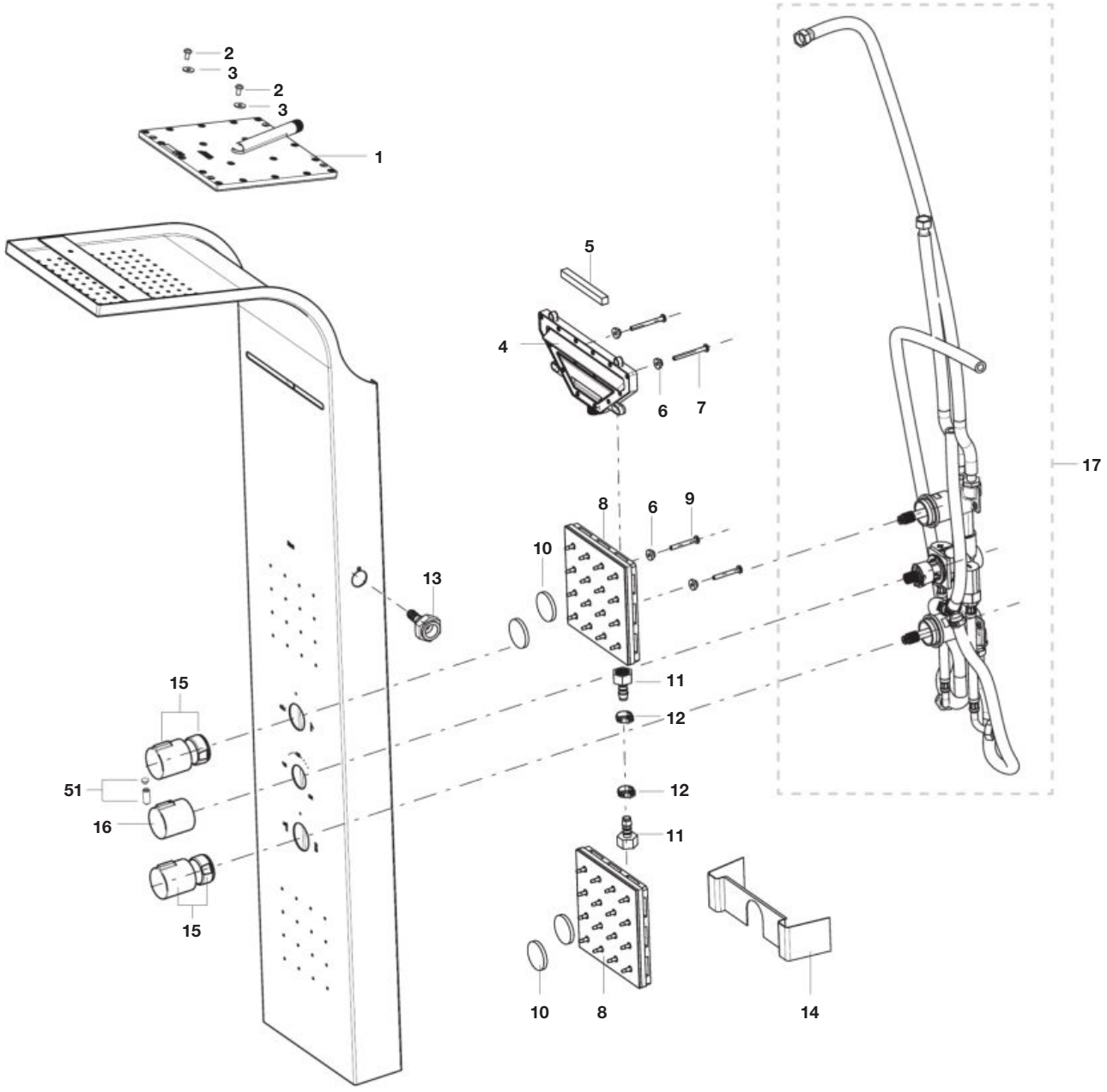

			€
1			
2	2 un	**AD0003400R**	71,20
3	2 un		
4			
5		**AD0003500R**	72,30
6	2 un		
7	2 un		
6	2 un		
8		**AD0003600R**	66,50
9	2 un		
10	2 un		
11	2 un	**AD0003700R**	4,48
12	2 un		

			€
12		**AC0006100R**	20,00
13			
14		**AD0003800R**	15,90
15	2 un	**AD0003900R**	74,00
16		**AG0039500R**	38,50
17		**AD0004000R**	582,00
2			
3			
6	4 un	**AD0004100R**	6,72
7	2 un		
9	2 un		
51	2 un	**AG0095000R**	3,65

Evolution

Circuito hidráulico / Hydraulic circuit

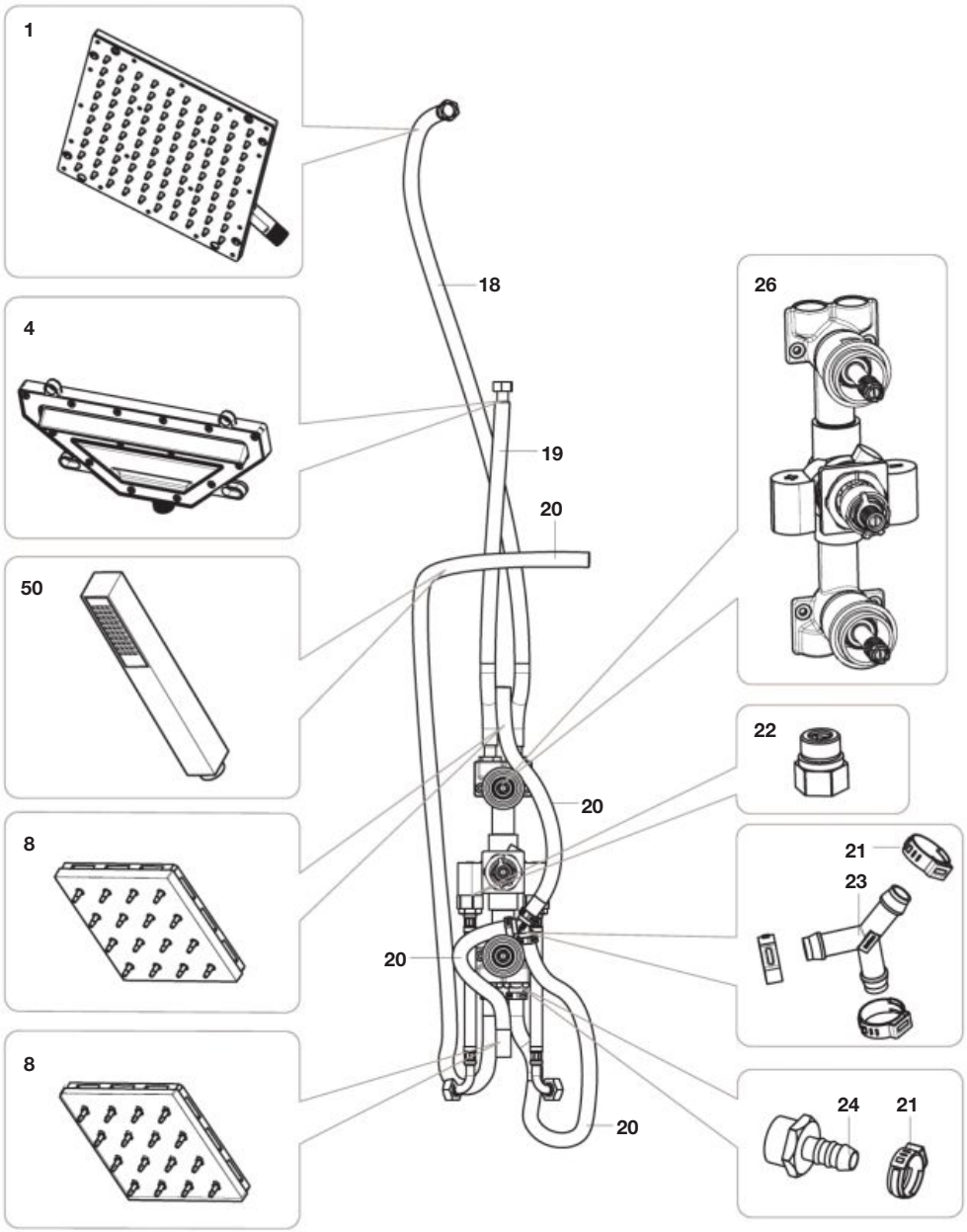

			€
1		**AD0003400R**	71,20
4		**AD0003500R**	72,30
8		**AD0003600R**	66,50
18		**AD0004000R**	582,00
19			
20	1,80m		
21	5 un		
22	2 un		
23			
24	2 un		
25	2 un		
26			

			€
18		**AD0004200R**	17,50
19			
20	1m	**AE0009200R**	5,07
21	2 un		
21	4 un	**A2R0179000**	7,24
26		**AD0004300R**	485,00
22	2 un	**AC0008100R**	19,20
23		**AC0006100R**	20,00
21	3 un		
24	2 un	**AD0003100R**	3,32
21	2 un		
50		**AD0004600R**	100,00

Evolution

Grifería / Faucet

			€
26		**AD0004300R**	485,00
27		**A525012503**	33,20
28			
28		**AG0038503R**	15,30
29	2 un	**AD0004400R**	57,20
30	2 un		
31	2 un		
32	2 un		
33	2 un	**AD0004500R**	68,20
34		**A525028003**	81,70
35			
36		**AG0012303R**	5,18
30			
31			
37		**AD0005000R**	4,03
30			
31			

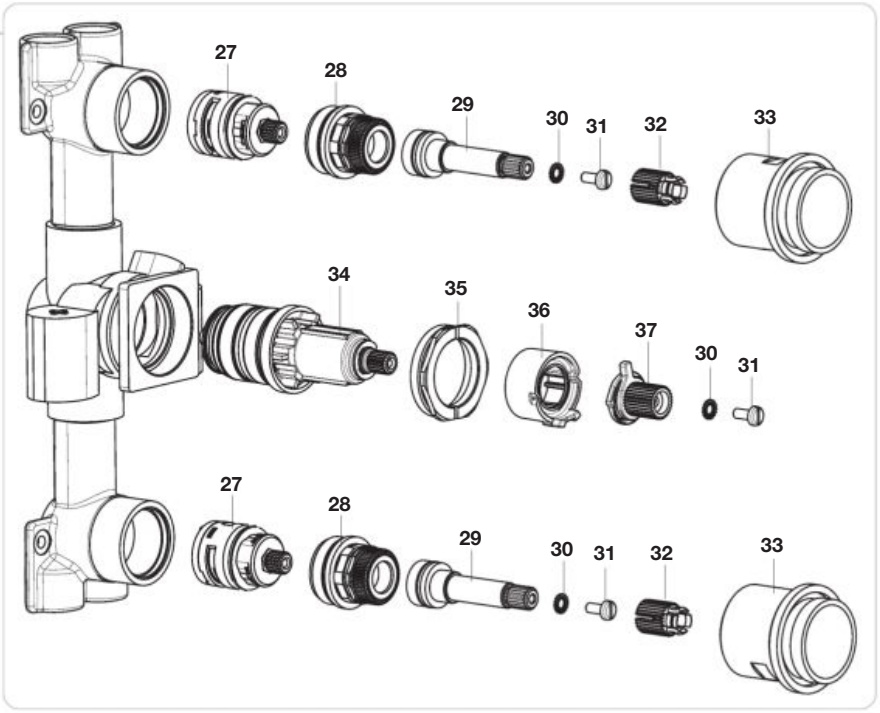

Caja accesorios / Accesories box

			€
38	3 un	**AD0004600R**	100,00
39			
40			
41			
42	3 un		
43			
44	2 un		
45			
46			
47			
48			
49			
50			
38	3 un	**AD0004700R**	8,48
39			
40			
41			
42	3 un		
44	2 un		
45			
46			
44	2 un	**AG0016007R**	3,50
47			
38	3 un	**AD0004800R**	16,10
42	3 un		
48	3 un	**AD0004900R**	15,90
43			
45			
46			
49		**A525009800**	27,10
50		**AD0001800R**	35,80

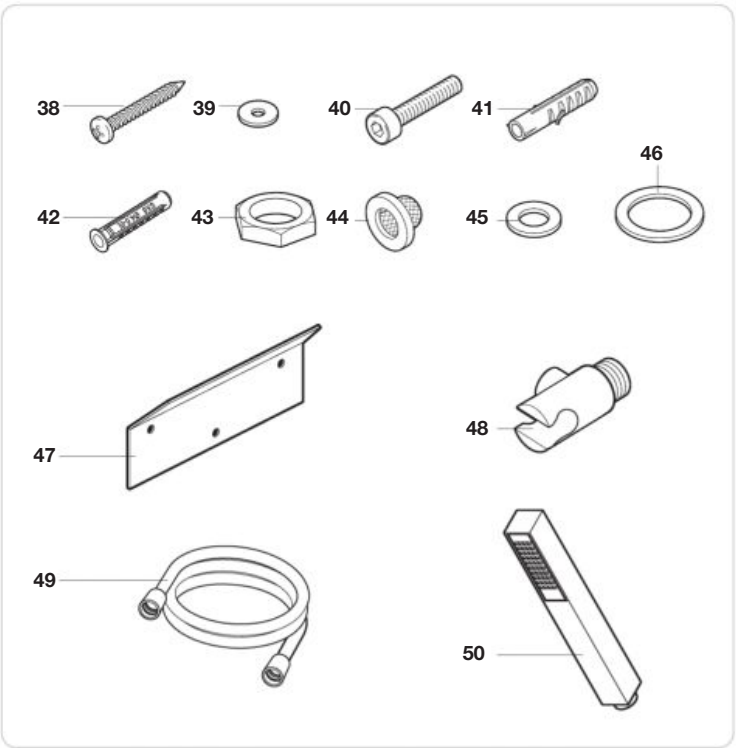

Flat

Columna de hidromasaje completa / Complete hydromassage column

A2H0393000

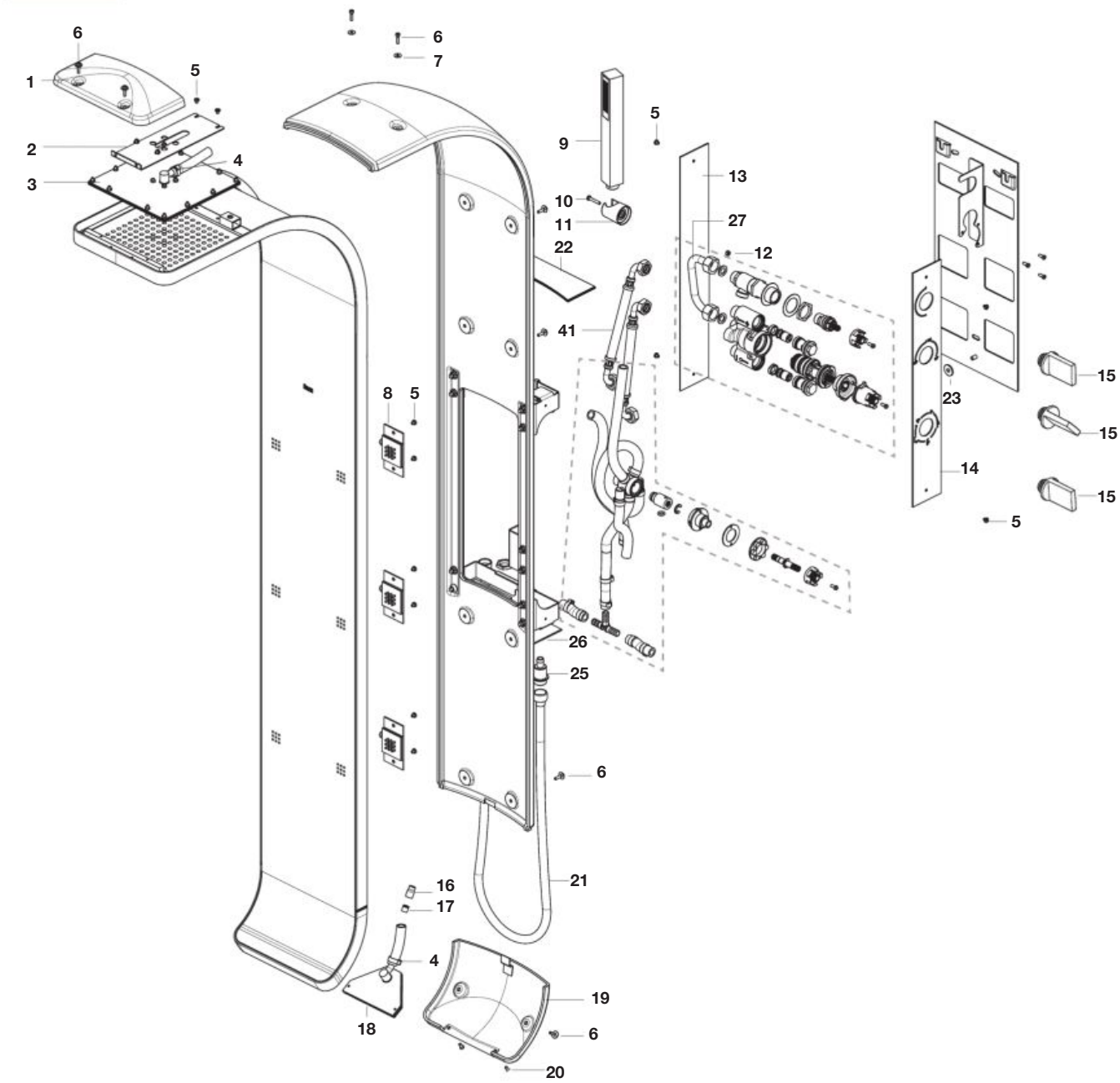

			€
3		**AD0002100R**	490,00
6	2 un		
7	2 un		
1		**AD0003300R**	86,20
2			
4			
5	4 un		
6	2 un		
7	2 un		
8		**AD0002200R**	N.D.
5	2 un		
10		**AD0001000R**	3,77
11			
12			

			€
13		**AD0000800R**	N.D.
5	2 un		
14		**AD0000900R**	2,25
5	2 un		
4		**AD0002000R**	290,00
6	2 un		
7	2 un		
16			
17			
18			
19			
20	2 un		
22		**AD0001700R**	71,70
5	2 un		

			€
41	2 un	**AD0001400R**	18,20
9		**AD0001800R**	35,80
15		**AD0001900R**	36,00
21		**A525009900**	52,60
5	2 un	**AD0000700R**	5,49
6	12 un		
7	12 un		
20	2 un		
23	2 un	**AD0001600R**	2,67
25		**AD0002600R**	N.D.
26		**AD0002500R**	N.D.
5	2 un		

Flat

Grifería / Faucet

			€
27			
28	2 un	**AD0001100R**	17,00
29			
30			
31		**AD0001200R**	21,20
32			
33			
34			
34	2 un		
35			
36	2 un		
37		**AD0001300R**	123,00
38			
39			
40			

			€
37			
38		**A525028003**	81,70
32		**A525092709**	73,20
36	2 un	**A525018003**	87,70
38		**AG0020703R**	22,60
33	2 un		
34	3 un	**AD0002300R**	6,10
39			
40			

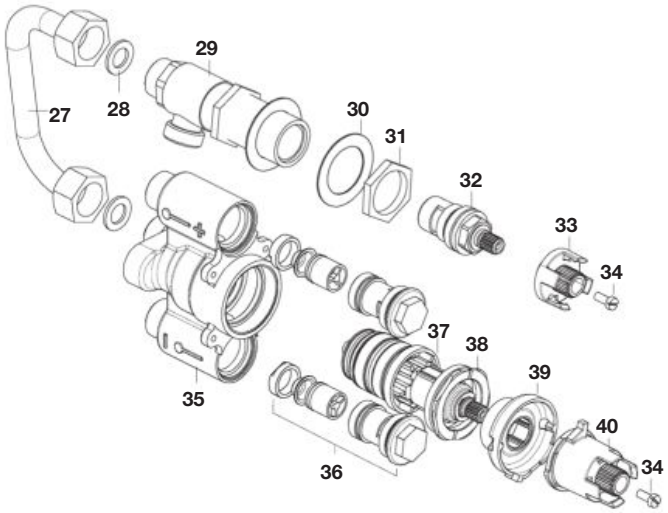

Circuito mangueras / Hoses circuit

			€
4	6 un	**AD0002800R**	4,97
45		**AE0009200R**	5,07
46		**AE0009200R**	5,07
33			
34			
47			
49			
50		**AD0002400R**	152,00
51			
52			
53			
54			
55			
33	2 un	**AD0002300R**	6,10
34	3 un		
48	4 un	**AD0002700R**	12,70

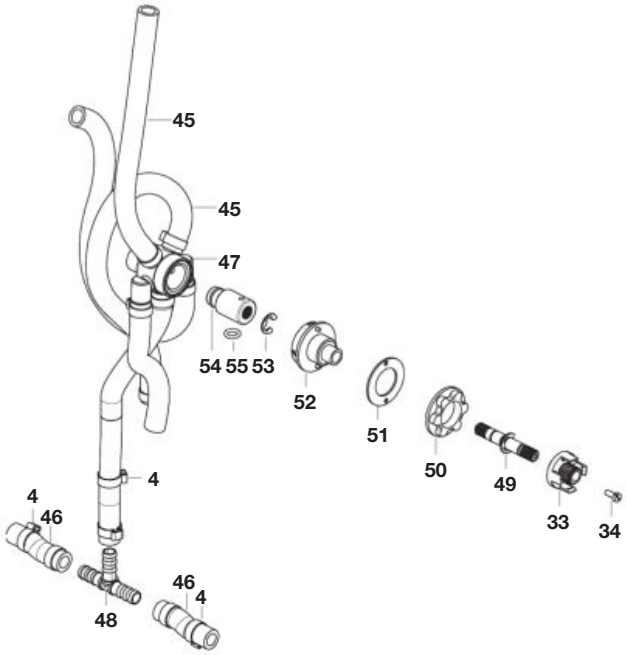

Caja accesorios / Accesories box

			€
9			
15	3 un		
21			
22			
24	3 un	**AD0000600R**	182,00
42	3 un		
43	2 un		
44			
22		**AD0001700R**	71,70
9		**AD0001800R**	35,80
15		**AD0001900R**	36,00
21		**A525009900**	52,60
24	3 un		
42	3 un	**AD0001600R**	2,67
43	2 un		
44		**AD0001500R**	15,00

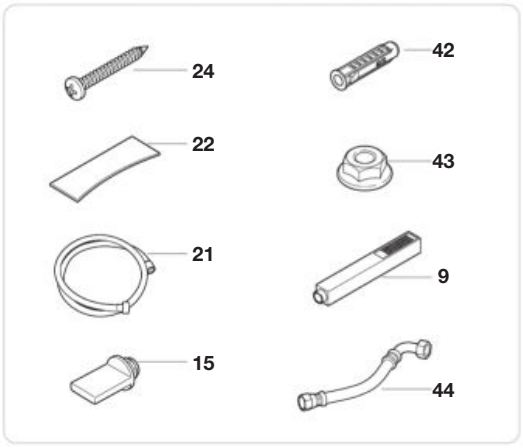

Otras series de columnas
Other column series

		€
A502530900	Pomo inv baño loft cro / Loft bsm diverter knob cp	13,70
A502781200	Embellecedor columna loft / trim plate column Loft	17,60
A502812900	Roseton lv empotrar atai bri / wall plate basin built-in atai shiny	41,60
A502812921	Roseton lv empotrar atai mat / wall plate basin built-in atai opaque	41,60
A502813600	Roseton baño y ducha Loft-T / Loft-T repl wall plate	207,00
A503831207	Anillo temp termost Atai / O-ring cartridge filter	6,01
A504201000	Enlace alim flex jetset / Jetset hose connector	35,70
A504251000	Tubo recto 680 / Riser rail t/s moai kit	57,20
A504521500	Cruceta compl inv jetset / Faucet handle accessory diverter jetset	82,70
AG0190800R	Cruceta columna ducha Loft / Column faucet handle shower Loft	31,20
A504630503	Tuerca suj desviador jetset / Support nut diverter jetset	13,50
A504810900	Conj roseton-casqu Loft-T / Sockets t/s therm Loft-T	99,70
A504811000	Roseton cruceta caud Loft-T / Flow faucet handle wall plate Loft-T	251,00
A505003107	Mecanismo inversor jetset / Diverter t/s jetset	110,00
A505003400	Roseton columna Loft / Column wall plate Loft	3,85
A505121407	Inversor mezcl termost col. Atai / Diverter & flow control Atai	47,20
A505121507	Antiretorno mezcl colum Atai / Check valve set term Atai	17,10
A505123503	Montura columna ducha Loft / Headwork column shower Loft	7,91
A5051243A0	Mezclador compl col atai bri / Atai-T repl thermo mixer	-
A5051243E0	Mezclador compl col atai mat / Mixer accessory column atai opaque	-
A505323000	Rociador showerkit jetset / Jetset (head fixing kit)	116,00
A505323100	Rociador showerkit jetset / Jetset head & fixing kit	-
A505520400	Excentricas columna Loft / Eccentric column Loft	13,50
A505520503	Enlace columna Loft / Column connector Loft	2,75
A505719103	Complemento fijacion jetset / Fix. accessory jetset	3,44
A505719203	Complemento fijacion jetset / Top fixing kit ts jetset	67,30
A505719300	Soporte deslizante jetset / Slide mount jetset	208,00
A505719403	Complemento fij alim jetset / Bottom fixing kit ts jetset	33,60
A521812900	Aro suj repisa tube showerk / Clamp ring deck-mounted tube showerk	17,90
A521880803	Anclaje superior columna e.T. / Upper fix. column	20,30
A522160221	Cabezal superior showerkit tube / Upper showerhead	76,30
A522480903	Casquillo anclaje sup tube / Sleeve upper fix. tube	17,70
A523812807	Repisa showerkit tube / Deck-mounted showerkit tube	83,70
A523812907	Repisa cristal columna et / Shelf glass column et	74,40
A524527900	Cruceta inv showerkit et / Faucet handle diverter showerkit et	15,10

		€
A525001107	Kit juntas inver. (Tube) / Kit seals diverter tube	14,40
A525169200	Rotula cab roc showerkit et / Et repl body jet washer	20,30
A525217303	Grupo hidraul tube showerk / Set hidraul tube showerkit	287,00
A525217403	Grupo hidraul et showerkit / Set hidraul et showerkiy	305,00
A525389900	Rociador superior tube / Showerhead upper tube	50,30
A525390400	Jet rociador showerk et / Et repl body jet	50,30
A525390500	Jet cabez rociad tube / Jet head sprinkler tube	14,40
A525767303	Conj fijacion showerkit tube / Fix. set showerkit tube	33,60
A525769100	Subcj sop base columna touch / Touch column base support	83,30
A525773200	Tubo flexi pvc gris conica 1/2" l1,25m / Tubo flexi pvc 1/2" - l 1,25m.	92,40
A525880100	Accesorios showerkit tube / Tube shower accessories kit	236,00
A525880200	Accesorios showerkit e.T. / Accessories showerkit e.t.	311,00
A525880400	Accesorio anclaje rincon et / Accessory fix. corner et	110,00
A526006103	Subcj base emp columna touch / Touch tap/ column connections	233,00
A5R0520C02	Tubo interior col jet set / Tube concealed column jet set	170,00
A5R0620C08	Conexion columna jet set / Connection column jet set	8,23
A5R0620C28	Antirretorno jet set plus / Check valve	8,23
A5R0620C33	Cuerpo columna set set / Column assembly set	371,00
A5R0620C34	Caño jet set / Spout jet set	-
A5R0620C36	Casquillo jetset plus / Sleeve jetset plus	31,70
A5R0620C37	Flexo 60 cm jetset / Flexible tube 60 cm jetset	45,20
A5R2734A01	Tornillo columna atai / Bolts/screws (atai-t column)	6,21
A5R2734A07	Curva column sup br col atai / Curved column upper shiny column atai	332,00
A5R2734A09	Fijacion column atai / Fix. column atai	21,20
A5R2734A10	Columna principal bri atai / Main column shiny atai	349,00
A5R2734A11	Manguit0 flexo aliment atai / Atai-t flexi supply coupling	34,90
A5R2734A14	Plantilla vertical col atai / Atai-t column fixing bar	35,50
A5R2734A15	Plantilla horizontal col atai / Atai-t column bar fixing kit	22,70
A5R2734A17	Curva column inf br col atai / Curved column lower shiny col atai	460,00
A5R2734A22	Manguito mezcl col atai / Mixer column sleeve atai	14,70
A5R2734A23	Torico mezcl atai / Mixer o-ring atai	4,49
A5R2734A25	Funda cuerpo mezc bri atai / Mixer assembly cover shiny atai	359,00
A5R2734E02	Rociador sup colum atai mat / Showerhead upper column atai opaque	511,00
A5R2734E07	Curva columna sup ma c atai / Curved column upper opaque cold atai	332,00
A5R2734E10	Columna principal mat atai / Main column opaque atai	357,00

Otras series de columnas
Other column series

		€
A5R2734E17	Curva column inf mat c atai / Curved column lower opaque c atai	456,00
A5R2734E25	Funda cuerpo mezc mate atai / Mixer assembly cover opaque atai	359,00
A5R9774A03	Antiretorno ducha colum atai / Check valve shower column atai	34,90
A5R9774A16	Taco fijacion pared s-lim / Fix. dowel wall s-lim	13,20
A5R9774A19	Rec ducha manual s-lim brillo / Kit handshower s-lim shiny	395,00
A5R9774A32	Excentrica s-lim / Eccentric s-lim	76,50
A5R9774A36	Rec indicador temperatura s-lim / Kit temperature indicator s-lim	7,92
A5R9774A51	Rec tuerca desviador s-lim brillo / Kit nut diverter s-lim shiny	21,50
A5R9774A55	Rec rociador brillo s-lim / Kit showerhead shiny s-lim	-
A5R9774A57	Rec cruceta mando termost bri s-lim / Kit handle termostat control s-lim	223,00
A5R9774A59	Rec cruceta desviador s-lim brillo / Kit diverter faucet handle s-lim shiny	180,00
A5R9774E19	Rec ducha manual s-lim mate / Kit handshower s-lim opaque	395,00

		€
A5R9774E55	Rec rociador mate s-lim / Kit showerhead opaque s-lim	-
A5R9774E57	Rec cruceta mando termost mat s-lim / Kit diverter faucet handle s-lim opaque	223,00
A5R9774E59	Rec cruceta desviador s-lim mate / Kit diverter faucet handle s-lim opaque	180,00
AC0015200R	Kit rociador cabezal colum et (2u.) / Kit sprayer head column et (2u.)	98,50
AD0005507R	Kit separador jet columnas / Kit separator jet column	4,35
AD0006107R	Kit desviador 3 vias 360°+asiento / Kit diverter 3 way 360°+seat	29,20
AD0006203R	Kit cuerpo fijacion desviador argo / Kit module fixation connector argo	25,00
AD0006307R	Kit cartucho termostatico argo / Kit cartridge thermostatic essential 2.0	106,00
AG0040300R	Kit roseton columna touch / Kit plate column touch	12,00
AG0047000R	Kit tapon br mando desv. Atai mez. T. / Fxg screw for flow hdle kit	20,20
AG0083700R	Kit toma de agua 1/2 / Kit water intake 1/2	24,00
AG0087600R	Kit soporte ducha Vict-t / Kit support hand shower	49,70

Kits de ducha / Shower kits

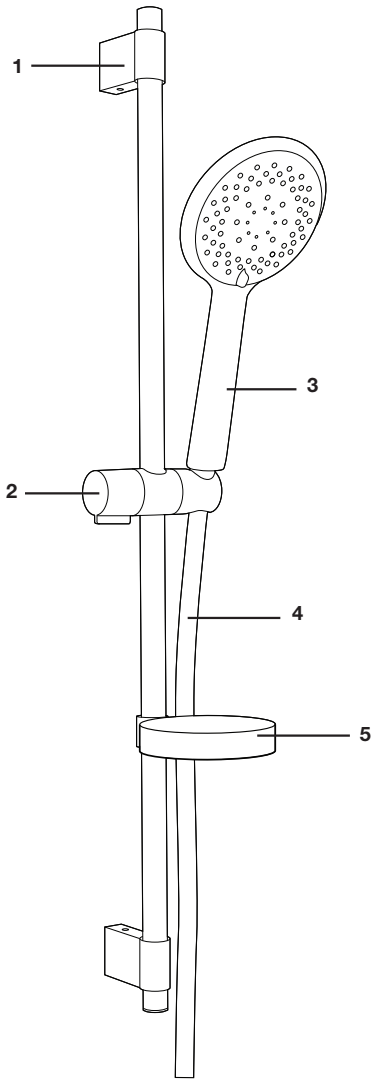

Los dibujos pueden no ajustarse a la realidad, son genéricos
The drawings may not conform to reality, they are generic

Los ultimos dígitos de la referencia de recambio indican el código del acabado:
Last digits of spare part reference indicate finish code:
00 Cromado / Chromed
CB Cromado blanco / Chrome white

Serie	Referencia PA Reference PA	1	€	2	€	3	4	€	5	€
Plenum Round	**A5B1411C00**	**AG0217800R**	12,40	**AG0087600R**	49,70	**A5B1111C00**	**A525009900**	52,60	**AG0234100R**	18,60
	A5B1411CB0					**A5B1111CB0**				
Plenum Square	**A5B1A10C00**					**A5B1110C00**				
	A5B1A10CB0					**A5B1110CB0**				
Plenum Go	**A5B1P11C00**					**A5B8114C00**			-	
	A5B8114B00					**A5B1L11CB0**			**AG0234100R**	18,60
Sensum Round	**A5B1407C00**			**AG0041500R**	15,90	**A5B1107C00**				
Sensum Square	**A5B1408C00**					**A5B1108C00**				
Stella 100	**A5B1D03C00**	**AG0242000R**	8,73	**AG0041500R**	15,90	**A5B8113C00**	**A5B2416C00**	-	-	
	A5B9D03C00					**A5B9G03C00**				
Stella 80	**A5B1403C00**					**A5B1103C00**				
	A5B9403C00					**A5B9103C00**				

Sets de ducha / Shower sets

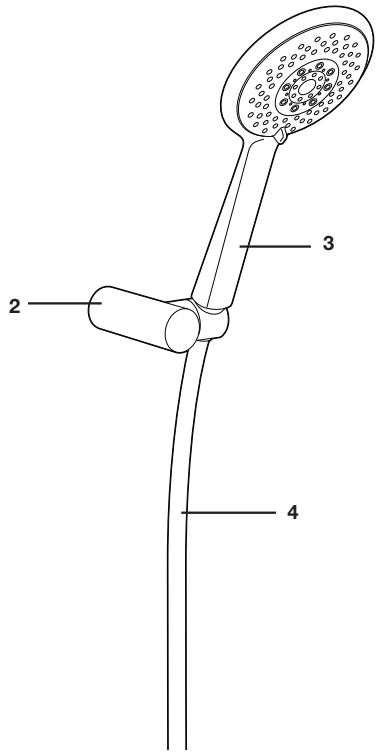

Los dibujos pueden no ajustarse a la realidad, son genéricos
The drawings may not conform to reality, they are generic

Serie	**Referencia PA** Reference PA	2	€	3	€	4	€
Sensum Round	**A5B1307C00**	**AG0068500R**	27,30	**A5B1107C00**	-	**A525009900**	52,60
Sensum Square	**A5B1308C00**			**A5B1108C00**	-		
Stella 100/3	**A5B1C03C00**	**AG0003700R**	13,70	**A5B8113C00**	-	**A5B2416C00**	-
Stella 100/1	**A5B9C03C00**			**A5B9103C00**	-		

Insignia

Caños para bañeras / Bath spouts

A5A0703

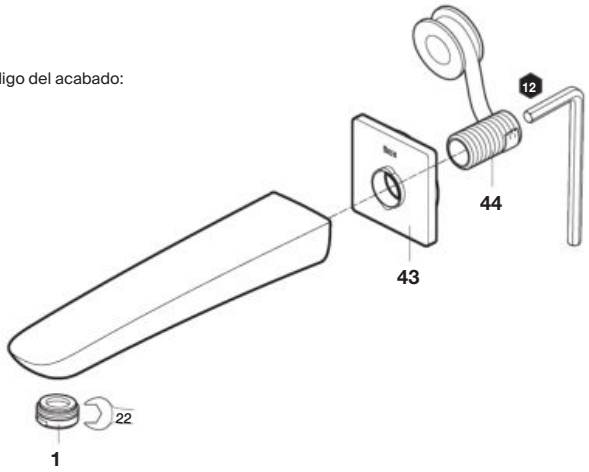

Los ultimos dígitos de la referencia de recambio indican el código del acabado:
Last digits of spare part reference indicate finish code:

00 Cromado / Chormed
CN Negro titanio / Titanium black
RG Oro rosado / Rose gold
NM Negro titanio cepillado / Brushed titanium black

		€
1	**AG0196400R**	6,55
	AG01964CNR	10,20
	AG01964RGR	8,91
	AG01964NMR	15,00
43	**AG0154600R**	9,29
	AG01546CNR	32,90
	AG01546RGR	27,90
	AG01546NMR	35,80
44	**AG0145800R**	28,60

Lanta

Caños para bañeras / Bath spouts

A5A0803

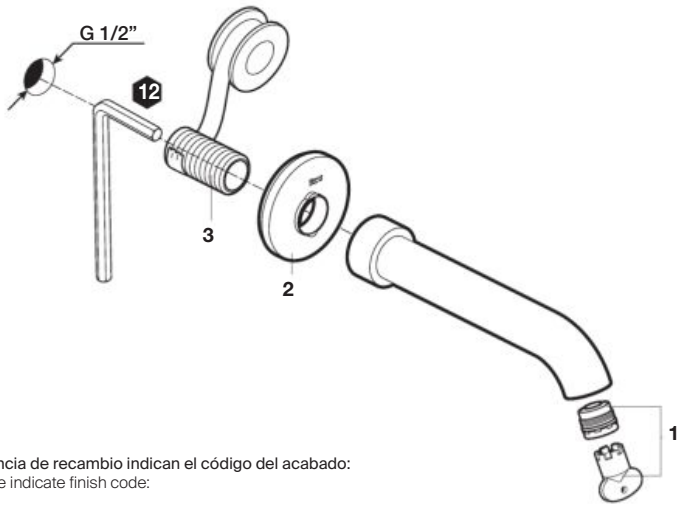

Los ultimos dígitos de la referencia de recambio indican el código del acabado:
Last digits of spare part reference indicate finish code:

00 Cromado / Chormed
CN Negro titanio / Titanium black
RG Oro rosado / Rose gold
NB Negro mate / Matt black

		€
1	**AG0145600R**	17,40
2	**AG0145700R**	16,50
	AG01457CNR	13,60
	AG01457RGR	13,60
	AG01457NBR	12,60

		€
3	**AG0145800R**	28,60

Flowdream

Caños para bañeras / Bath spouts

A5A0603C00

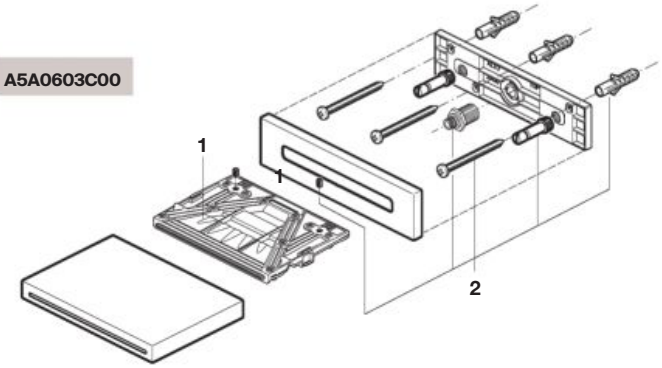

A5A0503C00

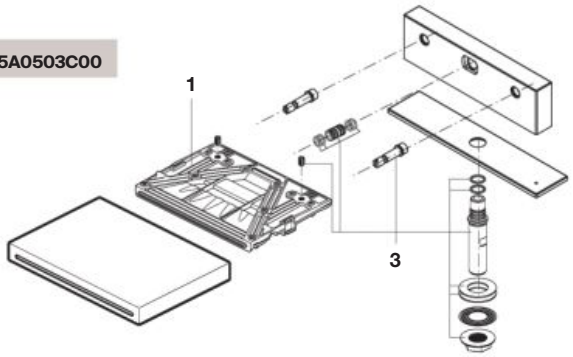

		€
1	**AG0083000R**	113,00
2	**AG0083100R**	73,30
3	**AG0137500R**	40,30

Be Fresh

Conjuntos de ducha para bidé / Shower kit mixers for bidet

A5B9461C00

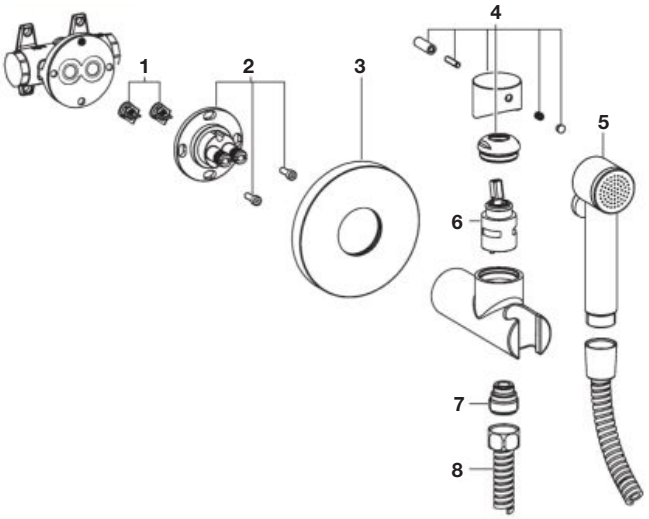

A5B9161C00
A5B9261C00

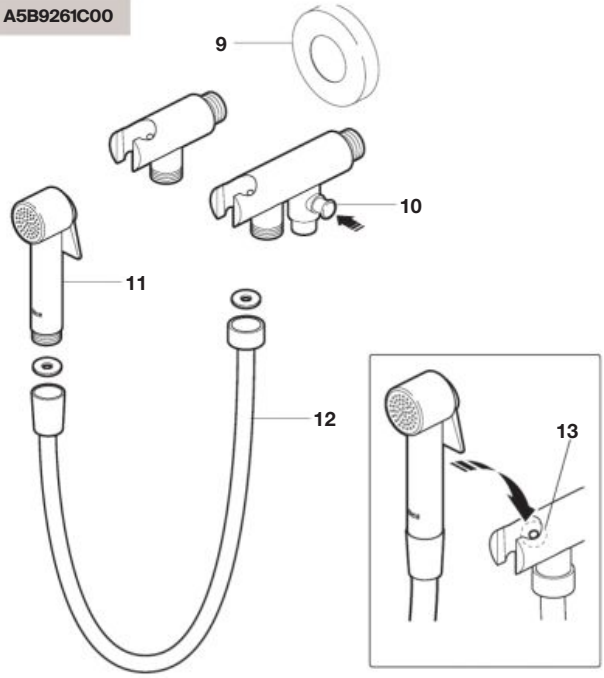

		€
1	**AG0139500R**	23,60
2	**AG0138800R**	109,00
3	**AG0138900R**	83,50

		€
4	**AG0139000R**	95,20
5	**AG0139100R**	36,10
6	**AG0139200R**	60,30

		€
7	**AG0139300R**	11,20
8	**AG0139400R**	12,60
9	**AG0195100R**	13,30

		€
10	**AG0195200R**	44,60
11	**AG0139100R**	36,10
12	**AG0107500R**	28,90

		€
13	**AG0195300R**	28,90

Be Fresh

Conjuntos de ducha para bidé / Shower kit mixers for bidet

A5B9361C00

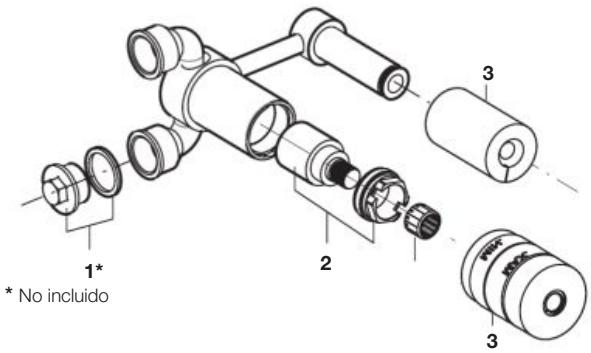

* No incluido

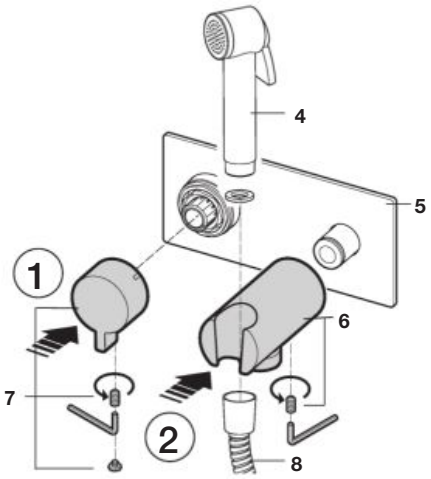

		€			€			€			€
1	**AG0094803R**	15,60	3	**AG0107807R**	26,10	5	**AG0107200R**	122,00	7	**AG0007000R**	20,90
2	**AG0007107R**	36,20	4	**AG0139100R**	36,10	6	**AG0107400R**	98,20	8	**AG0139400R**	12,60

Syra-E

Mezclador electrónico para cocina / Kitchen electronic mixer

A5A8A2A

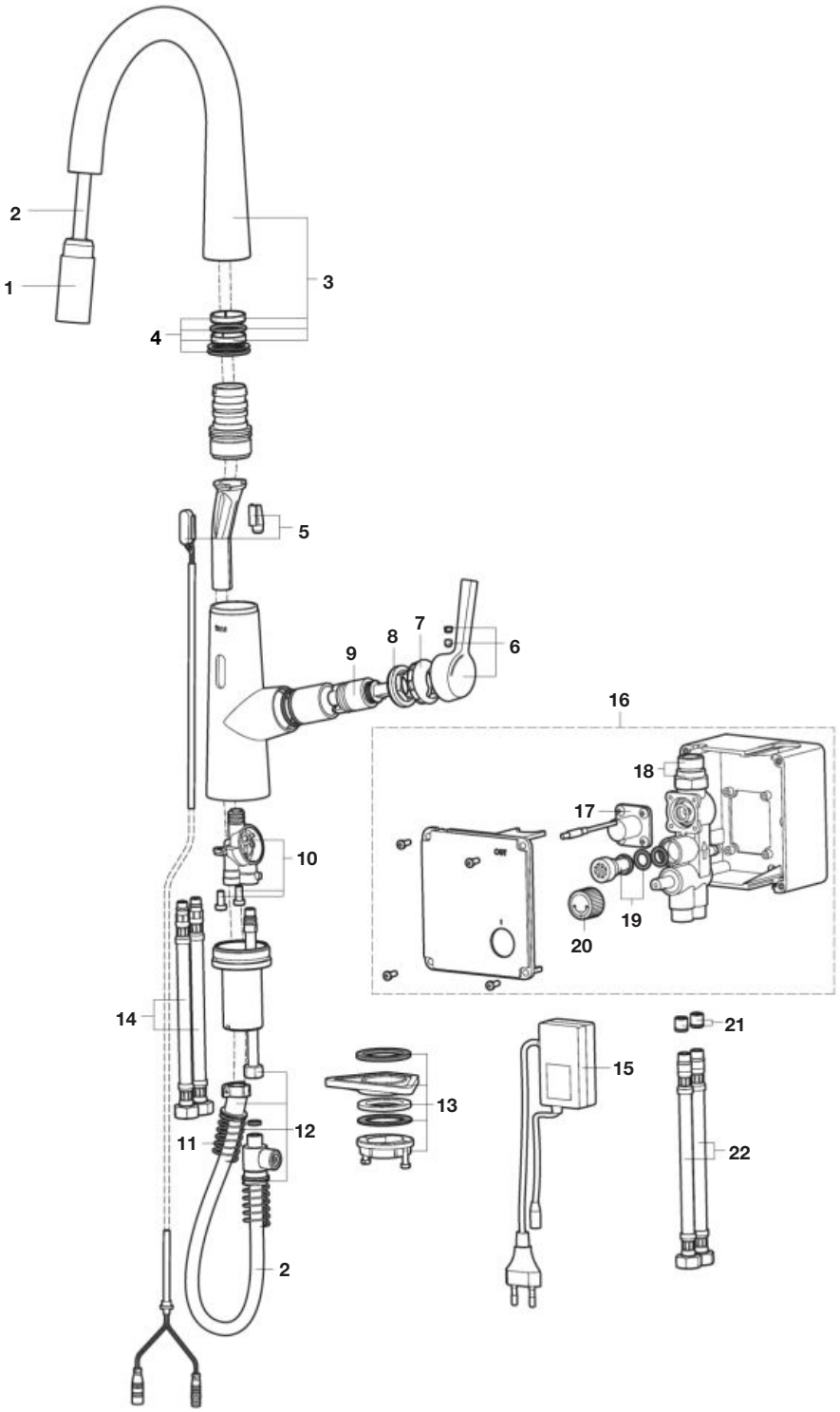

		€
1	**AG0155700R**	71,10
2	**AG0156400R**	14,70
3	**AG0155600R**	205,00
4	**AG0156300R**	121,00
5	**AG0189300R**	208,00

		€
6	**AG0154700R**	17,70
7	**AG0154900R**	4,83
8	**AG0154800R**	32,70
9	**AG0118207R**	14,40
10	**AG0189700R**	11,10

		€
11	**AG0003903R**	22,60
12	**AG0189200R**	42,70
13	**AG0155300R**	11,10
14	**AG0119708R**	16,40
15	**AG0093507R**	87,60

		€
16	**AG0119207R**	162,00
17	**AG0093107R**	117,00
18	**AG0093003R**	7,14
19	**AG0093207R**	12,80
20	**AG0093307R**	7,15

		€
21	**AD0008500R**	8,12
22	**AG0219600R**	11,30

Syra

Griferías para cocina / Kitchen faucet

A5A812A..0 **A5A842A..0**

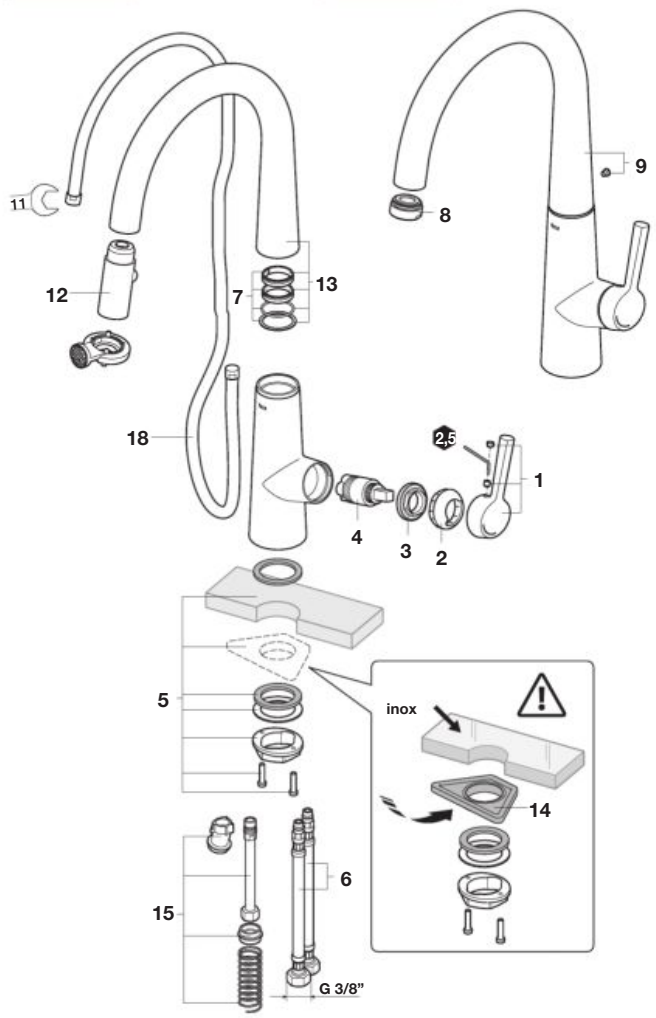

Griferías para cocina / Kitchen faucet

A5A832A..0 **A5A852A..0**

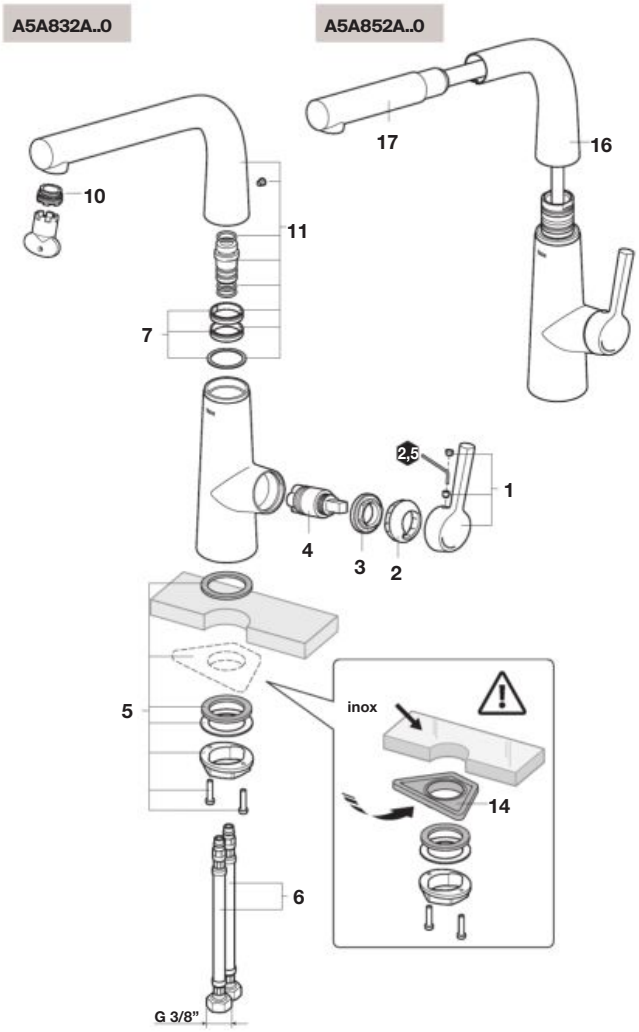

		€
1	**AG0154700R**	17,70
2	**AG0154900R**	4,83
3	**AG0154800R**	32,70
4	**AG0118207R**	14,40

		€
5	**AG0155300R**	11,10
6	**AG0119708R**	16,40
7	**AG0155000R**	9,41
8	**AG0155500R**	2,20

		€
9	**AG0155400R**	261,00
10	**AG0155200R**	7,73
11	**AG0155100R**	274,00
12	**AG0155700R**	71,10

		€
13	**AG0155600R**	205,00
14	**AG0101207R**	2,35
15	**AG0155800R**	30,90
16	**AG0155900R**	176,00

		€
17	**AG0156000R**	105,00
18	**AG0156400R**	14,70

Syra-F

Mezclador para cocina con agua filtrada / Filtered water kitchen mixer

A5A8C2A
A5A8B2A

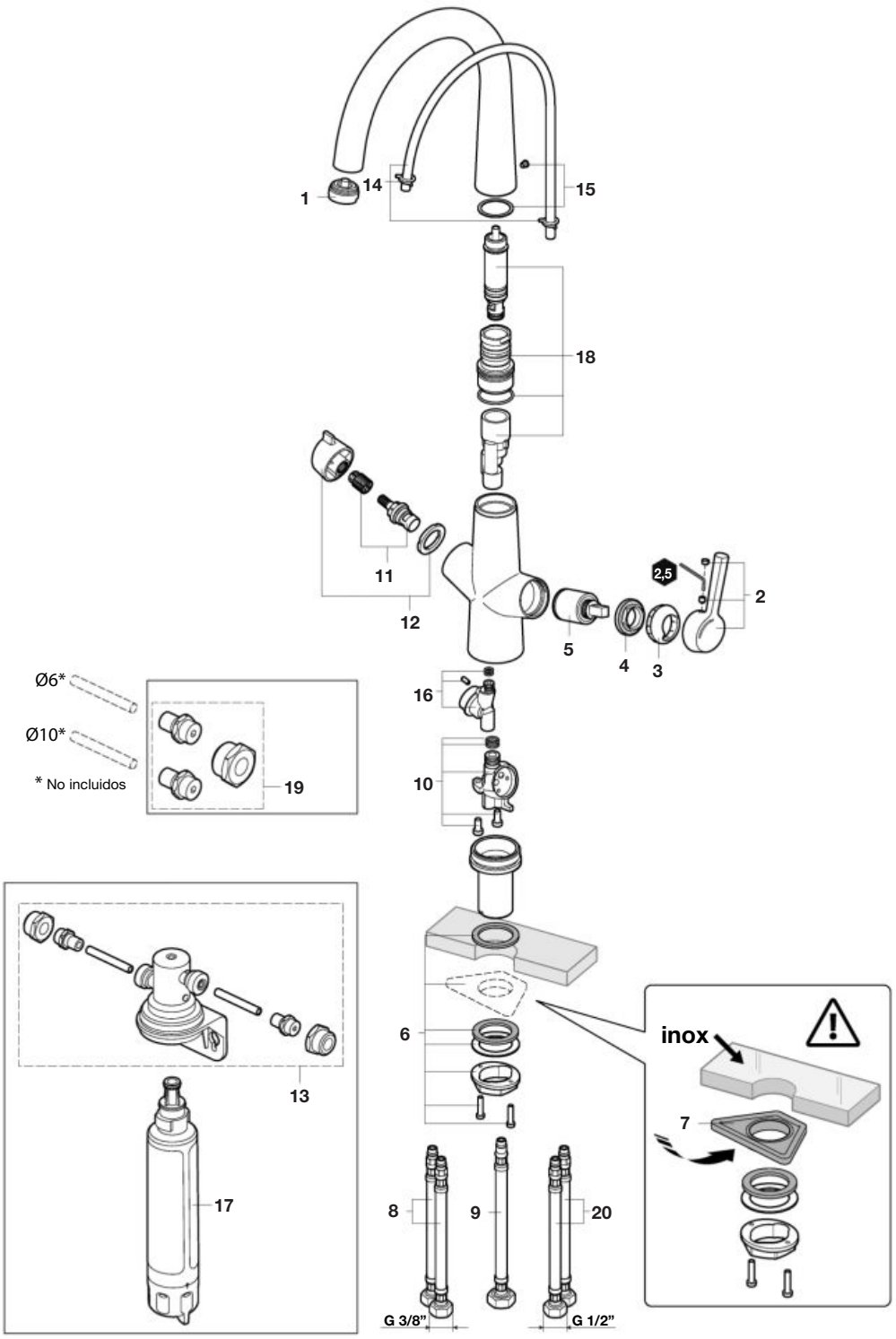

		€
1	**AG0195500R**	31,50
2	**AG0154700R**	17,70
3	**AG0154900R**	4,83
4	**AG0154800R**	32,70

		€
5	**AG0118207R**	14,40
6	**AG0155300R**	11,10
7	**AG0101207R**	2,35
8	**AG0119708R**	16,40

		€
9	**AG0103808R**	2,05
10	**AG0195600R**	10,90
11	**AG0006403R**	32,10
12	**AG0195700R**	43,80

		€
13	**AG0195800R**	138,00
14	**AG0195900R**	26,20
15	**AG0196000R**	6,95
16	**AG0196100R**	25,30

		€
17	**A525898107**	64,80
18	**AG0215700R**	98,20
19	**AG0219300R**	52,70
20	**AG0165000R**	21,70

Glera Pro

Grifería para cocina / Kitchen faucet

A5A8A4D..0

A5A884D..0

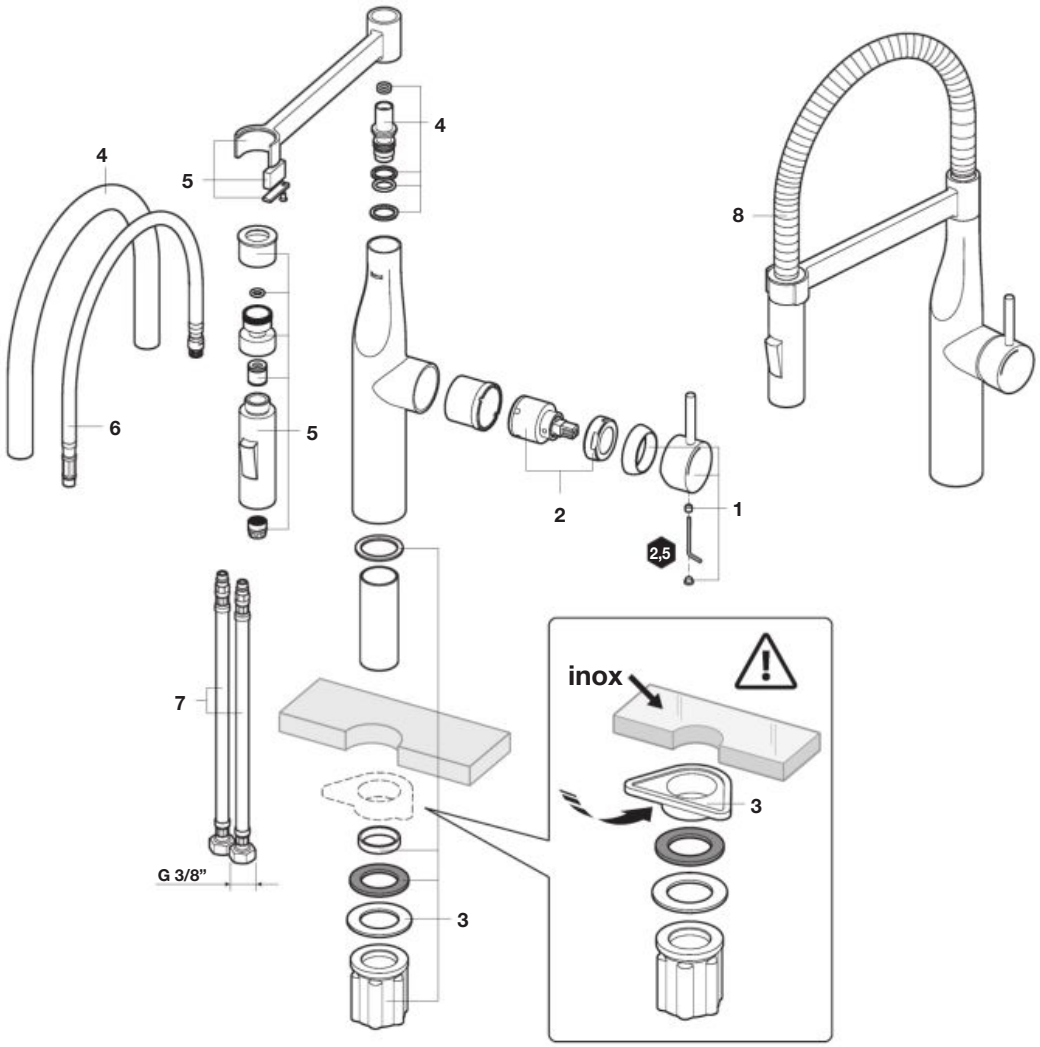

		€
1	**AG0237400R**	15,90
2	**AG0237700R**	8,53

		€
3	**AG0237900R**	7,68
4	**AG0214800R**	22,40

		€
5	**AG0214700R**	109,00
6	**AG0238000R**	36,40

		€
7	**AG0119708R**	16,40
8	**AG0214900R**	36,40

Glera

Grifería para cocina / Kitchen faucet

A5A834D..0

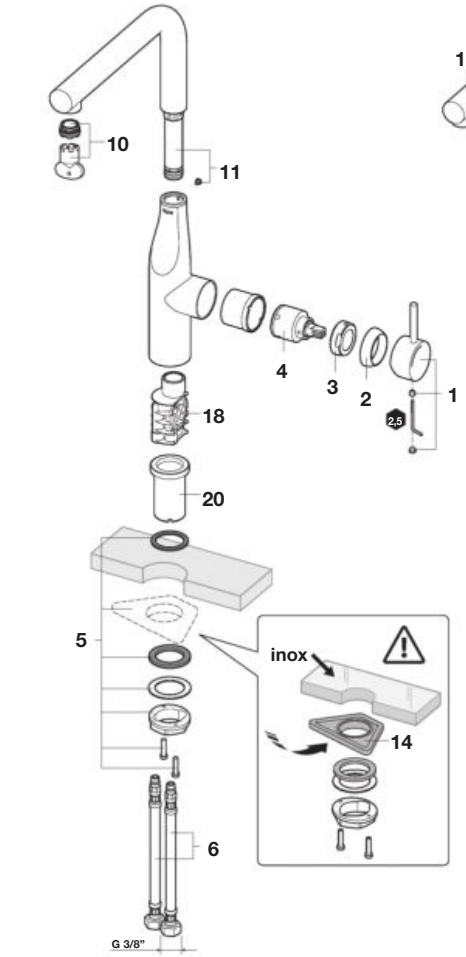

A5A854D..0

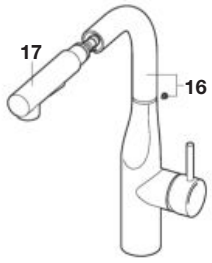

Grifería para cocina / Kitchen faucet

A5A814D..0

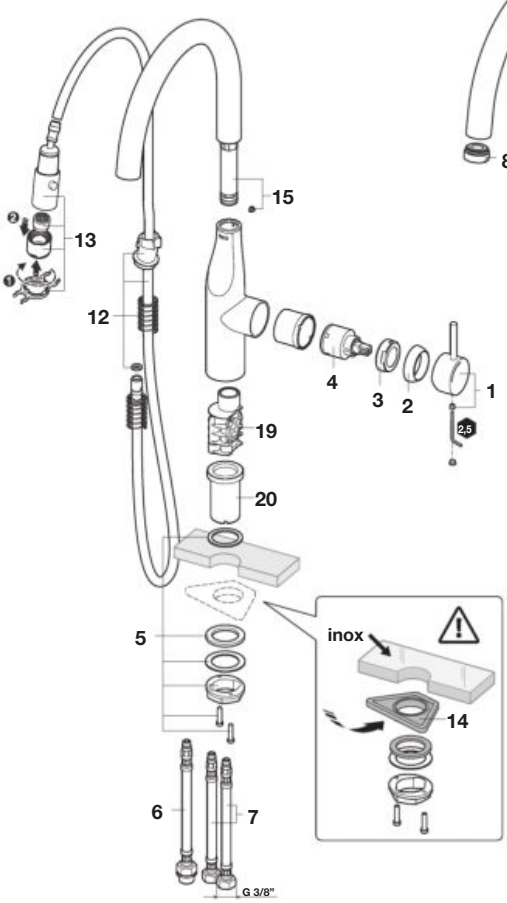

A5A844D..0

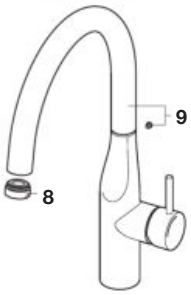

Códigos del acabado Everlux:
Code for the Everlux finish code:

00	**00**	Cromado / Chromed
SM	**SM**	Acero inoxidable / Stainless Steel

		€
1	**AG0213200R**	15,00
	AG02132SMR	10,60
2	**AG0213300R**	7,21
	AG02133SMR	1,80
3	**AG0219700R**	41,50
4	**AG0158100R**	8,38
5	**AG0031803R**	36,20

		€
6	**AG0119708R**	16,40
7	**AG0213700R**	22,70
8	**AG0155500R**	2,20
	AG01555SMR	13,20
9	**AG0214400R**	170,00
	AG02144SMR	134,00
10	**AG0155200R**	7,73

		€
11	**AG0214300R**	155,00
	AG02143SMR	139,00
12	**AG0214000R**	54,70
13	**AG0003800R**	58,80
	AG00038SMR	44,10
14	**AG0101207R**	2,35

		€
15	**AG0214200R**	156,00
	AG02142SMR	139,00
16	**AG0214600R**	119,00
	AG02146SMR	114,00
17	**AG0214500R**	47,30
	AG02145SMR	49,60
18	**AG0214100R**	17,40

		€
19	**AG0213800R**	15,80
20	**AG0219100R**	36,40

Ona

Grifería para cocina / Kitchen faucet

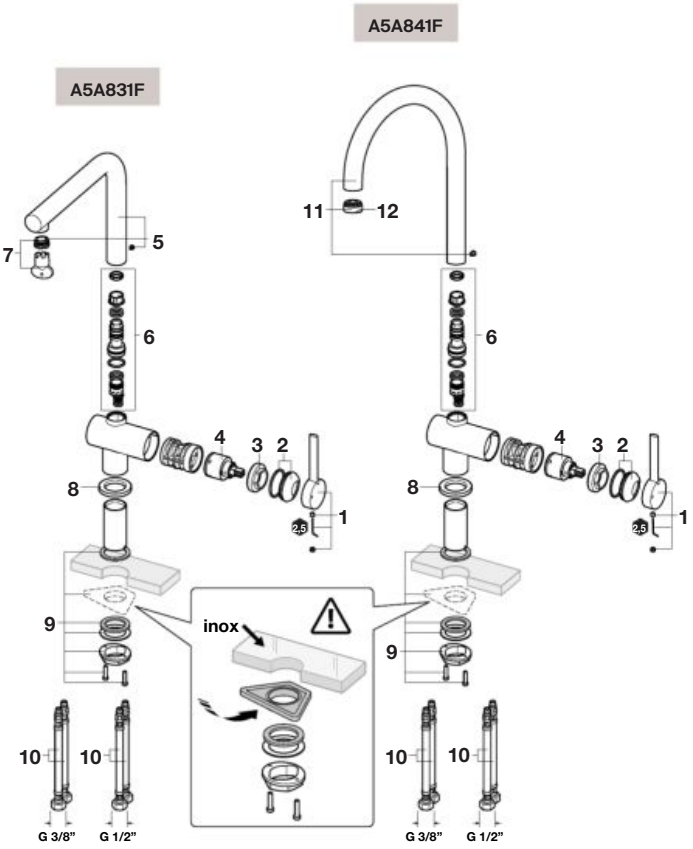

Grifería para cocina / Kitchen faucet

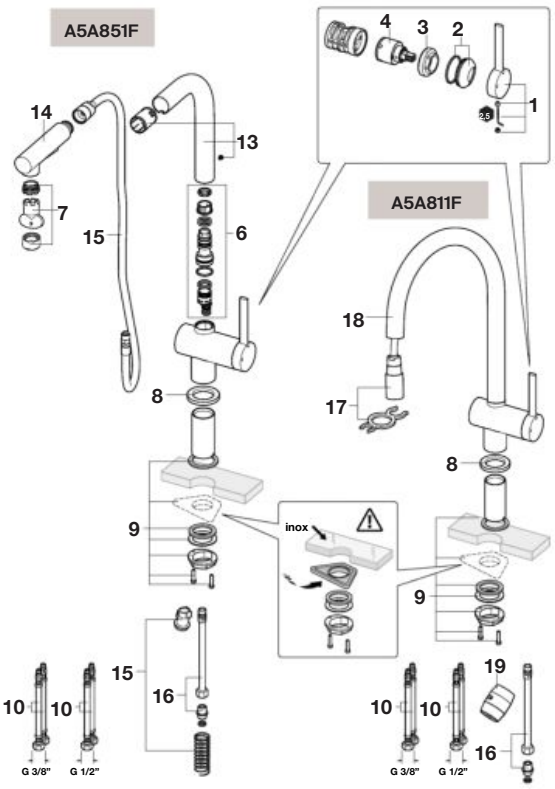

Códigos del acabado Everlux:
Code for the Everlux finish code:

00	**00**	**Cromado /** Chromed
NB	**BM/NB**	**Negro Mate /** Matt black
SM	**SM**	**Acero inoxidable /** Stainless Steel

			€
1	**AG02332..R**		14,70
2	**AG02333..R**		5,95
3	**AG0233400R**		11,00
4	**AG0158100R**		8,38
5	**AG02335..R**		109,00
6	**AG0233600R**		20,60
7	**AG0155200R**		7,73
8	**AG02337..R**		12,20
9	**AG0031803R**		36,20
10	**AG0008009R**	(3/8")	10,60
	AG0223800R	(1/2")	16,20

		€
11	**AG02338..R**	137,00
12	**AG01555..R**	2,20
13	**AG02339..R**	75,30
14	**AG02145..R**	47,30
15	**AG0214000R**	54,70
16	**AG0213700R**	22,70
17	**AG00038..R**	58,80
18	**AG02340..R**	125,00
19	**AG0000703R**	12,00

Cala

Grifería para cocina / Kitchen faucet

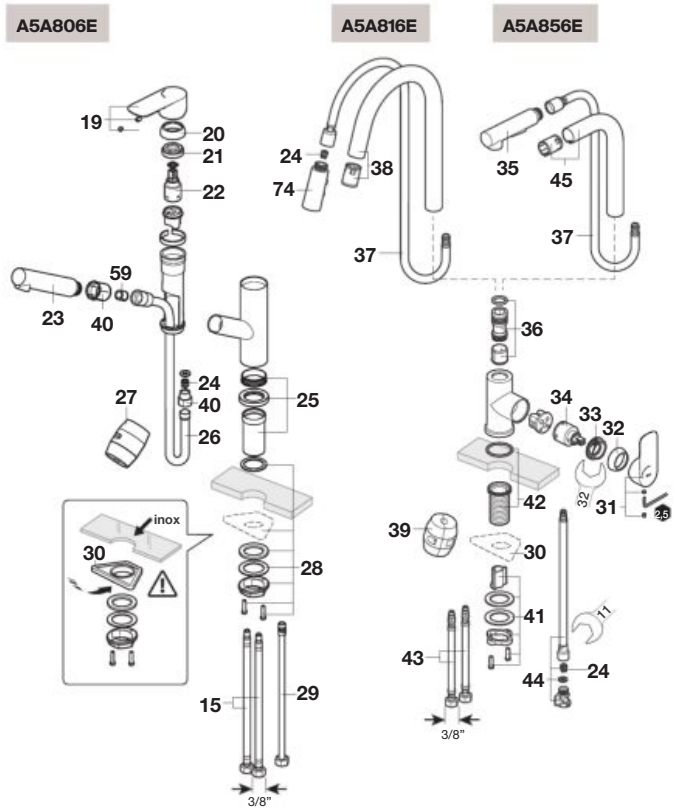

Grifería para cocina / Kitchen faucet

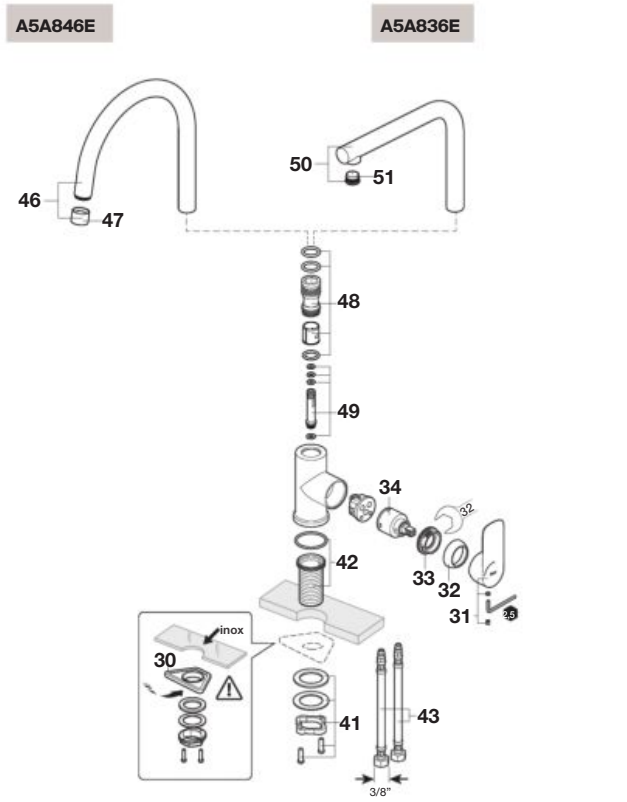

Sustituir los (...) de la referencia por el código del acabado Everlux elegido:
In the product reference replace (..) with the code for the selected finish code:
00 Cromado / Chromed
NB Negro mate / Matt black

		€
1	**AG0223000R**	14,70
	AG02230NBR	28,00
2	**AG0223100R**	3,97
	AG02231NBR	7,73
3	**AG0222900R**	6,80
4	**AG0223200R**	11,60
5	**A525094707**	16,90
6	**AG0223300R**	5,97
7	**AG0223400R**	8,62
8	**AG0196400R**	6,55
9	**A525020309**	15,00
10	**AG0075300R**	28,80
11	**AG0096200R**	7,48
12	**AG0223500R**	15,50
	AG02235NBR	44,60
13	**AG0223600R**	10,50
14	**AG0032300R**	15,90
	AG00323NBR	14,00
15	**AG0223700R**	12,50
16	**AG0142100R**	3,20
17	**AG0174608R**	13,20
18	**AG0223800R**	16,20
19	**AG0223900R**	21,50
20	**AG0172300R**	4,15

			€
21		**AG0224000R**	5,59
22		**AG0224100R**	12,40
23		**AG0214500R**	47,30
		AG02145NBR	26,40
24	2 un	**AG0134907R**	6,77
25		**AG0224200R**	21,50
26		**AG0031700R**	26,70
27		**AG0000703R**	12,00
28		**AG0031803R**	36,20
29		**AG0224400R**	17,00
30		**AG0101207R**	2,35
31		**AG0224500R**	24,60
32		**AG0224600R**	29,40
33		**AG0224700R**	21,40
34		**AG0236500R**	42,60
35		**AG0224800R**	95,20
		AG02248NBR	51,70
36		**AG0224900R**	38,50
37		**AG0225000R**	79,40
38		**AG0225100R**	165,00
39		**AG0225200R**	50,30
40		**AG0225300R**	5,23
41		**AG0225400R**	29,90
42		**AG0225500R**	25,00

			€
43		**AG0119708R**	16,40
44		**AG0225600R**	76,20
45		**AG0225700R**	73,60
46		**AG0225800R**	45,20
47		**AG0225900R**	26,10
48		**AG0226000R**	20,60
49		**AG0226100R**	18,80
50		**AG0226200R**	197,00
51		**AG0226300R**	28,20
52		**AG0226400R**	16,80
		AG02264NBR	30,60
53		**AG0085300R**	18,00
		AG00853NBR	10,80
54		**A525023507**	4,23
55		**AG0110607R**	9,98
56		**AG0213100R**	8,70
		AG02131NBR	20,80
57	2 un	**AG0103908R**	17,30
58	2 un	**AG0116800R**	9,26
		AG01168NBR	38,20
59	2 un	**A525005507**	7,44
60		**AG0036800R**	3,71
61		**A525005407**	7,44

		€
62	**AG0212800R**	3,15
	AG02128NBR	7,36
63	**AG0116700R**	4,36
	AG01167NBR	10,90
64	**AG0116500R**	13,90
65	**AG0001907R**	11,00
66	**AG0119500R**	19,40
	AG01195NBR	112,00
67	**AG0119600R**	20,60
	AG01196NBR	115,00
68	**A525006500** Cromado / Chromed	23,30
	AG02186NBR	45,80
69	**AG0142300R**	10,60
70	**AG0155000R**	9,41
71	**AG0173300R**	15,50
72	**A5054015..**	-
	A5054015NB	-
73	**AG0231700R**	8,15
	AG02317NBR	11,80
74	**AG0273800R**	31,20
	AG02738NBR	22,30

L90

Mezclador para cocina / Kitchen faucet

A5A8301

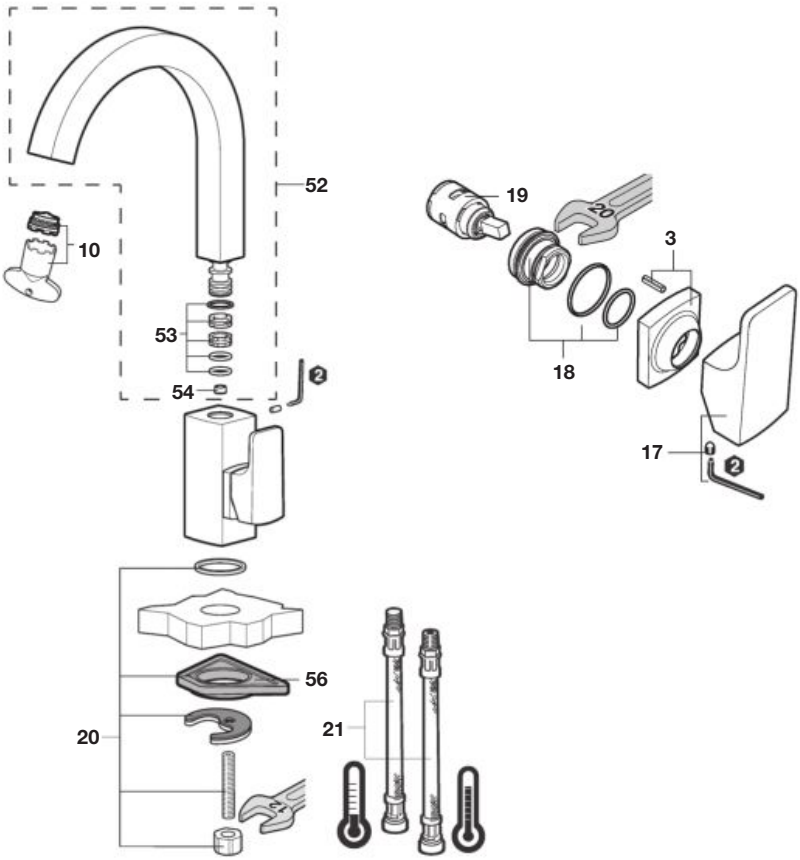

Mezclador para cocina / Kitchen faucet

A5A8501

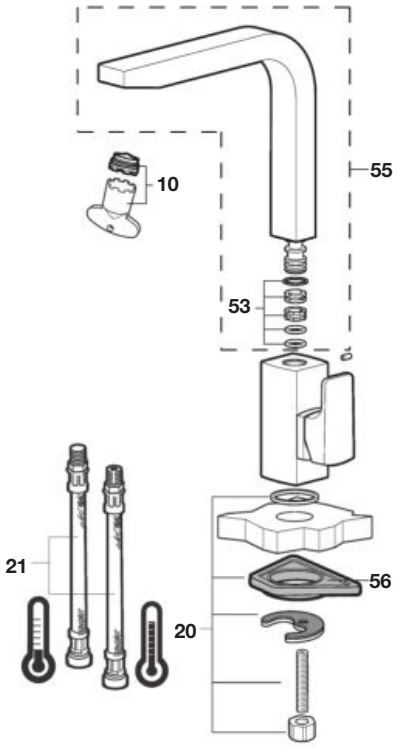

		€
1	**AG0041800R**	42,00
2	**AG0096200R**	7,48
3	**AG0032100R**	27,90
4	**AG0041903R**	25,60
5	**AG0175300R**	-
6	**A525020309**	15,00
7	**AG0200700R**	19,40
8	**AG0200700R**	19,40
9	**AG0096409R**	13,90
10	**AG0129807R**	9,55
11	**A525020600**	8,88
12	**A525004403**	7,92
13	**AG0075400R**	33,80

		€
14	**AG0096200R**	7,48
15	**AG0077100R**	40,60
16	**A525003507**	38,20
17	**AG0042000R**	47,30
18	**AG0042103R**	18,80
19	**AG0034103R**	50,00
20	**A525006903**	8,56
21	**AG0137300R**	19,60
22	**AG0042200R**	47,30
23	**AG0010203R**	103,00
24	**AG0007403R**	17,00
25	**A525020509**	13,20
26	**AG0007503R**	38,20

		€
27	**AG0173300R**	15,50
28	**AG0001907R**	11,00
29	**AG0096509R**	16,40
30	**AG0033300R**	30,00
31	**AG0042300R**	42,00
32	**AG0042400R**	156,00
33	**A525027803**	32,40
34	**AG0053707R**	39,20
35	**A525029207**	13,70
37	**AG0116700R**	4,36
38	**A525005800**	7,44
39	**AG0116500R**	13,90
40	**AG0134907R**	6,77

		€
41	**A525005200**	15,30
42	**AG0145500R**	6,17
43	**AG0103908R**	17,30
45	**A525021600**	32,70
46	**A525009800**	27,10
47	**A525024200**	9,74
48	**A525005507**	7,44
49	**AG0043300R**	114,00
50	**AG0042700R**	125,00
51	**A525022800**	85,90
52	**AG0144900R**	85,90
53	**AG0017707R**	5,83
54	**AG0131007R**	5,29

		€
55	**AG0145000R**	135,00
56	**AG0101207R**	2,35
57	**AG0016200R**	27,70
58	**AG0143200R**	4,09
59	**AG0142100R**	3,20
60	**AG0137200R**	23,30
61	**AG0046600R**	11,40
62	**AG0155000R**	9,41
63	**AG0200600R**	17,40

Mencia

Griferías para cocina / Kitchen faucet

A5A7409C00	Cromado / Chromed
A5A7409CN0	Negro / Black
A5A7409CM0	Platino cepillado / Brushed platinum
A5A7409B00	Blanco / White

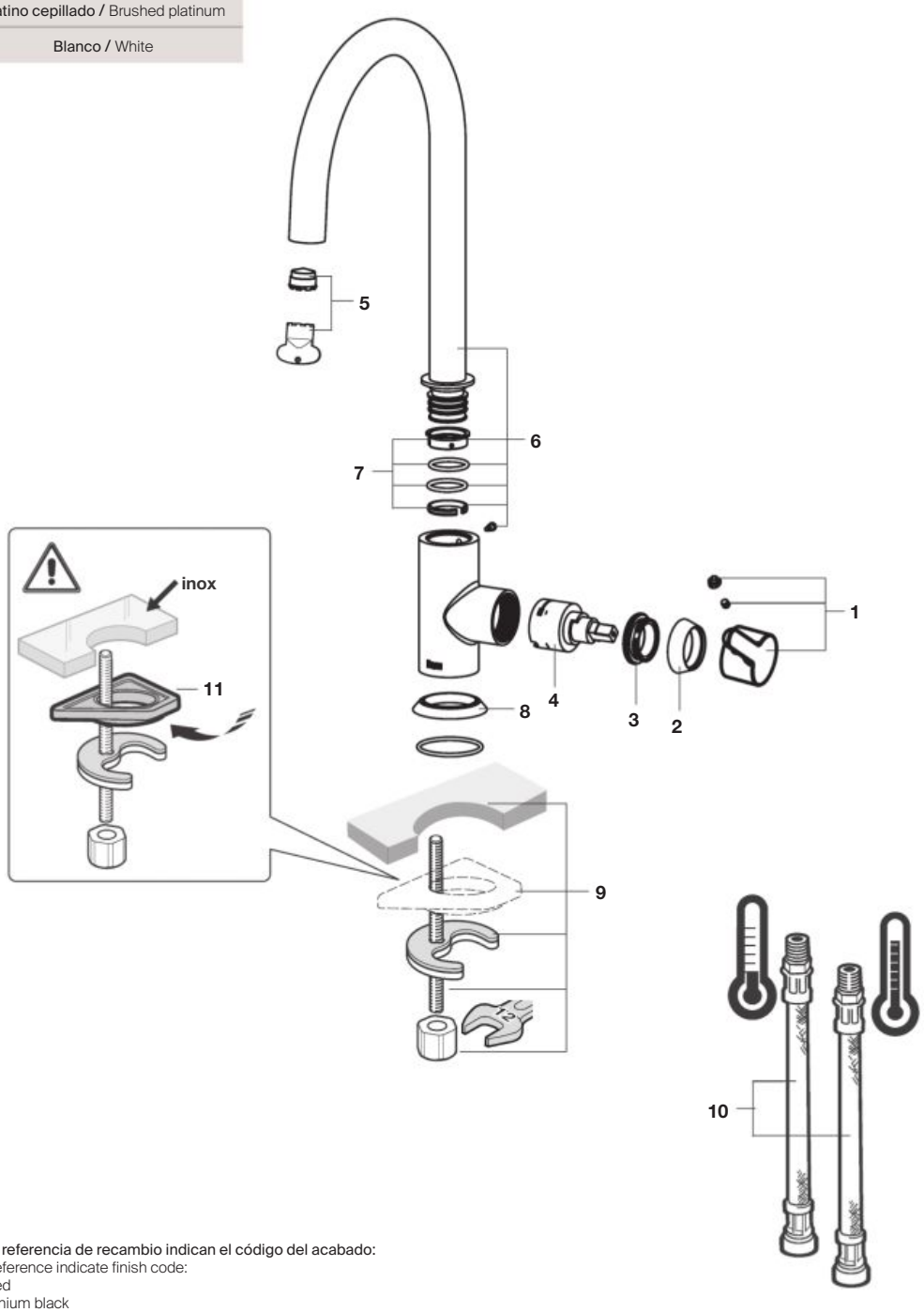

Los ultimos dígitos de la referencia de recambio indican el código del acabado:
Last digits of spare part reference indicate finish code:
00 Cromado / Chormed
CN Negro titanio / Titanium black
RG Oro rosado / Rose gold
NM Negro titanio cepillado / Brushed titanium black

		€
1	**AG0157800R**	24,20
	AG01578CMR	36,20
	AG01578CNR	36,20
	AG01578B0R	24,20
2	**AG0157900R**	9,02
	AG01579CMR	10,90
	AG01579CNR	11,50
	AG01579B0R	17,10

		€
3	**AG0158000R**	5,50
4	**AG0158100R**	8,38
5	**AG0158200R**	7,73
6	**AG0158300R**	71,60
	AG01583CMR	120,00
	AG01583CNR	153,00
	AG01583B0R	195,00
7	**AG0158400R**	10,00

		€
8	**AG0158500R**	11,40
	AG01585CMR	13,80
	AG01585CNR	14,60
	AG01585B0R	10,90
9	**AG0158600R**	6,97
10	**AG0158700R**	13,40
11	**AG0158800R**	3,14

L20

Mezclador para cocina / Kitchen faucet

A5A7609

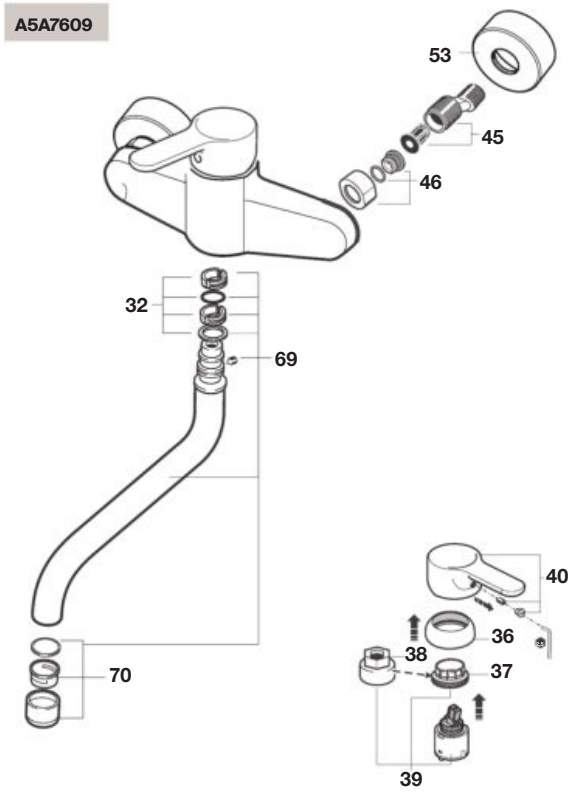

Mezclador para cocina / Kitchen faucet

A5A8909

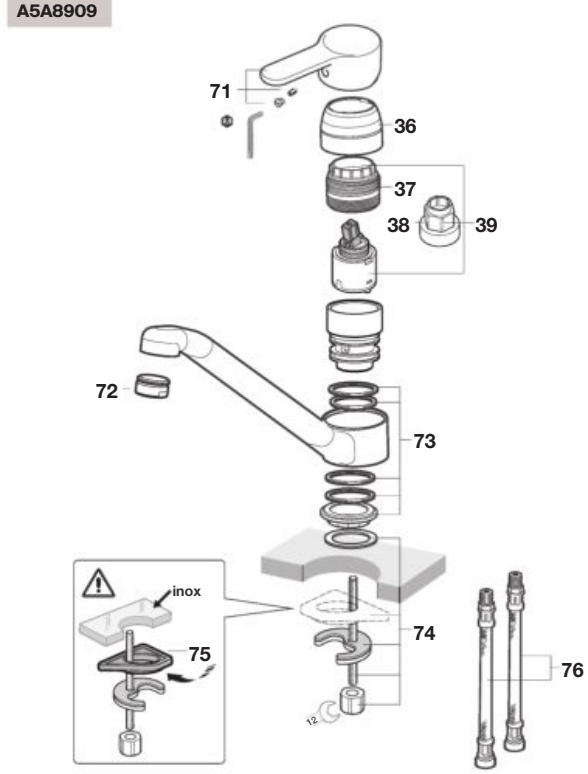

			€
6		**AG0032800R**	25,80
32		**AG0017707R**	5,83
35		**AG0071600R**	17,40
36		**AG0085300R**	18,00
37		**A525023507**	4,23
38		**A525005407**	7,44
39		**AG0110607R**	9,98
40		**AG0032400R**	20,20
45	2 un	**AG0103908R**	17,30

			€
46		**A525005200**	15,30
53	2 un	**AG0116800R**	9,26
69		**AG0005800R**	100,00
70		**A525006600**	7,44
71		**AG0071400R**	17,30
72		**A525004700**	7,44
73		**A525007203**	8,53
74		**AG0085803R**	9,55
75		**AG0101207R**	2,35

		€
76	**AG0061409R**	31,90
77	**AG0001600R**	67,40
78	**AG0071500R**	27,10
79	**AG0001503R**	9,17
80	**AG0119708R**	16,40
81	**AG0143500R**	107,00
82	**AG0143600R**	2,64
83	**AG0135000R**	45,20
84	**AG0159500R**	32,30

L20

Mezclador para cocina / Kitchen faucet

A5A8409

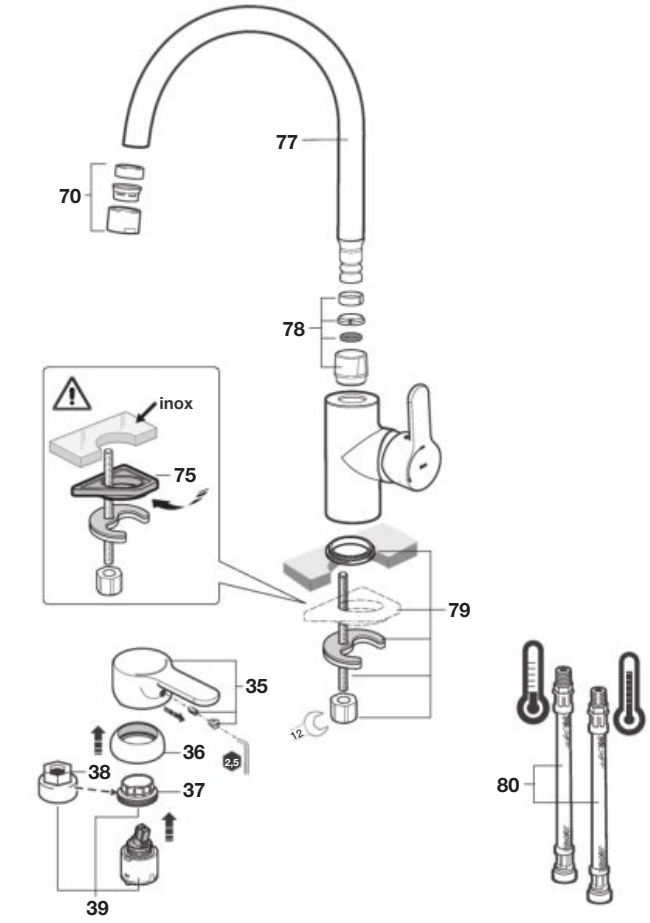

Mezclador para cocina / Kitchen faucet

A5A8209

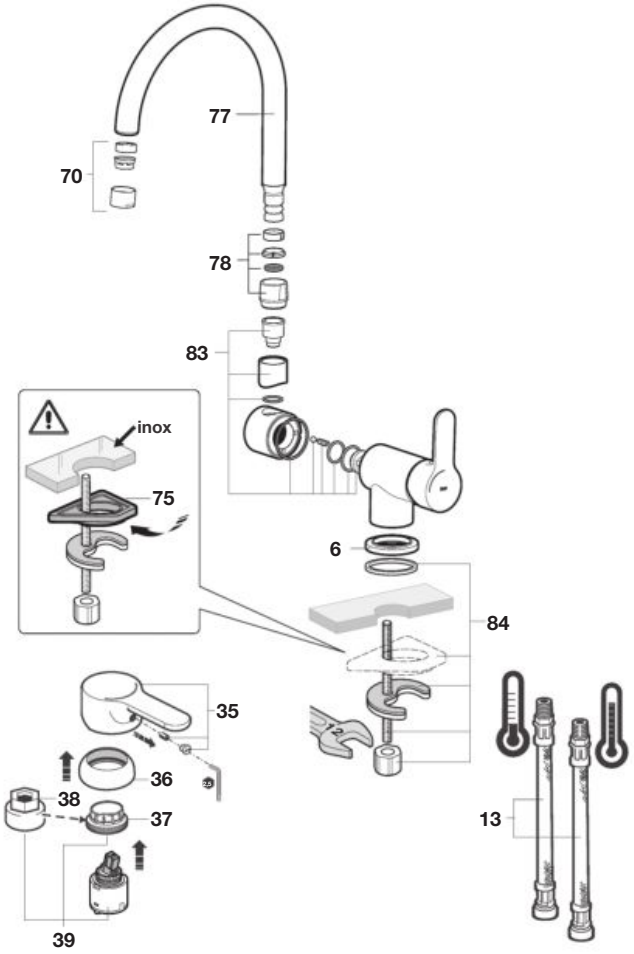

			€
6		**AG0032800R**	25,80
32		**AG0017707R**	5,83
35		**AG0071600R**	17,40
36		**AG0085300R**	18,00
37		**A525023507**	4,23
38		**A525005407**	7,44
39		**AG0110607R**	9,98
40		**AG0032400R**	20,20
45	2 un	**AG0103908R**	17,30

			€
46		**A525005200**	15,30
53	2 un	**AG0116800R**	9,26
69		**AG0005800R**	100,00
70		**A525006600**	7,44
71		**AG0071400R**	17,30
72		**A525004700**	7,44
73		**A525007203**	8,53
74		**AG0085803R**	9,55
75		**AG0101207R**	2,35

		€
76	**AG0061409R**	31,90
77	**AG0001600R**	67,40
78	**AG0071500R**	27,10
79	**AG0001503R**	9,17
80	**AG0119708R**	16,40
81	**AG0143500R**	107,00
82	**AG0143600R**	2,64
83	**AG0135000R**	45,20
84	**AG0159500R**	32,30

Victoria

Grifería para cocina / Kitchen faucet

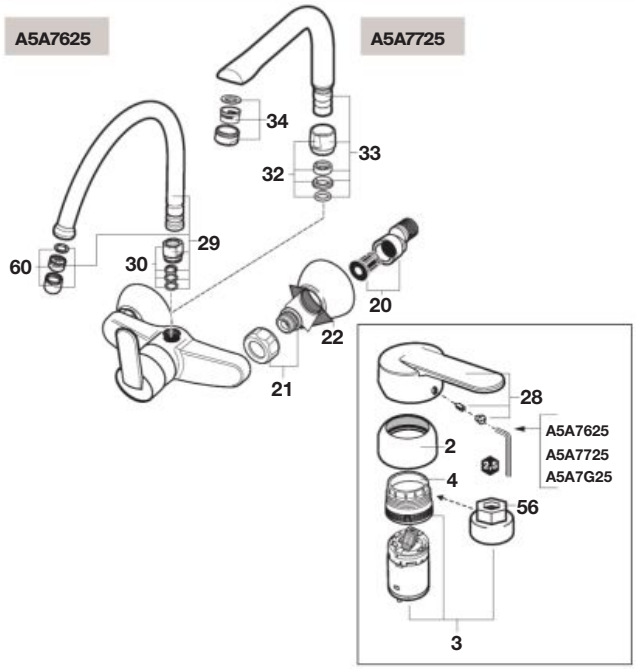

Grifería para cocina / Kitchen faucet

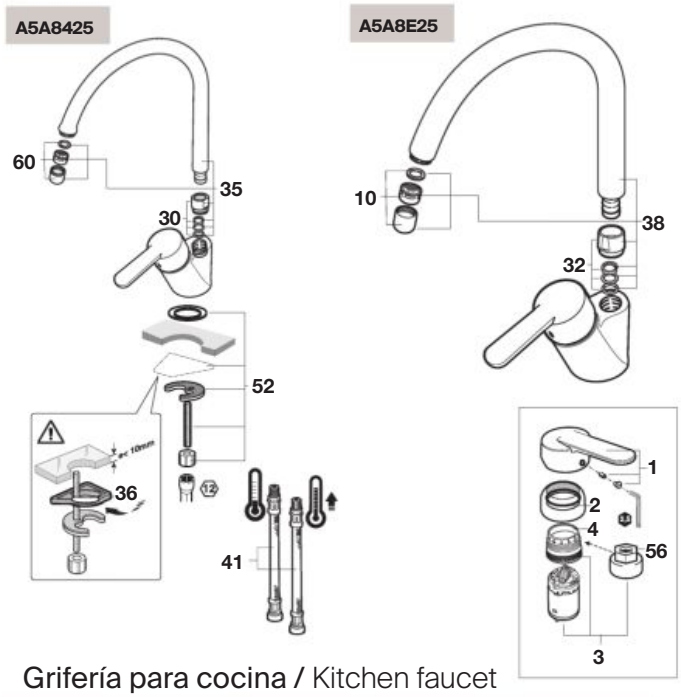

Grifería para cocina / Kitchen faucet

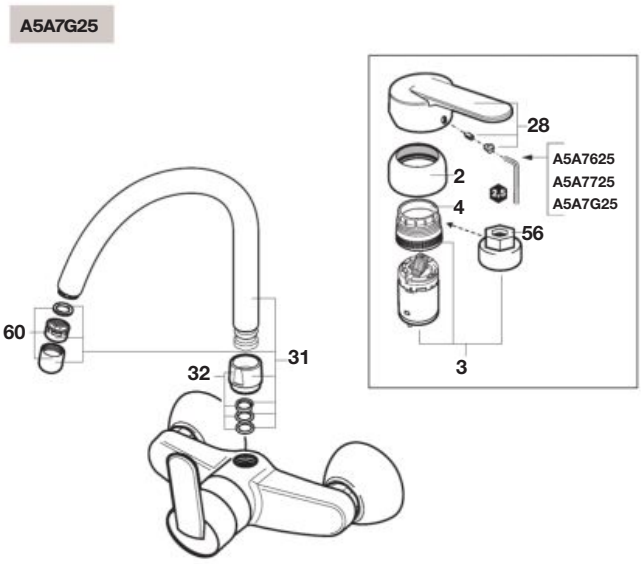

Grifería para cocina / Kitchen faucet

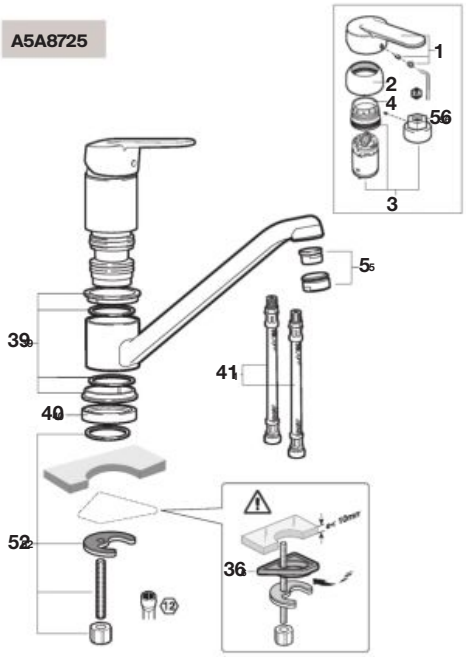

		€
1	AG0003400R	28,50
2	AG0085300R	18,00
3	AG0077807R	42,10
4	A525023507	4,23
5	A525004700	7,44
6	AG0003600R	7,61
7	A525004403	7,92
8	AG0096409R	13,90
9	A525094707	16,90
10	A525010900	6,24
11	AG0075200R	16,80
12	AG0085700R	16,20
13	AG0163600R	12,40

		€
14	AG0200600R	17,40
15	AG0114300R	4,44
16	A525005507	7,44
17	A525005800	7,44
18	A525007700	8,75
19	AG0105900R	8,97
20	AG0103908R	17,30
21	AG0002500R	15,60
22	AG0085400R	8,41
23	AG0116700R	4,36
24	AG0116500R	13,90
25	AG0134907R	6,77
26	A525009800	27,10

		€
27	AG0036800R	3,71
28	AG0003500R	12,00
29	AG0024100R	52,70
30	AG0085500R	13,50
31	AG0001600R	67,40
32	AG0071500R	27,10
33	AG0114200R	97,10
34	AG0055100R	23,50
35	AG0002200R	45,00
36	AG0101207R	2,35
37	AG0085803R	9,55
38	AG0190200R	65,30
39	AG0004407R	2,23

		€
40	AG0085600R	5,50
41	AG0061409R	31,90
42	AG0122400R	17,10
44	AG0109709R	8,77
45	AG0000703R	12,00
46	AG0031700R	26,70
47	AG0078003R	12,90
48	A525008503	8,41
49	AG0118308R	12,50
50	A525005900	59,20
51	AG0001907R	11,00
52	A525006903	8,56
53	A525006500	23,30

		€
54	A525002700	47,20
55	A525002800	37,60
56	A525005407	7,44
57	AG0075300R	28,80
58	AG0096200R	7,48
59	A525087300	18,90
60	A525006600	7,44
61	A525023200	11,90
62	AG0096307R	6,45
63	AG0141207R	19,20
64	A525007800	11,10

Victoria

Grifería para cocina / Kitchen faucet

A5A8925

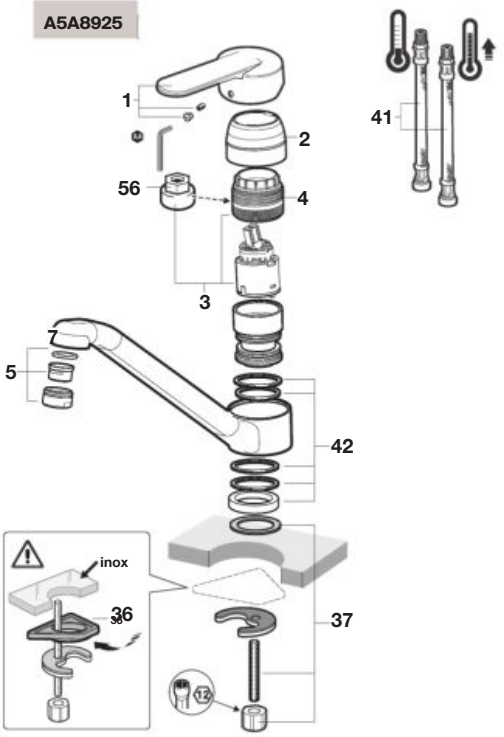

Grifería para cocina / Kitchen faucet

A5A8125

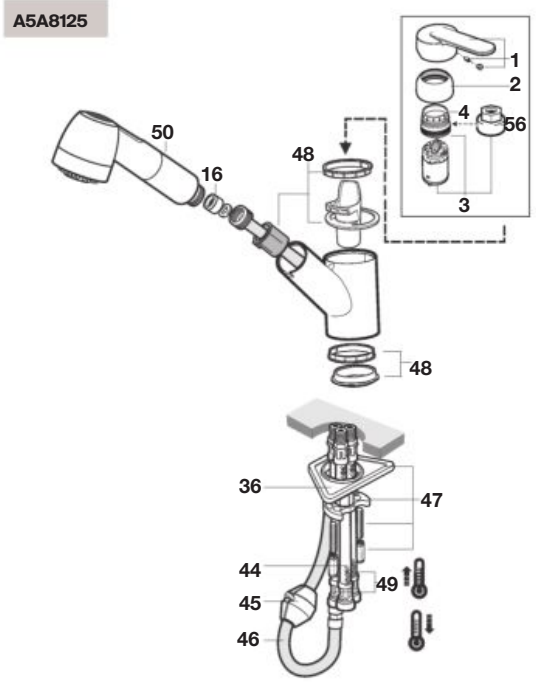

		€
1	**AG0003400R**	28,50
2	**AG0085300R**	18,00
3	**AG0077807R**	42,10
4	**A525023507**	4,23
5	**A525004700**	7,44
6	**AG0003600R**	7,61
7	**A525004403**	7,92
8	**AG0096409R**	13,90
9	**A525094707**	16,90
10	**A525010900**	6,24
11	**AG0075200R**	16,80
12	**AG0085700R**	16,20
13	**AG0163600R**	12,40

		€
14	**AG0200600R**	17,40
15	**AG0114300R**	4,44
16	**A525005507**	7,44
17	**A525005800**	7,44
18	**A525007700**	8,75
19	**AG0105900R**	8,97
20	**AG0103908R**	17,30
21	**AG0002500R**	15,60
22	**AG0085400R**	8,41
23	**AG0116700R**	4,36
24	**AG0116500R**	13,90
25	**AG0134907R**	6,77
26	**A525009800**	27,10

		€
27	**AG0036800R**	3,71
28	**AG0003500R**	12,00
29	**AG0024100R**	52,70
30	**AG0085500R**	13,50
31	**AG0001600R**	67,40
32	**AG0071500R**	27,10
33	**AG0114200R**	97,10
34	**AG0055100R**	23,50
35	**AG0002200R**	45,00
36	**AG0101207R**	2,35
37	**AG0085803R**	9,55
38	**AG0190200R**	65,30
39	**AG0004407R**	2,23

		€
40	**AG0085600R**	5,50
41	**AG0061409R**	31,90
42	**AG0122400R**	17,10
44	**AG0109709R**	8,77
45	**AG0000703R**	12,00
46	**AG0031700R**	26,70
47	**AG0078003R**	12,90
48	**A525008503**	8,41
49	**AG0118308R**	12,50
50	**A525005900**	59,20
51	**AG0001907R**	11,00
52	**A525006903**	8,56
53	**A525006500**	23,30

		€
54	**A525002700**	47,20
55	**A525002800**	37,60
56	**A525005407**	7,44
57	**AG0075300R**	28,80
58	**AG0096200R**	7,48
59	**A525087300**	18,90
60	**A525006600**	7,44
61	**A525023200**	11,90
62	**AG0096307R**	6,45
63	**AG0141207R**	19,20
64	**A525007800**	11,10

Victoria Plus

Grifería para cocina / Kitchen faucet

A5A844F

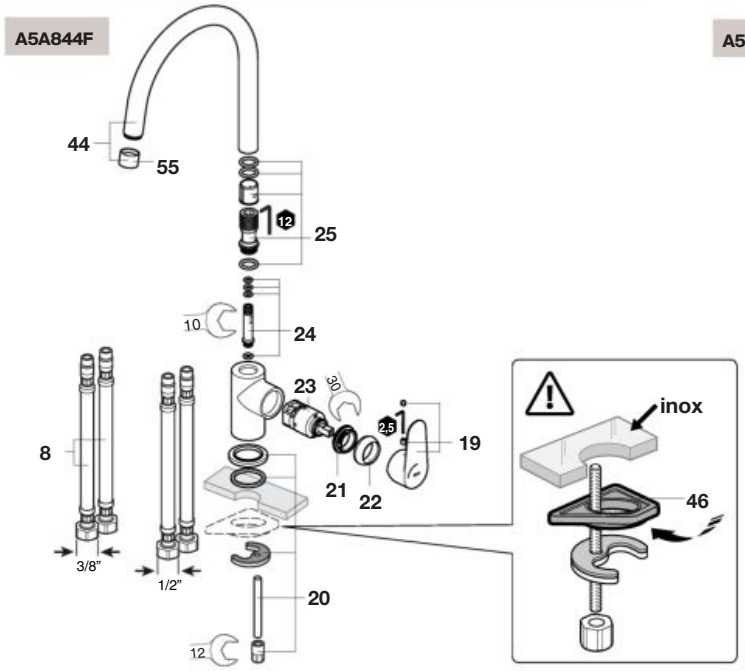

Grifería para cocina / Kitchen faucet

A5A764F

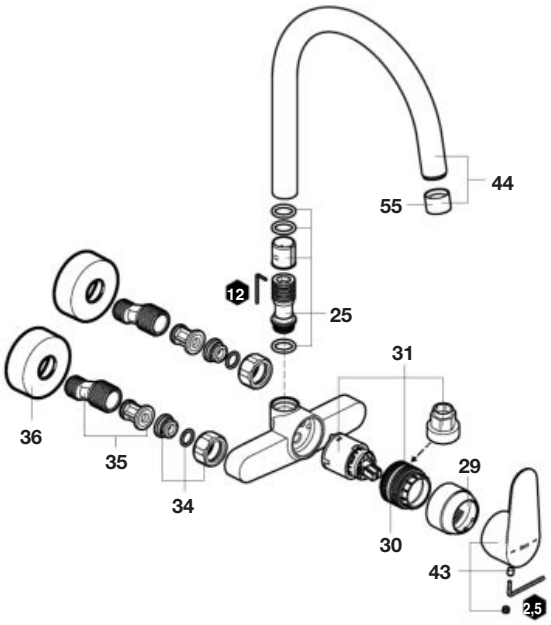

Grifería para cocina / Kitchen faucet

A5A894F

A5A8E4F

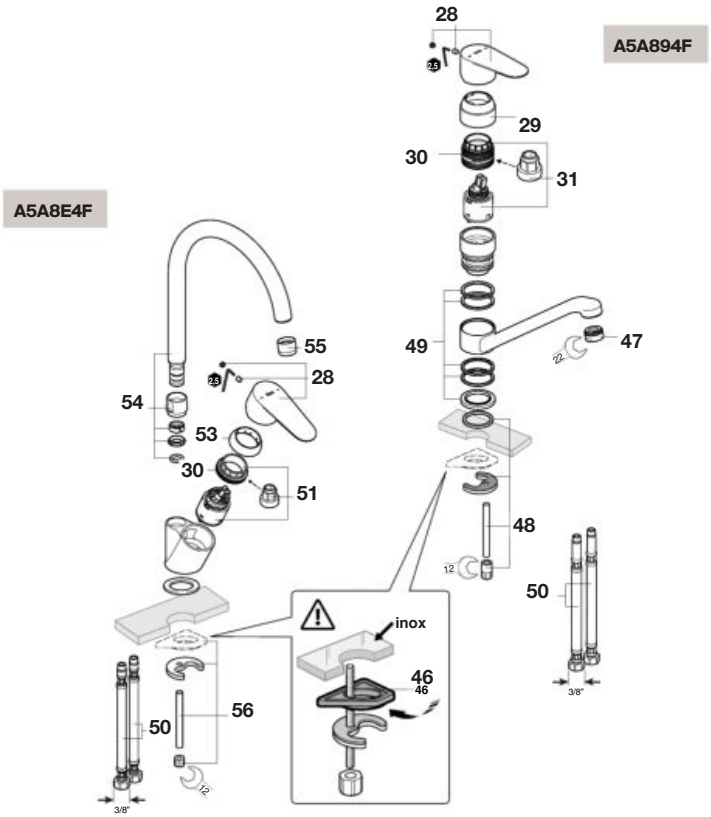

		€
8	**AG0119708R**	16,40
19	**AG0240700R**	20,00
20	**AG0240800R**	11,20
21	**AG0240900R**	5,05
22	**AG0241000R**	3,30
23	**AG0241100R**	16,80
24	**AG0241200R**	17,30

			€
25		**AG0226000R**	20,60
28		**AG0241400R**	17,10
29		**AG0116400R**	6,18
30		**A525023507**	4,23
31		**AG0110607R**	9,98
34	2 un	**AG0002500R**	15,60
35	2 un	**AG0103908R**	17,30

			€
36	2 un	**AG0116800R**	9,26
43		**AG0241700R**	12,30
44		**AG0225800R**	45,20
46		**AG0101207R**	2,35
47		**AG0055100R**	23,50
48		**AG0085803R**	9,55
49		**AG0122400R**	17,10

		€
50	**A525020309**	15,00
51	**AG0077807R**	42,10
53	**AG0085300R**	18,00
54	**AG0190200R**	65,30
55	**A525006600**	7,44
56	**A525006903**	8,56

Inversores
Inverters

A525166703

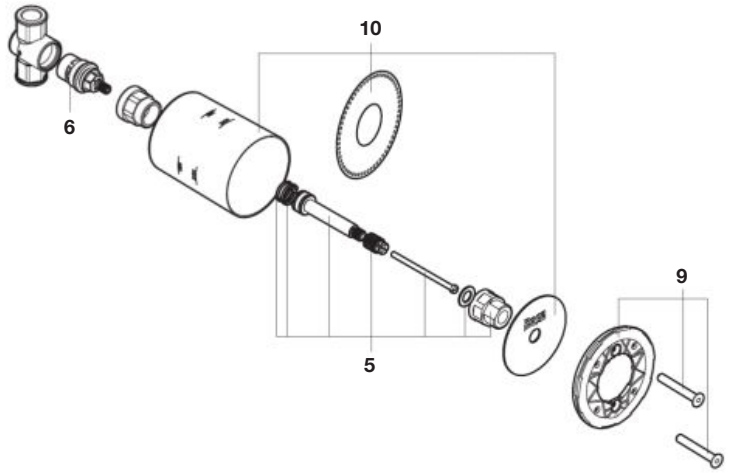

A525166803

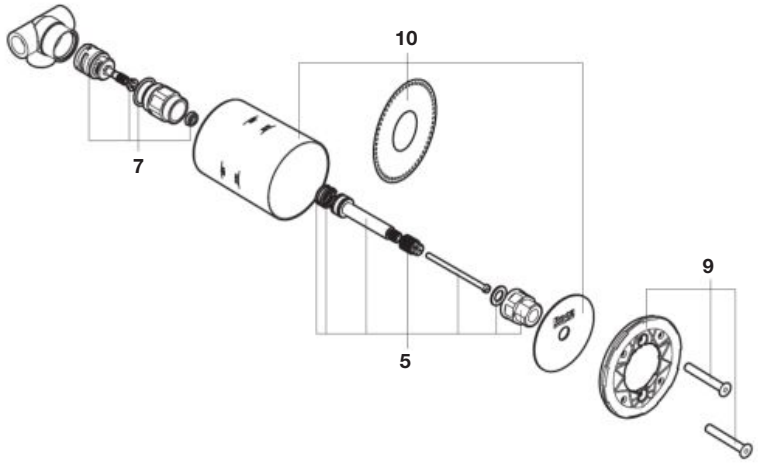

A525166903

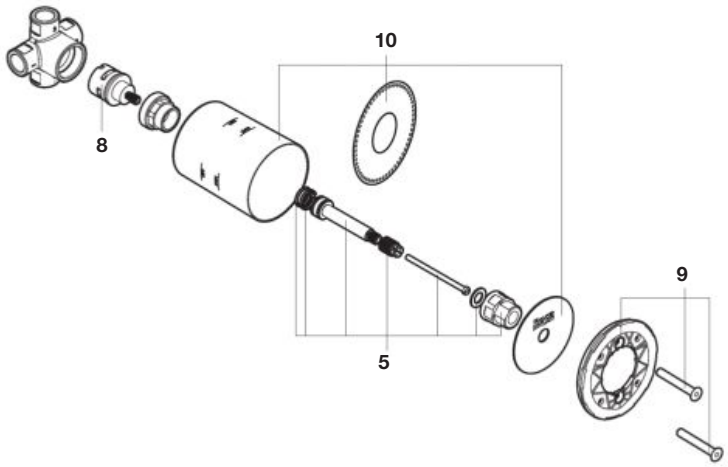

		€
1.1	**AG0177500R**	22,30
1.2	**AG0198700R**	22,30
1.3	**AG0198800R**	22,30
2	**AG0157300R**	38,60
3.1	**AG0177600R**	24,20

		€
3.2	**AG0177400R**	24,20
3.3	**AG0198900R**	24,20
4	**AG0157400R**	46,20
5	**AG0176800R**	80,80
6	**AG0176900R**	30,90

		€
7	**AG0162700R**	22,10
8	**AG0163700R**	71,10
9	**AG0177700R**	17,00
10	**AG0176700R**	32,00

Desviadores
Diverters

A5A084AC00

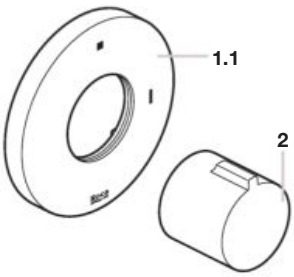

A5A094AC00

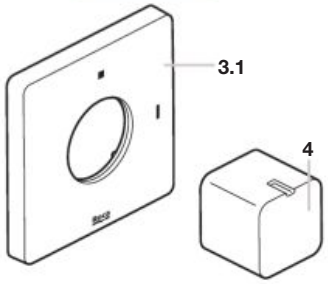

A5A0A4AC00

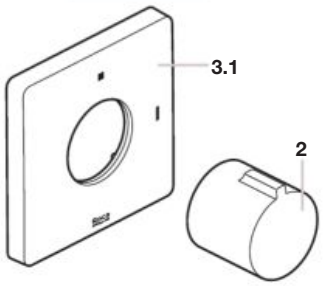

A5A154AC00

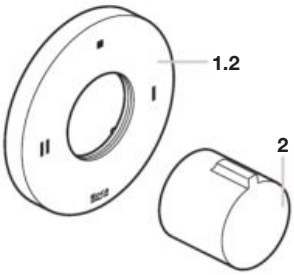

A5A164AC00

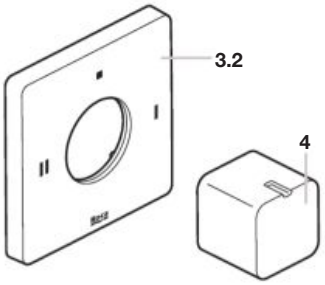

A5A1A4AC00

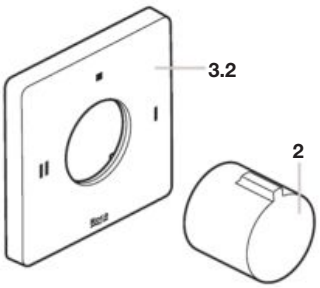

A5A184AC00

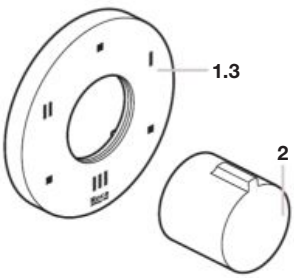

A5A194AC00

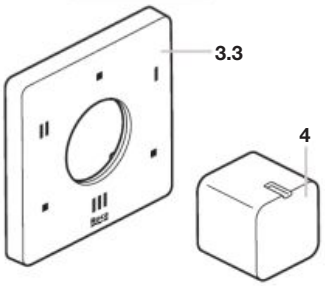

A5A1B4AC00

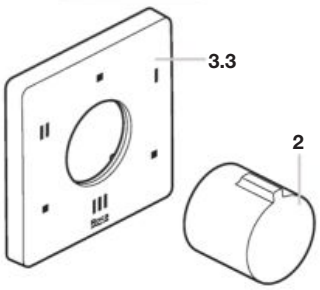

		€
1.1	**AG0177500R**	22,30
1.2	**AG0198700R**	22,30
1.3	**AG0198800R**	22,30
2	**AG0157300R**	38,60
3.1	**AG0177600R**	24,20

		€
3.2	**AG0177400R**	24,20
3.3	**AG0198900R**	24,20
4	**AG0157400R**	46,20
5	**AG0176800R**	80,80
6	**AG0176900R**	30,90

		€
7	**AG0162700R**	22,10
8	**AG0163700R**	71,10
9	**AG0177700R**	17,00
10	**AG0176700R**	32,00

Accesorios / Accesories



Accesorios de metal / Metallic accesories

739 **Armani / Casa - Island**

740 **Tempo**

742 **Allegro**

743 **Carmen**

744 **Hotels Classic**

746 **Hotels**

749 **Hotels Square**

750 **Hotels Round**

753 **Hotels**

756 **Rubik**

757 **Record**

758 **Victoria**

761 **Victoria (old)**

766 **Sonata**

768 **Compas**

771 **Otros accesorios de metal /** Other metallic accesories

773 **Superinox mate /** Matt superinox

Accesorios de acero inoxidable / Stainless steel accesories

774 **Otros accesorios de acero inoxidable /** Other stainless steel accesories

Accesorios de porcelana / Porcelain accesories

775 **Accesorios de porcelana /** Porcelain accesories

Accesorios de resina / Resin accesories

776 **Ona**

777 **Rondo**

778 **Ice**

Otros accesorios y toalleros / Other accessories and towel rails

779 **Extra**



ONA

Armani / Casa - Island

Accesorios / Accessories

A8164510..

A8164570..	760 mm
A8164560..	540 mm
A8164550..	400 mm
A8164540..	290 mm

A8164610..	760 mm
A8164600..	540 mm
A8164590..	400 mm
A8164580..	290 mm



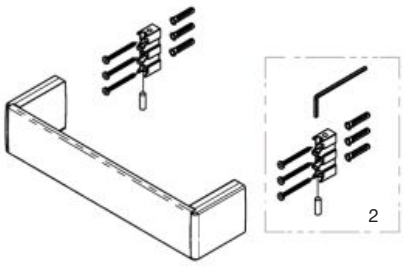

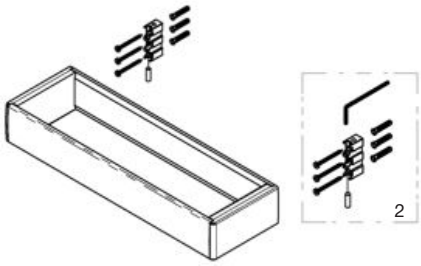

A8166230...

A8166270...

A8166280...

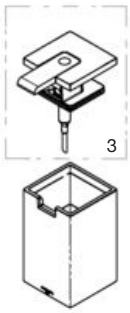

A8166200..

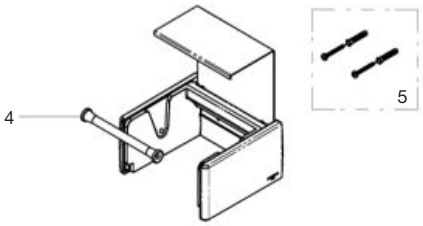

Las últimas posiciones de cada código indican el acabado (color):
The lasts positions indicates the finish (colour):

Producto Product	**Recambio** Spare part	**Acabado** Finished
01	**00**	**Cromado /** Chrome
39	**VG**	**Nero /** Nero
40	**VC**	**Greige /** Greige
57	**VS**	**Cromado cepillado /** Brushed Chrome

		€
1	**A840752000**	N.D.
2	**A840750000**	10,20
3	**AA0007400R**	65,00
	AA00074VGR	122,00
	AA00074VCR	107,00
	AA00074VSR	60,70
4	**AA0007500R**	4,17
5	**A840729000**	5,23

Tempo

Recipientes / Recipients

MODELOS DE PRODUCTO ACABADO / Finished products models

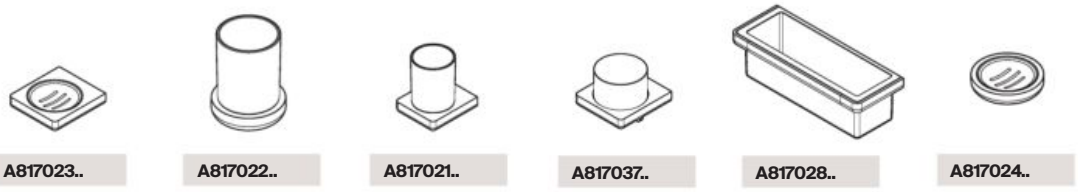

A817023.. **A817022..** **A817021..** **A817037..** **A817028..** **A817024..**

A817023..

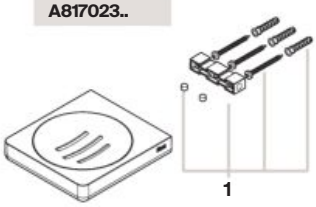

A817022..



A817021..
A817037..

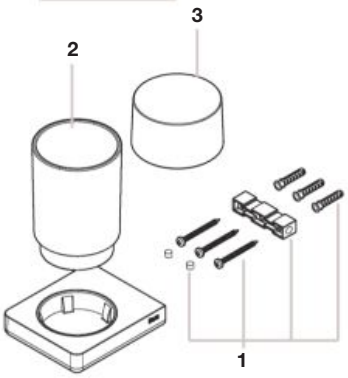

A817028..

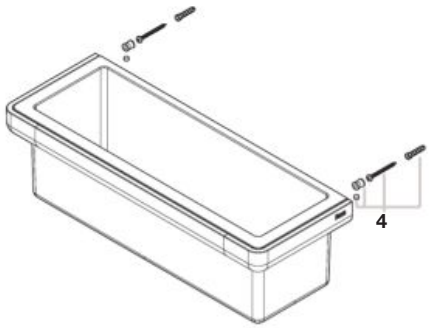

Portarrollos y repisas / Toilet roll holders and shelves

MODELOS DE PRODUCTO ACABADO / Finished products models

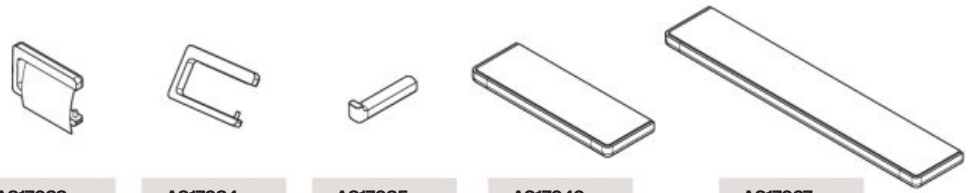

A817033.. **A817034..** **A817035..** **A817040..** **A817027..**

A817033..
A817034..

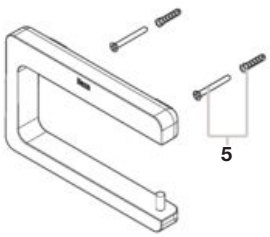

A817035..

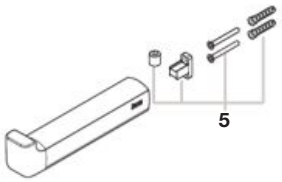

A817027..
A817040..

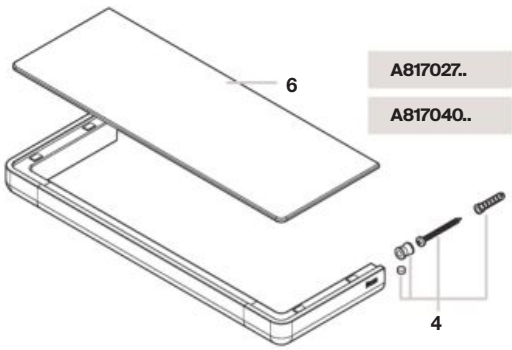

				€
1		**AA0006700R**		6,00
2		**AA0006600R**		15,20
3		**AA0007100R**		21,80
4	2 un	**AA0007000R**		3,65
5		**AA0006500R**		2,78
6		**AA0007200R**	600 mm	21,50
		AA0007300R	300 mm	14,30

Las últimas posiciones de cada código indican el acabado (color):
The lasts positions indicates the finish (colour):

Producto Product	**Recambio** Spare part	**Acabado** Finished
01	**00**	**Cromado /** Chrome
CN	**CN**	**Negro titanio /** Black titanium
RG	**RG**	**Oro Rosado /** Rose gold
NM	**NM**	**Negro tit. cepillado /** Brushed tit. black
VA	**VA**	**Oro cepillado /** Brushed brass
NB	**NB**	**Negro mate /** Matt black

Tempo

Escobillas y jaboneras / Brushes and soap dishes

MODELOS DE PRODUCTO ACABADO / Finished products models

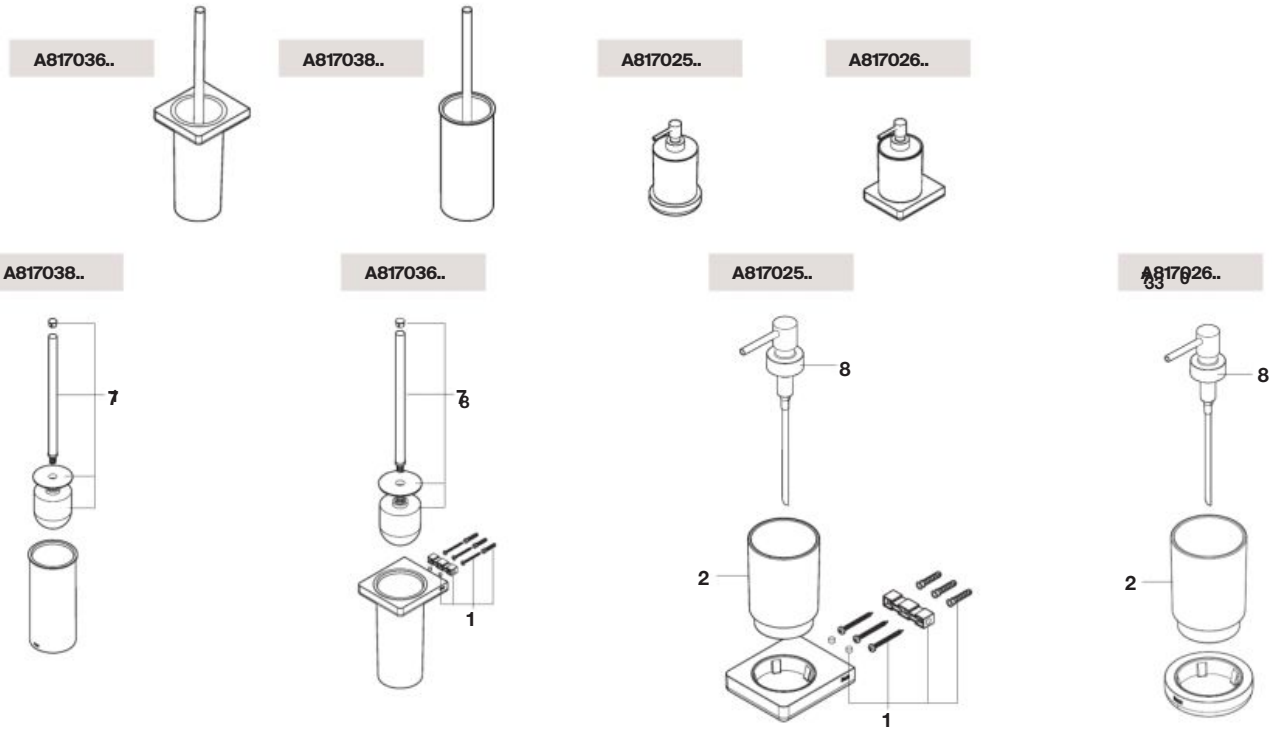

Toalleros / Towel rails

MODELOS DE PRODUCTO ACABADO / Finished products models

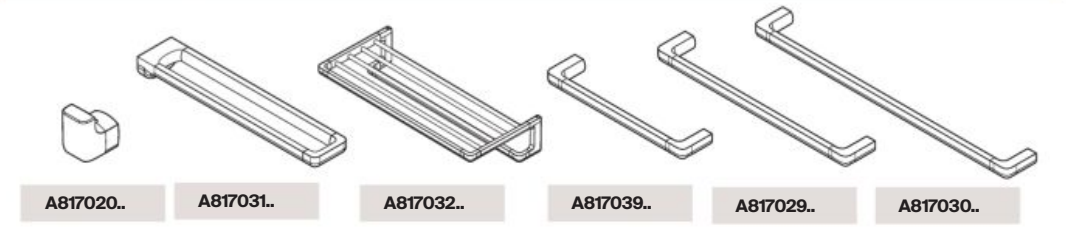

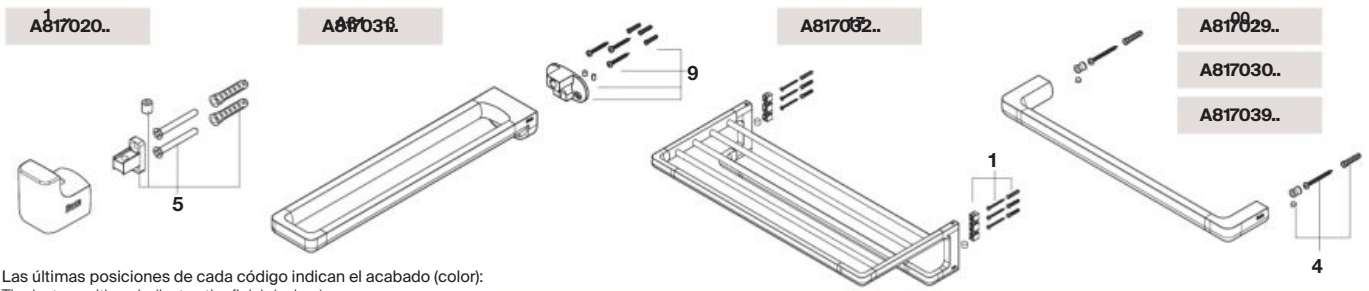

Las últimas posiciones de cada código indican el acabado (color):
The lasts positions indicates the finish (colour):

Producto Product	Recambio Spare part	Acabado Finished
01	00	Cromado / Chrome
CN	CN	Negro titanio / Black titanium
RG	RG	Oro Rosado / Rose gold
NM	NM	Negro tit. cepillado / Brushed tit. black
VA	VA	Oro cepillado / Brushed brass
NB	NB	Negro mate / Matt black

			€
1		**AA0006700R**	6,00
2		**AA0006600R**	15,20
4	2 un	**AA0007000R**	3,65
5		**AA0006500R**	2,78

				€
7		**AA0006800R**	Cromado / Chrome	16,20
		AA0006894R	Negro titanio / Black titanium	38,30
		AA00068RGR	Oro rosado / Rose gold	29,30
		AA00068NMR	Negro tit. cepillado/ Brushed tit. black	23,80
		AA00068VAR	Oro cepillado / Brushed brass	15,30
		AA00068NBR	Negro mate / Matt black	10,70

				€
8		**AA0002100R**	Cromado / Chrome	16,20
		AA0002194R	Negro titanio / Black titanium	23,80
		AA00021RGR	Oro rosado / Rose gold	23,30
		AA00021NMR	Negro tit. cepillado/ Brushed tit. black	17,00
		AA00021VAR	Oro cepillado / Brushed brass	12,50
		AA00021NMR	Negro mate/ Matt black	17,00
9		**AA0006900R**		9,23

Allegro

Accesorios / Accessories

A817860..

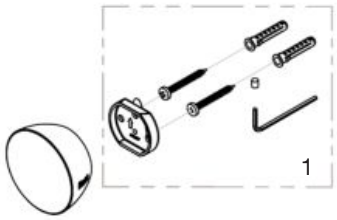

A817862..

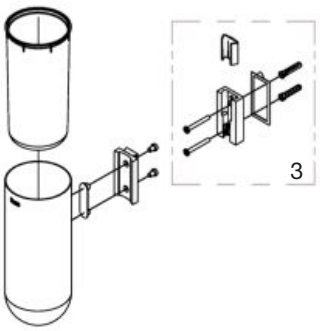

A817866..

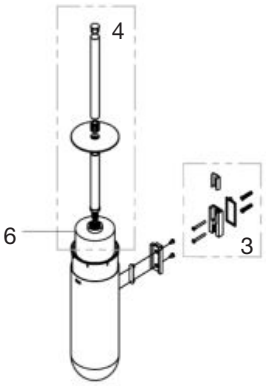

A817864..

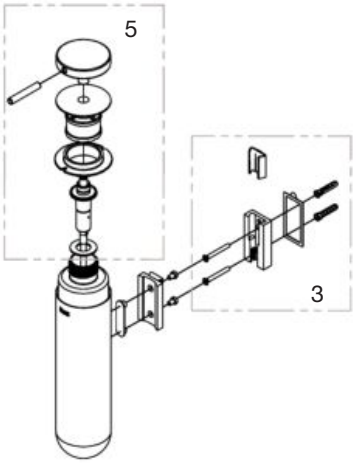

A817865..

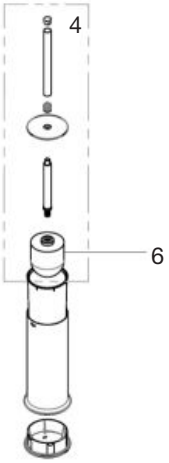

A817863..



A817867..

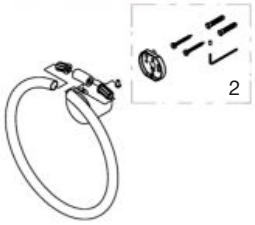

A817868..

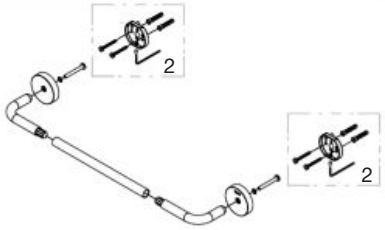

A817871..



		€
1	**AA0021200R**	2,47
2	**AA0021300R**	2,60
3	**AA00214NBR**	6,58
	AA00214B0R	7,40
4	**AA00215NBR**	13,00
	AA00215B0R	13,50
5	**AA00216NBR**	19,00
	AA00216B0R	19,30
6	**AA0001900R**	3,32

Las últimas posiciones de cada código indican el acabado (color):
The lasts positions indicates the finish (colour):

Producto	**Recambio**	**Acabado**
Product	Spare part	Finished

NB0	**NBR**	Negro mate / Matt black
B00	**B0R**	Blanco mate / Matt white

Carmen

Recambios específicos / Specific spare parts

MODELOS DE PRODUCTO ACABADO
Finished products models



A817001001



A817002001



A817003001



A817004001



A817008001



A817005001



A817006001



A817007001



A817001001
A817002001
A817003001
A817004001
A817005001
A817006001
A817007001



A817008001



A817001001



A817002001
A817005001
A817003001
A817006001
A817004001
A817007001

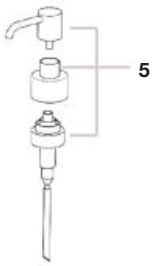

A817006001

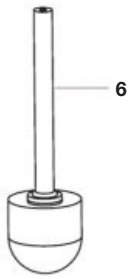

A817008001

		€
1	**AA0009200R**	3,45
2	**AA0009500R**	6,05
3	**AA0009300R**	22,00
4	**AA0009400R**	10,90
5	**AA0009600R**	16,50
6	**AA0009800R**	14,20

Hotels Classic

Toalleros y portarollos / Towelrails and toilet roll

A815422001	600 mm
A815420001	450 mm

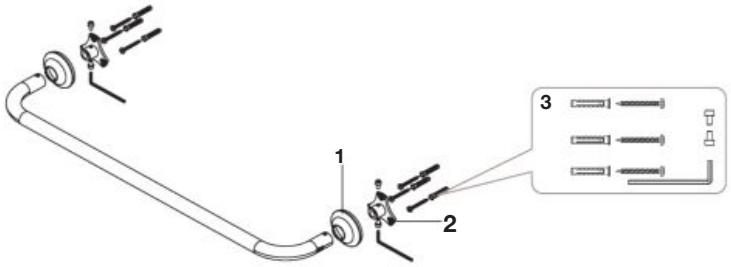

A815429001

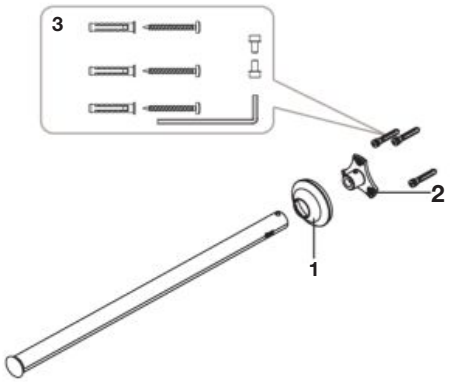

A815436001

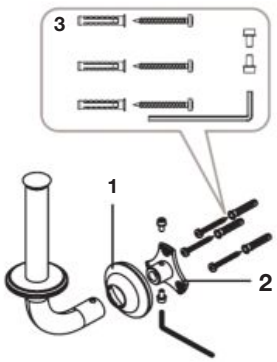

A815425001

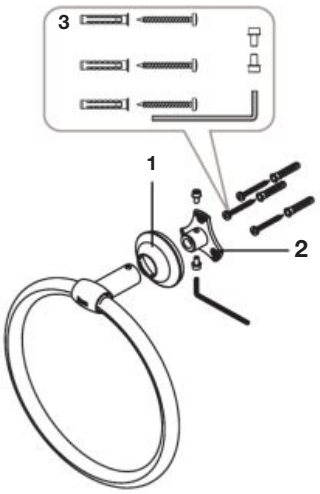

A815491001

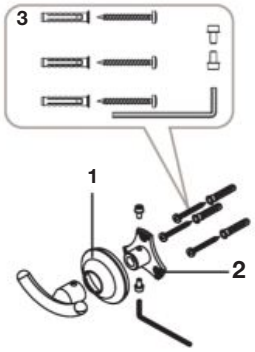

		€
1	**A840544001**	2,85
2	**A840221000**	6,70
3	**A848056000**	1,35

Hotels Classic

Recambios específicos / Specific spare parts

A815480001

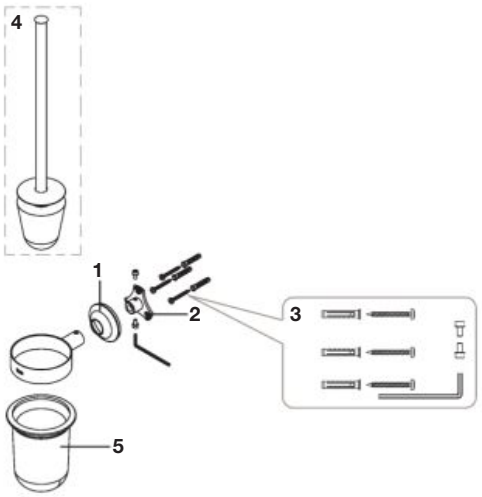

A815486001

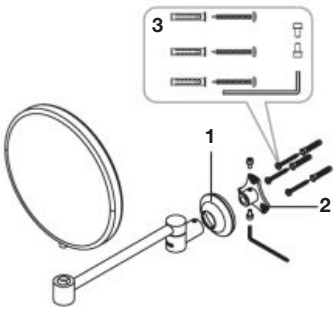

A815410001

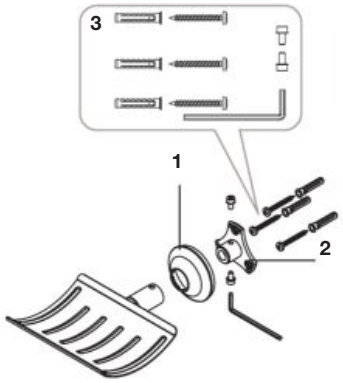

A815413001

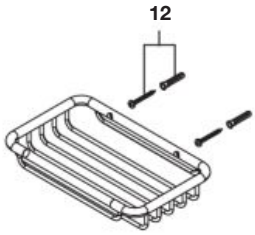

A815414001

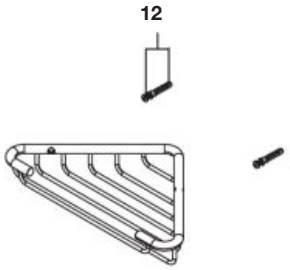

A815437001

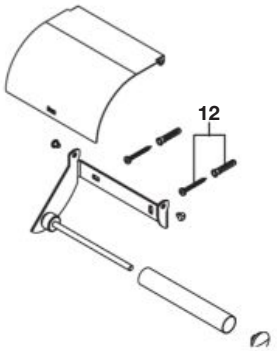

		€
1	**A840544001**	2,85
2	**A840221000**	6,70
3	**A848056000**	1,35

		€
4	**A840709001**	30,20
5	**A840352000**	10,40
12	**A840729000**	5,23

Hotels

Recambios específicos / Specific spare parts

A816727001	300 mm
A816728001	450 mm
A816729001	600 mm
A816376001	700 mm

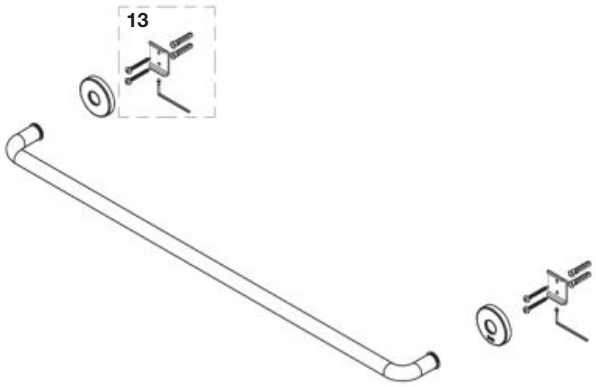

A816379001

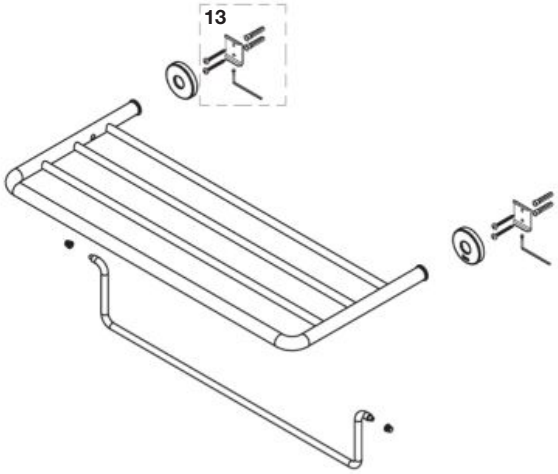

A816386001

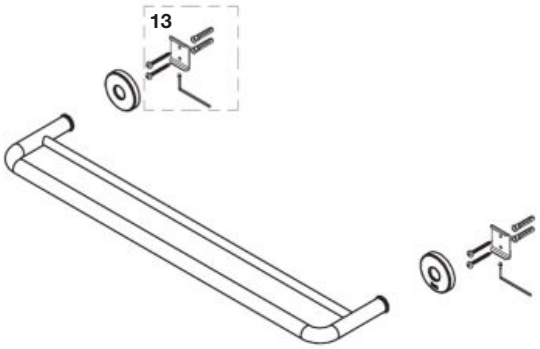

A816378001

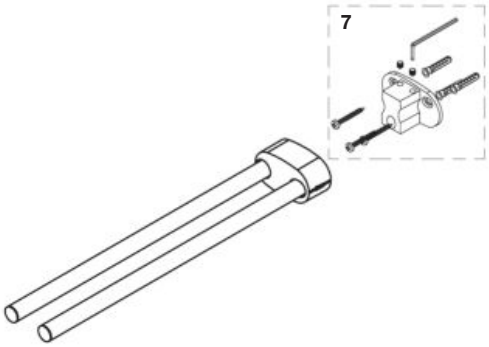

		€
7	**A840731000**	15,70
13	**A840730000**	5,23

Hotels

Recambios específicos / Specific spare parts

A816722001
A816390001

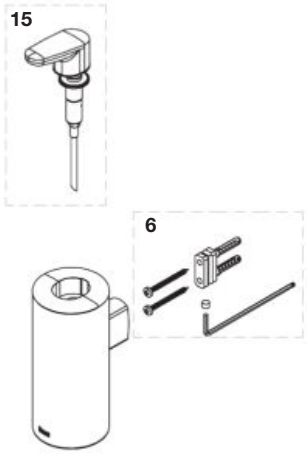

A816723001

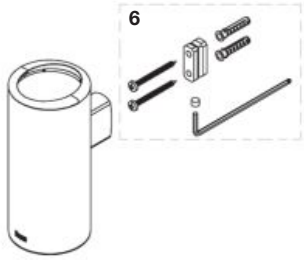

A816372001

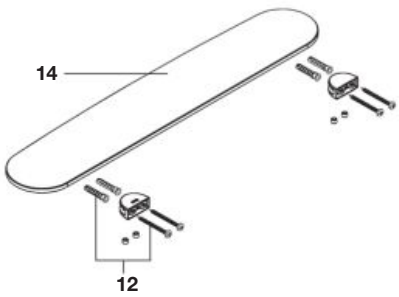

A816380001

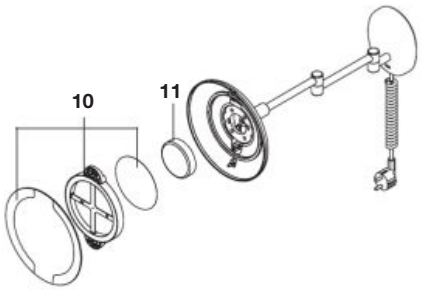

A816721001

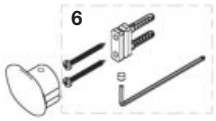

			€
6		**A840727000**	5,23
10		**A840733000**	31,50
11		**A840732000**	65,70

			€
12	2 un	**A840729000**	5,23
14		**A840728000**	15,70
15		**AA0011400R**	20,00

Hotels

Recambios específicos / Specific spare parts

A816369001

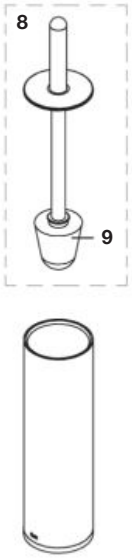

A816726001

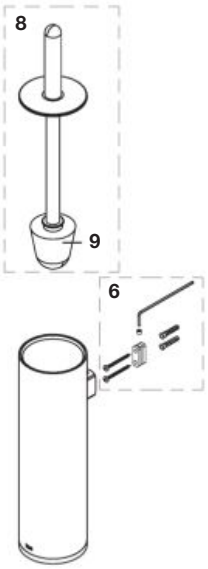

A816371001

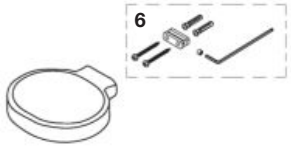

A816398001

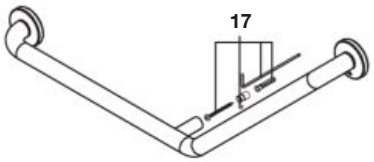

A816400001

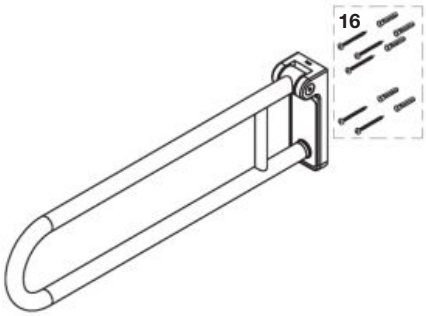

Á816383001

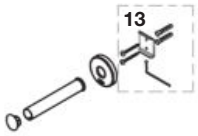

A816725001



		€
6	**A840727000**	5,23
8	**A840735001**	42,20
9	**A840710000**	8,42

		€
13	**A840730000**	5,23
16	**A840736000**	15,70
17	**A840739000**	5,23

Hotels Square

Recambios específicos / Specific spare parts

A817601..

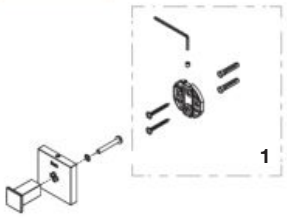

A817602..

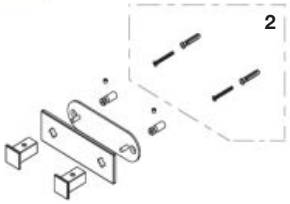

A817603..

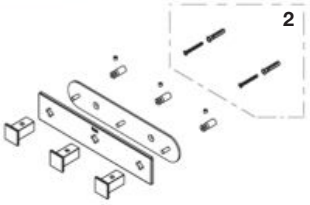

A817612..

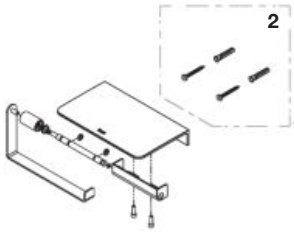

A817613..

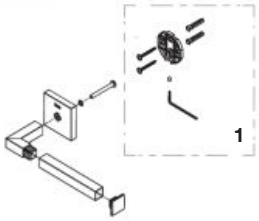

A817615..

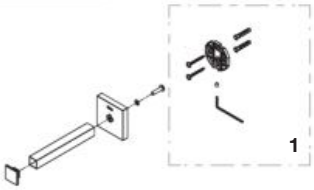

A817616..

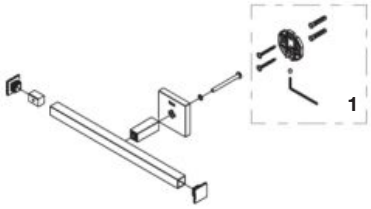

A817614..

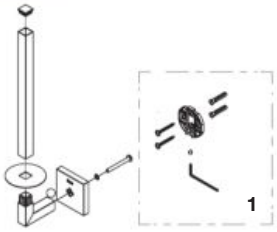

A817610..

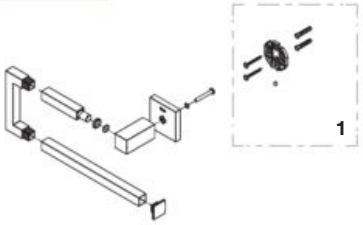

A817608.. 400 mm

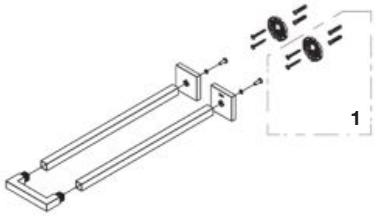

A817609..

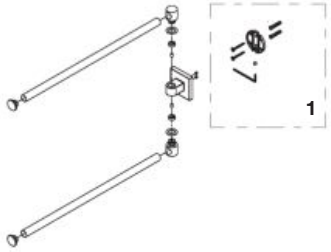

A817607..	300 mm
A817606..	450 mm
A817605..	600 mm
A817604..	750 mm

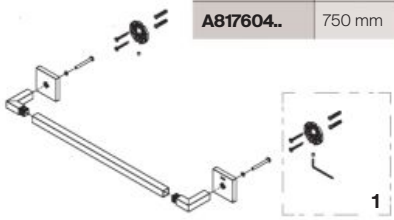

A817611..

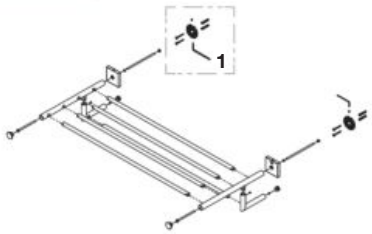

		€
1	**AA0018600R**	3,45
2	**A840737000**	5,23

Las últimas posiciones de cada código indican el acabado (color):
The lasts positions indicates the finish (colour):

Producto Product	**Recambio** Spare part	**Acabado** Finished
C00	**00R**	**Cromado /** Chrome
C40	**40R**	**Negro mate /** Matt Black
B00	**B0R**	**Blanco mate /** Matt White

Hotels Round

Accesorios Hotels Round / Hotels Round Accessories

A817570...

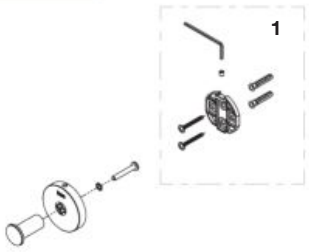

A817571...

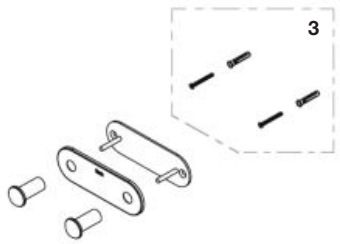

A817572..

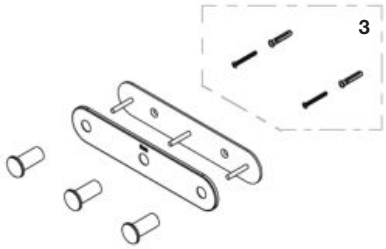

A817581...

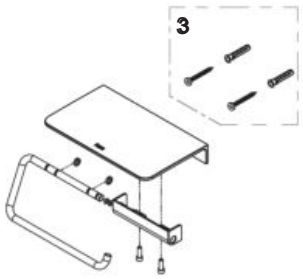

A817582...

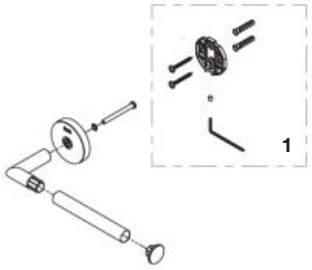

A817583...

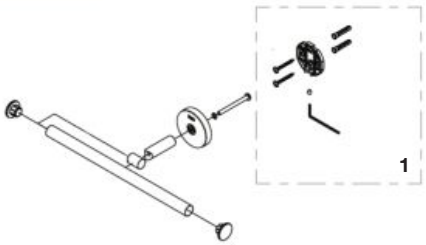

A817578...

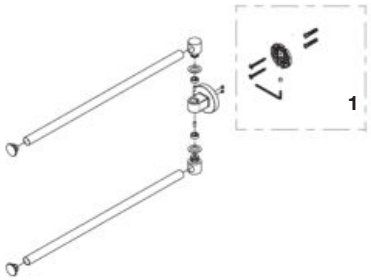

A817585...

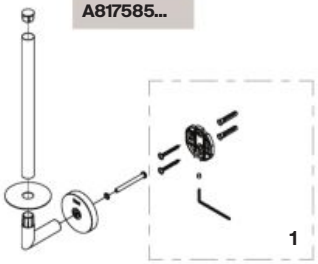

A817584...

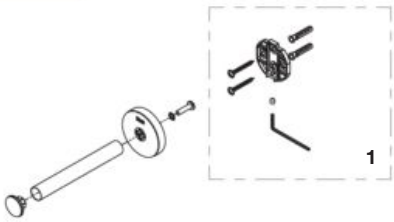

A817579..

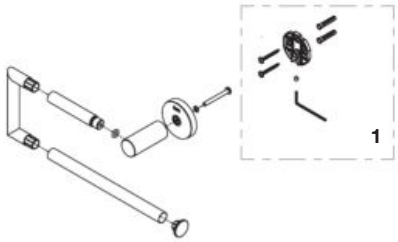

Las últimas posiciones de cada código indican el acabado (color):
The lasts positions indicates the finish (colour):

Producto Product	**Recambio** Spare part	**Acabado** Finished
C00	**00R**	Cromado / Chrome
C40	**NBR**	Negro mate / Matt Black
B00	**B0R**	Blanco mate / Matt White
SM0	**SMR**	Stainless steel / Inox
CN0	**CNR**	Negro titanio / Titanium Black
VA0	**VAR**	Oro cepillado / Brushed Brass
RG0	**RGR**	Oro rosado / Rose Gold

			€
1	**AA0018600R**		3,45
2	**AA0018700R**		2,97
3	**A840737000**		5,23
4	**AA0018800R**		4,23
5	**AA0018900R**		14,90
	AA00189NBR		9,53
	AA00189B0R		15,30
	AA00189SMR		10,30
	AA00189CNR		15,40
	AA00189VAR		14,30
	AA00189RGR		13,80

			€
6	**AA0019000R**		19,70
	AA00190NBR		14,80
	AA00190B0R		24,80
	AA00190SMR		12,40
	AA00190CNR		24,00
	AA00190VAR		14,30
	AA00190RGR		17,00
7	**AA0001900R**		3,32
18	**AA0019200R**	450 mm	17,70
	AA0019300R	600 mm	21,80

Hotels Round

Accesorios Hotels Round / Hotels Round Accessories

A817576...	300 mm
A817575...	450 mm
A817574...	600 mm
A817573...	700 mm

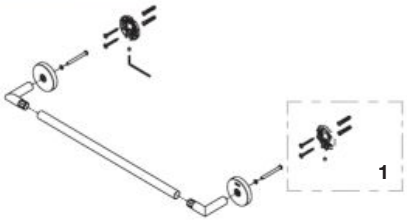

A817577...

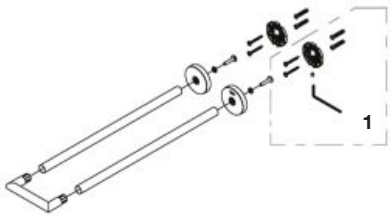

A817580...

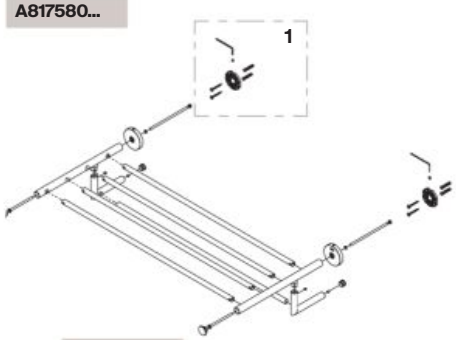

A817589...

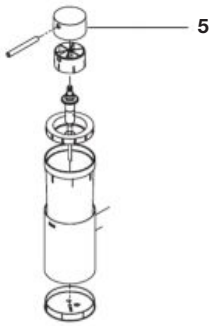

A817596...

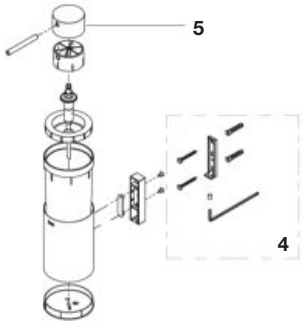

A817595...

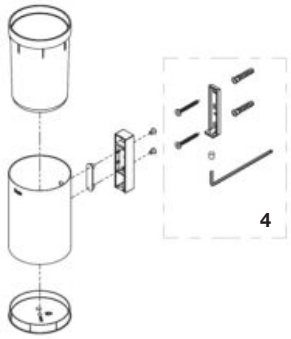

A817591...

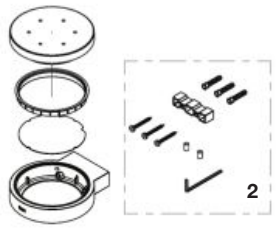

A817590...



Las últimas posiciones de cada código indican el acabado (color):
The lasts positions indicates the finish (colour):

Producto Product	**Recambio** Spare part	**Acabado** Finished
C00	**00R**	Cromado / Chrome
C40	**NBR**	Negro mate / Matt Black
B00	**B0R**	Blanco mate / Matt White
SM0	**SMR**	Stainless steel / Inox
CN0	**CNR**	Negro titanio / Titanium Black
VA0	**VAR**	Oro cepillado / Brushed Brass
RG0	**RGR**	Oro rosado / Rose Gold

			€
1	**AA0018600R**		3,45
2	**AA0018700R**		2,97
3	**A840737000**		5,23
4	**AA0018800R**		4,23
5	**AA0018900R**		14,90
	AA00189NBR		9,53
	AA00189B0R		15,30
	AA00189SMR		10,30
	AA00189CNR		15,40
	AA00189VAR		14,30
	AA00189RGR		13,80

			€
6	**AA0019000R**		19,70
	AA00190NBR		14,80
	AA00190B0R		24,80
	AA00190SMR		12,40
	AA00190CNR		24,00
	AA00190VAR		14,30
	AA00190RGR		17,00
7	**AA0001900R**		3,32
18	**AA0019200R**	450 mm	17,70
	AA0019300R	600 mm	21,80

Hotels Round

Accesorios Hotels Round / Hotels Round Accessories

A817586...

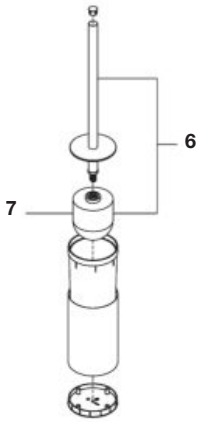

A817587...

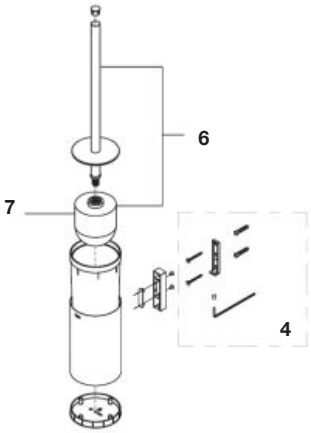

A817588...

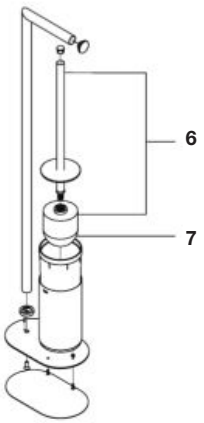

A817593...	450 mm
A817592...	600 mm

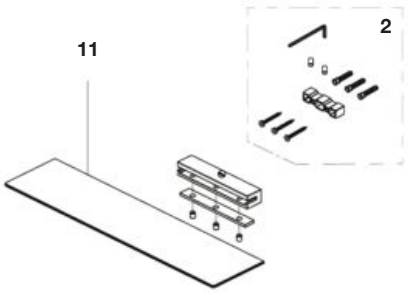

Las últimas posiciones de cada código indican el acabado (color):
The lasts positions indicates the finish (colour):

Producto Product	**Recambio** Spare part	**Acabado** Finished
C00	**00R**	Cromado / Chrome
C40	**NBR**	Negro mate / Matt Black
B00	**B0R**	Blanco mate / Matt White
SM0	**SMR**	Stainless steel / Inox
CN0	**CNR**	Negro titanio / Titanium Black
VA0	**VAR**	Oro cepillado / Brushed Brass
RG0	**RGR**	Oro rosado / Rose Gold

			€
1	**AA0018600R**		3,45
2	**AA0018700R**		2,97
3	**A840737000**		5,23
4	**AA0018800R**		4,23
5	**AA0018900R**		14,90
	AA00189NBR		9,53
	AA00189B0R		15,30
	AA00189SMR		10,30
	AA00189CNR		15,40
	AA00189VAR		14,30
	AA00189RGR		13,80

			€
6	**AA0019000R**		19,70
	AA00190NBR		14,80
	AA00190B0R		24,80
	AA00190SMR		12,40
	AA00190CNR		24,00
	AA00190VAR		14,30
	AA00190RGR		17,00
7	**AA0001900R**		3,32
18	**AA0019200R**	450 mm	17,70
	AA0019300R	600 mm	21,80

Hotels

Accesorios toallero eléctrico blanco / White Heated towel rail

A815496000 1200x500 mm 500 w



A815495000 800x500 mm 300 w

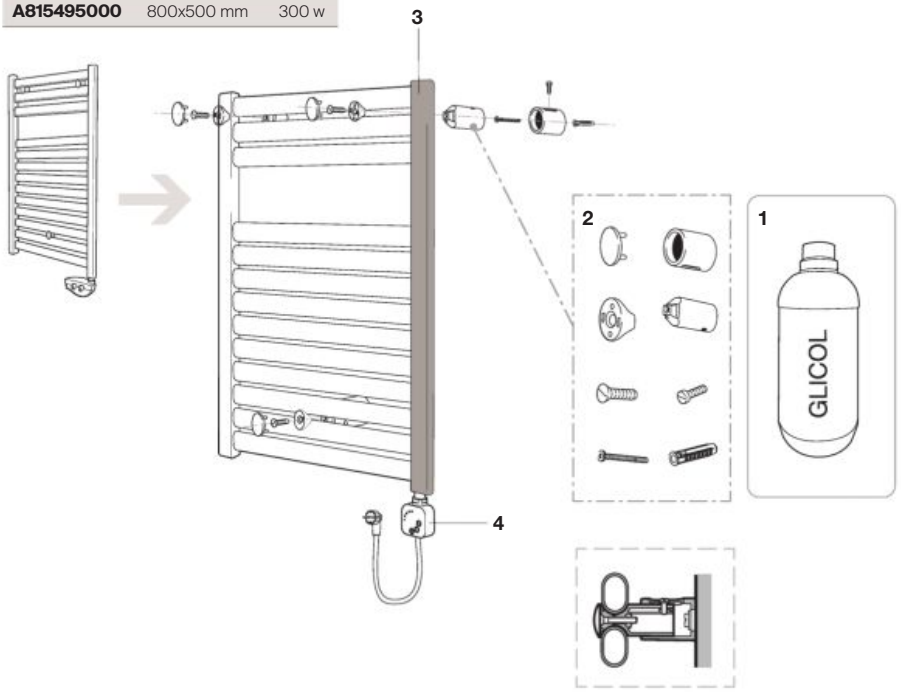

Accesorios toallero eléctrico cromado / Chrome Heated towel rail

A815497001 1500x500 mm 250 w



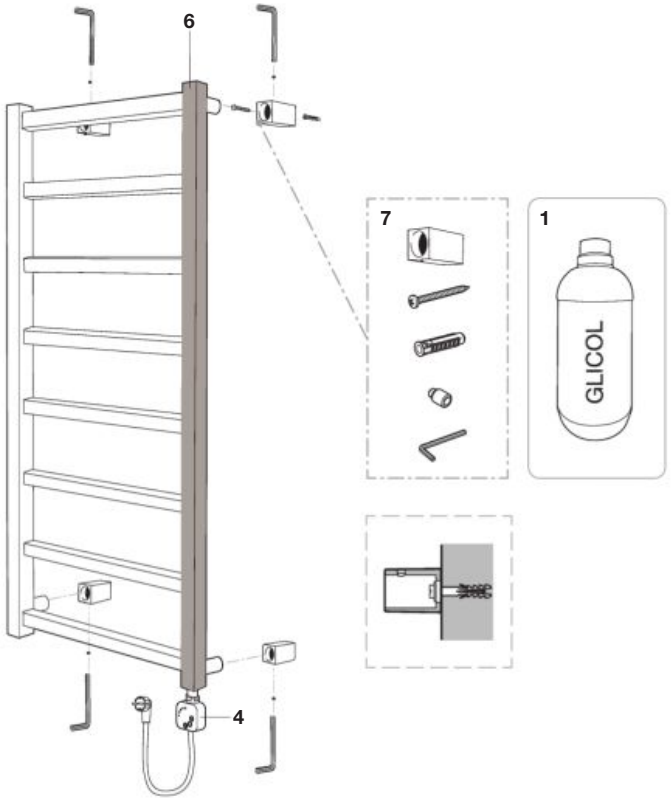

			€
1		**AR84068700**	34,30
2	3 un	**AR06012041**	N.D.
3 4		**AA00055B0R**	170,00
5 4		**AA00056B0R**	164,00
6 4		**AA0005700R**	164,00
7	4 un	**AR06012676**	91,80

Hotels

Accesorios toallero eléctrico / Heated towel rails accesories

A815502000	Blanco / White	300W	800x500mm
A815502001	Cromado / Chrome		
A815503000	Blanco / White	500W	1200X500mm
A815503001	Cromado / Chrome		

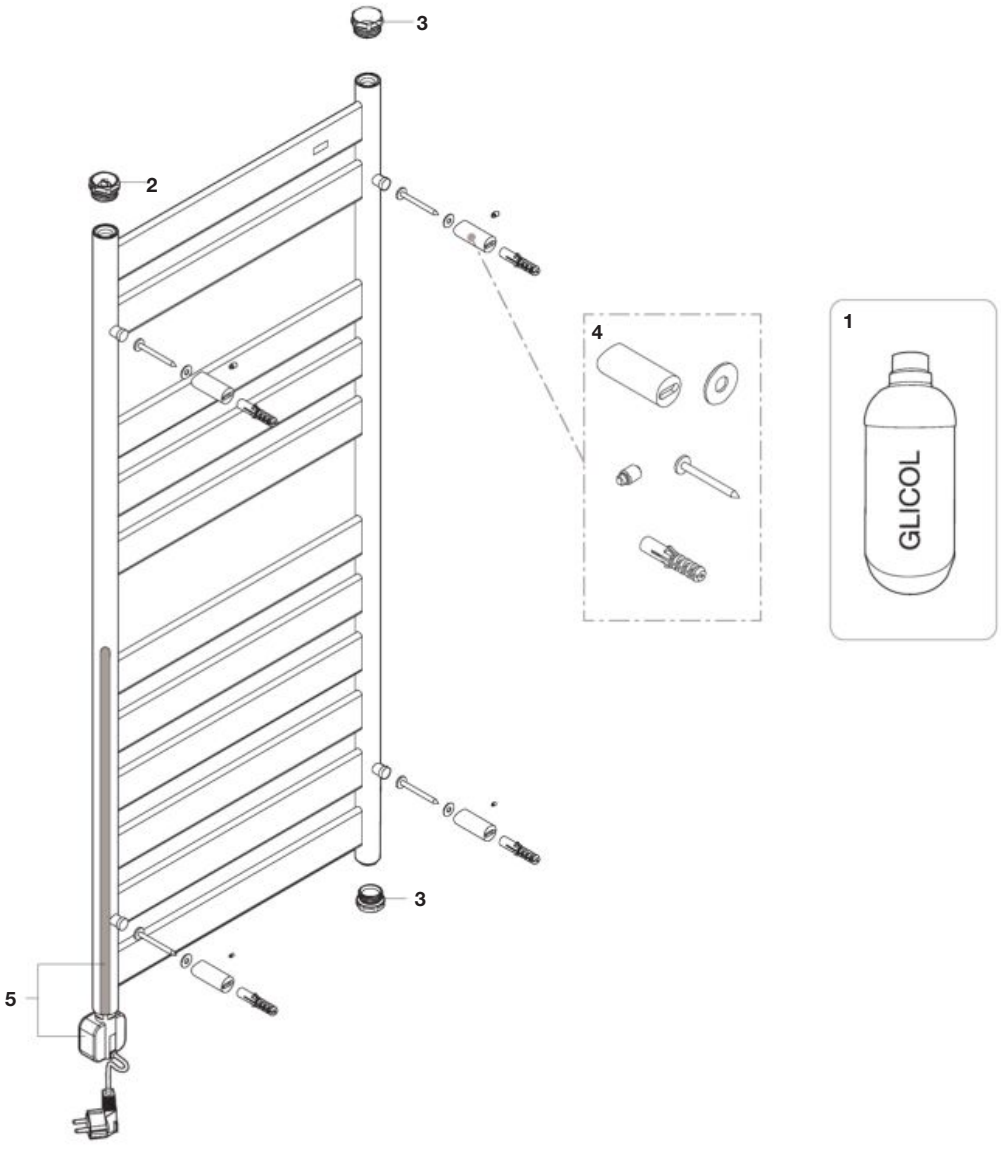

					€
1		**AR84068700**			34,30
2		**AA0006100R**			19,00
3					
4	4 un	**AA00062B0R**		Blanco / White	42,00
		AA0006300R		Cromado / Chrome	42,00
5		**AA00055B0R**	300W	Blanco / White	170,00
		AA0005700R		Cromado / Chrome	164,00
		AA00056B0R	500W	Blanco / White	164,00
		AA0005800R		Cromado / Chrome	170,00

Hotels

Toallero hidráulico Hotels / Hydraulic towel rail Hotels

A815508000	Blanco / White	800x500mm
A815508001	Cromado / Chrome	
A815509000	Blanco / White	1200X500mm
A815509001	Cromado / Chrome	

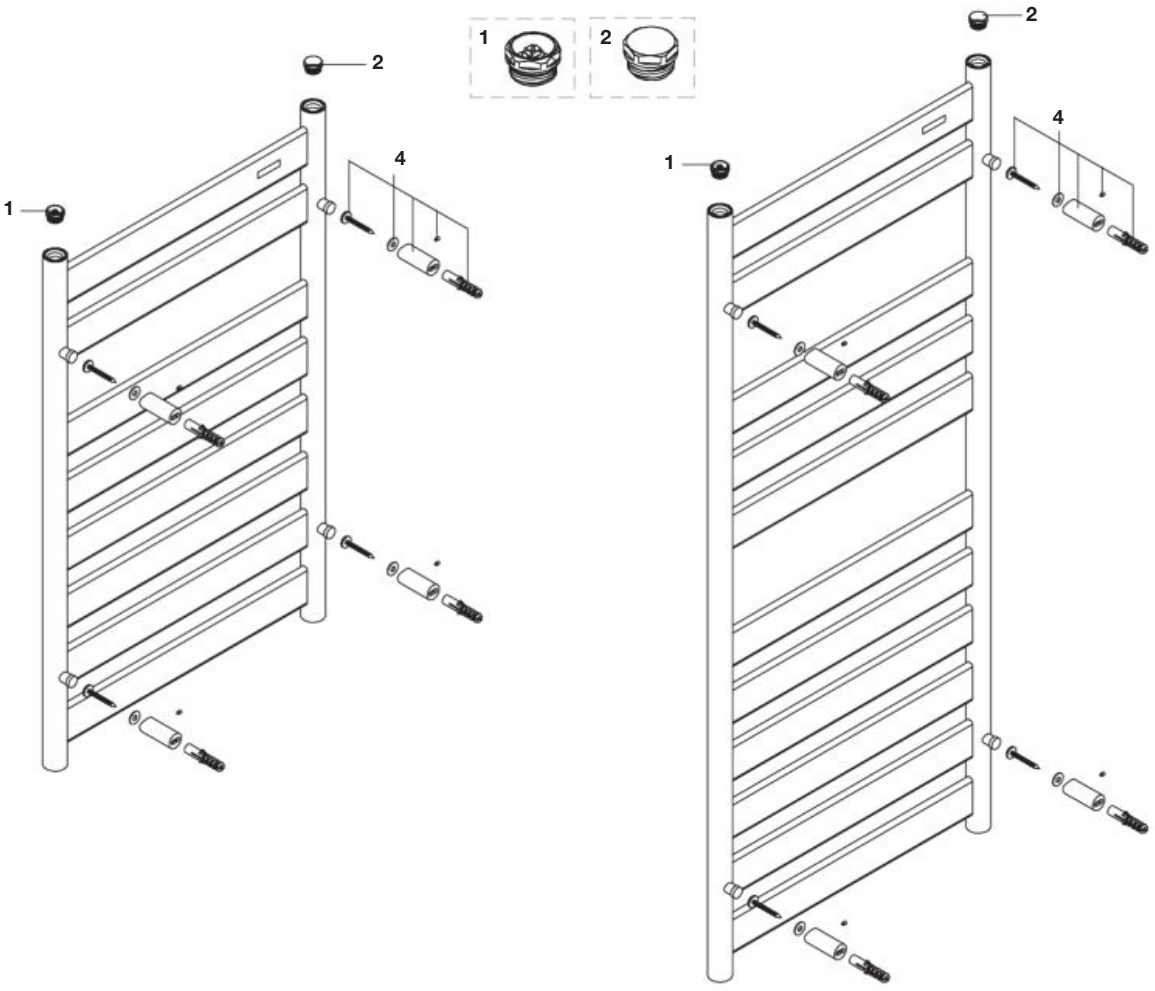

				€
1				
2	2 un	**AA0006100R**		19,00
4	4 un	**AA00062B0R**	Blanco / White	42,00
		AA0006300R	Cromado / Chrome	42,00

Rubik

Recambios comunes / Common spare parts

A816840...

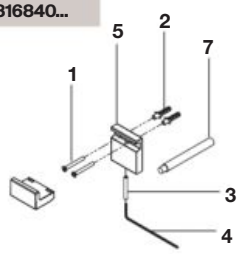

A816842...

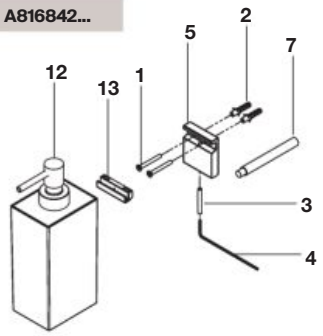

A816843...

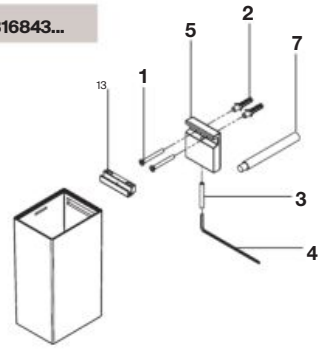

A816846...	400 mm
A816845...	600 mm

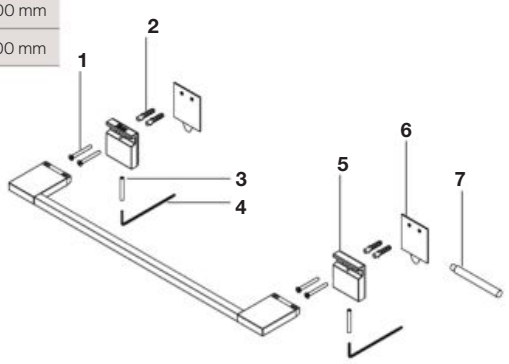

A816847...

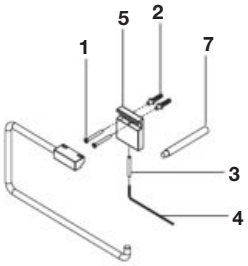

A816853...

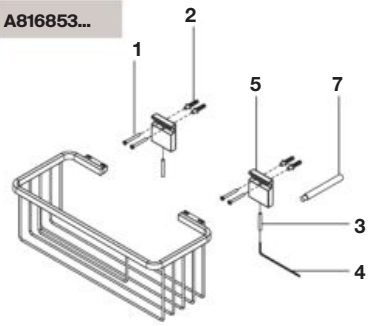

A816854...

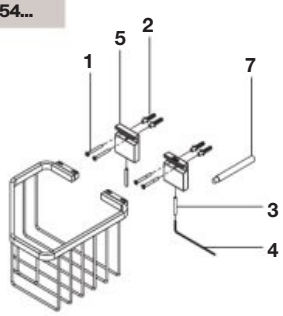

A816848...

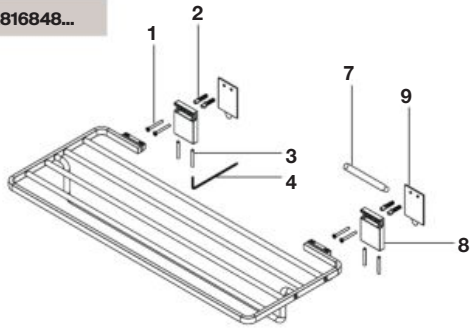

A816849...

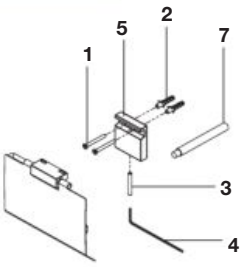

A816850...

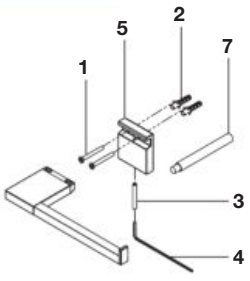

A816851...

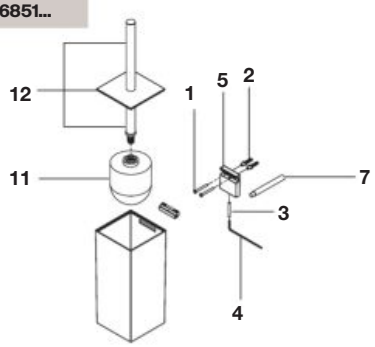

Las últimas posiciones de cada código indican el acabado (color):
The last positions indicates the finish (colour):

Producto	**Recambio**	**Acabado**
Product	Spare part	Finished
001	**00R**	Cromado / Chrome
024	**NBR**	Negro mate / Matt black

			€
1	2 un		
2	2 un	**AA0001600R**	4,73
3	2 un		
4			
1	2 un		
2	2 un	**AA0002300R**	18,50
3	2 un	**AA00023NBR**	9,30
4	2 un		
8			

			€
1	2 un		
2	2 un	**AA0016800R**	15,60
3		**AA00168NBR**	8,37
4			
5			
6		**AA0001700R**	18,50
7			
7		**AA0001800R**	15,70
9	2 un		

		€
10	**AA0002000R**	32,50
11	**AA00020NBR**	13,40
11	**AA0001900R**	3,32
12	**AA0002100R**	16,20
13	**AA0013400R**	3,78
	AA00134NBR	3,32

Record

Recambios específicos / Specific spare parts

A817660001

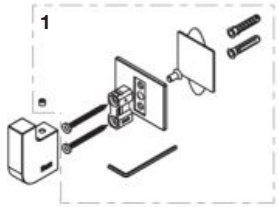

A817661001

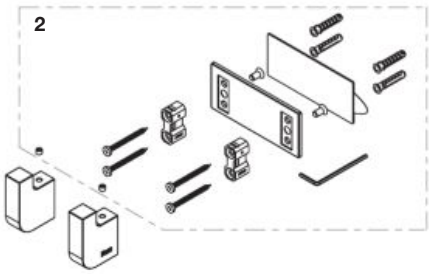

A817662001

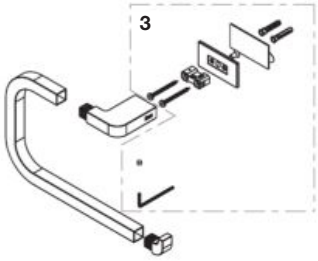

A817663001	300 mm
A817664001	400 mm

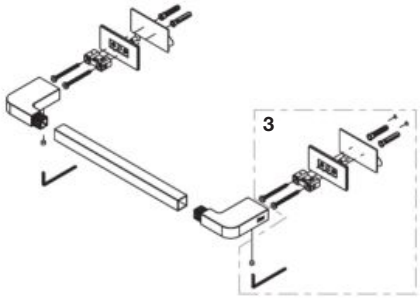

A817665001

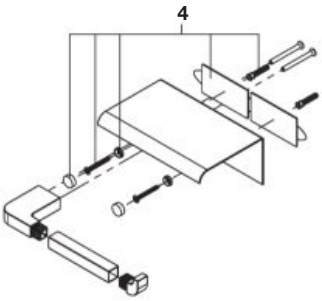

A817666001

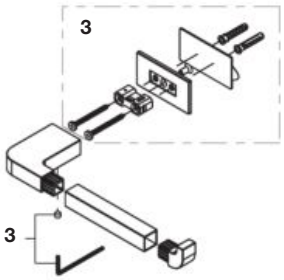

A817667001

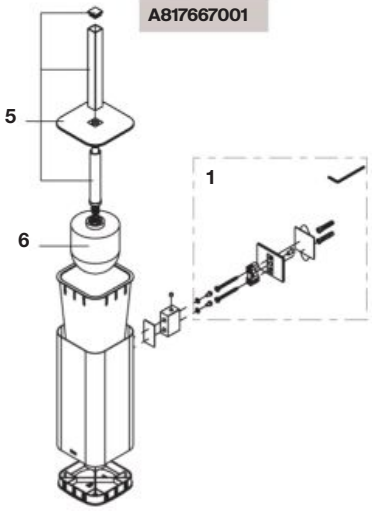

		€
1	**AA0014800R**	13,40
2	**AA0016600R**	21,50
3	**AA0016500R**	12,70
4	**AA0016300R**	17,50
5	**AA0014700R**	40,80
6	**AA0001900R**	3,32

Victoria

Accesorios de baño / Bathroom accessory

SQUARE		ROUND	
A817882...	300 mm	**A817741...**	300 mm
A817883...	400 mm	**A817742...**	400 mm
A817884...	600 mm	**A817743...**	600 mm

A817880... Square **A817740...** Round

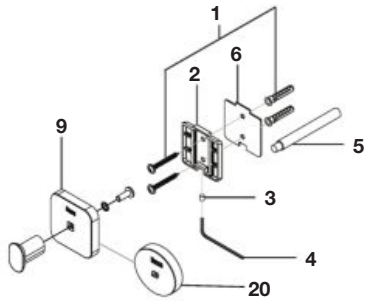

A817881.. Square

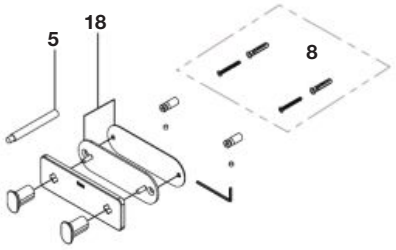

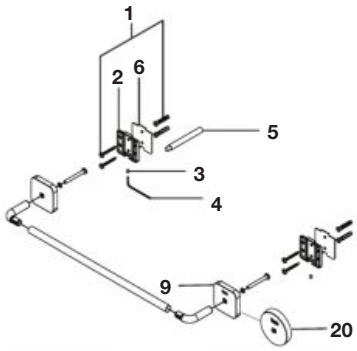

A817885.. Square

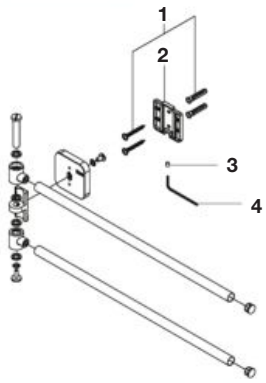

A817886... Square **A817744...** Round

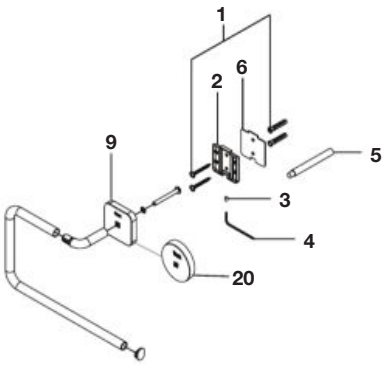

A817887... Square **A817745...** Round

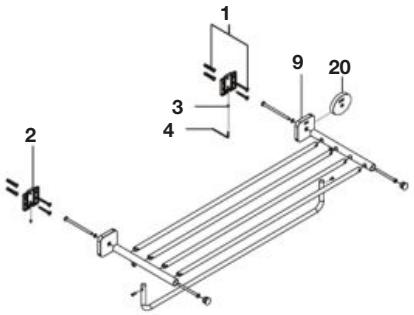

A817888... Square **A817746..** Round

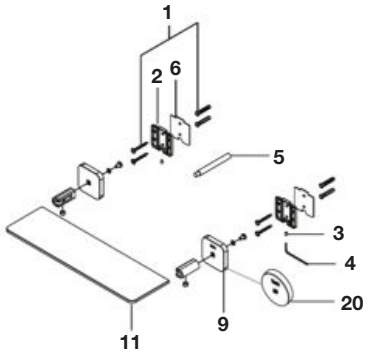

A817889..

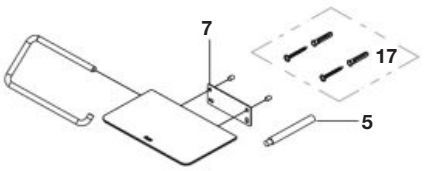

A817890... Square **A817747...** Round

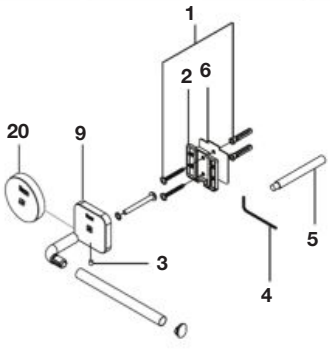

Las últimas posiciones de cada código indican el acabado (color):
The last positions indicates the finish (colour):

Producto	Recambio	Acabado
Product	Spare part	Finished
C00	00R	Cromado / Chrome
NB0	NBR	Negro mate / Matt black

			€
1	2 un	**A840797000**	3,02
2			
3			
4			
5		**A840804000**	12,20
6			
5		**AA0022300R**	13,20
7			
8		**A840737000**	5,23

			€
3		**AA0022800R**	10,20
4			
9			
3		**AA00228NBR**	10,40
4			
9			
11		**AA0022400R**	19,20
12		**AA0020300R**	15,30

			€
13		**AA0022500R**	14,50
		AA00225NBR	8,92
14		**AA0020400R**	15,60
15		**AA0022600R**	17,00
		AA00226NBR	17,00
17		**AA0022900R**	5,53
5		**AA0022300R**	13,20
18			

			€
19		**AA0007900R**	7,97
		AA00079NBR	9,37
3		**AA0023300R**	4,58
4			
20			
3		**AA00233NBR**	4,58
4			
20			

Victoria

Accesorios de baño / Bathroom accessory

A817891..

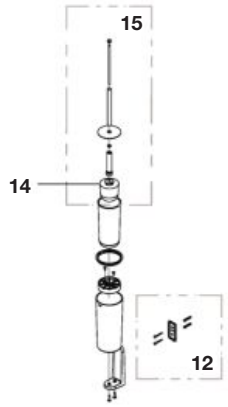

A817892..

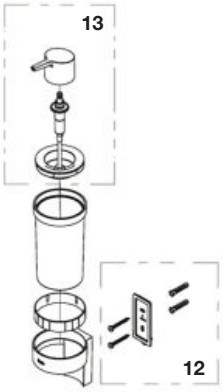

A817893..

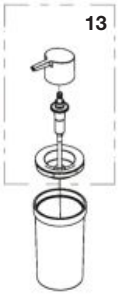

A817894..

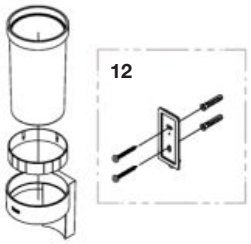

A817896.. Square

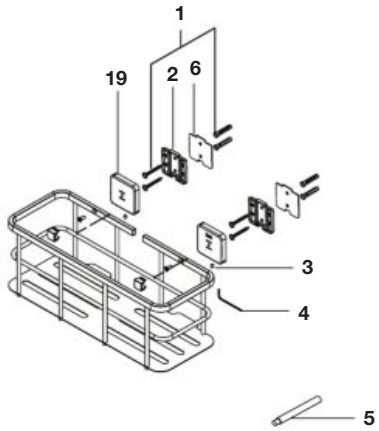

A817897.. Square

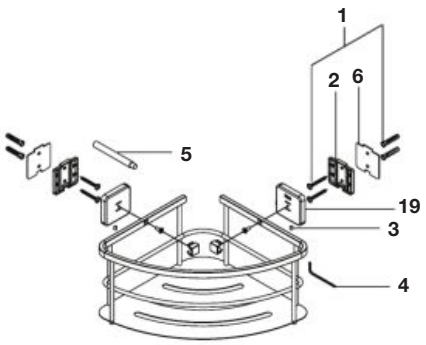

Las últimas posiciones de cada código indican el acabado (color):
The last positions indicates the finish (colour):

Producto Product	**Recambio** Spare part	**Acabado** Finished
C00	**00R**	Cromado / Chrome
NB0	**NBR**	Negro mate / Matt black

		€/un
1 2 un	**A840797000**	3,02
2		
3		
4		
5	**A840804000**	12,20
6		
5	**AA0022300R**	13,20
7		

		€/un
8	**A840737000**	5,23
3	**AA0022800R**	10,20
4		
9		
3	**AA00228NBR**	10,40
4		
9		
11	**AA0022400R**	19,20

		€/un
12	**AA0020300R**	15,30
13	**AA0022500R**	14,50
	AA00225NBR	8,92
14	**AA0020400R**	15,60
15	**AA0022600R**	17,00
	AA00226NBR	17,00
17	**AA0022900R**	5,53

		€/un
5	**AA0022300R**	13,20
18		
19	**AA0007900R**	7,97
	AA00079NBR	9,37

Victoria

Toalleros eléctricos / Heated towel rails

TOALLERO ELÉCTRICO 300W White electric towel holder 300W		
A815498000	800 x 500 mm	Blanco / White
A815498001	800 x 500 mm	Cromado / Chrome

TOALLERO ELÉCTRICO 500W White electric towel holder 500W		
A815499000	1200 x 500 mm	Blanco / White
A815499001	1200 x 500 mm	Cromado / Chrome

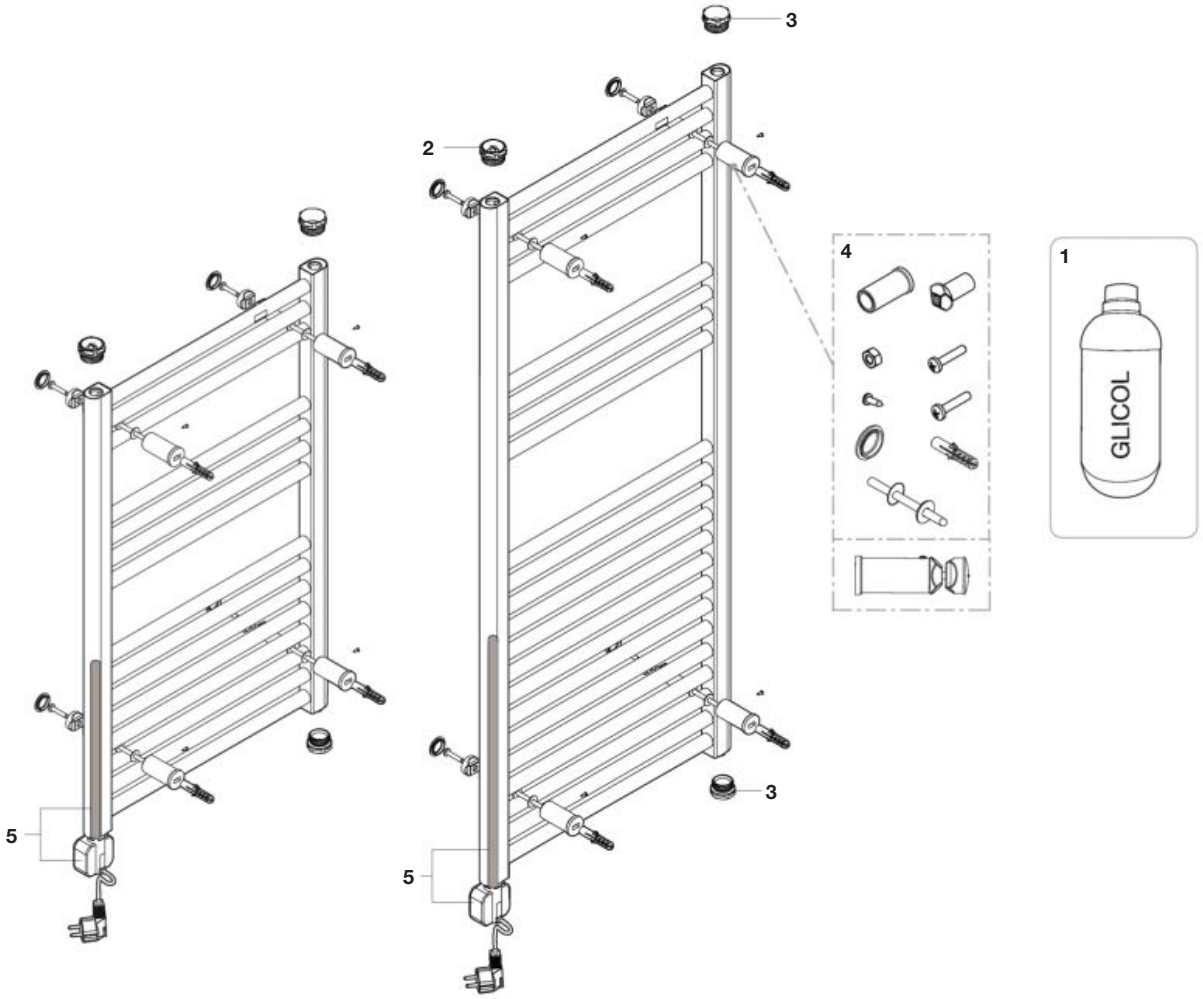

					€
1		**AR84068700**			34,30
2		**AA0006100R**			19,00
3	2 un				
4		**AA00059B0R**	300 W	Blanco / White	42,00
		AA0006000R		Cromado / Chrome	45,30
5		**AA00055B0R**	500 W	Blanco / White	170,00
		AA0005700R		Cromado / Chrome	164,00
		AA00056B0R		Blanco / White	164,00
		AA0005800R		Cromado / Chrome	170,00

Victoria (old)

Accesorios de baño / Bathroom accessory

A816650001

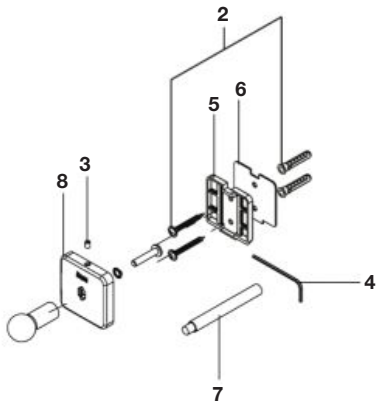

A816652001

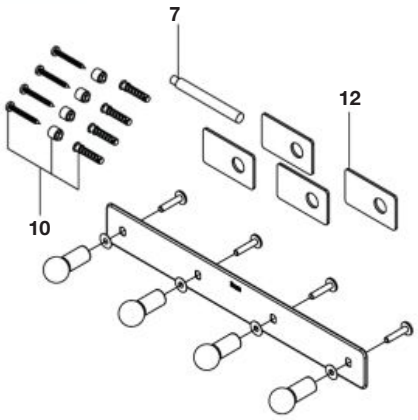

A816651001

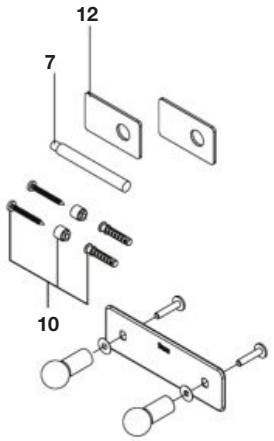

A816653001	300 mm
A816654001	400 mm
A816655001	500 mm
A816656001	600 mm
A816657001	800 mm

A816658001

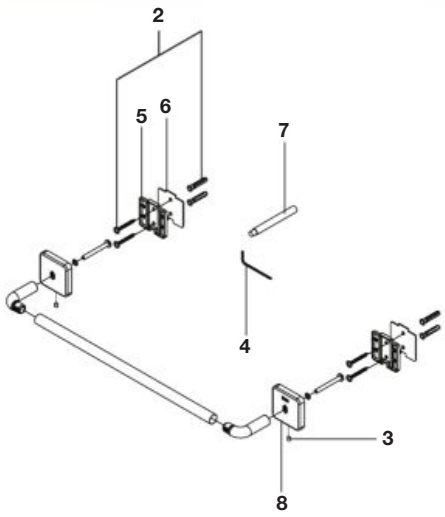

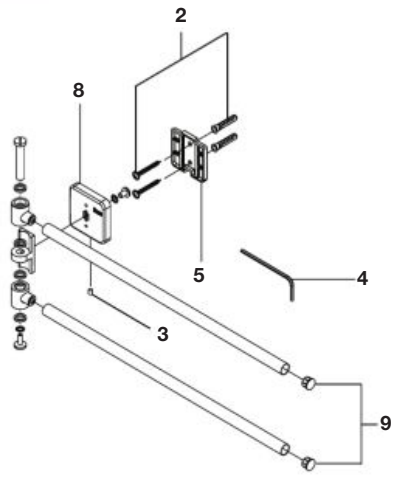

A816659001

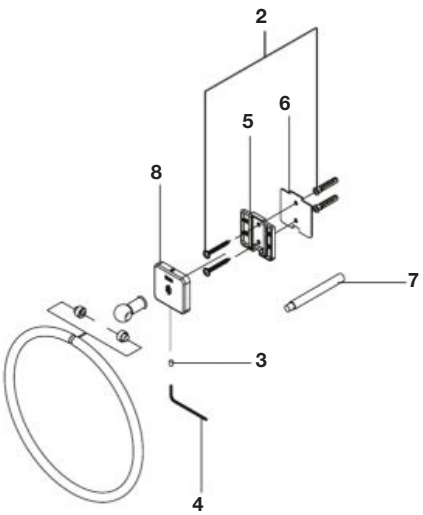

			€
1	1 un	**A840762000**	6,70
2	2 un	**A840797000**	3,02
3	1 un		
4	1 un		
5	1 un		
6	1 un	**A840804000**	12,20
7	1 un		

			€
3	1 un	**A840805001**	7,82
4	1 un		
8	1 un		
9	2 un	**AA0003900R**	2,27
10	2 un	**AA0000800R**	2,22
11	1 un	**AA0002100R**	16,20

			€
7	1 un	**AA0001300R**	14,00
12	1 un		
13	1 un	**A840802000**	32,50
14	1 un	**A840807000**	12,20
15	1 un	**A840799000**	5,30

Victoria (Old)

Accesorios de baño / Bathroom accessory

A81666001

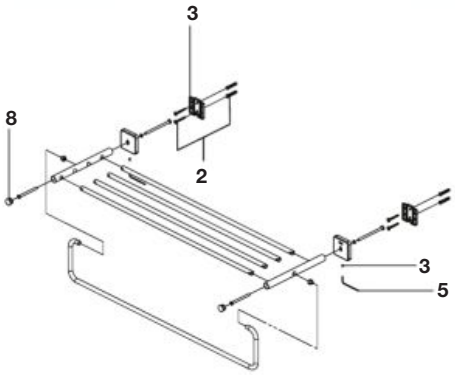

A816661001

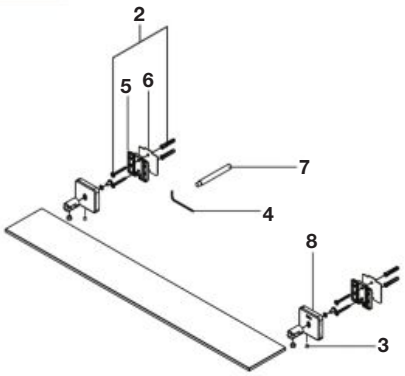

A816662001

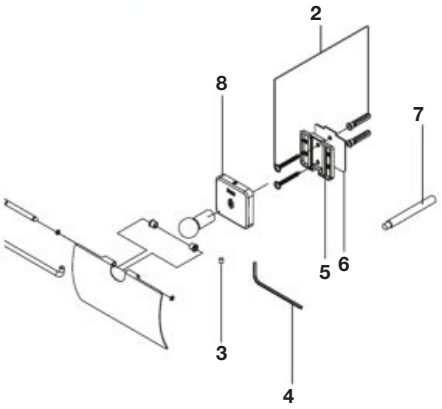

A816663001

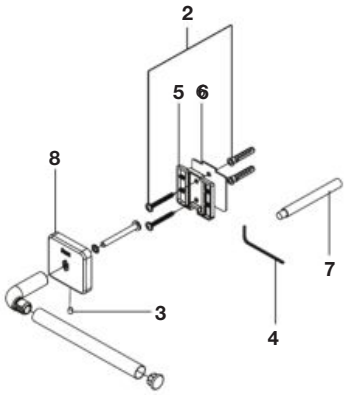

A816665001

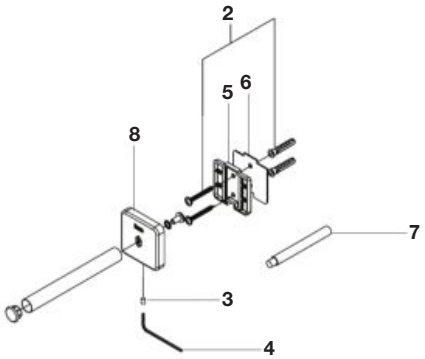

A816666001

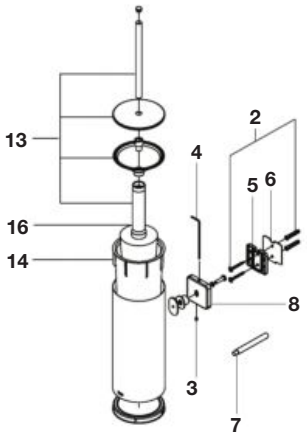

A816667001

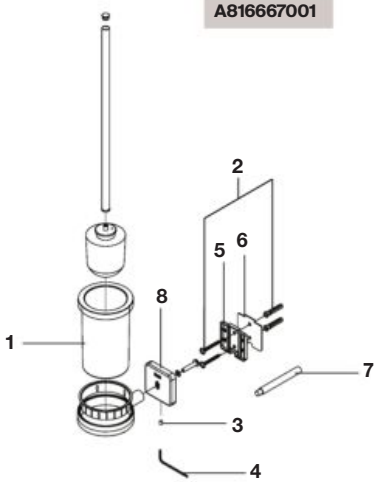

			€
1	1 un	**A840762000**	6,70
2	2 un	**A840797000**	3,02
3	1 un		
4	1 un		
5	1 un		
6	1 un	**A840804000**	12,20
7	1 un		

			€
3	1 un	**A840805001**	7,82
4	1 un		
8	1 un		
9	2 un	**AA0003900R**	2,27
10	2 un	**AA0000800R**	2,22
11	1 un	**AA0002100R**	16,20

			€
7	1 un	**AA0001300R**	14,00
12	1 un		
13	1 un	**A840802000**	32,50
14	1 un	**A840807000**	12,20
15	1 un	**A840799000**	5,30
16	1 un	**AA0000900R**	4,72

Victoria (Old)

Accesorios de baño / Bathroom accessory

A816668001

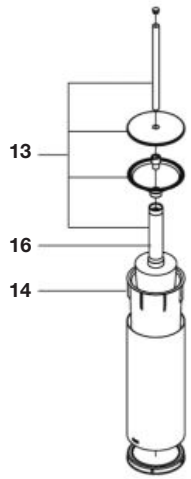

A816677001

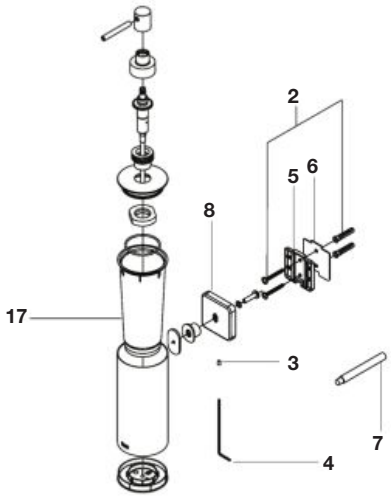

A816678001

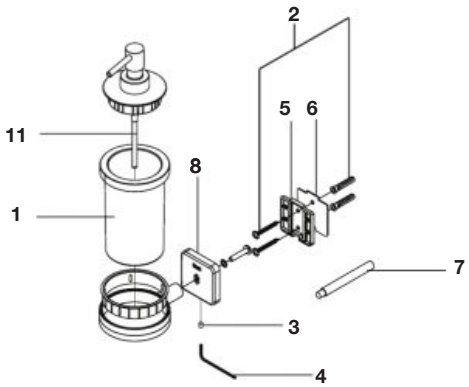

A816679001

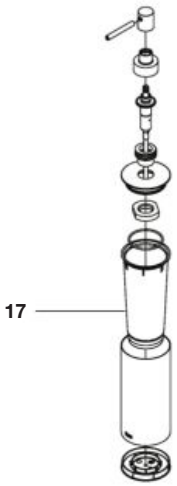

A816681001

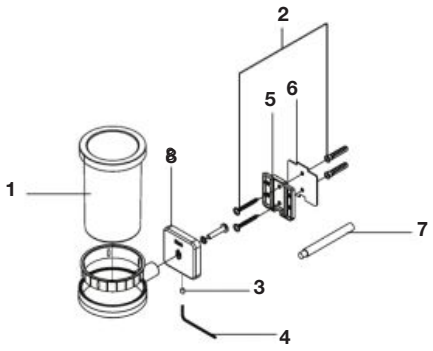

A816683001

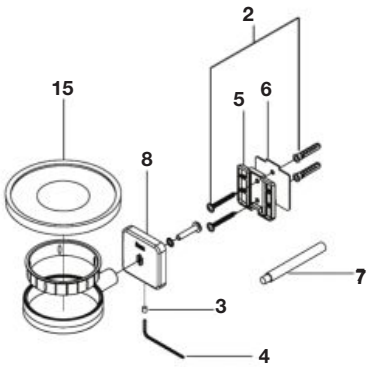

			€
1	1 un	**A840762000**	6,70
2	2 un	**A840797000**	3,02
3	1 un		
4	1 un		
5	1 un		
6	1 un	**A840804000**	12,20
7	1 un		

			€
3	1 un	**A840805001**	7,82
4	1 un		
8	1 un		
9	2 un	**AA0003900R**	2,27
10	2 un	**AA0000800R**	2,22
11	1 un	**AA0002100R**	16,20

			€
7	1 un	**AA0001300R**	14,00
12	1 un		
13	1 un	**A840802000**	32,50
14	1 un	**A840807000**	12,20
15	1 un	**A840799000**	5,30
16	1 un	**AA0000900R**	4,72

Victoria (Old)

Accesorios de baño / Bathroom accessory

A816687001	200 mm
A816688001	300 mm

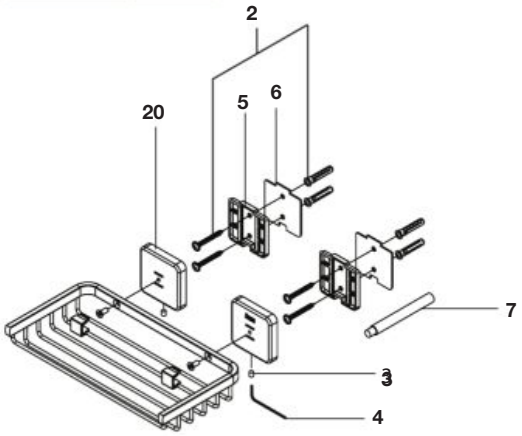

A816696..0

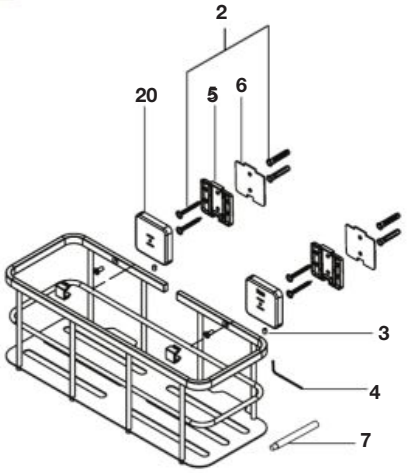

A816697..0

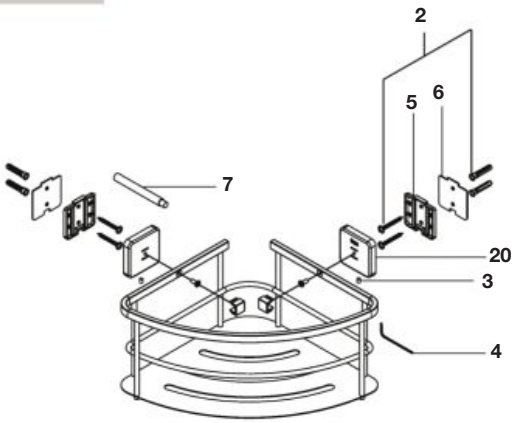

A816685001	200 mm
A816686001	250 mm

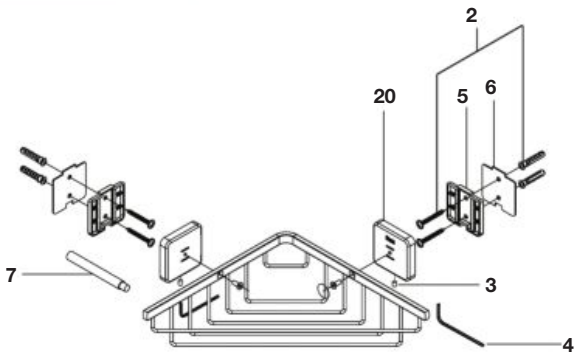

Las últimas posiciones de cada código indican el acabado (color):
The lasts positions indicates the finish (colour):

Producto	**Recambio**	**Acabado**
Product	Spare part	Finished
C00	**00**	Cromado / Chrome
NB	**MB**	Negro mate / Matt Black

			€
1	1 un	**A840762000**	6,70
2	2 un	**A840797000**	3,02
3	1 un		
4	1 un		
5	1 un		
6	1 un	**A840804000**	12,20
7	1 un		

			€
3	1 un	**A840805001**	7,82
4	1 un		
8	1 un		
9	2 un	**AA0003900R**	2,27
10	2 un	**AA0000800R**	2,22
11	1 un	**AA0002100R**	16,20
7	1 un	**AA0001300R**	14,00
12	1 un		

			€
13	1 un	**A840802000**	32,50
14	1 un	**A840807000**	12,20
15	1 un	**A840799000**	5,30
16	1 un	**AA0000900R**	4,72
17	1 un	**A840806000**	12,20
18	1 un	**A840763000**	3,73
19	1 un	**A840764001**	18,70
20	1 un	**AA0007900R**	7,97

Victoria (Old)

Toallero hidráulico Victoria / Hydraulic towel rail Victoria

A815504000	Blanco / White	800x500mm
A815504001	Cromado / Chrome	
A815505000	Blanco / White	1200X500mm
A815505001	Cromado / Chrome	

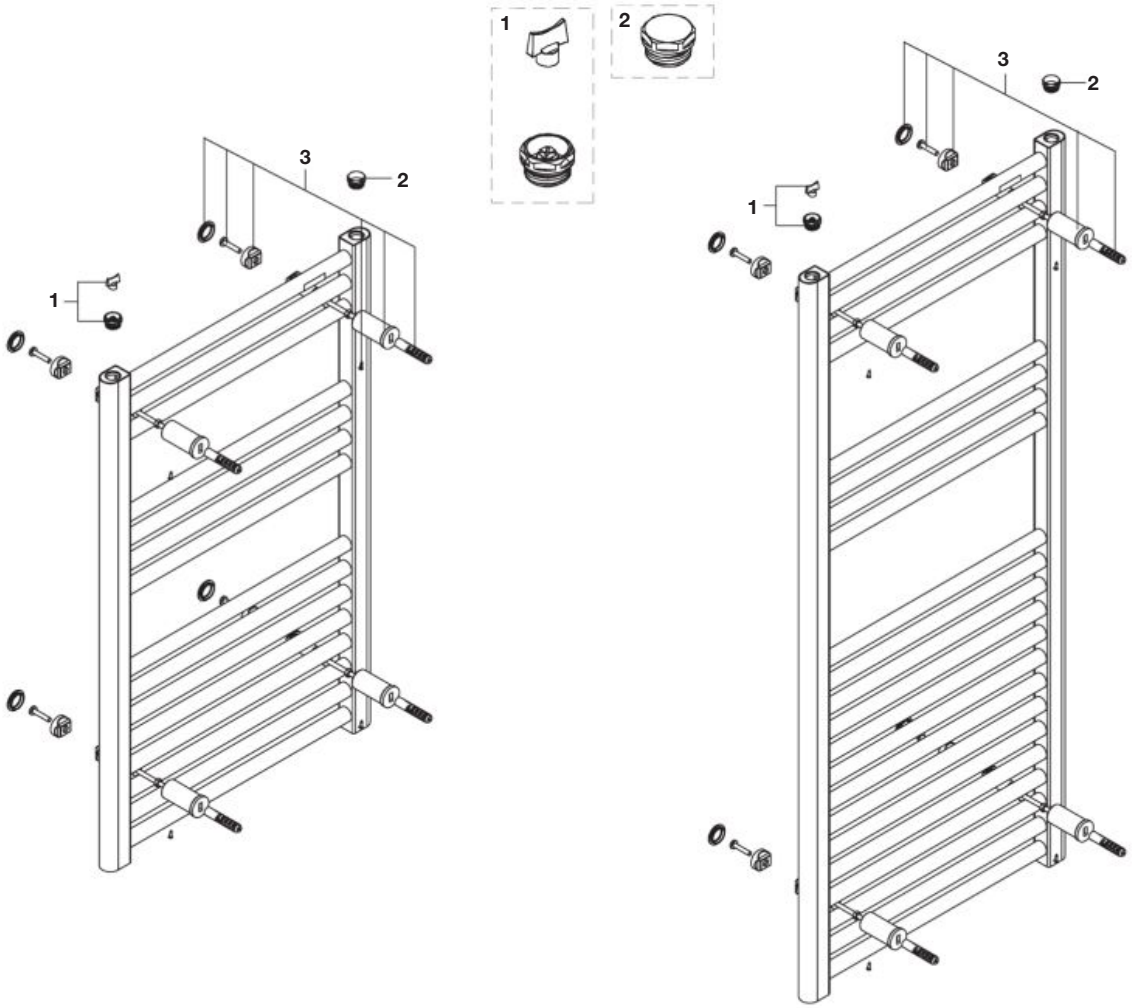

				€
1				
2	2 un	**AA0006100R**		19,00
3	4 un	**AA00059B0R**	Blanco / White	42,00
		AA0006000R	Cromado / Chrome	45,30

Sonata

Accesorios de baño / Bathroom accessory

A817720...

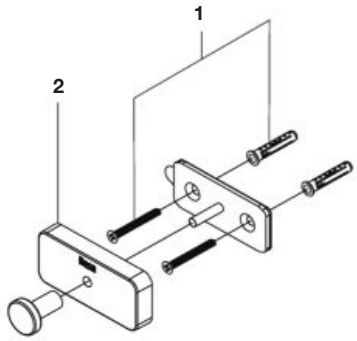

A817721...

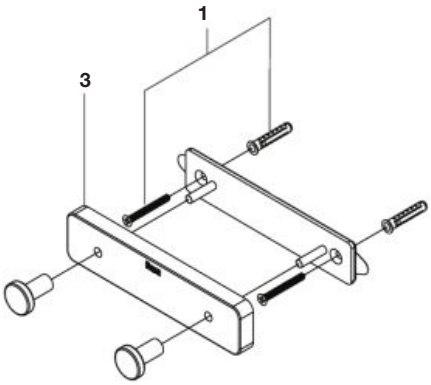

A817728...

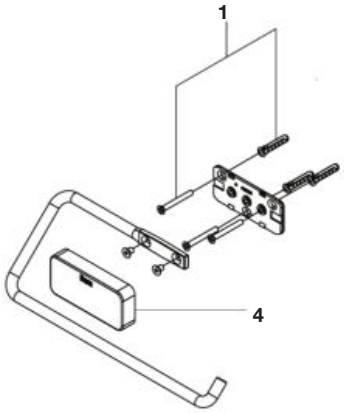

A817731...

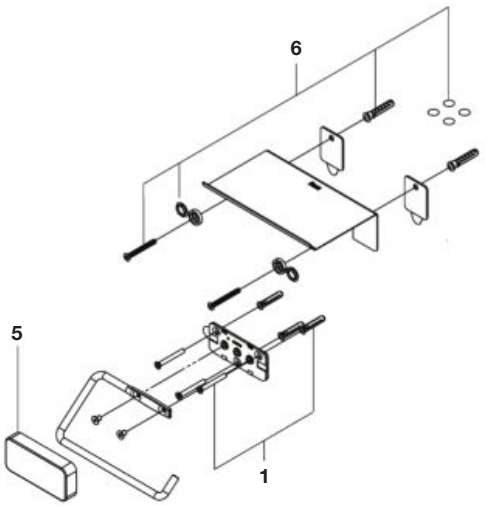

A817732...

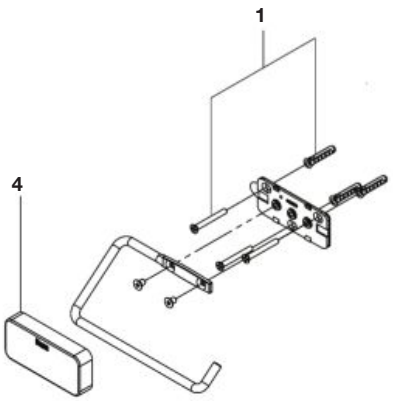

A817733...

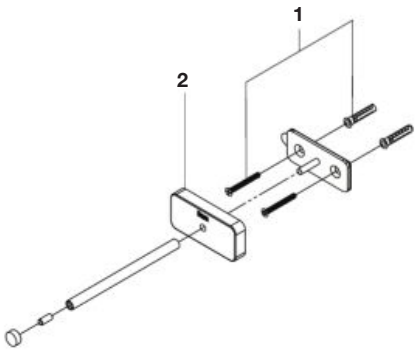

Las últimas posiciones de cada código indican el acabado (color):
The lasts positions indicates the finish (colour):

Producto Product	**Recambio** Spare part	**Acabado** Finished
C00	**CH**	Cromado / Chrome
NB	**MB**	Negro mate / Matt Black

			€
1	3 un	**AA0019500R**	10,40
2		**AA00196CHR**	5,53
		AA00196MBR	3,88
3		**AA00197CHR**	6,38
		AA00197MBR	4,92
4		**AA00198CHR**	5,50
		AA00198MBR	3,68

			€
5		**AA00199CHR**	5,23
		AA00199MBR	3,22
6	2 un	**AA0020000R**	11,10
7		**AA00201CHR**	5,92
		AA00201MBR	6,53
8		**AA00202CHR**	60,00
		AA00202MBR	63,30

		€
9	**AA0020300R**	15,30
10	**AA0020400R**	15,60
11	**AA00205CHR**	7,78
	AA00205MBR	4,10
12	**AA00206CHR**	59,50
	AA00206MBR	60,50

Sonata

Accesorios de baño / Bathroom accessory

A817727...

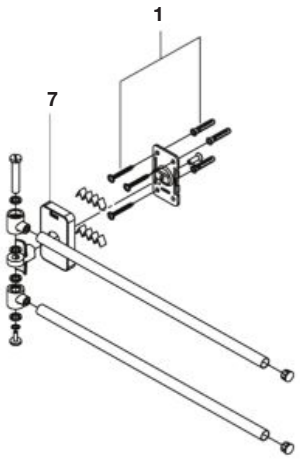

A817729...

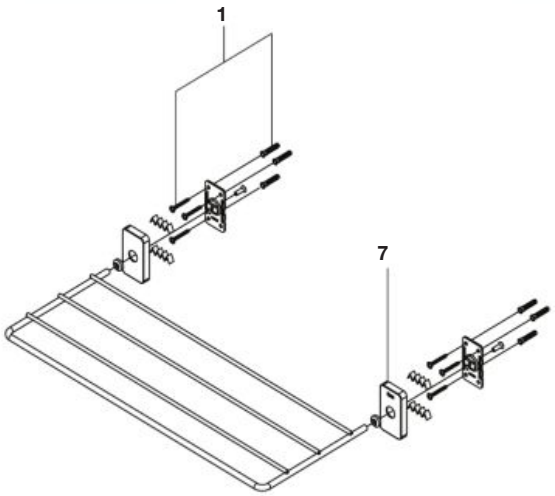

A817734...

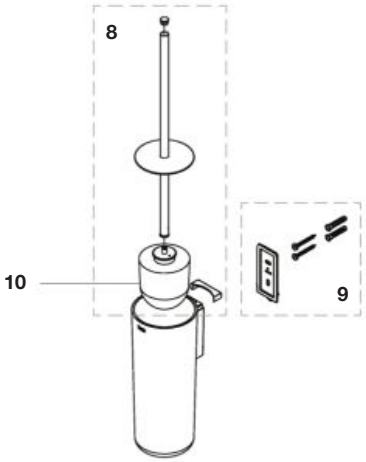

A817723...	300 mm
A817724...	400 mm
A817726...	600 mm

A817735...

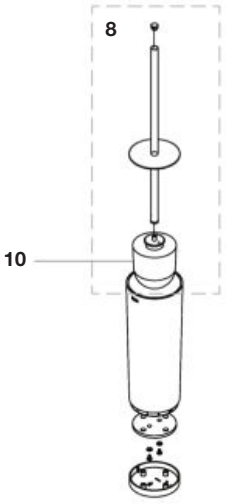

A817736...

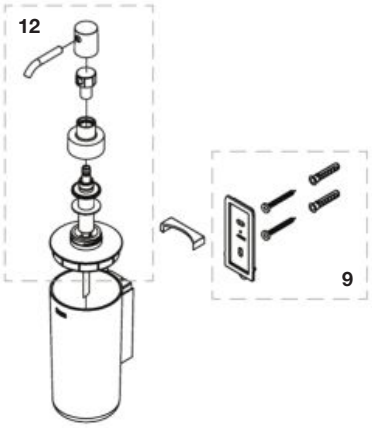

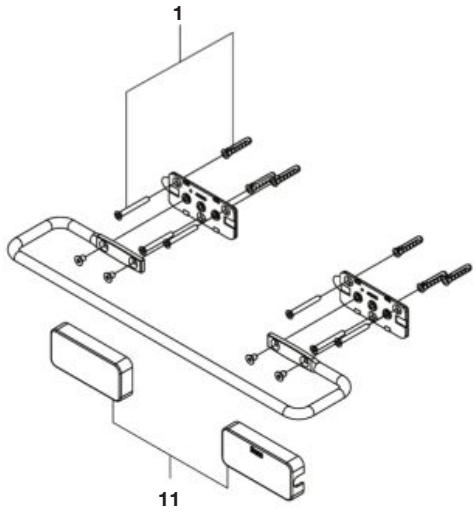

A817738...



Las últimas posiciones de cada código indican el acabado (color):
The lasts positions indicates the finish (colour):

Producto Product	**Recambio** Spare part	**Acabado** Finished
C00	**CH**	Cromado / Chrome
NB	**MB**	Negro mate / Matt Black

			€
1	3 un	**AA0019500R**	10,40
2		**AA00196CHR**	5,53
		AA00196MBR	3,88
3		**AA00197CHR**	6,38
		AA00197MBR	4,92
4		**AA00198CHR**	5,50
		AA00198MBR	3,68

			€
5		**AA00199CHR**	5,23
		AA00199MBR	3,22
6	2 un	**AA0020000R**	11,10
7		**AA00201CHR**	5,92
		AA00201MBR	6,53
8		**AA00202CHR**	60,00
		AA00202MBR	63,30

		€
9	**AA0020300R**	15,30
10	**AA0020400R**	15,60
11	**AA00205CHR**	7,78
	AA00205MBR	4,10
12	**AA00206CHR**	59,50
	AA00206MBR	60,50

Compas

Accesorios de baño / Bathroom accessory

A817720C00

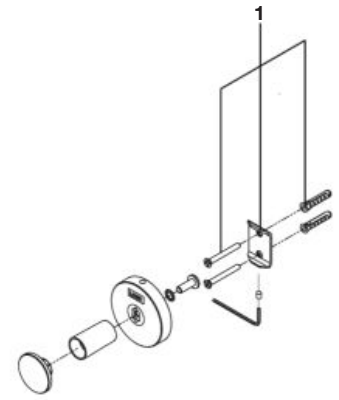

A817720C00

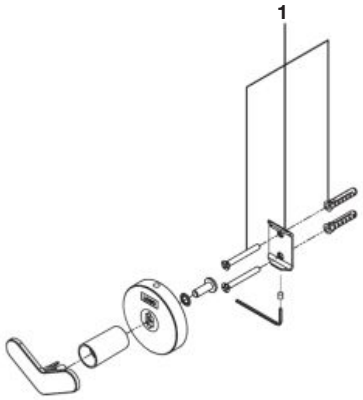

A817720C00

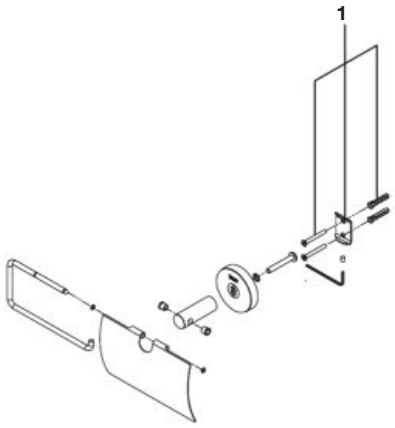

A817723C00	300 mm
A817724C00	400 mm
A817726C00	600 mm

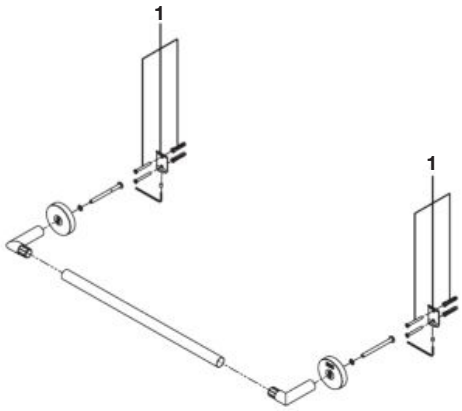

A817720C00

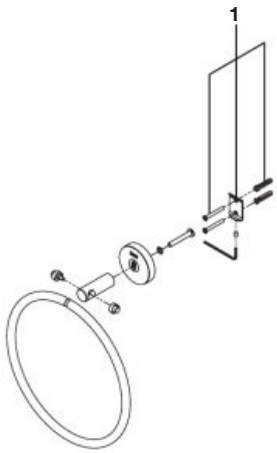

A817720C00

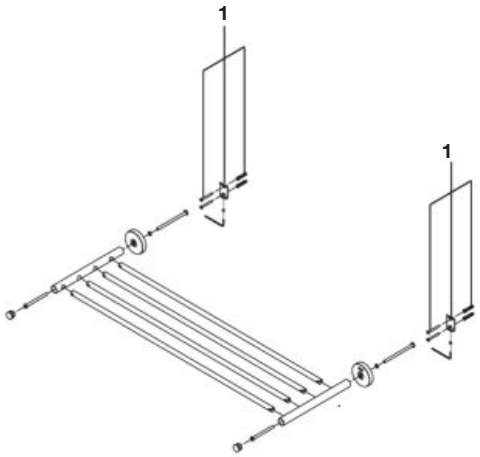

			€
1		**AA0013300R**	2,22
2		**A840763000**	3,73
3		**A840764001**	18,70
4		**A840790001**	9,33
5		**A840762000**	6,70
6	2 un	**A840798000**	8,20
7		**A840799000**	5,30

Compas

Accesorios de baño / Bathroom accessory

A817720C00

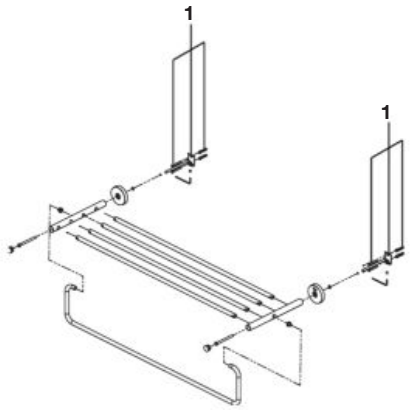

A817720C00

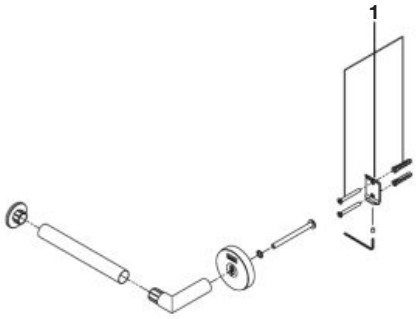

A817720C00

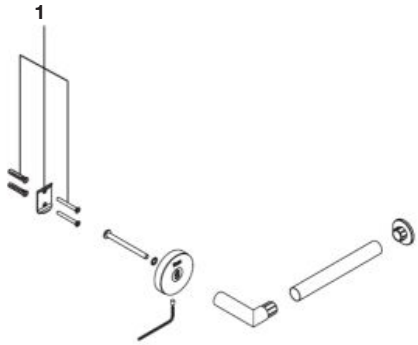

A817720C00

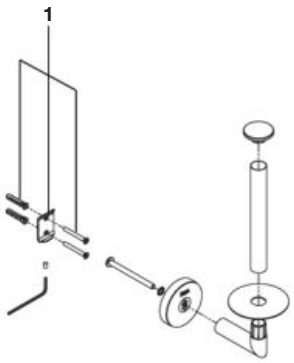

A817720C00

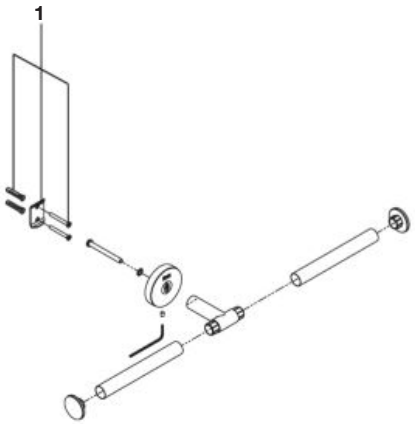

A817720C00

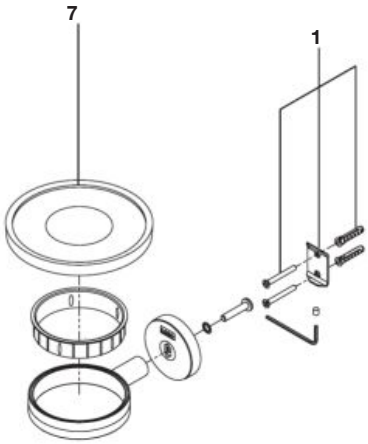

			€
1		**AA0013300R**	2,22
2		**A840763000**	3,73
3		**A840764001**	18,70
4		**A840790001**	9,33
5		**A840762000**	6,70
6	2 un	**A840798000**	8,20
7		**A840799000**	5,30

Compas

Accesorios de baño / Bathroom accessory

A817689C00

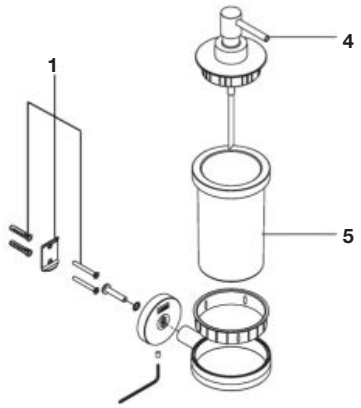

A817690C00

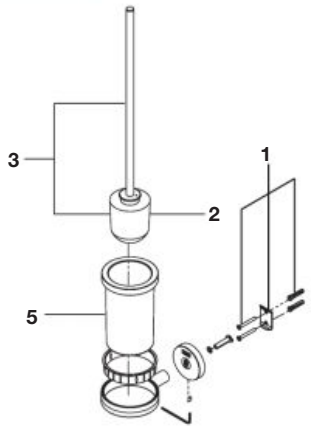

A817691C00

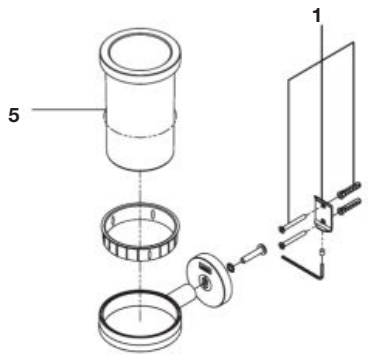

A817692C00

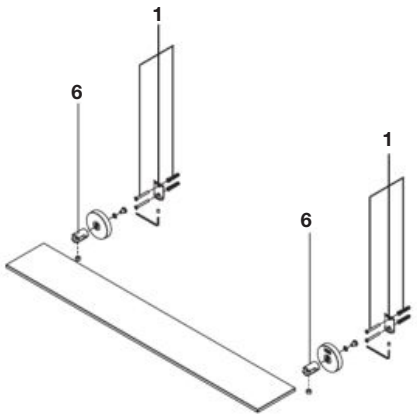

A817693C00

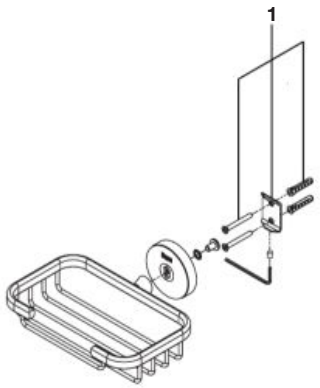

A817694C00

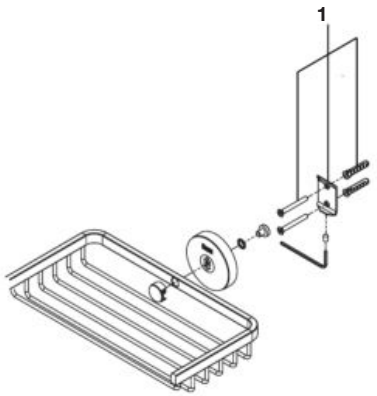

A817695C00	200x200 mm
A817697C00	250x250 mm

A817696C00

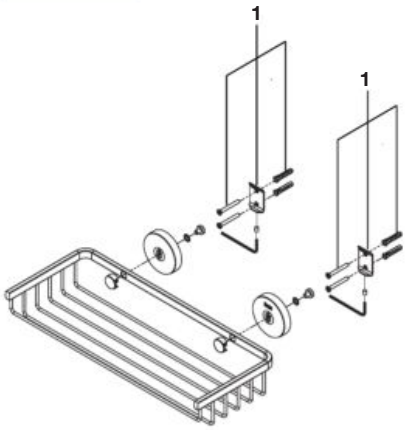

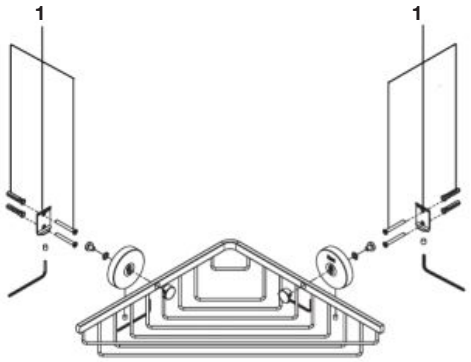

			€
1		**AA0013300R**	2,22
2		**A840763000**	3,73
3		**A840764001**	18,70
4		**A840790001**	9,33
5		**A840762000**	6,70
6	2 un	**A840798000**	8,20
7		**A840799000**	5,30

Otros accesorios de metal / Other metallic accesories

Hotel's

		€
A840221000	**Soport anclaje serie hotel's /** Anchor bracket serie hotel's	6,70
A840306031	**Rec. Palo+escob neg hotel's /** Hotel's brush chrome metal	30,80
A840329000	**Vaso hotel's /** Vaso hotel's	4,52
A840352000	**Vaso escobillero /** Toilet brush holder paris	10,40
A840360000	**Cristal repisa hotel's /** Glass shelf hotel's	40,70
A840544001	**Roseton nvo. Crom-brill hot /** Rossette nvo. Chrome-bright hot	2,85
A840708000	**Accesorio sujeción toallero /** Hotels towel rail fxg kit	3,90
A840709001	**Rec. Palo+escob bla hotel's /** Hotel's brush chrome	30,20
A840710000	**Cepillo escobill ngr hotel's /** Repl wc brush head	8,42
A848056000	**Juego fijacion hotel's /** Juego fijacion hotel's	1,35
AA0003100R	**Kit fijación portatoallas doble Hotel's /** Kit fixing double towel holder hotels	47,20
AV0006700R	**Rec tapa urinario hall cr blanc /** Rep urinary hall cover cr white	55,00

Hotel's 2.0

		€
A840703000	**Cepilo escobillero /** Select brush only	9,48
A840727000	**Acc fij complemetos pared hotels /** Wall mounting acces. acces.hotels 2.0	5,23
A840728000	**Repisa estante 600mm hotels 2.0 /** Shelf 600mm hotels 2.0	15,70
A840730000	**Accesorio fijacion toallero hotels 2.0 /** Accessory fixation toallero hotels 2.0	5,23
A840731000	**Accesorio fij toallero giratorio hotels /** Accessory fij toallero giratorio hotels	15,70
A840732000	**Bombilla gx53 9w espejo c/luz hotels /** 9w gx53 bulb mirror w / **light hotels**	65,70
A840733000	**Recambio espejo,espejo con luz hotels /** Replac. mirror, mirror with light hotels	31,50
A840735001	**Mango escobillero hotels 2.0 Cr brillo /** Mango hotel's brush 2.0 cr shine	42,20
A840736000	**Accesorio fijacion asa abatible hotels /** Accessory fixation asa abatible hotels	15,70
A840737000	**Accesorio fijacion rejillas hotels /** Accessory fixation rejillas hotels	5,23
A840739000	**Accesorio fij eje central asas hotels /** Acces. fix central shaft handles hotels	5,23
AA0003800R	**Kit fijación espejo aumento hotels 2.0 /** Kit fixing mirror's hotel 2.0 increase	13,10
AA0004000R	**Kit soporte pared asa hotels 2.0 (2 un) /** Kit wall sup. handgrip hotels 2.0 (2u)	7,45
AA0011400R	**Kit pulsador y bomba disp hotels 2.0 /** Kit push-button & disp pump hotels 2.0	20,00

Fashion

		€
A840577000	**Cristal jabonera Fashion /** Soap holder glass fashion	15,30
A840582001	**Escobilla+palo Fashion crom brill /** Toilet brush+stick fashion crom brill	29,00
AA0002400R	**Kit bomba dosificador jabón Fashion /** Kit soap dispenser valve fashion	10,70
A840605001	**Soporte embell. Fashion bril /** Fashion ornamental mounting, polished	7,45
A840741000	**Tapones colgador Fashion /** Fashion caps colgador	2,62
A840578000	**Vaso cristal Fashion esc./Portav. /** Glass crystal fashion	21,20

Play

		€
A840579009	**Vaso pared play blanco /** Play wall-hung tumbler white	7,25
A840580009	**Jabonera pared play blanco /** Soap holder glass play white	6,70
A840594009	**Escobilla play blanco /** Toilet brush play white	30,50
A84058000N	**Jabonera pared play orange /** Soap holder glass play orange	6,70
A84059400N	**Escobilla play orange /** Toilet brush play orange	30,50
A84057900N	**Vaso pared play orange /** Play wall-hung tumbler orange	7,25

People

		€
A840678001	**Crist repisa people 400 blan /** Glass shelf people 600 whte	21,70
A840679001	**Crist repisa people 600 blan /** Glass shelf people 600 whte	31,30

Veranda

			€
A840424000	**Cepillo escobilla / Spare brush for accessories**	Veranda, Monaco, Conica, Fashion, Silver	8,58
A840476000	**Tulipa aplique veranda / Lighting cover veranda**		22,30

Otros accesorios de metal / Other metallic accesories

Nuova

		€
A840756000	Soporte anclaje a pared portapapel sin tapa / Support wall fixing roll w/o cover	2,15
A840759000	Soporte cristal / Kit glass support nuova	6,87
A840762000	Vaso cristal / Spare glass nuova/victoria	6,70
A840763000	Cepillo escobilla / Kit spare brush nuova/vict	3,73
A840764001	Mango escobilla / Brush handle kit cr + brush nuo / vi	18,70
A840765000	Juego de fijación colgador/contendedores / Set of fix. hanger/containers	0,62
A840766000	Juego de fijación complementos / Set of fix. accessories	0,85
A840768000	Juego bis sujección estante / Kit hinge faste shelf vict/nuo	2,60
A840769000	Juego fijación portapapel sin tapa / Atachment set paper holder without lid	0,53
A840770000	Recambio bomba dosificador / Spare pump soap dispenser nuo/vic	1,27
A840771000	Soporte anclaje a pared toalleros / Kit fix sup towel rail wall nuova	2,18

Twin

		€
A840763000	Cepillo escobilla / Kit spare brush nuova/vict	3,73
A840764001	Mango escobilla / Brush handle kit cr + brush nuo / vi	18,70
A840770000	Recambio bomba dosificador / Spare pump soap dispenser nuo/vic	1,27
A840781000	Cristal jabonera / Kit soap dish glass twin	7,05
A840782000	Vaso de cristal / Kit glass twin	8,28
A840783000	Cristal repisa 600mm / Kit glass shelf 600mm twin/vict	9,13
A840784001	Rosetón cromado / Kit rosette chrome twin	7,63
A840785000	Soporte anclaje a pared / Kit support anchorage to wall twin	3,77
A840786000	Adhesivo / Kit round adhesive twin	15,20
A840787001	Soporte cristal (escobillero, dosificador, vaso) / Kit ring support glass twin	13,60
A840788000	Juego de fijación / Kit ring support glass twin	1,43

Select

		€
A840703000	Cepillo escobillero Select / Select brush only	9,48
AA0002700R	Kit eje portarrollos Select / Rec shaft wc roll holder select s/lid	13,20
A840704000	Mango escobillero Select / Toilet brush handle select	33,20
A840770000	Recambio bomba dosificador / Spare pump soap dispenser nuo/vic	1,27
A840706000	Suj.Pa perc/toal/port. Select / Select wc roll holder fxgs	4,70

Otras series / Other series

		€
A285046001	Toallero mueble f novara cr / Towel rail mueble f novara chrome	155,00
A526803421	Anilla t. Anilla cromo mate / Towel ring towel ring chrome opaque	34,20
A527000810	Jgo tornillos fijac accesor / Set fix. screws accessory	1,68
A527002810	Juego soportes fijacion / Set support fix.	5,13
A543368307	Torica 11,11x1,78 / O-ring 11.11x1.78	0,10
A840098000	Vaso portaescobil polivalent / Versatile toilet brush holder	11,90
A840286000	Arandela poliamida / Nylon washers	0,10
A840415000	Cristal repisa veranda / Shelf glass veranda	47,80
A840416000	Cristal repis-portav veranda / Shelf glass-cup holder veranda	49,70
A840428001	Varilla portarrollo cromo / Toilet paper holder rod chrome	21,50
A840770000	Kit bomba dosificador nuo/vic / Spare pump soap dispenser nuo/vic	1,27
A848084000	Fijac pared jab.Esp/portav p / Fix.wall soap holder mirror/cup holder p	1,88
AA0013200R	Kit tornillería para fijación accesorios / Kit screw set fixtion accesories	1,72
AA0013300R	Juego fijación Cubica / Kit fixing set cubica	2,22
AA0013400R	Juego fijación Rubik / Kit bracket accesories rubik	3,78
AA0002100R	Kit dispensador A816678 / Kit dispenser soap a816678	16,20

Superinox mate / Matt superinox

Recambios específicos / Specific spare parts

MODELOS DE PRODUCTO ACABADO /
Finished products models

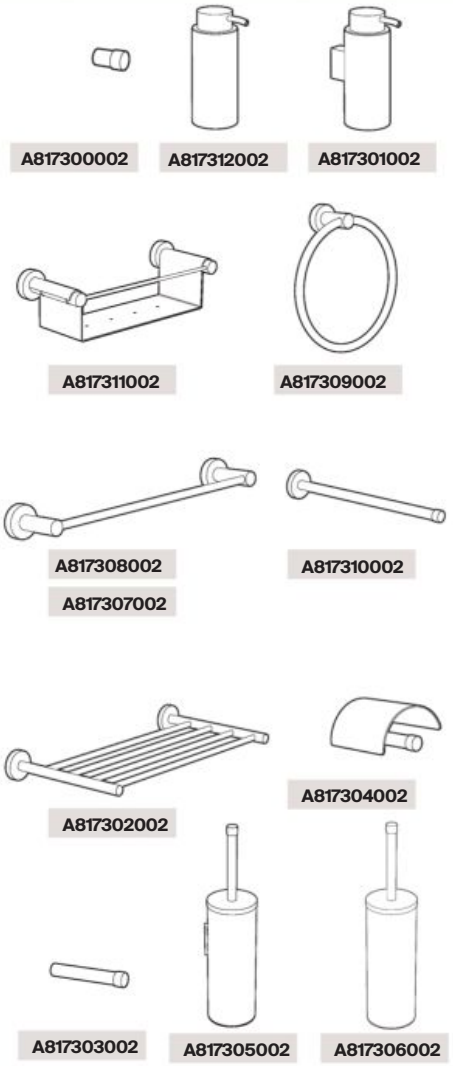

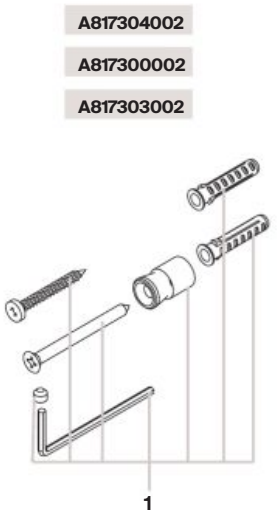

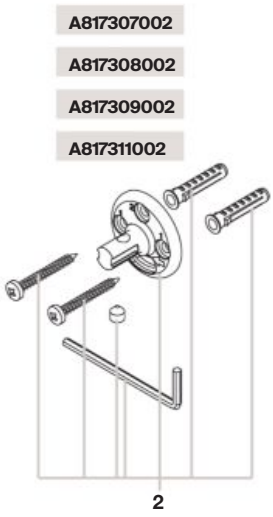

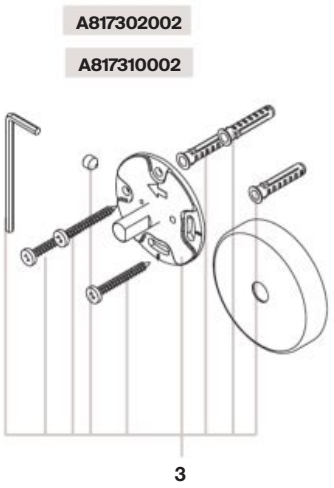

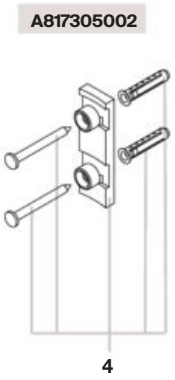

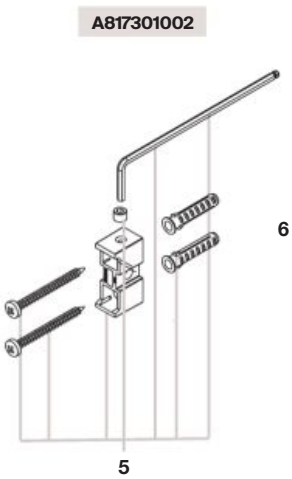

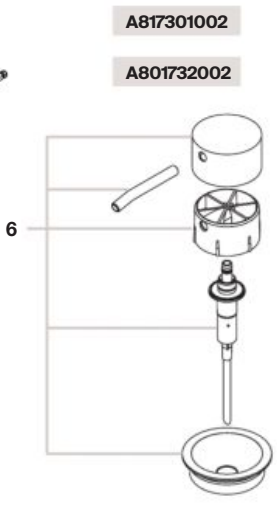

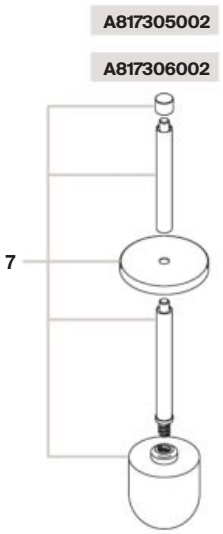

		€
1	**AA0008000R**	1,88
2	**AA0008100R**	6,30
3	**AA0008200R**	11,30
4	**AA0008300R**	1,43
5	**AA0008400R**	2,25
6	**AA0008500R**	11,20
7	**AA0008600R**	14,60

Otros accesorios de acero inoxidable / Other stainless steel accesories

Superinox

		€
A840264000	Vaso escob superinox/chic/ar / Spare glass for chic/aria toilet brush	18,80
A840304000	Cepillo escob superinox/pres / Spare brush for toilet brush	7,35
A840354000	Cristal repisa superinox / Glass shelf superinox	21,20
A840355000	Cristal jabonera superinox / Soap holder glass superinox	21,80
A840356000	Frasco dosificador superinox / Superinox dosing flask	12,60

		€
A840745001	Rec cto palo+escob. Br superinox / Cto parts stick + brush br superinox	32,30
A840745002	Rec cto palo+escob. Ma superinox / Cto parts stick + brush ma superinox	19,70
A848081000	Juego fijacion superinox / Superinox fixing set	8,12

Accesorios de porcelana / Porcelain accesories

City

		€
A848079001	**Escobilla+palo cr onda pl/ city/paris /** Toilet brush city/paris chrome	15,10
A848079002	**Escobilla city cromo mate /** Toilet brush city chrome opaque	17,50
A848091000	**Juego fijacion city /** Set fix. city	1,68
A848092000	**Jgo.Fijacion accesorios city /** Set fix. accessories city	1,23

Frontalis

		€
A822027100	**Juego de fijación /** Frontalis accessories fixtures	7,13
A840616001	**Anill crom portarr frontalis /** Toilet paper holder ring crh frontalis	30,80

Paris

		€
A840352000	**Vaso escobillero paris /** Toilet brush holder paris	10,40
A848074000	**Fij par ani/lav/per/ptv pari /** Fix.wall ring/bs/ hanger/cup holder paris	1,62
A848075000	**Fij. Pared jab/portaes paris /** Fix. wall soap dish/ shelf holder paris	1,98
A848079001	**Escobilla+palo cr onda pl/ city/paris /** Toilet brush city/paris chrome	15,10
A848079005	**Escobilla paris dorado /** Toilet brush paris gold	22,20
AA0000000R	**Kit anilla toallero paris /** Kit ring paris	27,80

Onda Plus

		€
A848064000	**Jgo torn fij acces onda plus /** Fxg set ts onda + t/r/holder	1,10
A848079001	**Escobilla+palo cr onda pl/ city/paris /** Toilet brush city/paris chrome	15,10
AA0000200R	**Kit soporte fijación onda plus /** Kit fixing support onda plus	5,33
AA0013800R	**Kit fijación rail toallero pequeño Onda Plus /** Kit fix. l sup. sh. towel rail onda plus	15,90

Doa

		€
A840098000	**Vaso escobillero /** Versatile toilet brush holder	11,90
A848112000	**Fijación contenedor, toallero-contenedor Doa /** Set fix. large doa	8,02
A848113000	**Fijación percha Doa /** Set fix. small doa	3,64
A848114000	**Juego Fijación portaescobillero Doa /** Set fix. toilet brush holder doa	-
A848116000	**Juego fijación portarollo Doa /** Set fix. toilet paper holder doa	1,64
A848117000	**Fijación toallero Doa /** Set fix. towel holder	1,10

Box

		€
A840663000	**Eje portarrollo bl Box /** Stem toilet paper holder box	33,30
A840663001	**Eje portarrollo Box cromado /** Stem toilet paper holder box chrome	33,30
A848113000	**Fijación Toallero, Repisa, Percha Box /** Set fix. small doa	3,64
A848114000	**Juego Fijación portaescobillero Box /** Set fix. toilet brush holder doa	-
A848115000	**Juego fijación portarrollos Box /** Set fix. toilet paper holder box	4,36
A848117000	**Juego Fijación portarollos-escobillero Box /** Set fix. towel holder	1,10

Otras series de accesorios de porcelana / Other porcelain accesories

		€
AA0000300R	Kit eje portarrollos de plástico	3,53

New Onda

		€
AA0014000R	Kit escobilla New Onda	25,00

Ona

Dosificador de jabón / Soap dispenser

A817673...

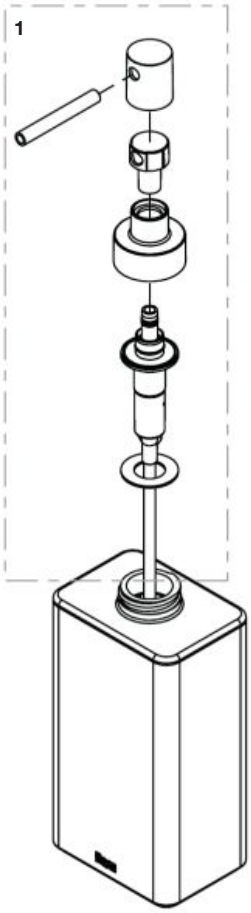

Las últimas posiciones de cada código indican el acabado (color):
The lasts positions indicates the finish (colour):
C6 **Blanco /** White
C7 **Verde /** Highland Green
C8 **Arena /** Sand

		€
1	**AA0002100R**	16,20

Rondo

Accesorios de baño / Bathroom accessory

A817791...

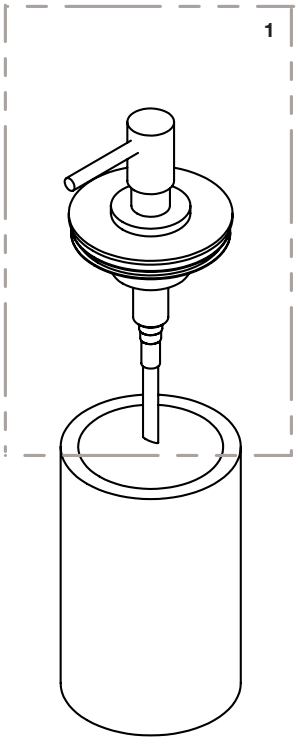

A817792..

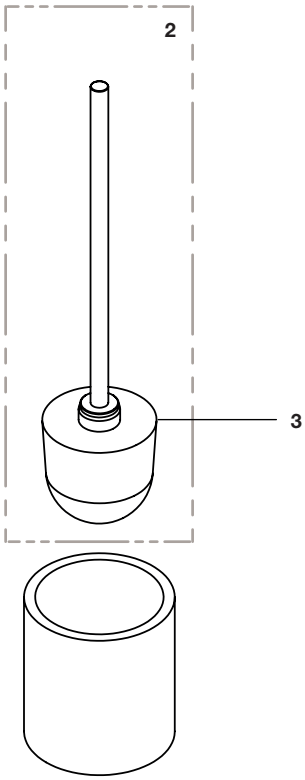

Las últimas posiciones de cada código indican el acabado (color):
The lasts positions indicates the finish (colour):
009 Blanco / White
012 Negro / Black

		€
1	**AA0020900R**	3,30
2	**AA0003012R**	2,13
3	**AA0021000R**	1,75

Ice

Recambios específicos / Specific spare parts

MODELOS DE PRODUCTO ACABADO / Finished products models



A8168600..



A8168610..



A8168630..

Las últimas posiciones de cada código indican el acabado (color):
The lasts positions indicates the finish (colour):
09 Blanco / White
12 Negro / Black

A8168610..

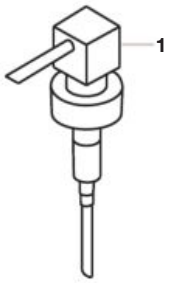

A8168630..

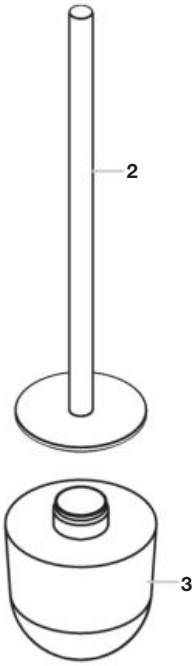

			€
1	**AA0002800R**		7,27
2-3	**AA0002912R**	Negro / Black	13,10
	AA0002909R	Blanco / White	13,10
3	**AA0003012R**	Negro / Black	2,13
	AA0003009R	Blanco / White	2,13

Extra

Accesorios de baño / Bathroom accessory

A817920..

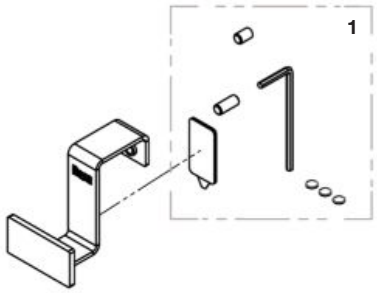

A817921..	275 mm
A817922..	385 mm

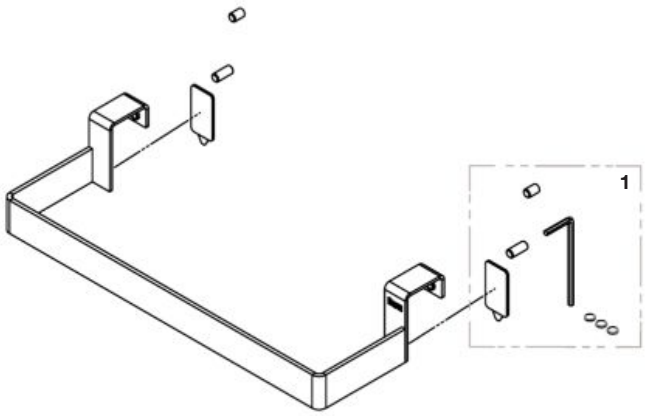

A817923..

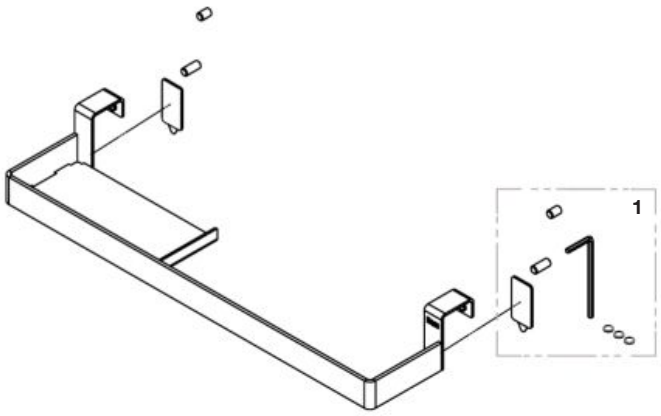

A817924..

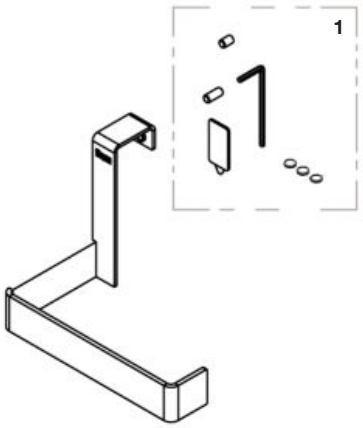

Las últimas posiciones de cada código indican el acabado (color):
The lasts positions indicates the finish (colour):
C00 **Cromado /** Chrome
NB0 **Negro Mate /** Matt Black

		€
1	**AA0023200R**	1,78

Fregaderos /
Kitchen sinks


PORTO

Quarzex®	
781	**Oslo**
782	**Riga**
783	**Bergen**
Acero inoxidable / Stainless steel	
785	**Praga & París**
786	**Praga-N: fregadero de una cubeta /** Praga-N: Kitchen sink 1 body
787	**Roma: fregadero de una cubeta /** Roma: Kitchen sink 1 body
788	**Lisboa: fregadero de una cubeta /** Lisboa: Kitchen sink 1 body
790	**Budapest**
791	**Glasgow**
792	**Victoria**
793	**BP**
794	**J-Plus**
795	**X-Tra**
796	**Berlin**
797	**Viena**
798	**Otros fregaderos de acero inoxidable** Other stainless steel sinks
Gres	
Silacryl	
801	**Gourmet, Maxims & Bermeo**
802	**Arts, Veneto & Jockey**


OSLO

Quarzex®

Oslo: Fregadero reversible de una cubeta / Oslo: Kitchen sinks 1 body

A880120..0	OSLO 85	860x500 mm
A880130..0	OSLO 100	1000x500 mm

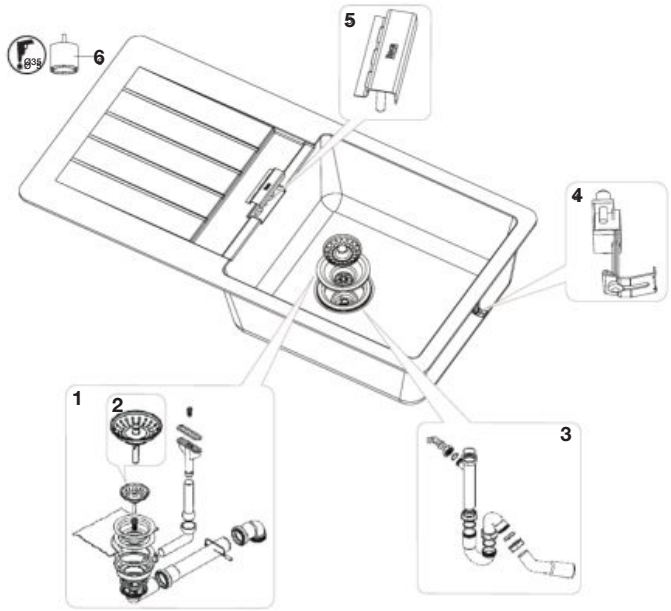

			€
1		**AF0003700R**	28,80
2		**AF0002500R**	16,80
3		**AF0002700R**	16,30
4	10 ud	**AF0003200R**	25,80
5		**AF0003300R**	22,00
6		**AF0003500R**	26,00

Las últimas posiciones de cada código, indican el acabado (color):
Last positions of each code indicate finish (color):
02 Blanco / White
94 Negro / Black
11 Gris / Grey

Oslo: Fregadero reversible de dos cubetas / Oslo: Kitchen sinks 2 bodys

A880160..0	OSLO 85 2C	860x500 mm
A880170..0	OSLO 100 2C	1000x500 mm

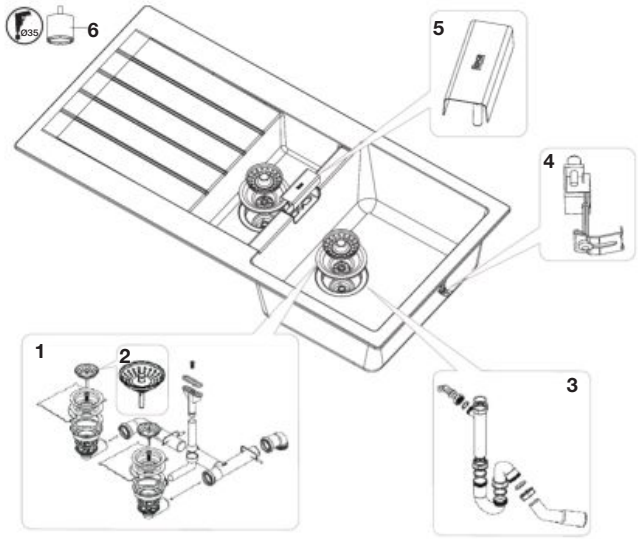

			€
2		**AF0002500R**	16,80
3		**AF0002700R**	16,30
4	10 ud	**AF0003200R**	25,80
6		**AF0003500R**	26,00
7		**AF0003600R**	32,80
8		**AF0004000R**	22,80

Las últimas posiciones de cada código, indican el acabado (color):
Last positions of each code indicate finish (color):
02 Blanco / White
94 Negro / Black
11 Gris / Grey

Quarzex®

Riga: Fregadero reversible de una cubeta /
Riga: Kitchen sinks 1 body

MODELOS DE PRODUCTO ACABADO / Finished products models



A880140..	RIGA 40
A880150..	RIGA 50

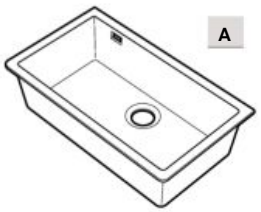

A880220..	RIGA 70

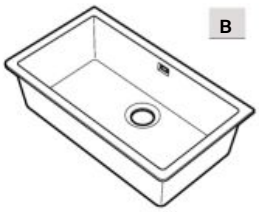

A880250..	RIGA 70

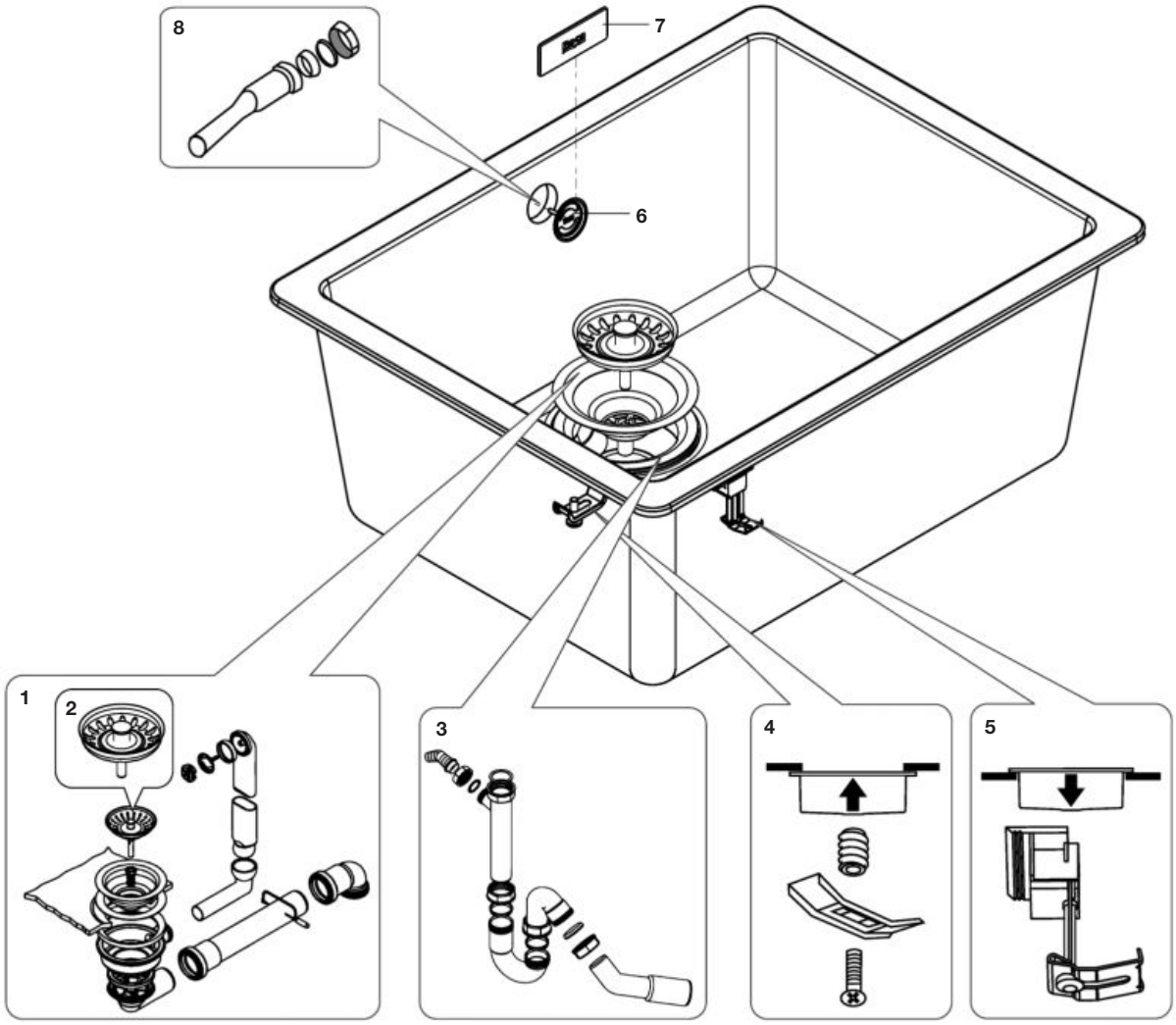

					€
1		**AF0002600R**			28,80
		AF0006800R	70	**A**	28,30
		AF0007600R	70	**B**	58,20
2		**AF0002500R**			16,80
3		**AF0002700R**			16,30
4	4 un	**AF0002800R**			38,50
	6 un	**AF0007700R**	70	**B**	31,30

					€
5	4 un	**AF0002900R**	70		38,50
	6 un	**AF0007800R**	70	**B**	25,30
6		**AF0003000R**			22,00
7		**AF0006900R**	70	**A**	22,80
		AF0007900R	70	**B**	4,85
8		**AF0007000R**			11,10

Las últimas posiciones de cada código, indican el acabado (color):
Last positions of each code indicate finish (color):
02 Blanco / White
94 Negro / Black
11 Gris / Grey

Quarzex®

Bergen: Fregadero de una cubeta / Bergen: Kitchen sinks 1 body

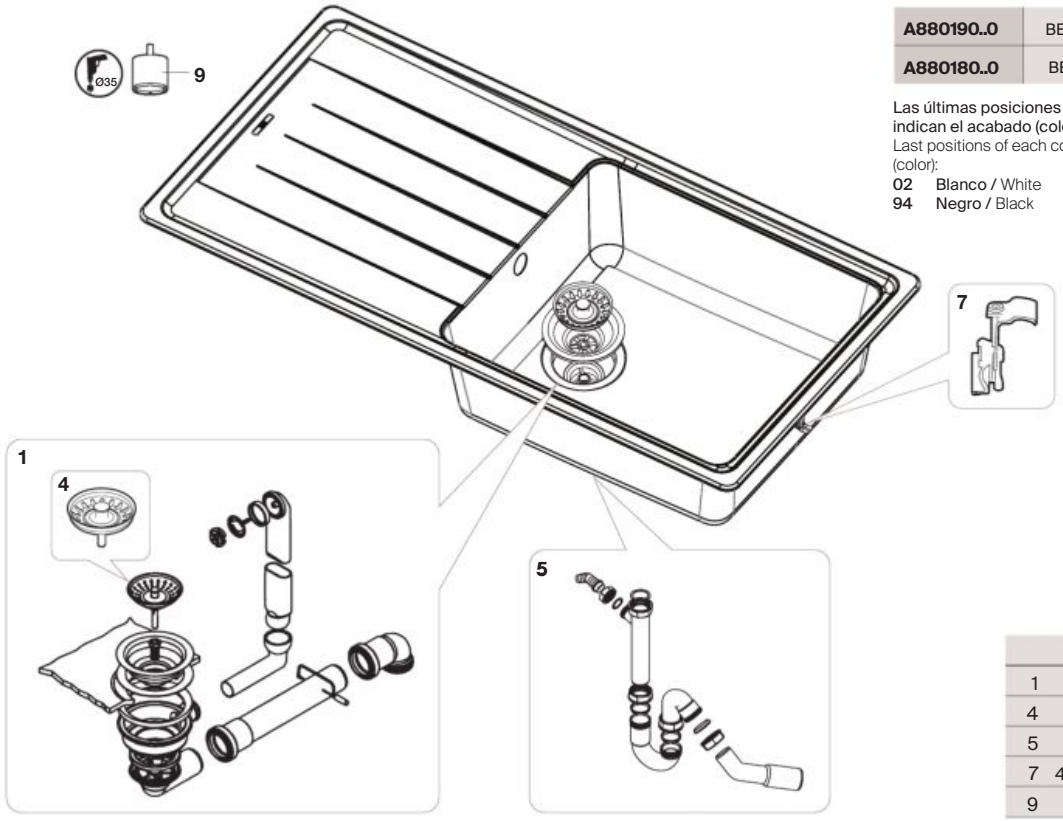

A880190..0	BERGEN 100	1000x500 mm
A880180..0	BERGEN 80	780x500 mm

Las últimas posiciones de cada código, indican el acabado (color):
Last positions of each code indicate finish (color):
02 Blanco / White
94 Negro / Black

			€
1		**AF0002600R**	28,80
4		**AF0002500R**	16,80
5		**AF0002700R**	16,30
7	4 un	**AF0002900R**	38,50
9		**AF0003500R**	26,00

Bergen: Fregadero de dos cubetas / Bergen: Kitchen sinks 2 bodys

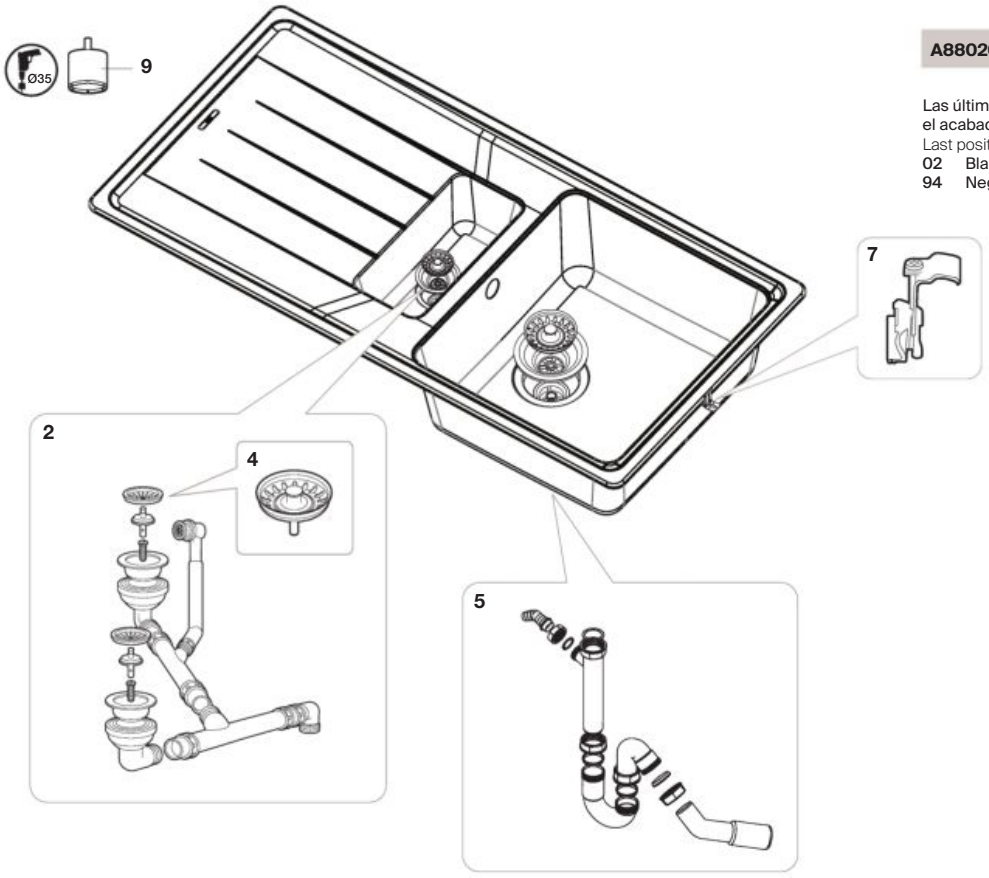

A880200..0	BERGEN 100 2C	1000x500 mm

Las últimas posiciones de cada código, indican el acabado (color):
Last positions of each code indicate finish (color):
02 Blanco / White
94 Negro / Black

			€
2		**AF0005700R**	74,50
4		**AF0002500R**	16,80
5		**AF0002700R**	16,30
7	4 un	**AF0002900R**	38,50
9		**AF0003500R**	26,00

Quarzex®

Bergen: Fregadero de dos cubetas / Bergen: Kitchen sinks 2 bodys

A880210..0	BERGEN 85 2C	800x500 mm

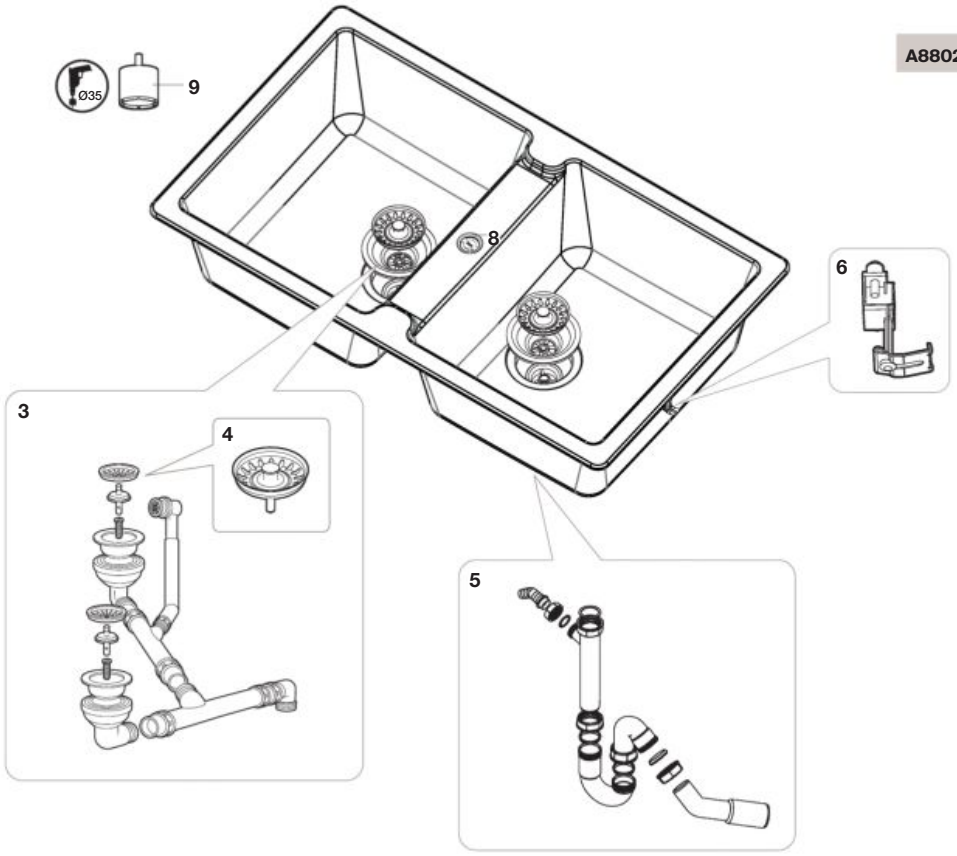

			€
3		**AF0005800R**	66,70
4		**AF0002500R**	16,80
5		**AF0002700R**	16,30
6	10 un	**AF0003200R**	25,80
8		**AF0003000R**	22,00
9		**AF0003500R**	26,00

Helsinki: Fregadero de una cubeta / Helsinki: Kitchen sinks 1 body

MODELOS DE PRODUCTO ACABADO /
Finished products models



A880230..0	HELSINKI 40
A880240..0	HELSINKI 50

			€
1		**AF0002600R**	28,80
2		**AF0002500R**	16,80
3		**AF0003000R**	22,00
4	4 un	**AF0002800R**	38,50
5	4 un	**AF0002900R**	38,50

Acero inoxidable / Stainless steel

Praga & París

MODELOS DE PRODUCTO ACABADO / Finished products models



A870E10400	PRAGA 40
A870J10400	PARIS 40



A870E10450	PRAGA 45
A870J10450	PARIS 45

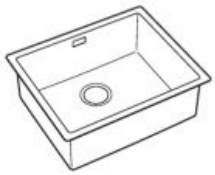

A870E10500	PRAGA 50
A870J10500	PARIS 50

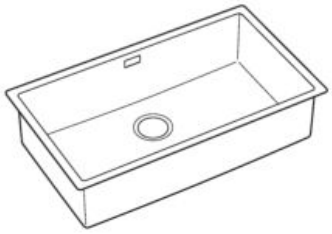

A870E10740	PRAGA 74
A870J10740	PARIS 74

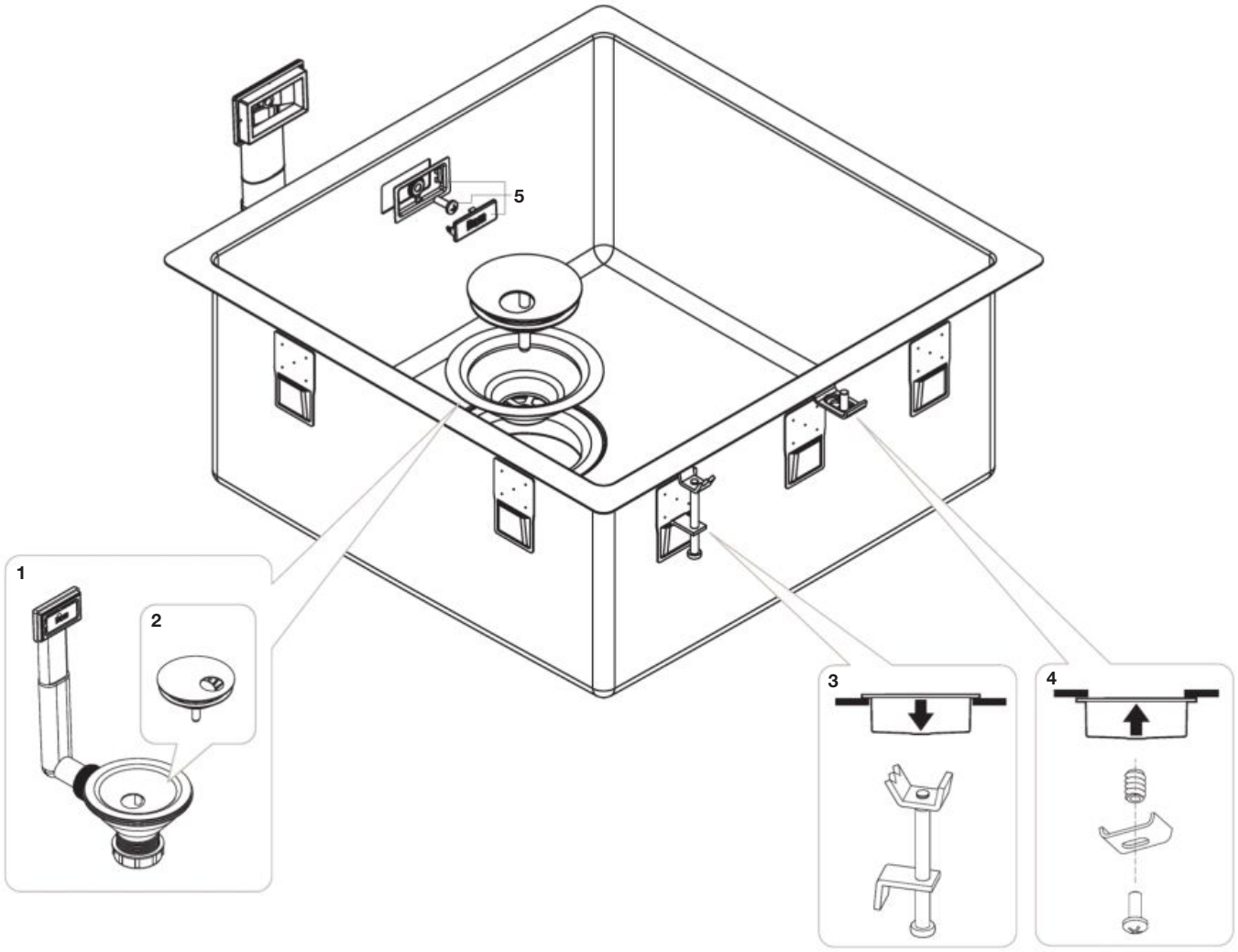

			€
1		**AF0001700R**	48,80
2		**AF0001600R**	17,30
3	12 un	**AF0002300R**	15,60
4	8 un	**AF0003100R**	12,90
5		**AF0002400R**	7,48

Acero inoxidable / Stainless steel

Praga-N: fregadero de una cubeta / Praga-N: Kitchen sink 1 body

MODELOS DE PRODUCTO ACABADO / Finished products models

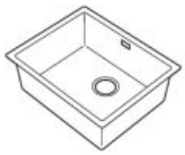

A871741D01	74	**A871501D01**	50
A871451D01	45	**A871401D01**	40

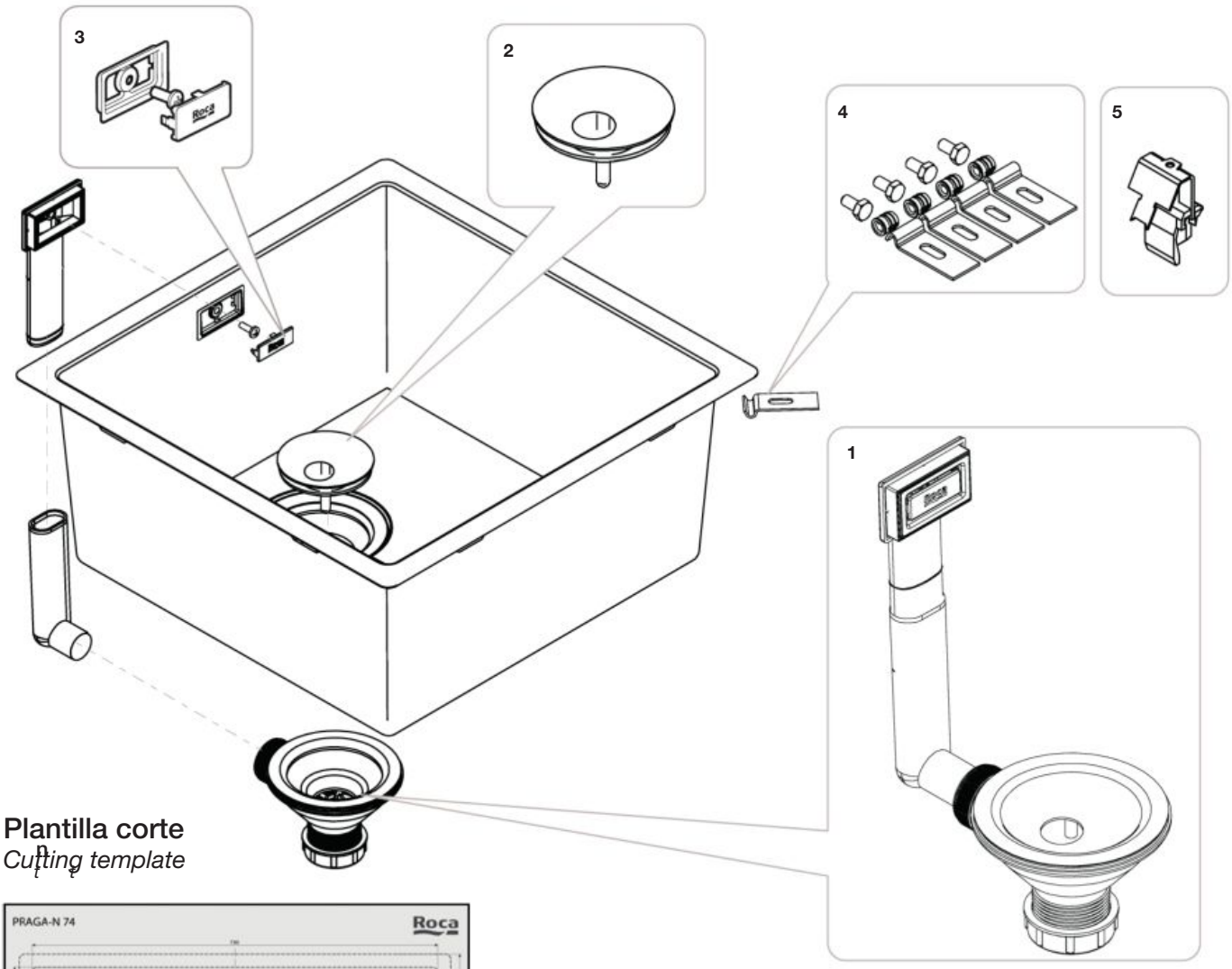

Plantilla corte
Cutting template

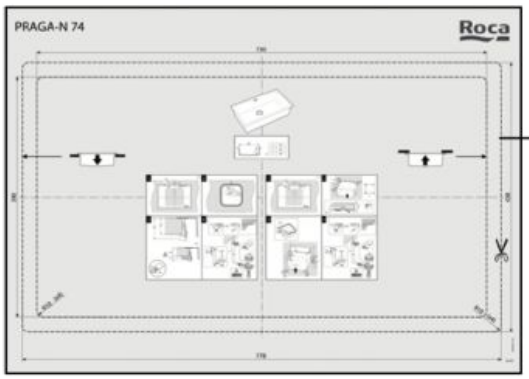

			€
1		**AF0001700R**	48,80
2		**AF0001600R**	17,30
3		**AF0002400R**	7,48
4		**AF0000400R**	5,41
5	8 un	**AF0006500R**	10,60

				€
6		**AF0007200R**	40	2,18
		AF0007300R	45	2,18
		AF0007400R	50	2,18
		AF0007500R	74	2,28

Acero inoxidable / Stainless steel

Roma: fregadero de una cubeta / Roma: Kitchen sink 1 body

MODELOS DE PRODUCTO ACABADO / Finished products models



A870P10700	70
A870P10450	45

A870P10500	50
A870P10400	40

			€
1		**AF0000500R**	33,50
2		**AF0000400R**	5,41
3		**AF0000600R**	8,32
4		**AF0002400R**	7,48
5	8 un	**AF0006500R**	10,60

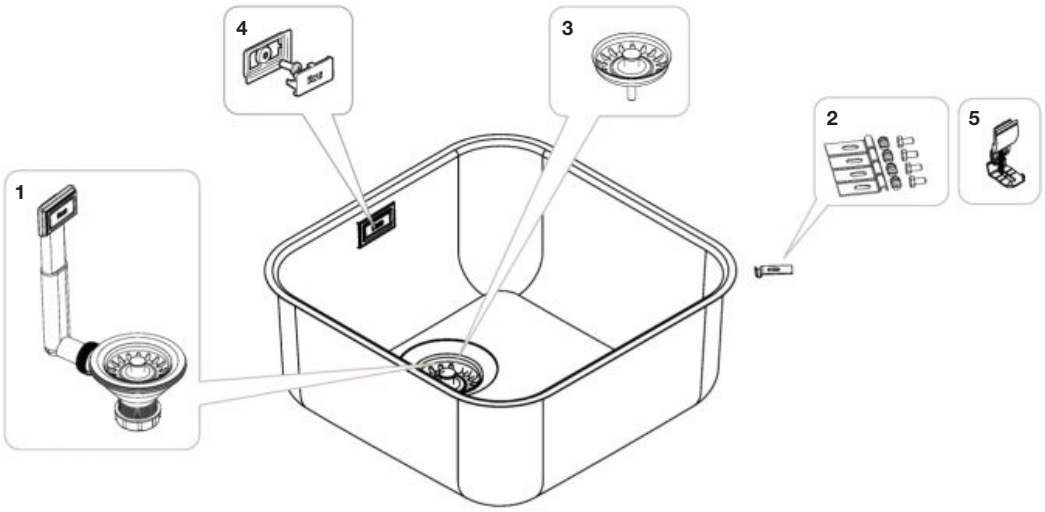

Porto: fregadero de una cubeta / Porto: Kitchen sink 1 body

MODELOS DE PRODUCTO ACABADO / Finished products models



A870R10500	50
A870R10400	40

A870R10450	45
A870R10330	35

			€
1		**AF0000500R**	33,50
2		**AF0000400R**	5,41
3		**AF0000600R**	8,32
4		**AF0002400R**	7,48
5	8 un	**AF0006500R**	10,60

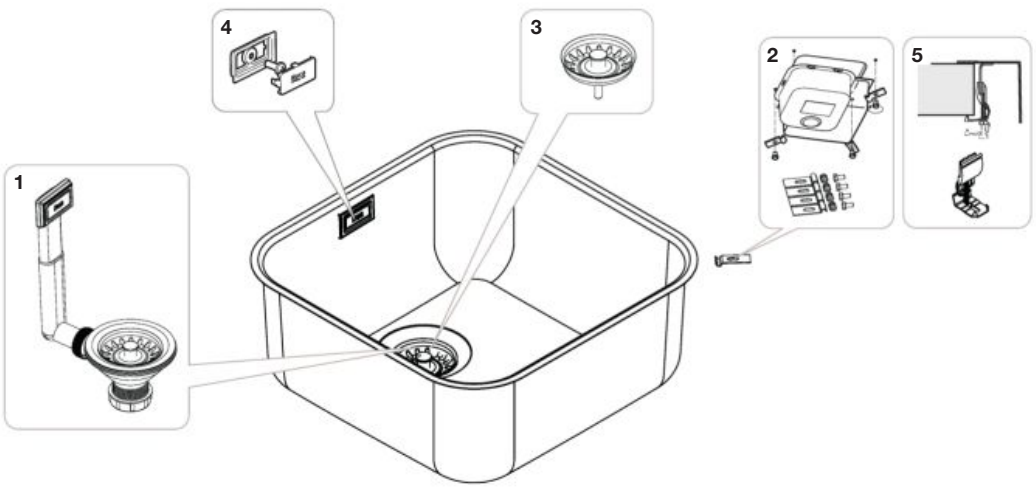

Acero inoxidable / Stainless steel

Lisboa: fregadero de una cubeta / Lisboa: Kitchen sink 1 body

MODELOS DE PRODUCTO ACABADO / Finished products models



A870M10500	50	**A870M10400**	40
A870M10450	45	**A870M10330**	35

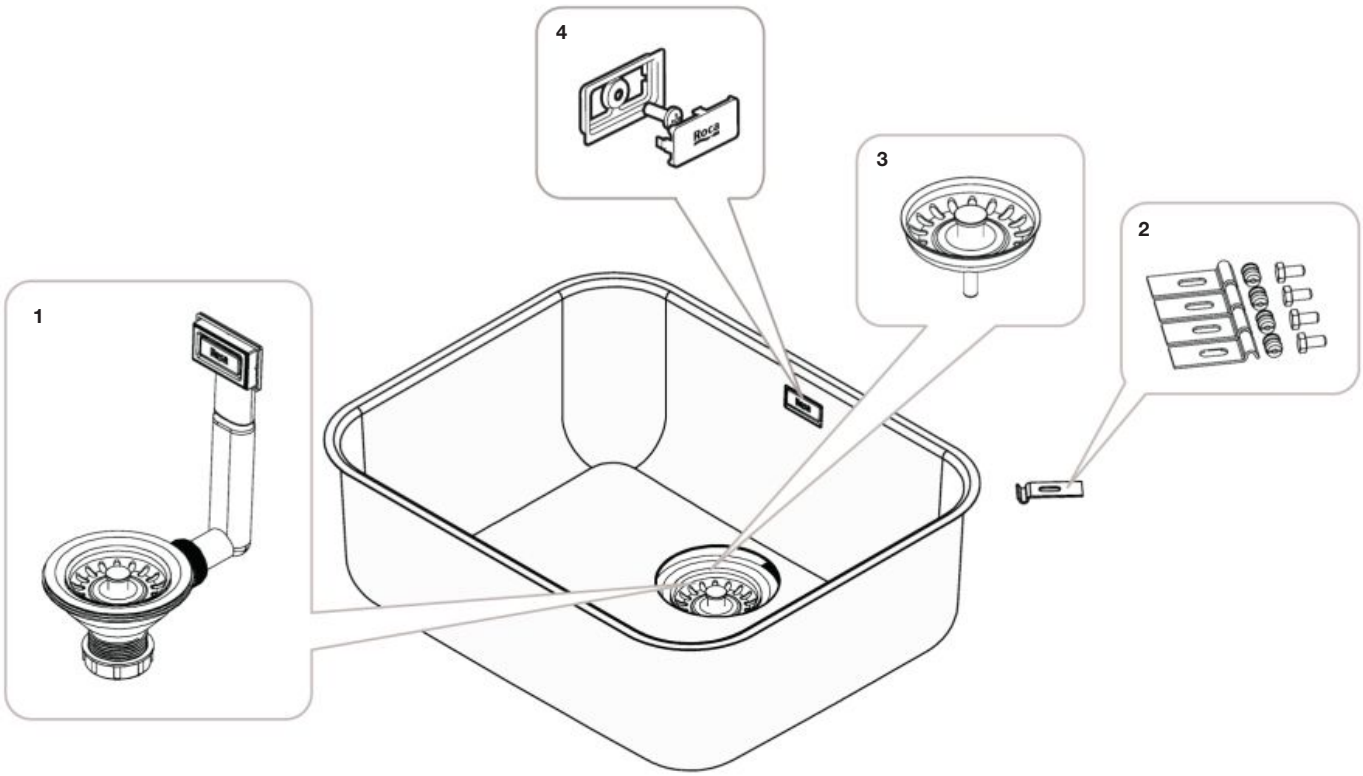

Plantilla corte

Cutting template

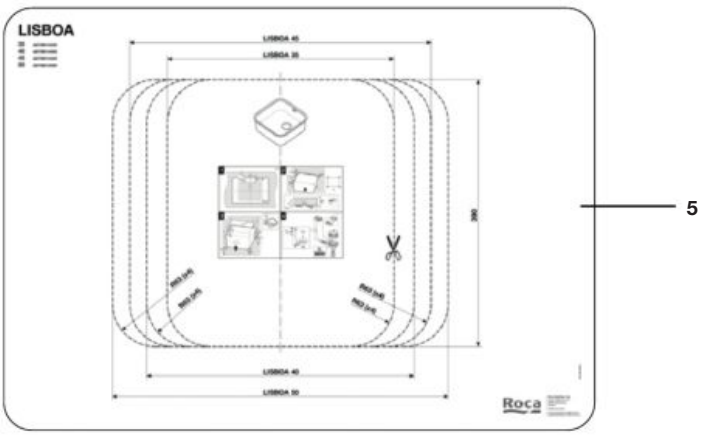

		€
1	**AF0000500R**	33,50
2	**AF0000400R**	5,41
3	**AF0000600R**	8,32
4	**AF0002400R**	7,48
5	**AF0007100R**	2,18

Acero inoxidable / Stainless steel

Siena

MODELOS DE PRODUCTO ACABADO / Finished products models



A870KC0860	85	1C



A870KC1000	100	1C



A870K20860	80	2C

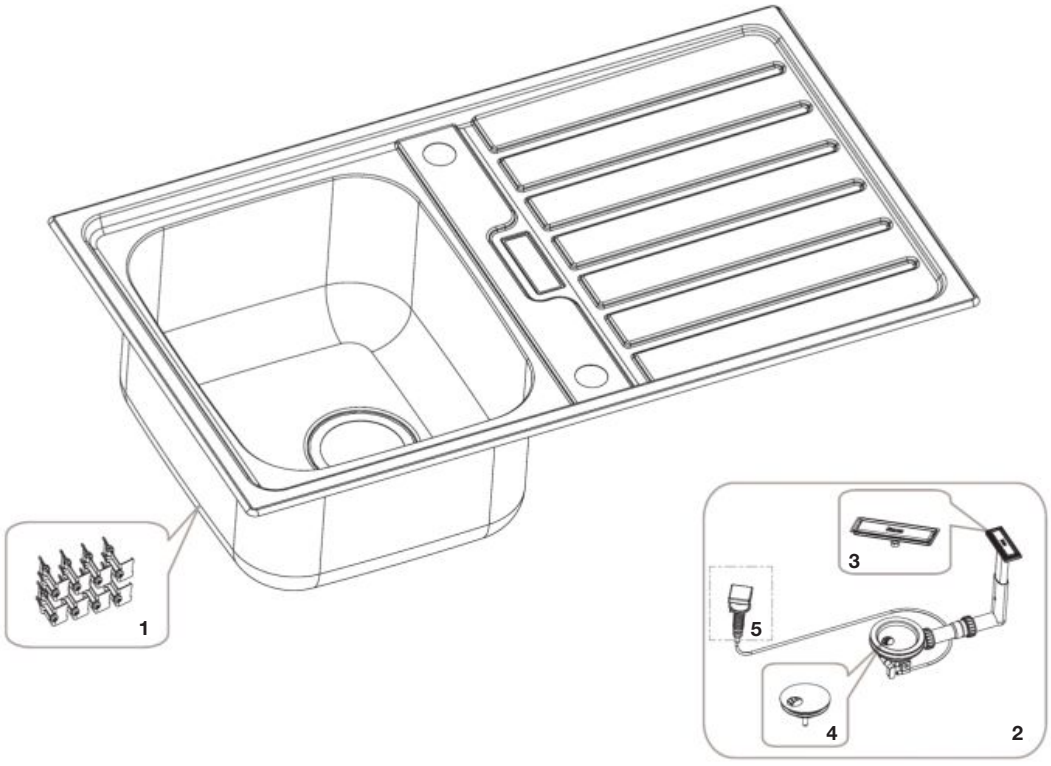

			€
1	**AF0004300R**		5,27
2	**AF0004400R**	1C	38,80
	AF0004500R	2C	60,00
3	**AF0004600R**		11,20
4	**AF0004700R**		27,30
5	**AF0004800R**		14,90

Acero inoxidable / Stainless steel

Budapest: Fregadero de una cubeta / Budapest: Kitchen sink 1 body

A870N30860	BUDAPEST 86	860x500 mm
A870N31000	BUDAPEST 100	1000x500 mm
A870N40860	BUDAPEST 86	860x500 mm
A870N41000	BUDAPEST 100	1000x500 mm

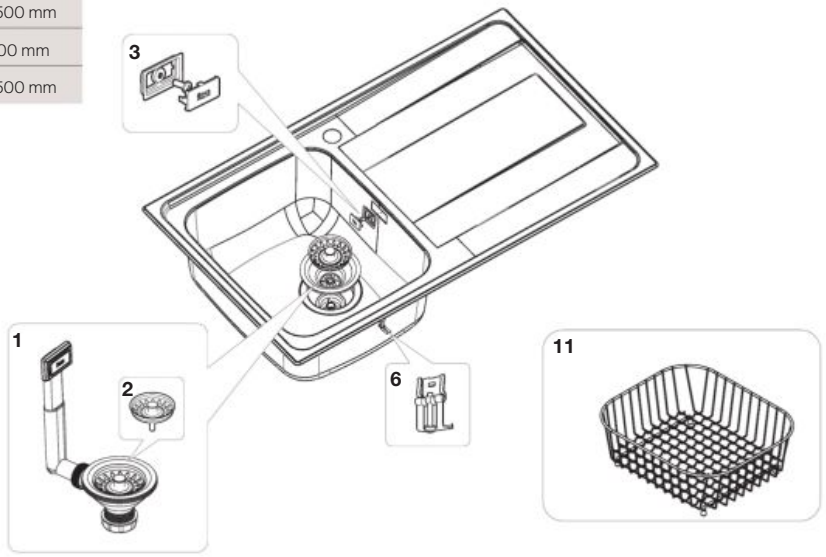

ADMITE / Admits

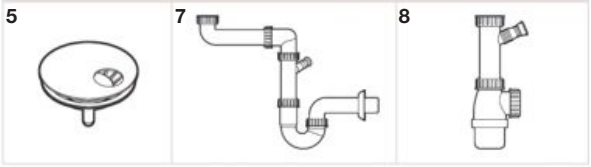

Budapest: Fregadero de dos cubetas / Budapest: Kitchen sinks 2 bodys

A870N20790	BUDAPEST 80 2C	790 x 500 mm

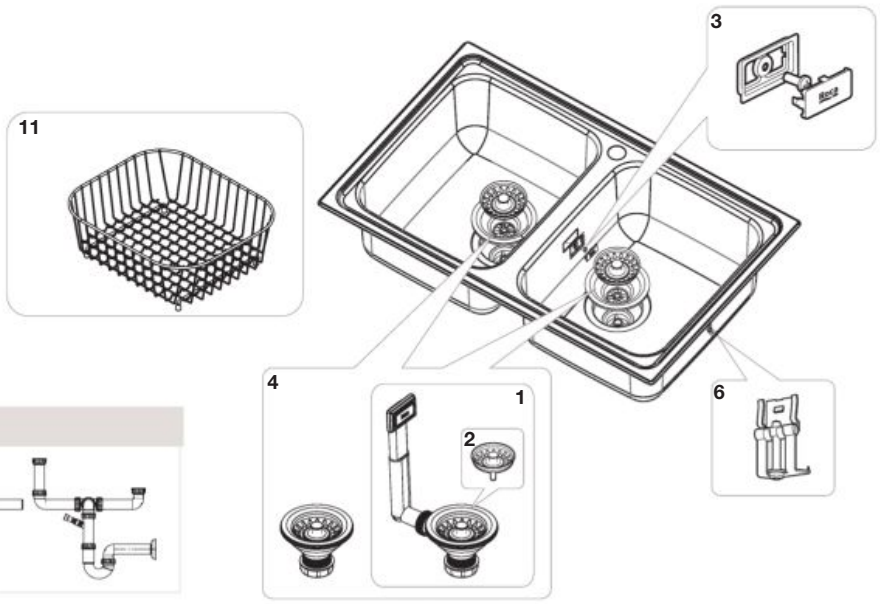

ADMITE / Admits



			€
1		**AF0000500R**	33,50
2		**AF0000600R**	8,32
3		**AF0002400R**	7,48
4		**AF0000000R**	31,50
5		**AF0001600R**	17,30
6	12 un	**AF0005900R**	3,85

Producto acabado compatible:
Finished product compatible:

		€
7	**A506405607**	-
8	**A506405407**	-
9	**A506405507**	-
10	**A506405707**	-
11	**A865090000**	-

Acero inoxidable / Stainless steel

Glasgow: **Fregadero de una cubeta /** Glasgow: Kitchen sink 1 body

A873101C01	GLASGOW 100 ED	1000x500 mm
A874101C01	GLASGOW 100 EI	1000x500 mm
A873801C01	GLASGOW 80 ED	800x500 mm
A874801C01	GLASGOW 80 EI	800x500 mm

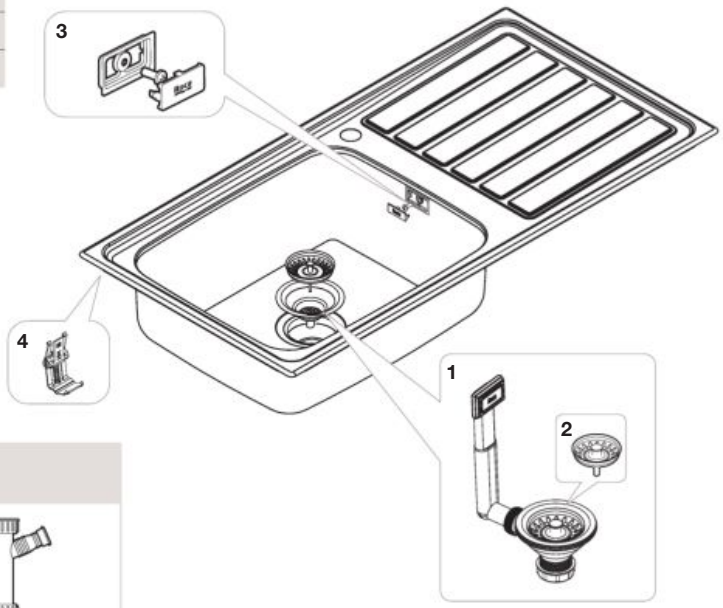

ADMITE / Admits

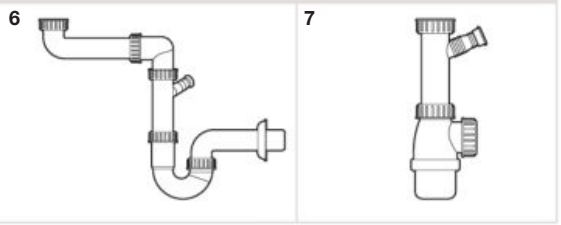

Glasgow: **Fregadero de dos cubetas /** Glasgow: Kitchen sinks 2 bodys

A87R101C01	GLASGOW 100 ED 2C	1000x500 mm
A87S101C01	GLASGOW 100 EI 2C	1000x500 mm
A872801C01	GLASGOW 80	800x500 mm

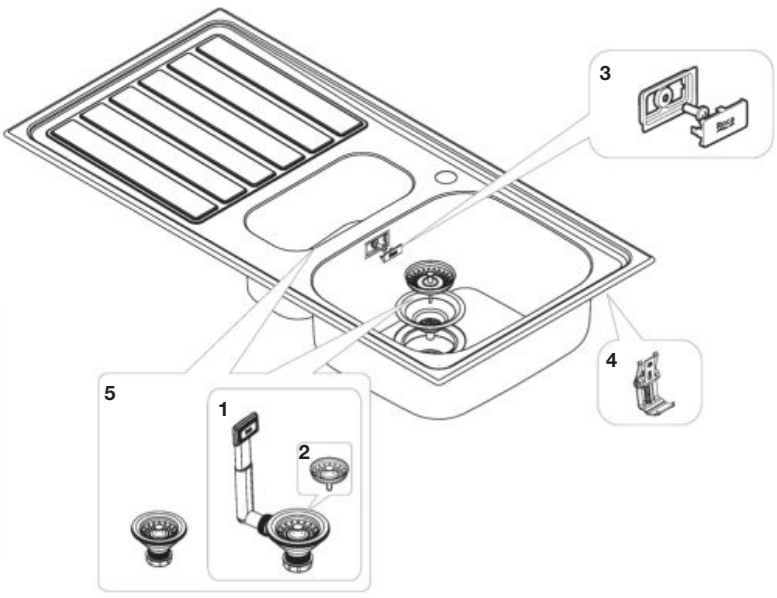

ADMITE / Admits

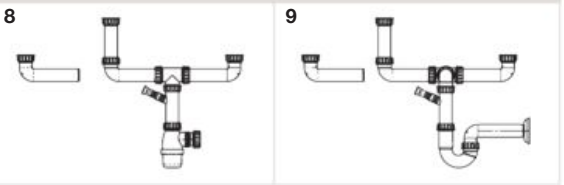

		€
1	**AF0000500R**	33,50
2	**AF0000600R**	8,32
3	**AF0002400R**	7,48
4 12 un	**AF0006700R**	5,20
5	**AF0000000R**	31,50

Producto acabado compatible:
Finished product compatible:

		€
6	**A506405607**	-
7	**A506405407**	-
8	**A506405507**	-
9	**A506405707**	-

Acero inoxidable / Stainless steel

Victoria: Fregadero de una cubeta / Glasgow: Kitchen sink 1 body

A871451A01	VICTORIA 45	450x490 mm
A871601A01	VICTORIA 60	600x490 mm
A874801A01	VICTORIA 80 EI	800x490 mm
A873801A01	VICTORIA 80 ED	800x490 mm
A874901A01	VICTORIA 90 EI	900x490 mm
A873901A01	VICTORIA 90 ED	900x490 mm

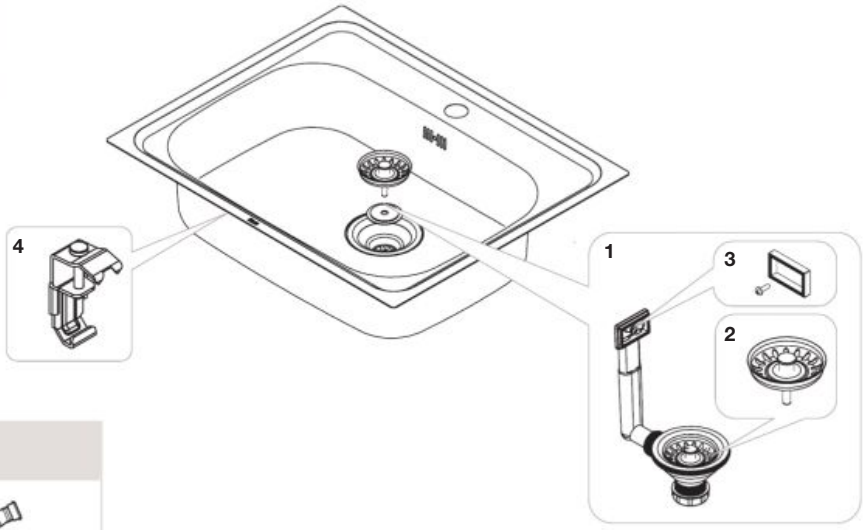

ADMITE / Admits

6

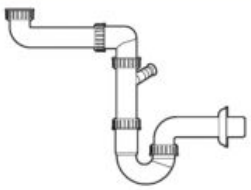

7

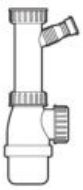

Victoria: Fregadero de dos cubetas / Victoria: Kitchen sinks 2 bodys

A872801A01	VCTORIA 80	800x490 mm
A872901A01	VICTORIA 90	900x490 mm
A874121A01	VICTORIA 120 EI	1200x490 mm
A873121A01	VICTORIA 120 ED	1200x490 mm

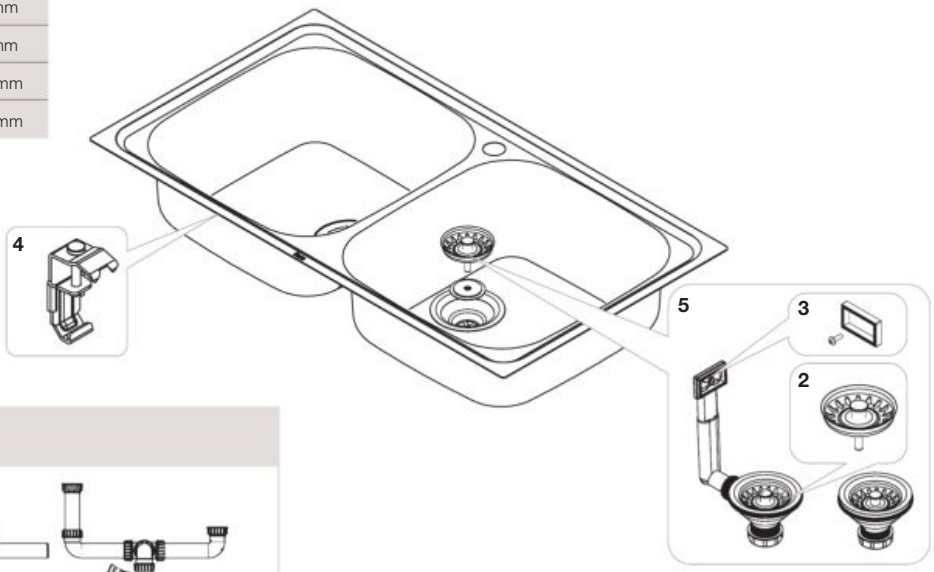

ADMITE / Admits

8

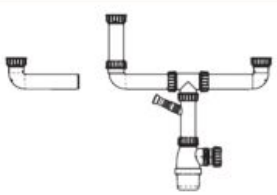

9

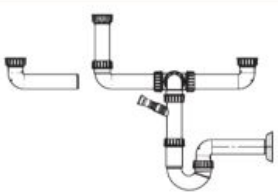

			€
1		**AF0006000R**	17,50
2		**AF0006100R**	7,13
3		**AF0006200R**	2,65
4	6 un	**AF0006300R**	7,30
5		**AF0006400R**	30,70

Producto acabado compatible:
Finished product compatible:

		€
6	**A506405607**	-
7	**A506405407**	-
8	**A506405507**	-
9	**A506405707**	-

Acero inoxidable / Stainless steel

BP

A870110350	BP 0
A870110400	BP 2
A870110500	BP 3

Si el rebosadero de su fregadero es como imagen A, es anterior a 2016. Si su fregadero es como imagen B, fregadero es posterior a 2016. Atención a los recambios específicos de cada año. / If it the overflow of your sink is like image A, is prior to 2016. And if it is like image B, sink is later than 2016. Attention to specific spare parts of each year.

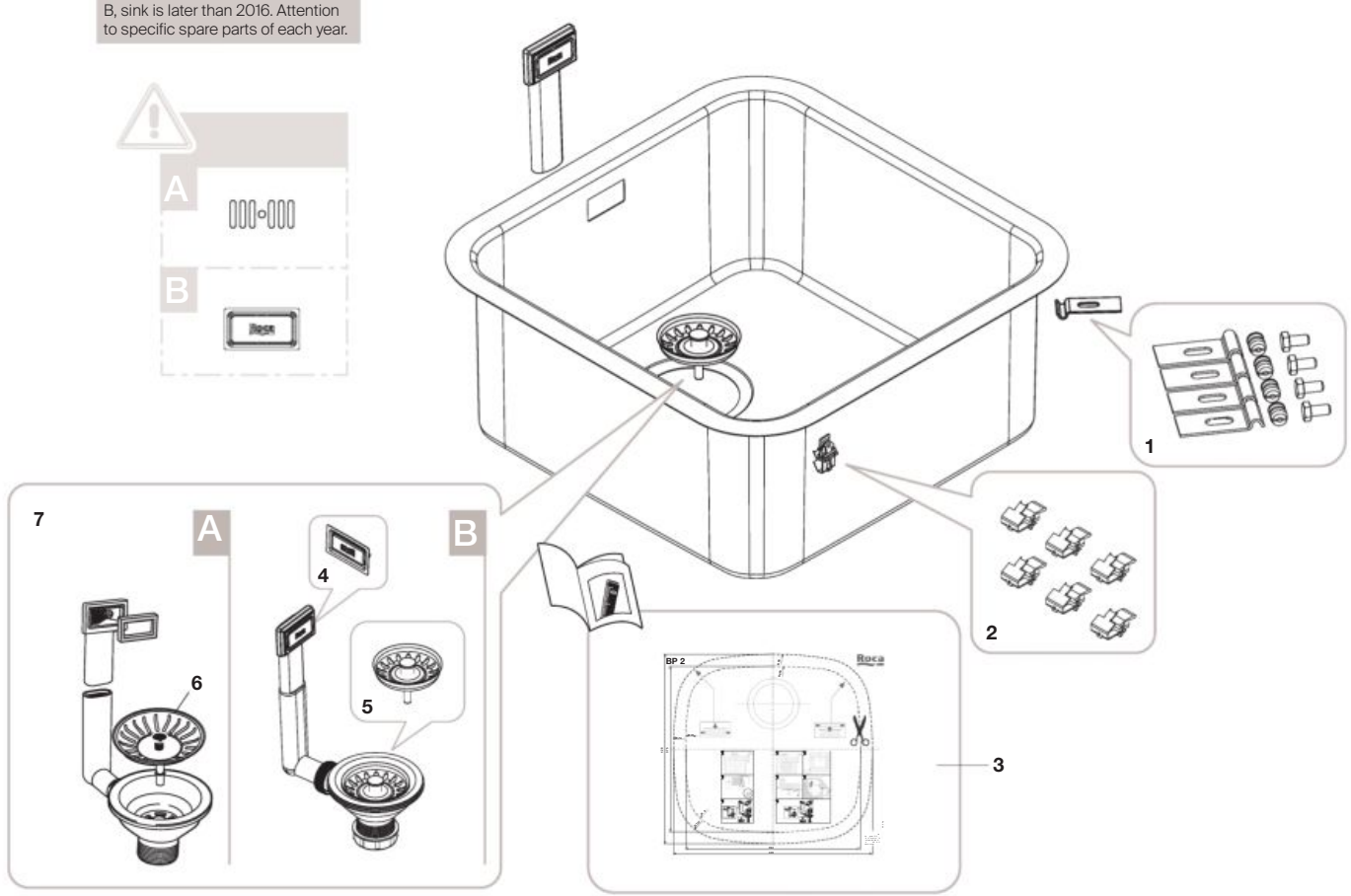

			€
1	**AF0000400R**		5,41
2	**AF0001100R**		8,11
3	**AF0004900R**	BP0	1,76
	AF0005000R	BP2	1,93
	AF0005100R	BP3	2,03
4	**AF0005400R**	B	7,95
5	**AF0000600R**	B	8,32
6	**AF0000300R**	A	6,65
7	**AF0000500R**	B	33,50

Acero inoxidable / Stainless steel

J-Plus

MODELOS DE PRODUCTO ACABADO / Finished products models

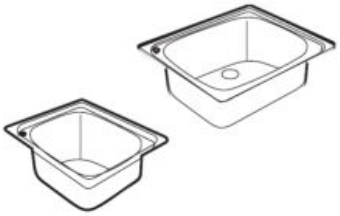

A870L10450	J45 Plus	1C
A870L10600	J60 Plus	1C



A870L20800	J80 Plus	2C



A870L30800	J80 ED Plus	1C



A870L40800	J80 EI Plus	1C

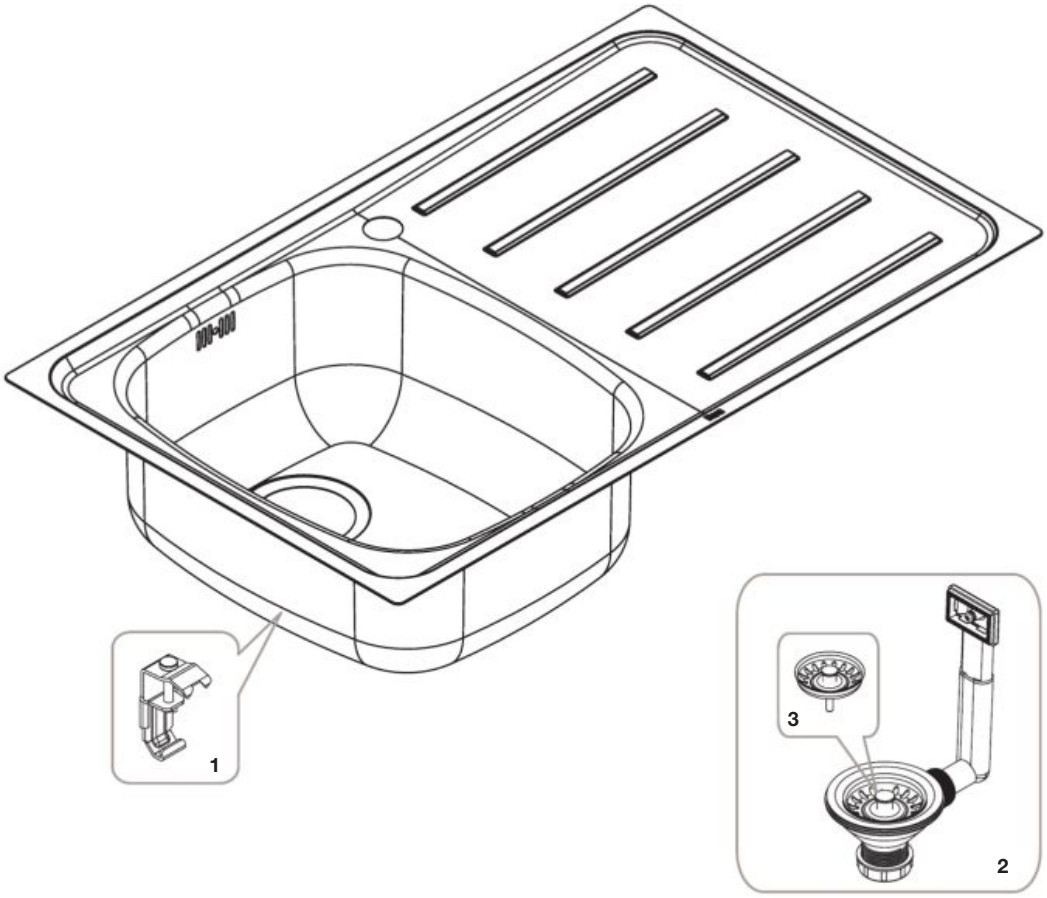

				€
1	12 un	**AF0004100R**		9,82
2		**AF0000100R**	1C	17,70
		AF0000000R	2C	31,50
3		**AF0000300R**		6,65

Acero inoxidable / Stainless steel

X-Tra

MODELOS DE PRODUCTO ACABADO /
Finished products models



A876710815	81	**A876710465**	46
A876710615	61	**A876710265**	26



A876731005	100
A876741005	100



A876780465	46 E

Recambios comunes / Common spare parts

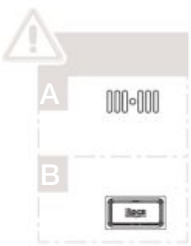

Si el rebosadero de su fregadero es como imagen A, es anterior a 2016. Si su fregadero es como imagen B, fregadero es posterior a 2016. Atención a los recambios específicos de cada año. / If it the overflow of your sink is like image A, is prior to 2016. And if it is like image B, sink is later than 2016. Attention to specific spare parts of each year.

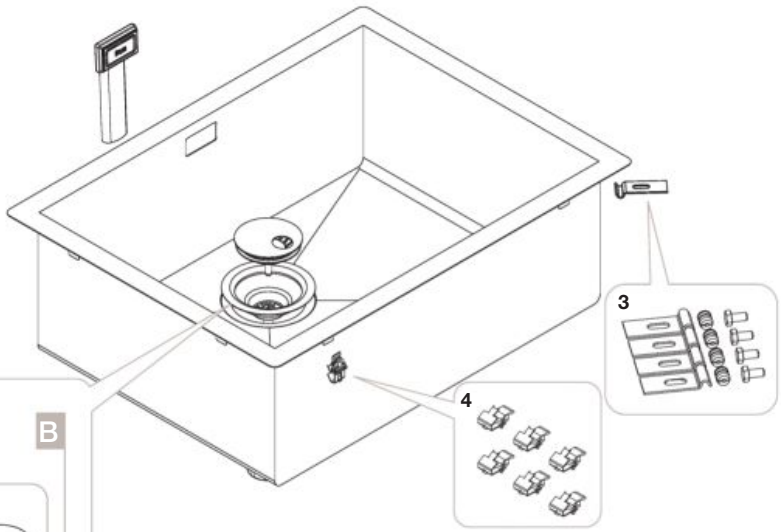

Si el cestillo es como el de la imagen el recambio es el desagüe completo 1A.



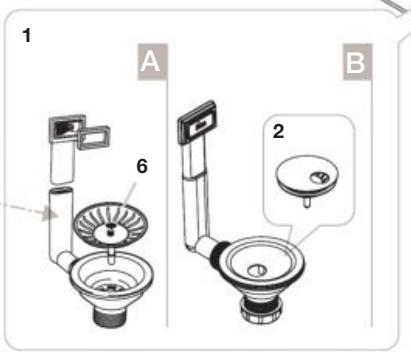

Recambios específicos / Specific spare parts

A876780465

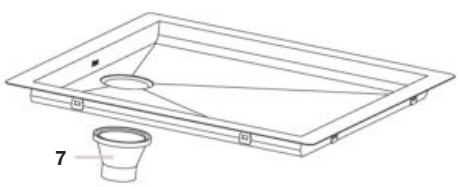

			€
1	**AF0001700R**	B	48,80
	AF0002000R	A	-
2	**AF0001600R**	B	17,30
3	**AF0000400R**		5,41

			€
4	**AF0001100R**		8,11
6	**AF0000600R**	A	8,32
7	**AF0001900R**	46 E	-

Acero inoxidable / Stainless steel

Berlin

MODELOS DE PRODUCTO ACABADO / Finished products models



A870A10550	55	**A870A10400**	40
A870B10550	55 Plus	**A870B10400**	40 Plus



A870AA0640	20 + 40
A870AB0640	40 + 20



A870A10200	20

Nuevos fregaderos / New kitchen sinks

A871551B00	55	**A871401B00**	40
A871701B00	70		

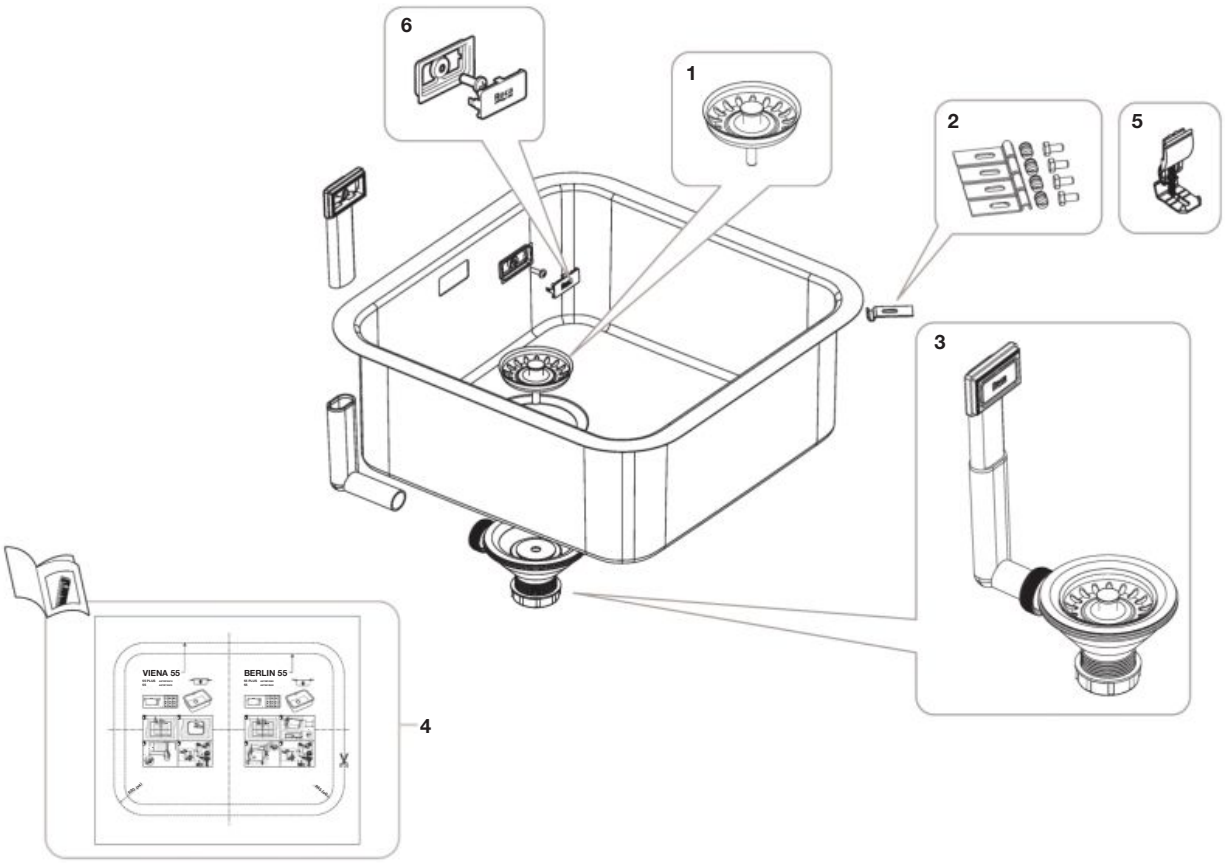

			€
1	**AF0000600R**		8,32
2	**AF0000400R**		5,41
3	**AF0000500R**		33,50
4	**AF0000900R**	55 / 55 Plus	2,30
	AF0000800R	40 / 40 Plus	2,30
	AF0001000R	40+20 / 20+40	2,43
	AF0000700R	20	2,13
	AF0006600R	70	2,43
5 8 un	**AF0006500R**		10,60
6	**AF0002400R**		7,48

Acero inoxidable / Stainless steel

Viena

MODELOS DE PRODUCTO ACABADO / Finished products models



A870C10610	55
A870D10610	55 Plus

A870C10460	40
A870D10460	40 Plus



A870CA0700	20 + 40
A870CB0700	40 + 20



A870C10260	20

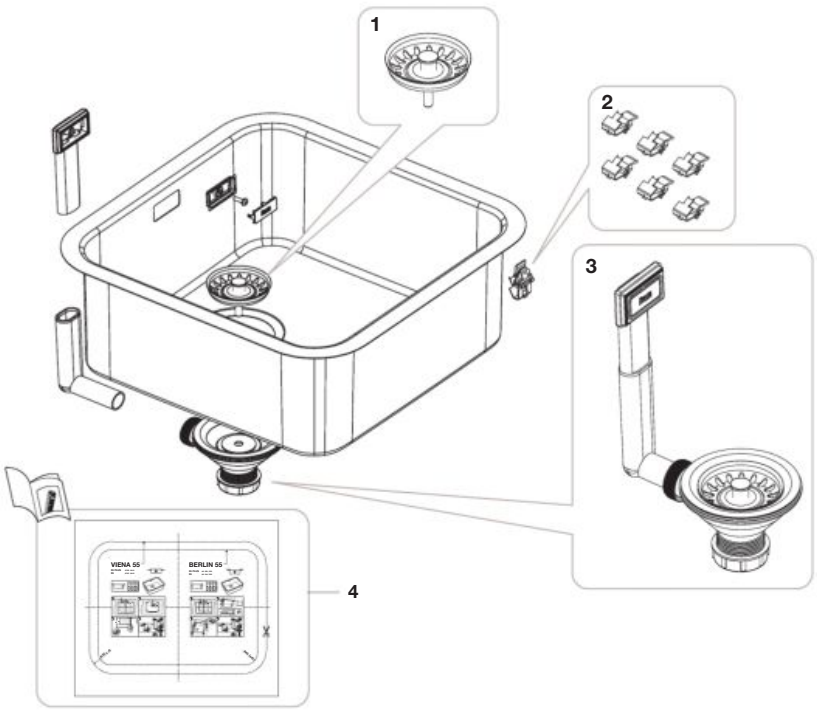

			€
1	**AF0000600R**		8,32
2	**AF0000200R**		11,30
3	**AF0000500R**		33,50
4	**AF0000900R**	55 / 55 Plus	2,30
	AF0000800R	40 / 40 Plus	2,30
	AF0001000R	40+20 / 20+40	2,43
	AF0000700R	20	2,13

Acero inoxidable / Stainless steel

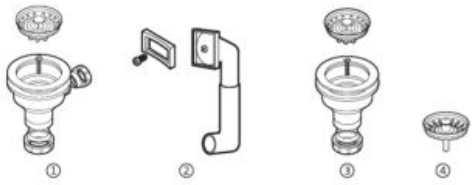

Recambios Suprema, Cumbre / Spare parts Suprema, Cumbre

			€
AF0005500R	Cumbre / Suprema	Válvula 3 ½" automática con rebosadero y con mando / Automatic 3 ½" valve with overflow and handle	88,20
A870002112	Cumbre / Suprema	Válvula 3 ½" manual / 3 ½" manual valve	30,90
A870002116	Cumbre / Suprema	Conjunto desagües / Drains set 2 cubetas /2 buckets	22,00
A870002118	Cumbre / Suprema	Conjunto fijaciones / Set of fixings	12,20
A870002125	Cumbre / Suprema	Tornillo hueco válvulas / Hollow screw valves	2,91

Recambios Duo, Ruedo, Redondo, BP, Cuadra, Serie P / Spare Parts Duo, Ruedo, Redondo, BP, Cuadra, Serie P

			€
① **AF0000000R**	Válvula desagüe 3 ½" con orificio para rebosadero y tapón cestillo / Drain valve 3 ½" with hole for overflow and basket cap		31,50
② **A870000500**	Conjunto rebosadero / Overflow set		9,93
③ **AF0000100R**	Válvula desagüe 3 ½" con tapón cestillo / Drain valve 3 ½" with basket cap		17,70
④ **AF0000300R**	Tapón cestillo para válvula desagüe 3 ½" / Basket cap for drain valve 3 ½"		6,65
AF0001100R	Conjunto fijaciones (6 unidades) / Fixing set (6 units)	Duo, Ruedo, Redondo y Cuadra	8,11
A870002159	Conjunto fijaciones (4 unidades) / Fixing set (4 units)	BP	14,40
A870000390	Conjunto fijaciones (8 unidades) / Fixing set (8 units)	Serie P	12,10





Recambios para fregaderos J y E / Spare parts for sinks J and E

			€
① **A870000190**	J y E	Válvula simple / Single valve	5,33
A870000190(1)	J y E 62 ø		5,33
② **A870000220**	J y E	Válvula para rebosadero / Overflow valve	5,33
A870000220(1)	J y E 62 ø		5,33
③ **A870000500**		Conjunto de rebosadero / Overflow assembly	9,93

(1) Para modelos anteriores a 1993 / For models before 1993.

			€
④ **A870002035**	2 cubetas J y E	Tapón doble cadenilla de 300 / 300 chain double stopper	5,80
A870000380(1)	2 cubetas J y E		9,25
A870000390	J	Conjunto de fijaciones (8 unidades) / Fixing set (8 units)	12,10

(1) Para modelos anteriores a 1993 / For models before 1993.

Varios / Others

		€
A870002125	Tornillo hueco válvula (c/s) / Valve hollow screw (c/s)	2,91
AF0000300R	N-tapón cest. recoge. 90 F_A / N-plug cest. pick up. 90 F_A	6,65

Gres

			€
A892002000	Beverly MAX	Conjunto desagüe / Drain set	32,90
A880066001	Beverly 130	Kit desagüe automático / Automatic drainage kit	53,20
A880067001	Beverly 110, 85, 85 E, 60 y 50		53,20
A880801001		Tapón y cestillo válvulas 3 ½", desagüe automático / 3 ½" valve cap and basket, automatic drain	17,90
A888010000		Junta cierre del tapón-cestillo válvulas 3 ½" / 3 ½" valve plug-basket closure gasket	4,69

			€
A892004000	Beverly 110	Conjunto de válvulas 3 ½" y desagües / Set of 3 ½" valves and drains	60,80
A892005000	Beverly 85		60,80
A892006000	Beverly 85 E		30,90
A880076001	Beverly 50		-
A870000860		Tapón y cestillo válvulas 3 ½", desagüe manual / 3 ½" valve cap and basket, manual drain	11,90
A888010000		Junta cierre del tapón-cestillo válvulas 3 ½" / 3 ½" valve plug-basket closure gasket	4,69
A861090..0	Beverly 130, Beverly 60	Recogedor / Picker	-

Sustituir (..) de la referencia de producto por el código del acabado elegido:
In the product reference replace (..) with the code for the selected finish code:

00 Blanco /White	**49** Granito /Granite	**46** Marrón Maya /Maya brown
45 Beige Teneré /Bever beige	**59** Antracita /Anthracite	**44** Terre de France /Bever terre
43 Merengue /Mering	**42** Gris Islandia /Iceland grey	**48** Altamar /Altamar

Silacryl

Chef-1

A880011..0

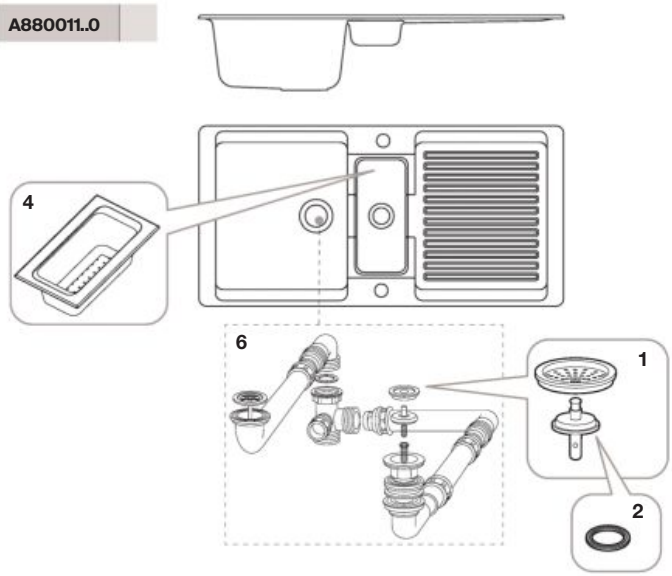

Chef-2

A880021..0

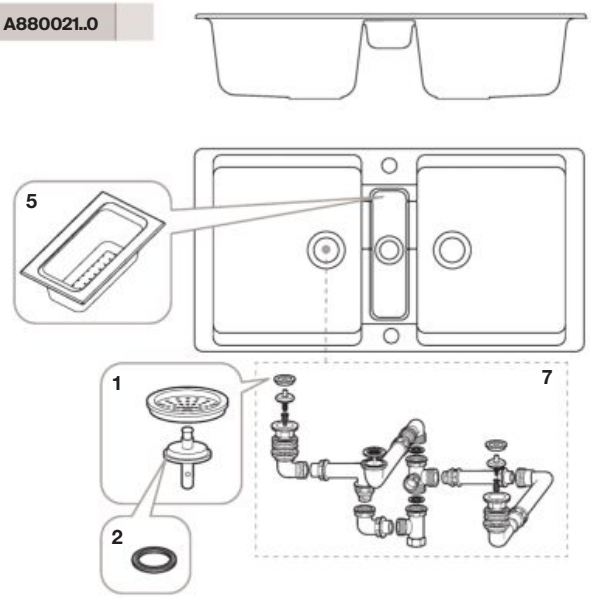

Chef-3

A880032..0

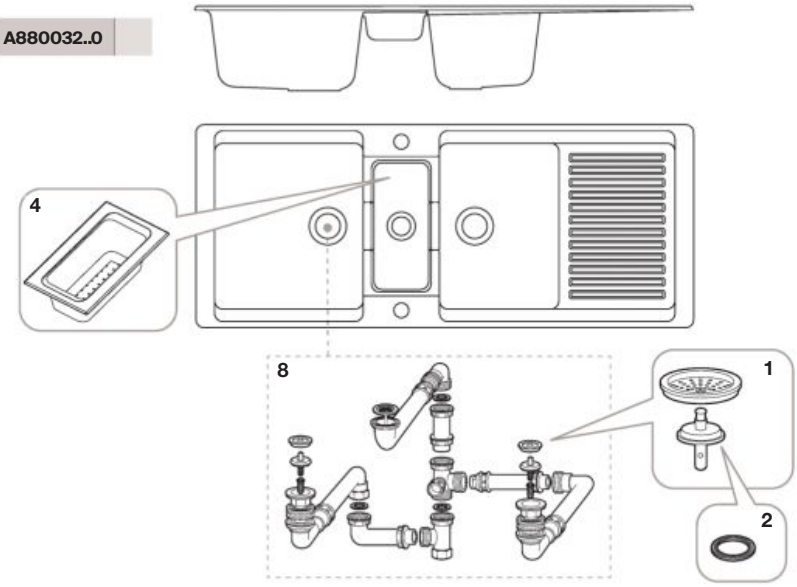

ADMITE (no incluido) / ADMITS (not included)

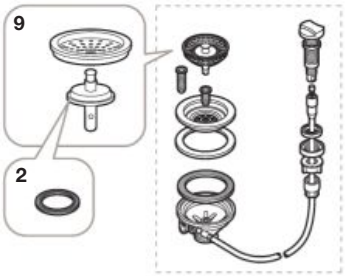

			€
1	**A870002018**		11,60
2	**A888009000**		4,69
4	**A861050430**	MERENGUE /MERINGUE	25,30
	A861050480	ALTAMAR /HIGH SEAS	25,30
	A861050490	GRANITO /GRANITE	25,30

			€
5	**A861060450**	BEIGE TENERÉ	-
	A861060480	ALTAMAR /HIGH SEAS	15,90
	A861060490	GRANITO /GRANITE	15,90
6	**A870002000**	MANUAL	54,00
7	**A870002001**	MANUAL	89,70
8	**A870002002**	MANUAL	N.D.
9	**A880800001**		17,90

Silacryl

Gourmet-1

A880040..0

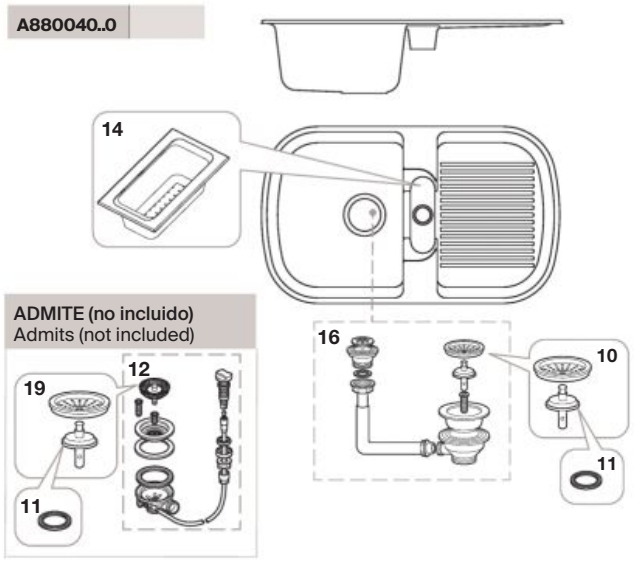

Gourmet-2

A880050..0

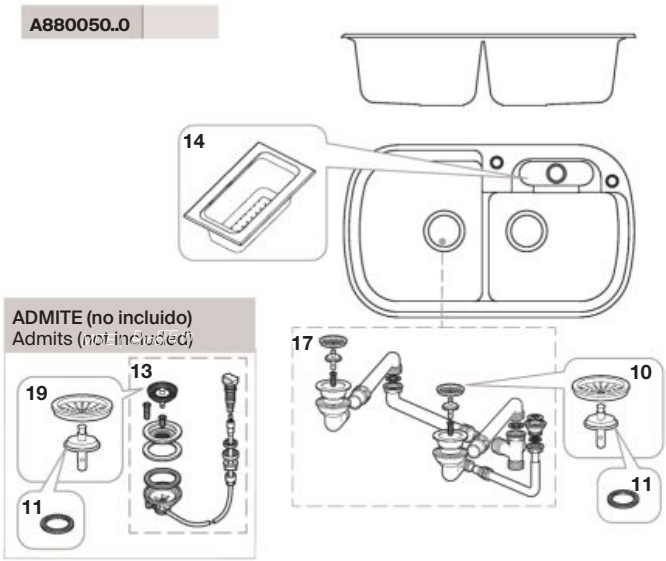

Maxims

A880060..0

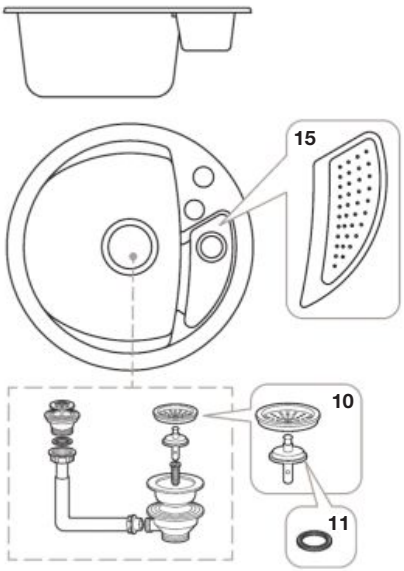

Bermeo

A880070..0

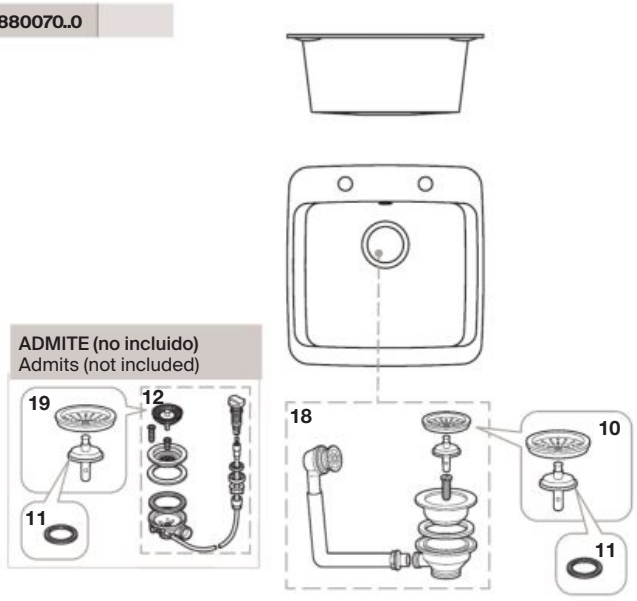

			€
10	**A870000860**		11,90
11	**A888010000**		4,69
12	**A880067001**	AUTOMÁTICO /AUTOMATIC	53,20
13	**A880066001**	AUTOMÁTICO /AUTOMATIC	53,20
14	**A861080450**	BEIGE TENERÉ	12,30
	A861080480	ALTAMAR /HIGH SEAS	12,30
	A861080490	GRANITO /GRANITE	12,30

			€
15	**A861070000**	BLANCO /WHITE	13,60
	A861070430	MERENGUE /MERINGUE	13,60
	A861070440	TERRE DE FRANCE	13,60
	A861070450	BEIGE TENERÉ	13,60
17	**A880055000**	MANUAL /MANUAL	83,20
18	**A880076001**	MANUAL /MANUAL	-
19	**A880801001**		17,90

Silacryl

A ts-1

A880101..0

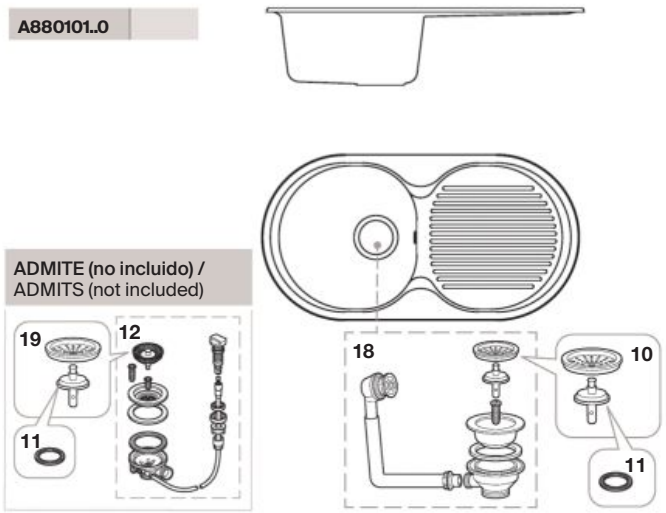

Arts-2

A880091..0

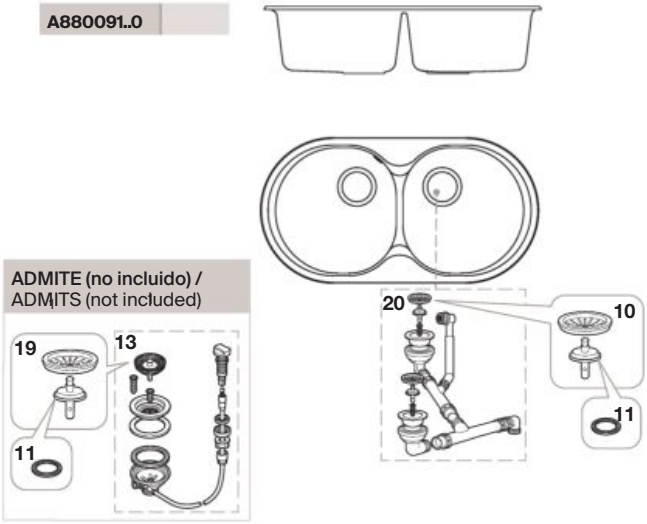

Veneto

A880110..0

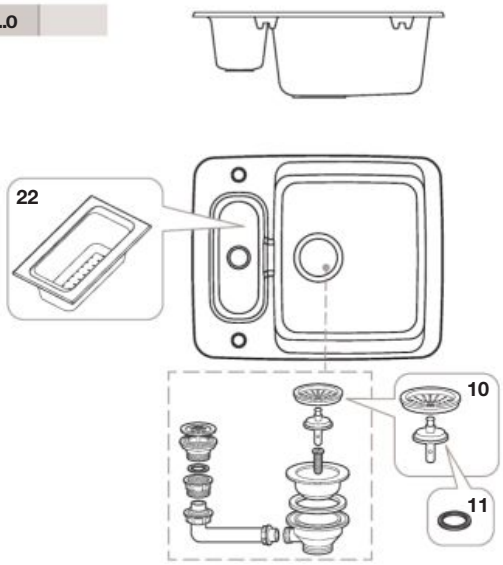

Jockey

A880081..0

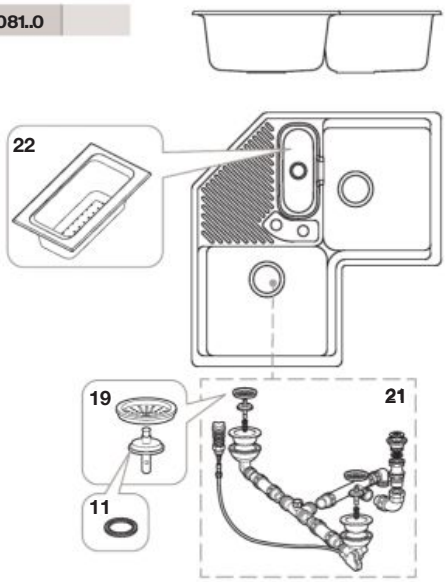

			€
10	**A870000860**		11,90
11	**A888010000**		4,69
12	**A880067001**	AUTOMÁTICO /AUTOMATIC	53,20
13	**A880066001**	AUTOMÁTICO /AUTOMATIC	53,20
18	**A880076001**	MANUAL /MANUAL	-
19	**A880801001**		17,90
20	**A880093001**	MANUAL /MANUAL	68,50

			€
21	**A880083001**	AUTOMÁTICO /AUTOMATIC	N.D.
22	**A861090000**	BLANCO /WHITE	22,30
	A861090430	MERENGUE /MERINGUE	22,30
	A861090440	TERRE DE FRANCE	22,30
	A861090450	BEIGE TENERÉ	22,30
	A861090480	ALTAMAR /HIGH SEAS	22,30
	A861090490	GRANITO /GRANITE	22,30

Sistemas de instalación /
Installation systems



DUPLO & PL7

804 **Sistemas Duplo Armani / Casa /** Armani / Casa Duplo Systems

805 **Placas de accionamiento Armani / Casa** Armani / Casa Push Plates

806 **Sistemas Duplo One /** Duplo One Systems

812 **Placas de accionamiento One /** Plush plates One

815 **Sistemas Duplo S /** Duplo S Systems

824 **Placas de accionamiento Duplo S** / Plush Plates Duplo S

825 **Sistemas Duplo /** Duplo Systems

841 **Placas de accionamiento /** Plush plates

846 **Duplo Retro**


PL10

Sistemas Duplo Armani / Casa /
Armani / Casa Duplo Systems

Armani / Roca Duplo WC

A890090400

Retirar placa y tapa de accionamiento del Duplo. Si es como en la imagen A, Duplo anterior a 2014 y, si es como la imagen B, Duplo posterior a 2014. Atención a los recambios específicos de cada año.

Remove the cover and the driven plate. If it is like image A, it is prior to 2014 and if it is like the image B, Duplo is later than 2014. Attention to specific spare parts of each year.

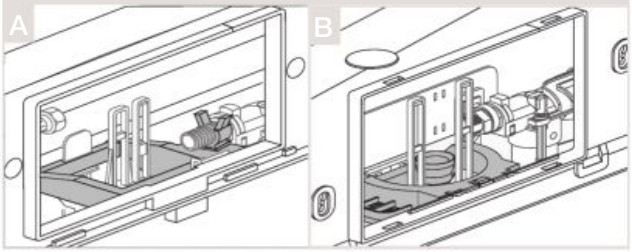

			€
1	**AV0001800R**	A	32,00
	AV0027600R	B	33,50
2	**AV0011800R**		38,70
3	**AV0001900R**		11,90
4	**AV0011900R**	A	55,40
	AV0025700R	B	53,60
5	**AV0001200R**		47,60
6	**AV0001000R**		19,70
7	**AV0025600R**		36,80
8	**AV0014600R**	A	37,50
	AV0040400R	B	55,20
9	**AV0012000R**		26,90

			€
10	**AV0002900R**		24,70
11	**AV0001100R**	Ø90	73,20
	AV0004800R	Ø110	15,90
12	**AV0047600R**		20,50
13			
14	**AV0003000R**		26,90
15	**AV0031100R**	A	80,90
	AV0031300R	B	80,90
16	**AV0025900R**		12,50
17	**AV0004900R**		38,00
18	**AV0022200R**		11,70

Placas de accionamiento Armani / Casa
Armani / Casa Push Plates

Placa electrónica Baia / Baia electronic plate

PRODUCTO ACABADO Finished product	
A8901900R3	Greige
A8901900R5	Dark Metallic

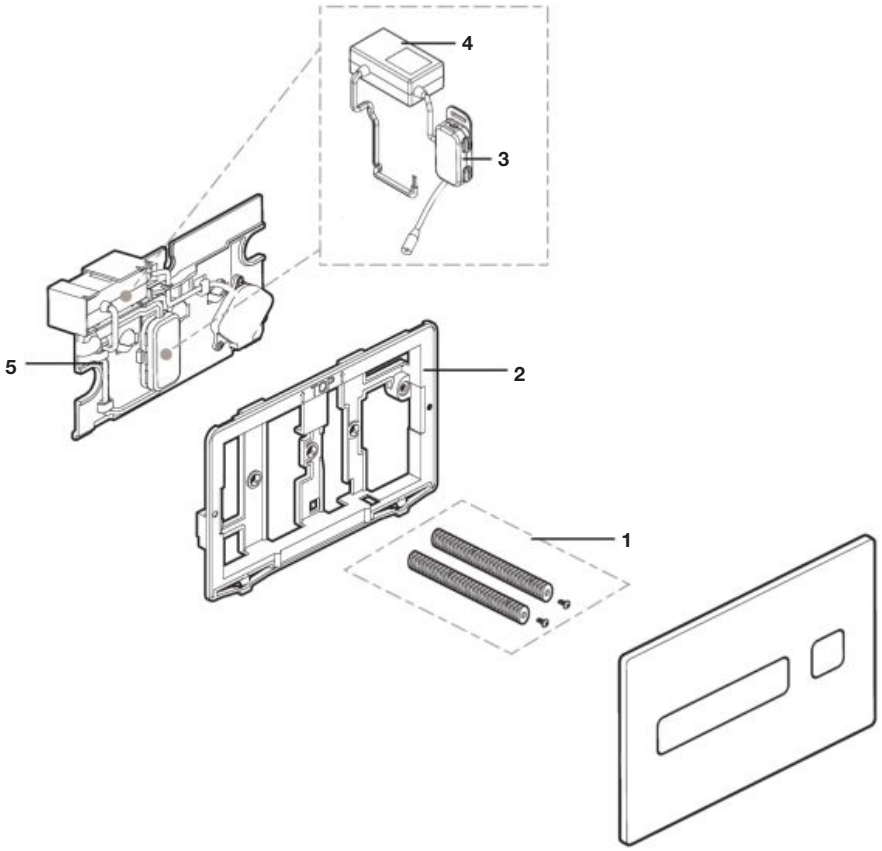

			€
1	**AV0000800R**		55,10
2	**AV0000700R**		40,50
3	**AG0103407R**		10,60
4	**AV0035000R**	12 V	91,50
5	**AV0031800R**		92,40

Placa electrónica Island / Island electronic plate

PRODUCTO ACABADO Finished product	
A8900970R0	Chrome
A8900970R3	Greige
A8900970R5	Nero
A8900970R6	Brushed Steel

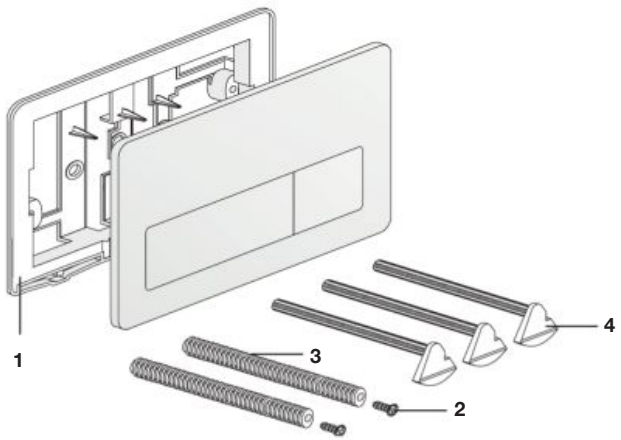

			€
1		**AV0000700R**	40,50
2	2 un		
3	2 un	**AV0000800R**	55,10
4	3 un		

Sistemas Duplo One /
Duplo One Systems

Duplo WC One

A890070020

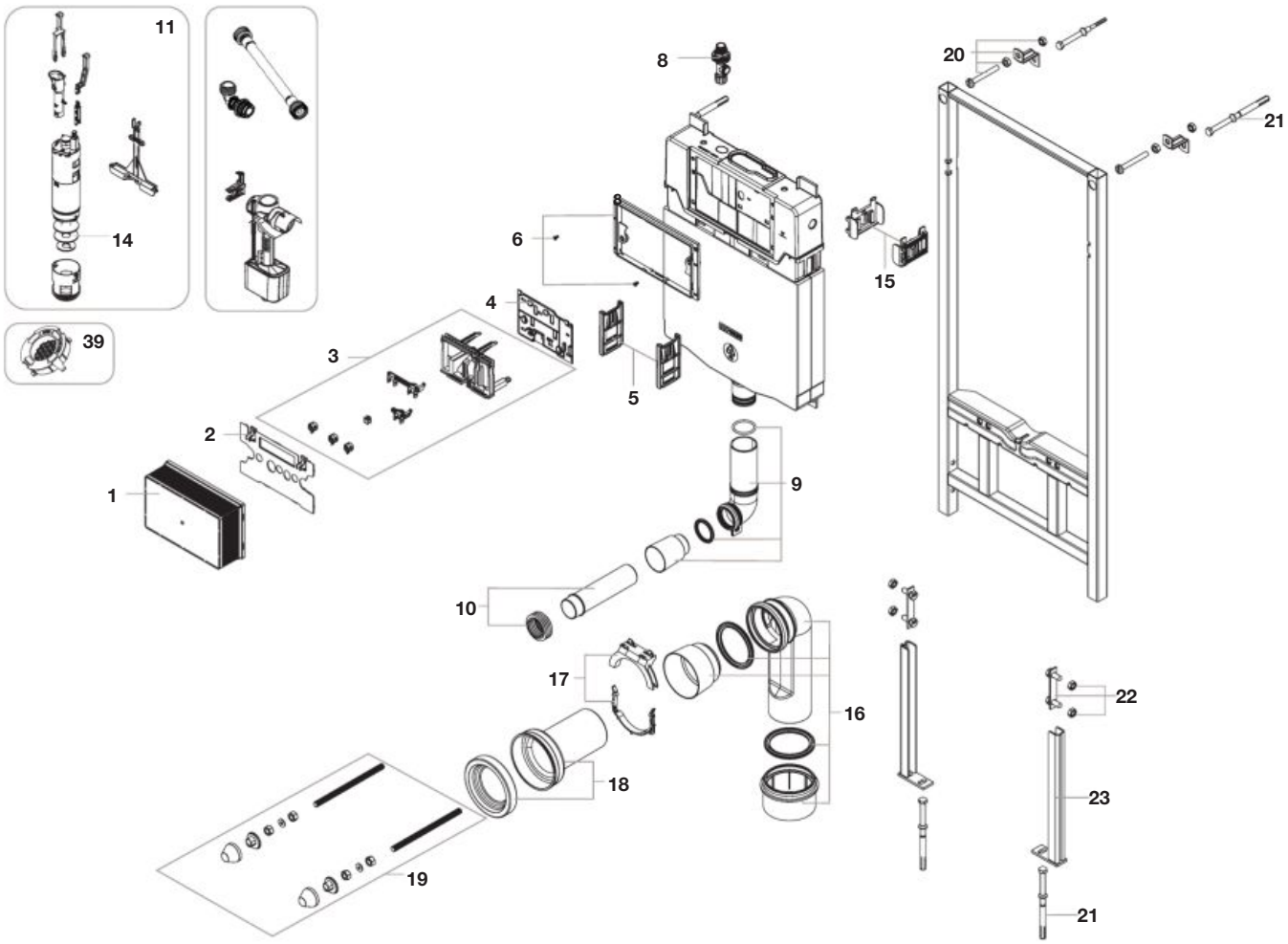

		€
1	**AV0045700R**	7,12
2 4 6	**AV0045800R**	12,80
3	**AV0045900R**	9,55
5	**AV0046100R**	2,44
8	**AV0046400R**	32,60
9	**AV0046500R**	12,00
10	**AV0046600R**	4,42
12	**AV0062100R**	33,50
14	**AV0048100R**	5,20
15	**AV0047000R**	2,61

			€
16	**AV0047100R**		43,50
17	**AV0047200R**		3,92
18	**AV0047300R**		18,80
19	**AV0047400R**		10,40
20 2 un 21 2 un	**AV0047500R**		21,50
21 2 un 22 2 un 23 2 un	**AV0047700R**		79,10
39	**AV0054800R**	Gris 2,1l/s / Grey 2,1l/s	2,03

Admite / Admits			€
39	**AV0054700R**	Azul 1,75l/s / Blue 1,75l/s	1,95

Producto acabado / Finished product		€
11	**A822502850**	-

Sistemas Duplo One /
Duplo One Systems

Duplo WC One Compact

A890073020

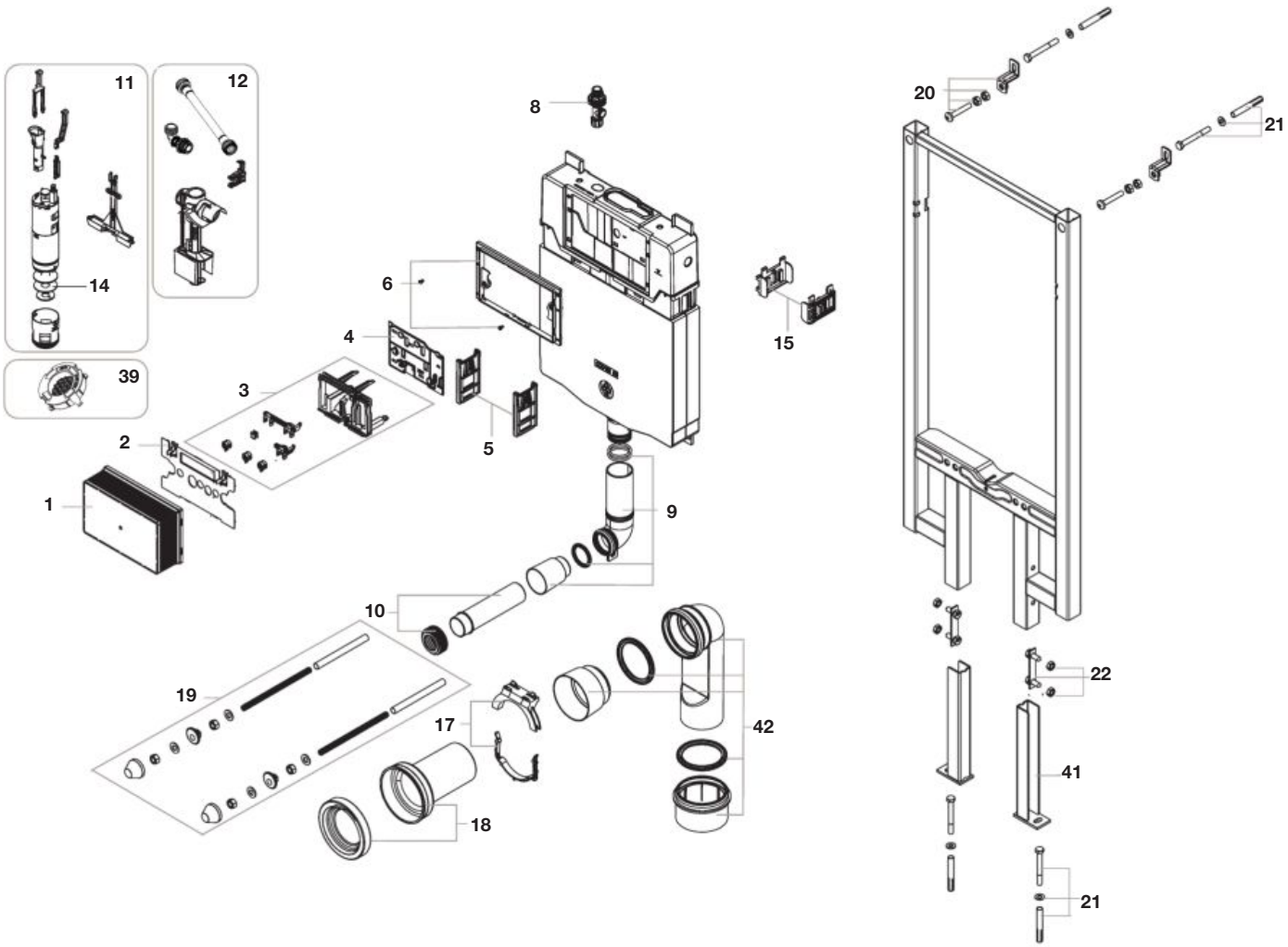

		€
1	**AV0045700R**	7,12
2		
4	**AV0045800R**	12,80
6		
3	**AV0045900R**	9,55
5	**AV0046100R**	2,44
8	**AV0046400R**	32,60
9	**AV0046500R**	12,00
10	**AV0046600R**	4,42
12	**AV0062100R**	33,50
14	**AV0048100R**	5,20
15	**AV0047000R**	2,61

				€
17		**AV0047200R**		3,92
18		**AV0047300R**		18,80
19		**AV0047400R**		10,40
20	2 un	**AV0047500R**		21,50
21	2 un			
21	2 un	**AV0054900R**		51,20
22	2 un			
41	2 un			
39		**AV0054800R**	Gris 2,1l/s / Grey 2,1l/s	2,03
42		**AV0047100R**		43,50

Admite / Admits			€
39	**AV0054700R**	Azul 1,75l/s / Blue 1,75l/s	1,95

Producto acabado / Finished product		€
11	**A822502850**	-

Sistemas Duplo One /
Duplo One Systems

Basic WC One Compact

A890070120

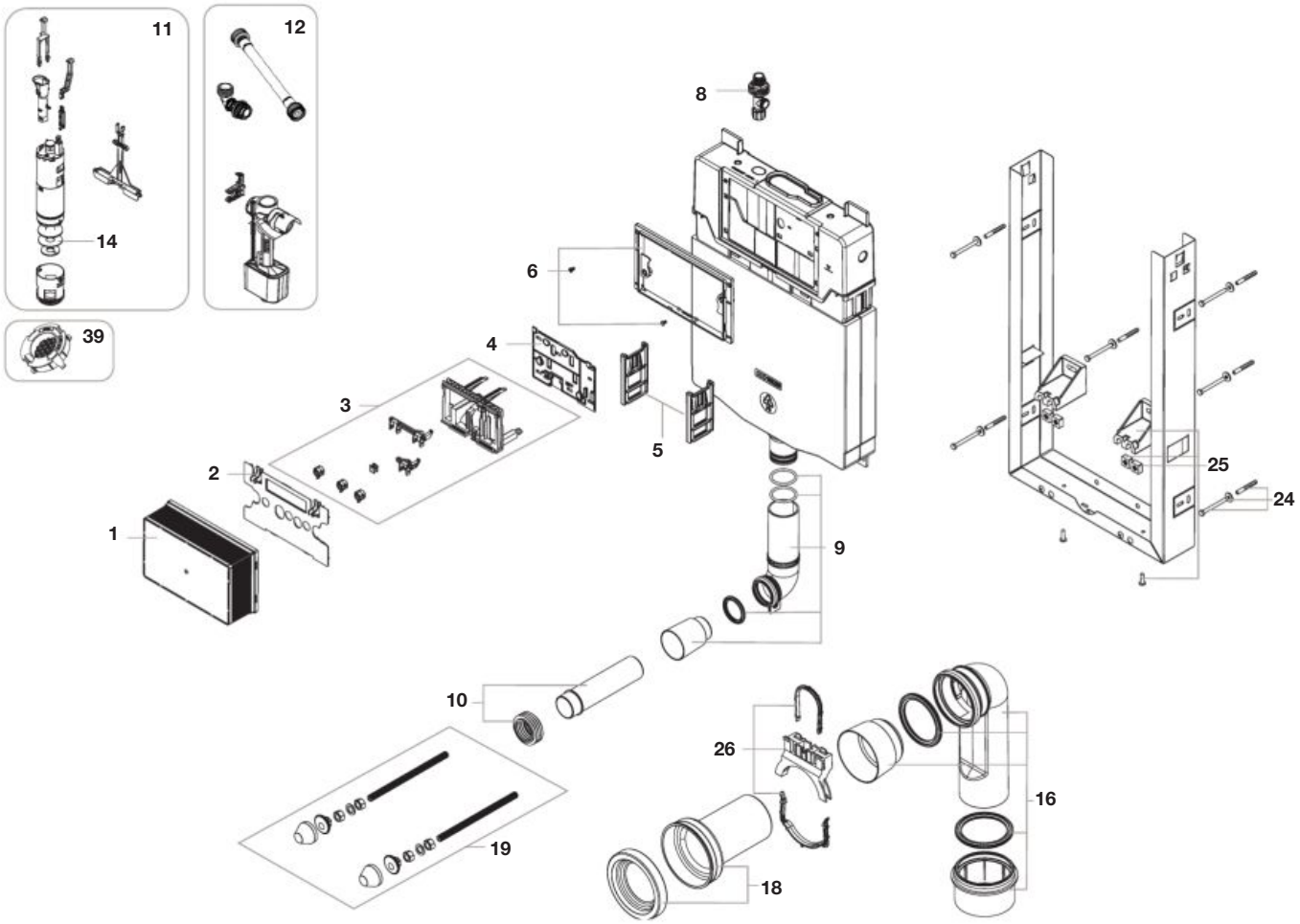

		€
1	**AV0045700R**	7,12
2		
4	**AV0045800R**	12,80
6		
3	**AV0045900R**	9,55
5	**AV0046100R**	2,44
8	**AV0046400R**	32,60
9	**AV0046500R**	12,00
10	**AV0046600R**	4,42

		€
12	**AV0062100R**	33,50
14	**AV0048100R**	5,20
16	**AV0047100R**	43,50
18	**AV0047300R**	18,80
19	**AV0047400R**	10,40
24 6 un	**AV0047900R**	55,30
25 2 un		
26	**AV0048000R**	6,65

			€
39	**AV0054800R**	Gris 2,1l/s / Grey 2,1l/s	2,03

Admite / Admits			€
39	**AV0054700R**	Azul 1,75l/s / Blue 1,75l/s	1,95

Producto acabado / Finished product		€
11	**A822502850**	-

Sistemas Duplo One /
Duplo One Systems

Basic Tank One Compact

A890070200

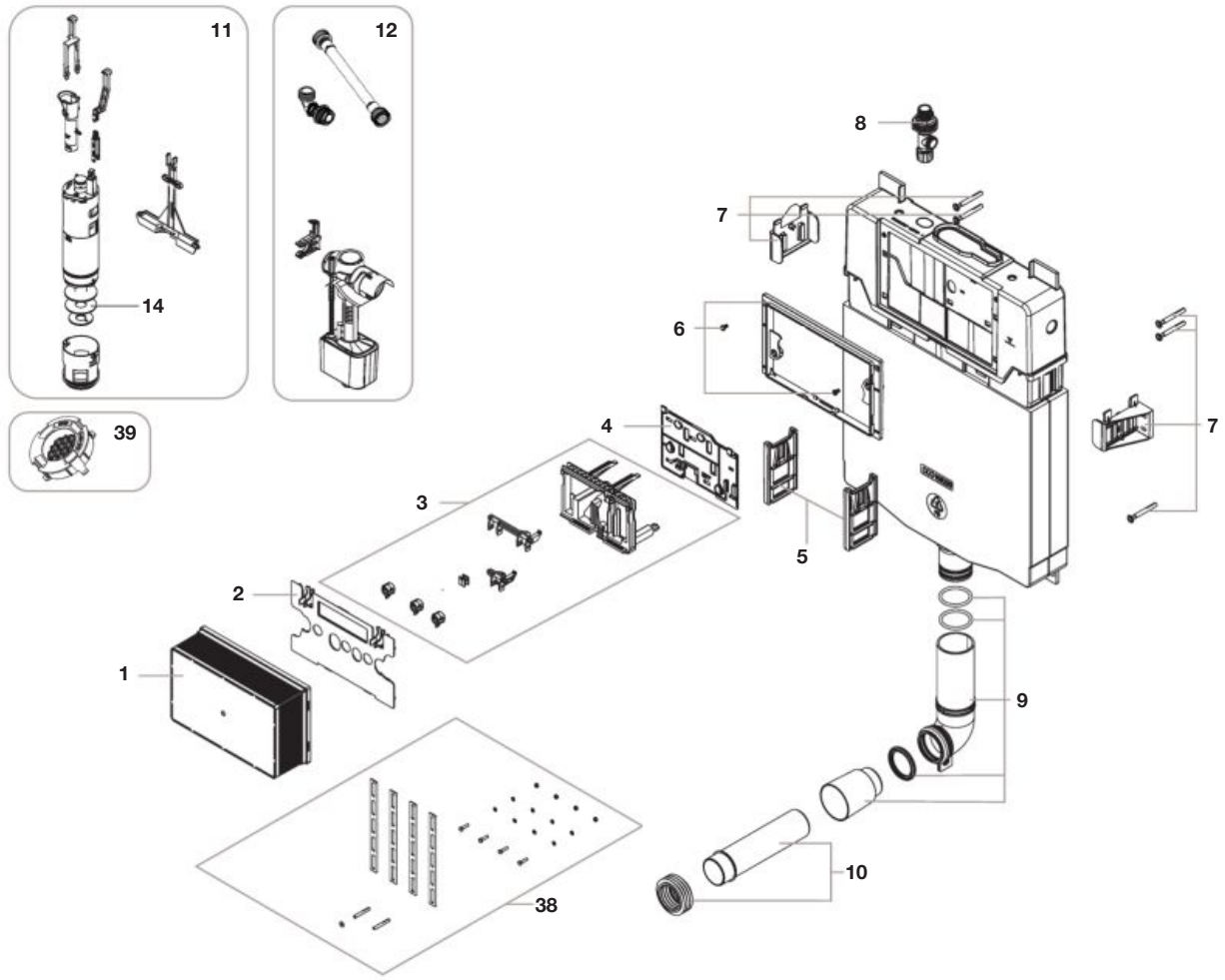

		€
1	**AV0045700R**	7,12
2 4 6	**AV0045800R**	12,80
3	**AV0045900R**	9,55
5	**AV0046100R**	2,44
7	**AV0046300R**	33,50
8	**AV0046400R**	32,60
9	**AV0046500R**	12,00
10	**AV0046600R**	4,42
12	**AV0062100R**	33,50
14	**AV0048100R**	5,20

			€
38	**AV0049300R**		7,55
39	**AV0054800R**	Gris 2,1l/s / Grey 2,1l/s	2,03

Admite / Admits			€
39	**AV0054700R**	Azul 1,75 l/s / Blue 1,75 l/s	1,95

Producto acabado / Finished product		€
11	**A822502850**	-

Sistemas Duplo One /
Duplo One Systems

Duplo WC One Smart

A890078020

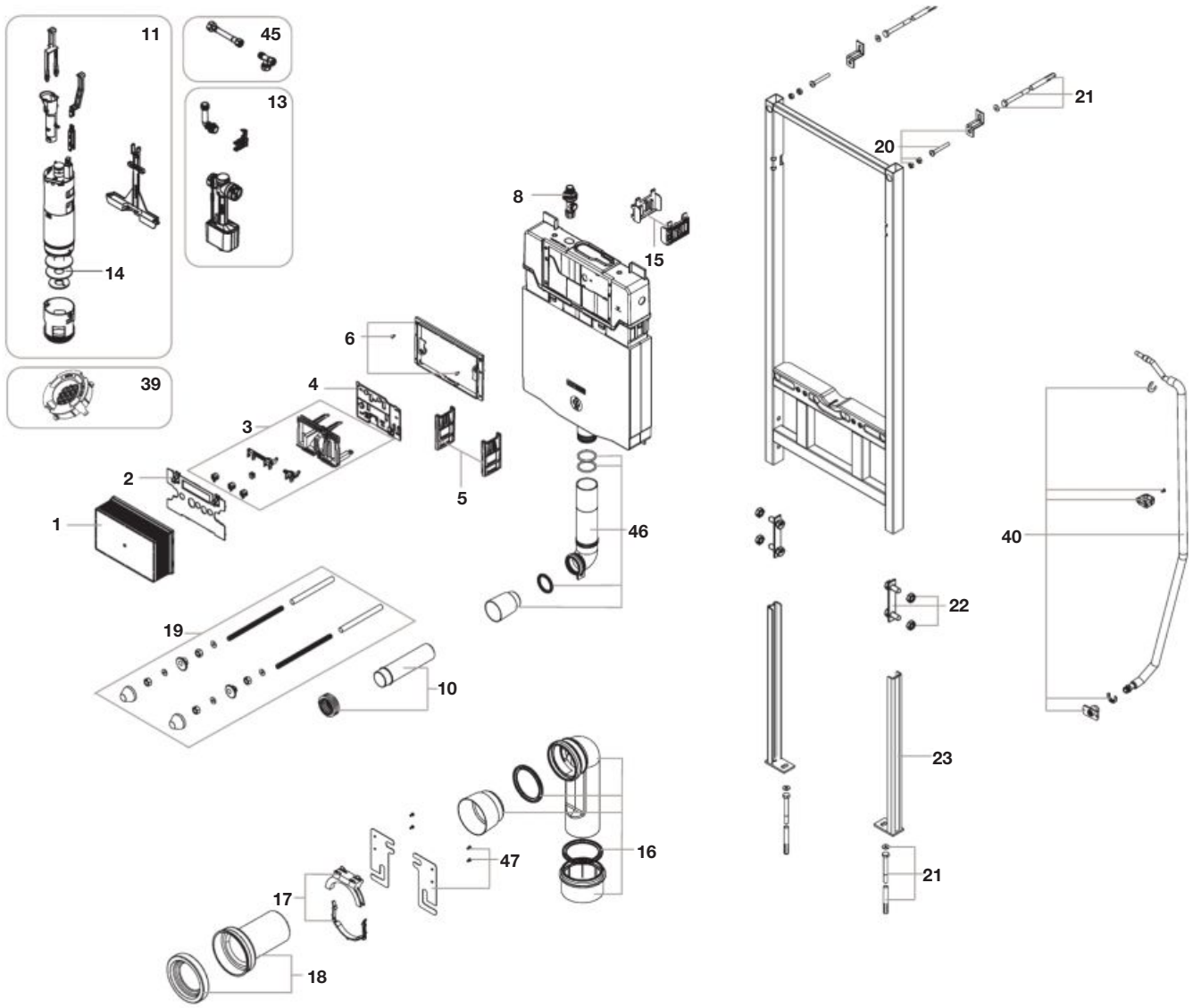

		€
1	**AV0045700R**	7,12
2 4 6	**AV0045800R**	12,80
3	**AV0045900R**	9,55
5	**AV0046100R**	2,44
8 45	**AV0053000R**	106,00
10	**AV0046600R**	4,42
14	**AV0048100R**	5,20
15	**AV0047000R**	2,61
16	**AV0047100R**	43,50

			€
17	**AV0047200R**		3,92
18	**AV0047300R**		18,80
19	**AV0047400R**		10,40
20 2 un 21 2 un	**AV0047500R**		21,50
21 2 un 22 2 un 23 2 un	**AV0047700R**		79,10
39	**AV0054800R**	Gris 2,1l/s / Grey 2,1/s	2,03
40	**AV0055200R**		56,80

		€
46	**AV0052800R**	13,40
47	**AV0046800R**	11,40

Admite / Admits			€
39	**AV0054700R**	Azul 1,75 l/s / Blue 1,75 l/s	1,95

Producto acabado / Finished product		€
11	**A822502850**	-
13	**A822502860**	-

Sistemas Duplo One /
Duplo One Systems

Duplo WC One Freestanding

A890077020

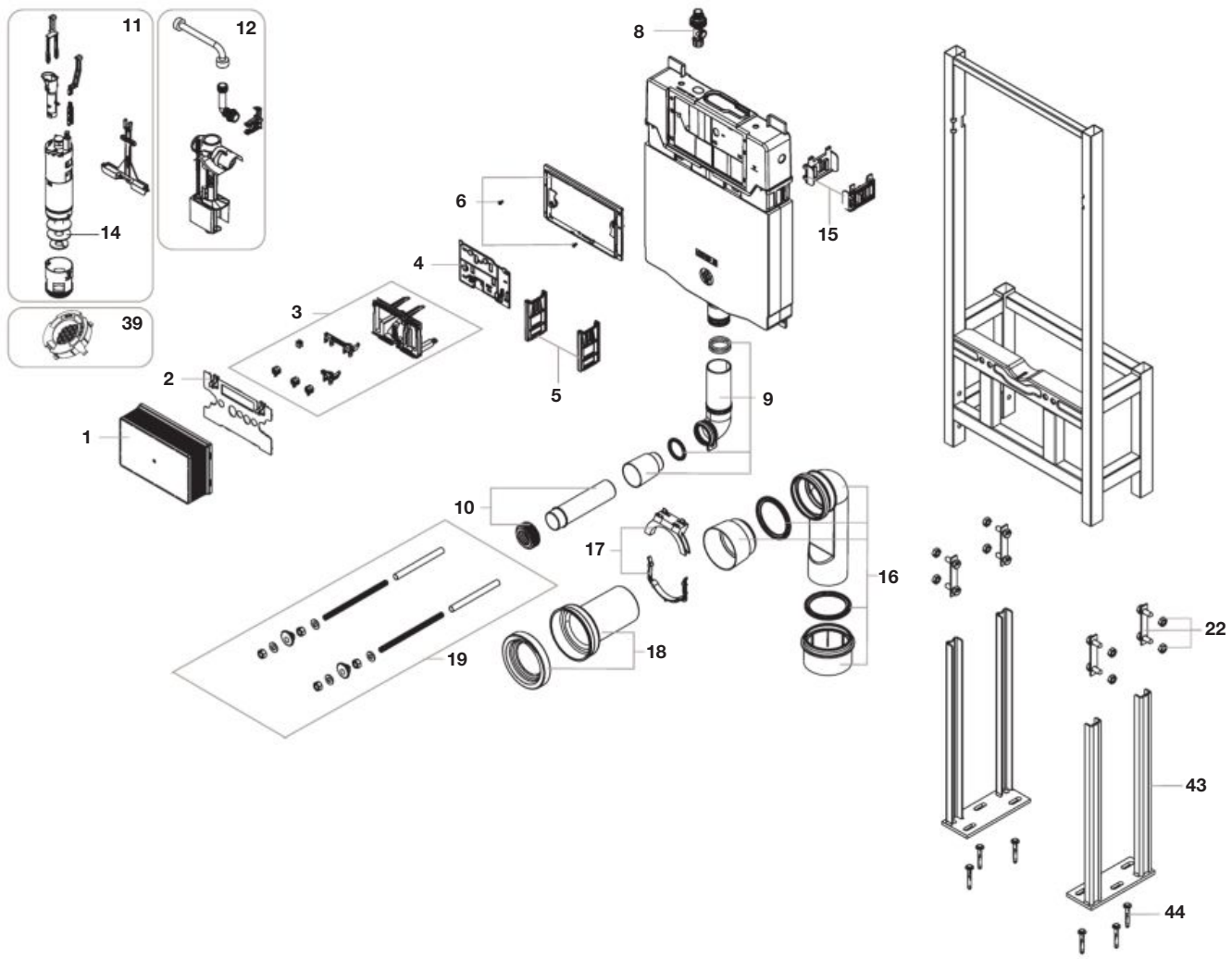

		€
1	**AV0045700R**	7,12
2		
4	**AV0045800R**	12,80
6		
3	**AV0045900R**	9,55
5	**AV0046100R**	2,44
8	**AV0046400R**	32,60
12	**AV0062100R**	33,50
9	**AV0046500R**	12,00
10	**AV0046600R**	4,42
14	**AV0048100R**	5,20
15	**AV0047000R**	2,61

				€
16		**AV0047100R**		43,50
17		**AV0047200R**		3,92
18		**AV0047300R**		18,80
19		**AV0047400R**		10,40
22	4 un			
43	2 un	**AV0055100R**		106,00
44	6 un			
39		**AV0054800R**	Gris 2,1l/s / Grey 2,1/s	2,03

Admite / Admits			€
39	**AV0054700R**	Azul 1,75 l/s / Blue 1,75 l/s	1,95

Producto acabado / Finished product		€
11	**A822502850**	-

Placas de accionamiento One / Plush plates One

Placas de accionamiento mecánico, PL1 Single, PL1 Dual, PL2 Single, PL2 Dual, PL7 Dual, PL10 Dual. / Mechanical plush plates, PL1 Single, PL1 Dual, PL2 Single, PL2 Dual, PL7 Dual, PL10 Dual.

PL1 Single	PL2 Single	PL7 Dual	PL10 Dual	
A890195100	**A890196100**	**A890188206**	**A890189000**	**A890189304**
PL1 Dual	**PL2 Dual**	**A890188207**	**A890189001**	**A8901890CN**
A890195000	**A890196000**	**A890188308**	**A890189002**	**A8901890RG**
A890195001	**A890196001**	**A890188309**	**A890189005**	**A8901890NM**
A890195002	**A890196002**		**A890189206**	**A8901890VA**
A890195005	**A890196005**		**A890189207**	
			A89018920M	
			A89018920B	
			A89018920P	
			A890189264	
			A890189308	
			A890189309	

			€
27		**AV0048700R**	5,20
28	2 un	**AV0046700R**	3,62
39	3 un		

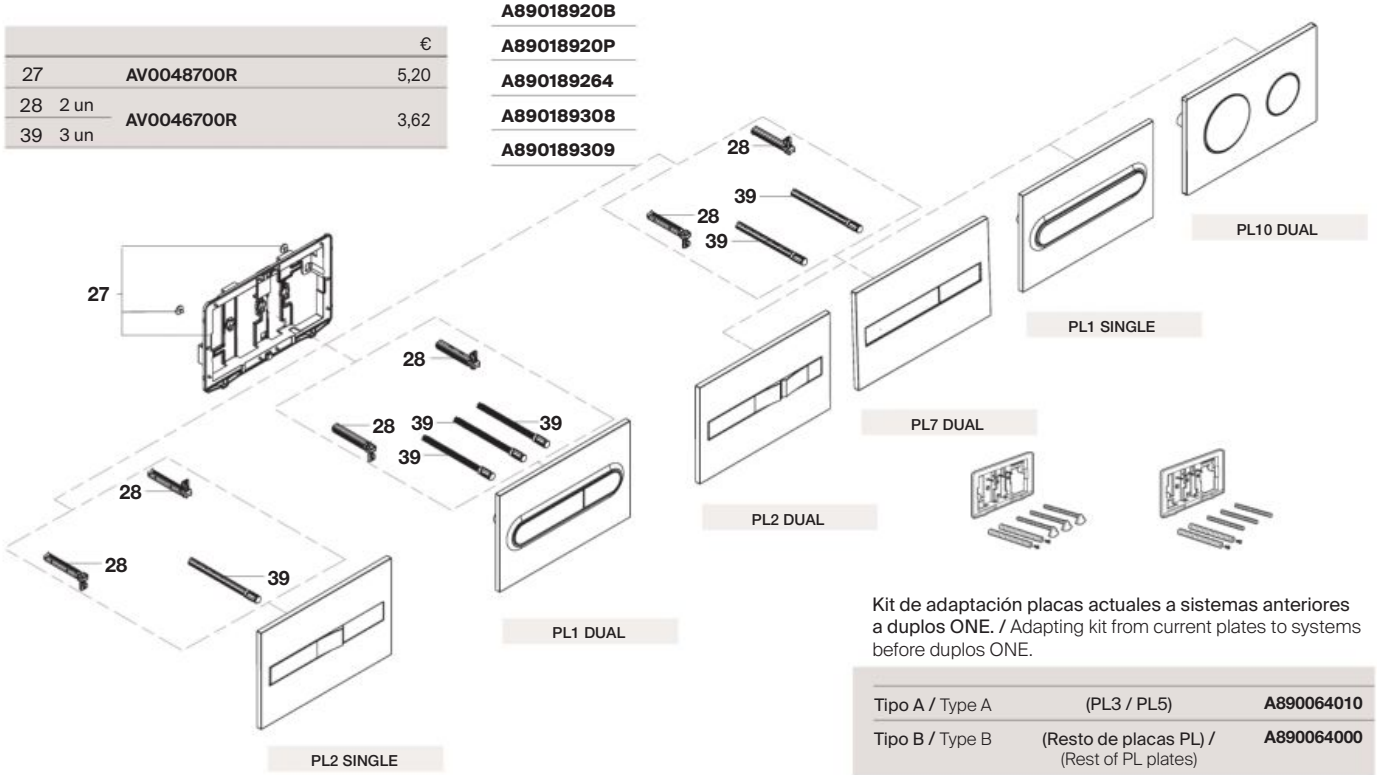

Kit de adaptación placas actuales a sistemas anteriores a duplos ONE. / Adapting kit from current plates to systems before duplos ONE.

Tipo A / Type A	(PL3 / PL5)	**A890064010**
Tipo B / Type B	(Resto de placas PL) / (Rest of PL plates)	**A890064000**

Placas accionamiento mecánico, PL4 Dual, PL5 Dual, PL6 Dual. / Mechanical plush plates, PL4 Dual, PL5 Dual, PL6 Dual.

PL4 Dual	PL6 Dual
A890198000	**A890185000**
A890198001	**A890185001**
A890198002	**A890185002**
A890198005	**A890185005**

PL5 Dual
A890199000
A890199001
A890199002
A890199005

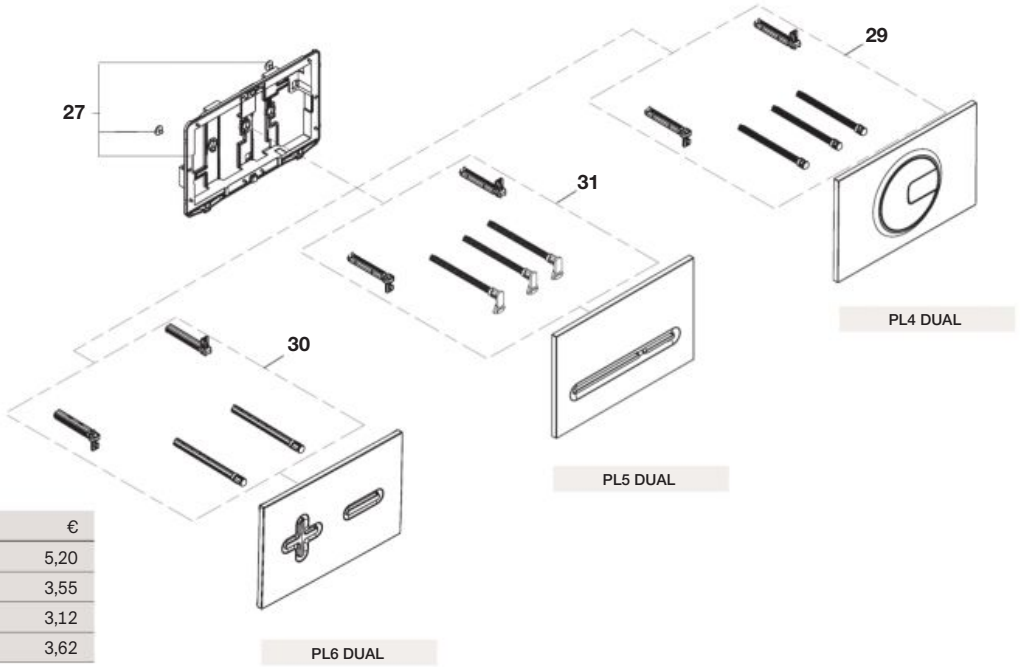

			€
27		**AV0048700R**	5,20
29		**AV0046900R**	3,55
30		**AV0048400R**	3,12
31		**AV0048600R**	3,62

Placas de accionamiento One /
Plush plates One

Placas de accionamiento mecánico, PL3 PRO antivandáliça. /
Mechanical plush plates, PL3 PRO antivandal.

PL3 Single	PL3 Dual
A890197104	**A890197004**

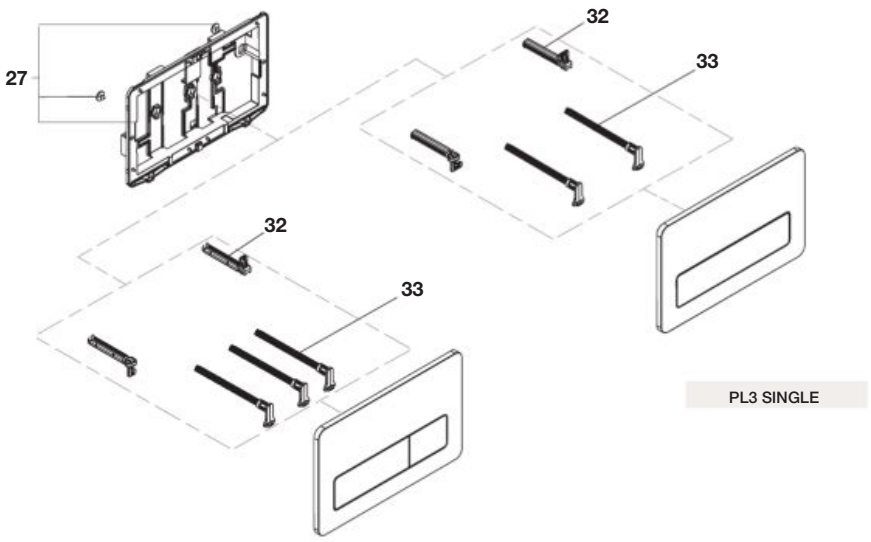

PL3 SINGLE

PL3 DUAL

			€
27		**AV0048700R**	5,20
32	2 un	**AV0048500R**	3,62
33	3 un		

Placas de accionamiento mecánico, PL3-E PRO, EP-1, EP-2. /
Mechanical plush plates, PL3-E PRO, EP-1, EP-2.

PL3-E PRO	EP-1	EP-2
A890097500	**A890104008**	**A890104009**

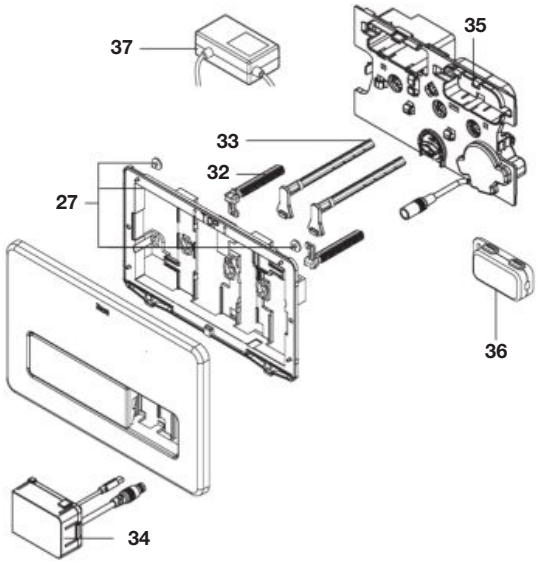

PL3-E PRO

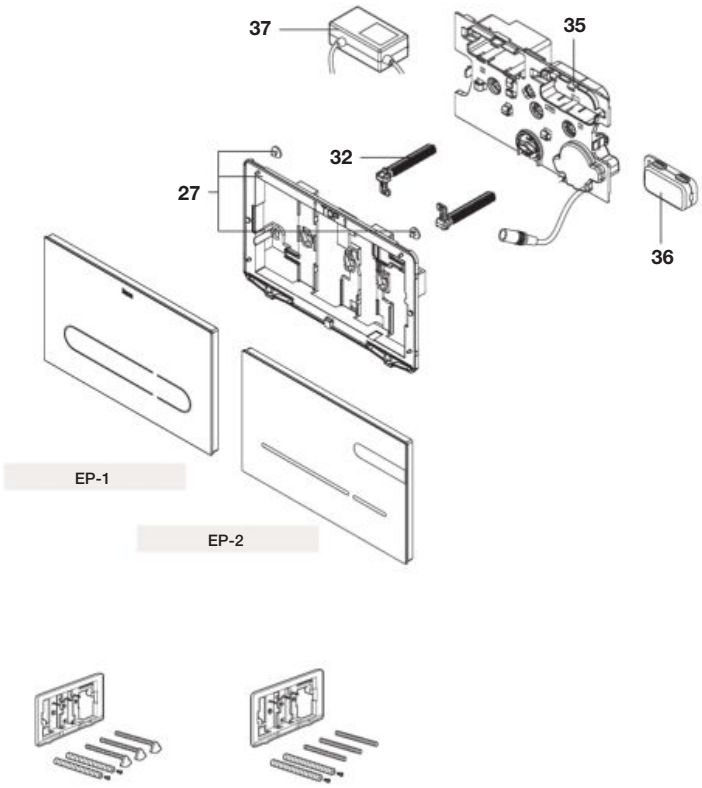

EP-1

EP-2

			€
27		**AV0048700R**	5,20
32	2 un	**AV0048500R**	3,62
33	3 un		
34		**AV0033500R**	215,00
35		**AV0049600R**	151,00
36		**AG0103407R**	10,60
37		**AV0035000R**	91,50

Kit de adaptación placas actuales a sistemas anteriores a duplos ONE. / Adapting kit from current plates to systems before duplos ONE.

Tipo A / Type A	(PL3 / PL5)	**A890064010**
Tipo B / Type B	(Resto de placas PL) / (Rest of PL plates)	**A890064000**

Placas de accionamiento One /
Plush plates One

Placas de accionamiento electrónicas, EP-3. /
Electronic plush plates, EP-3.

EP-3
A890104319
A890104318
A890104363
A890104364
A890104365
A890104366

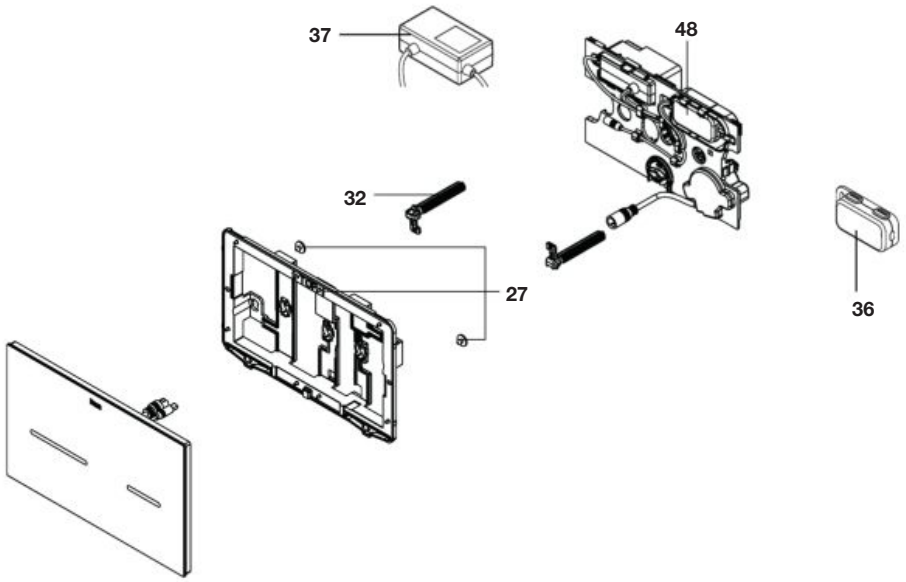

			€
27		**AV0048700R**	5,20
32	2 un	**AV0048500R**	3,62
36		**AG0103407R**	10,60
37		**AV0035000R**	91,50
48		**AV0062200R**	122,00

Placas de accionamiento electrónicas, PL10-E PRO, PL10-E, PL10-E IOT, PL10-E PRO IOT. /
Electronic plush plates, PL10-E PRO, PL10-E, PL10-E IOT, PL10-E PRO IOT.

PL10-E PRO	PL10-E	PL10-E IoT	PL10-E PRO IoT
A890189500	A890189510	A890189520	A890189530

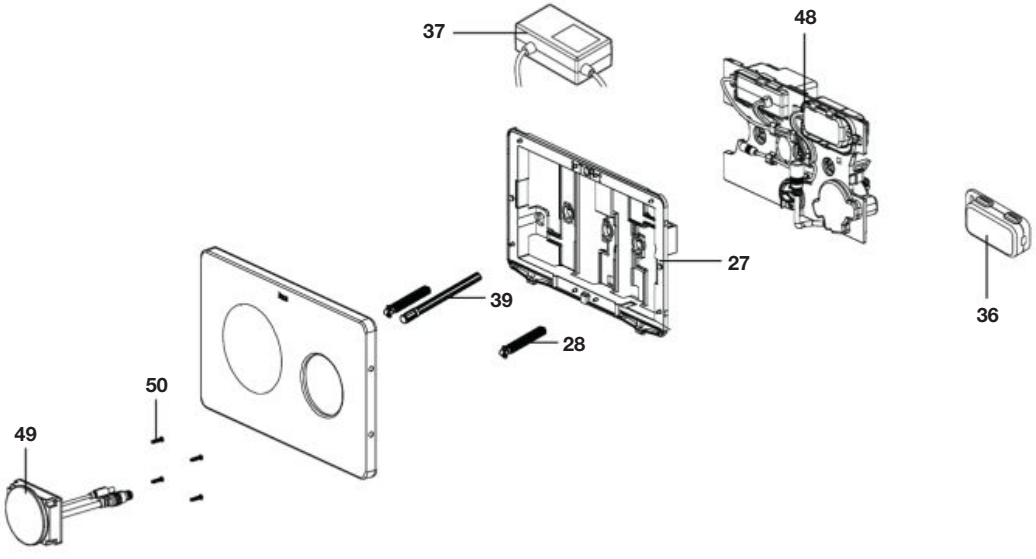

				€
27		**AV0048700R**		5,20
28	2 un	**AV0046700R**		3,62
39	3 un			
36		**AG0103407R**		10,60
37		**AV0035000R**		91,50
48		**AV0062200R**		122,00
49		**AV0059700R**		150,00
50	4 un			
49		**AV0067000R**	IoT	297,00
50	4 un			

Sistemas Duplo S /
Duplo S Systems

Duplo WC S Compact

A8900A0020

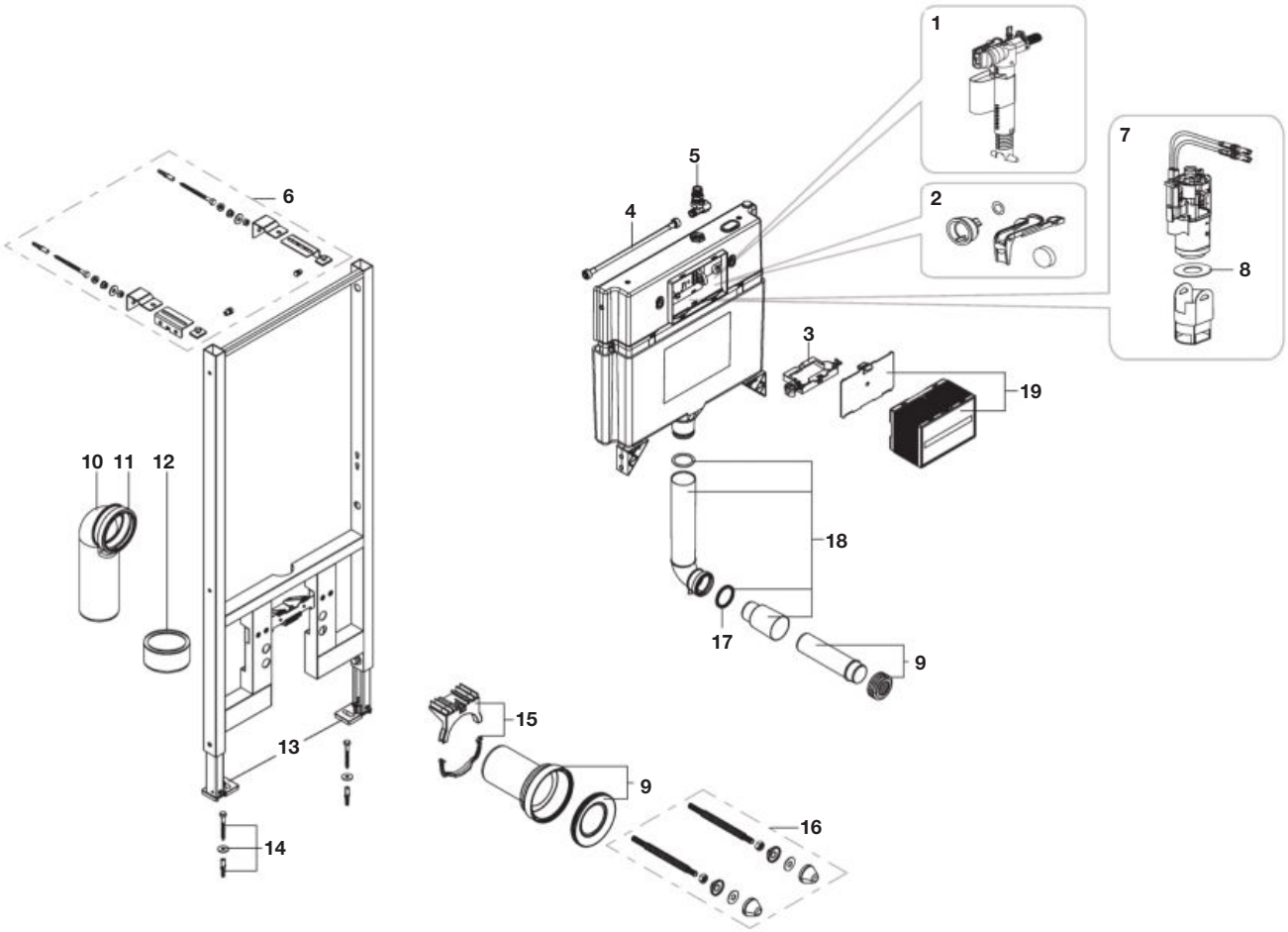

		€
1	**AV0066300R**	28,70
2	**VS03345C000000**	10,50
3	**VS04224C000000**	5,97
4	**AV0066400R**	12,90
5	**VS05173C000000**	17,30
6	**VS17293C000000**	32,10
7	**AV0066500R**	45,70
8	**AV0066600R**	4,61
9	**AV0012400R**	34,80
10	**VS58904C000000**	11,40

			€
11		**VS04131C000000**	3,26
12		**VS58211C000000**	6,13
13		**VS05343C000000**	14,40
14	2 un	**AV0001900R**	11,90
15		**VS04353C000000**	11,10
16		**AV0047400R**	10,40
17		**VS02424C000000**	1,44
18		**VS05052C000000**	11,50
19		**VS05244C00S000**	36,20

Sistemas Duplo S /
Duplo S Systems

Duplo WC S Compact Smart

A8900A8020

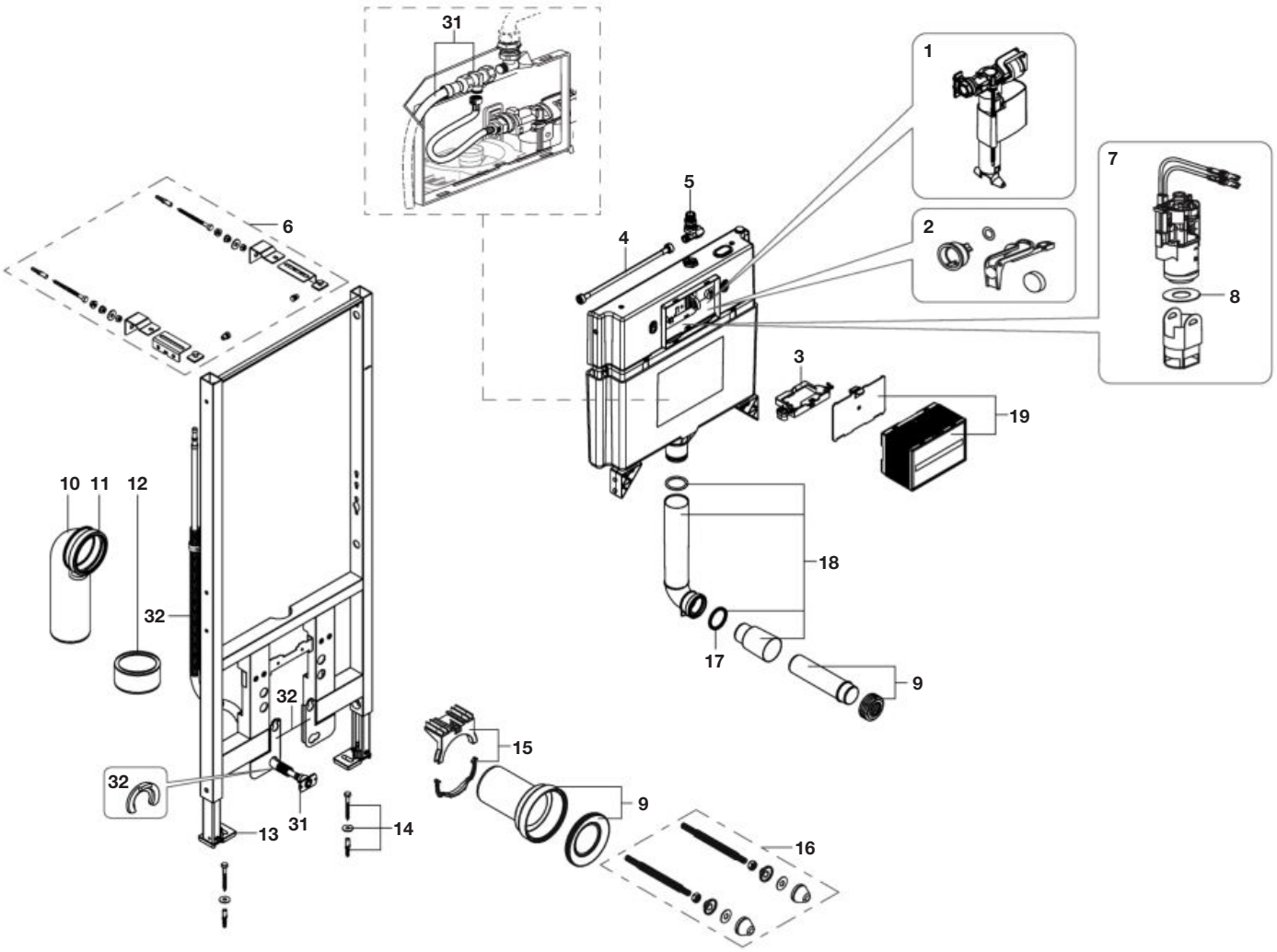

		€
1	**AV0066300R**	28,70
2	**VS03345C000000**	10,50
3	**VS04224C000000**	5,97
4	**AV0066400R**	12,90
5	**VS05173C000000**	17,30
6	**VS17293C000000**	32,10
7	**AV0066500R**	45,70

			€
8		**AV0066600R**	4,61
9		**AV0012400R**	34,80
10		**VS58904C000000**	11,40
11		**VS04131C000000**	3,26
12		**VS58211C000000**	6,13
13	2 un	**VS05343C000000**	14,40
14	2 un	**AV0001900R**	11,90

		€
15	**VS04353C000000**	11,10
16	**AV0047400R**	10,40
17	**VS02424C000000**	1,44
18	**VS05052C000000**	11,50
19	**VS05244C00S000**	36,20
31	**VS05435C000000**	-
32	**VS05432C000000**	-

Sistemas Duplo S /
Duplo S Systems

Duplo WC S

Duplo WC S	
A8900A912E	
A8900A91A0	UK

Duplo WC S Access	
A8900A90DE	

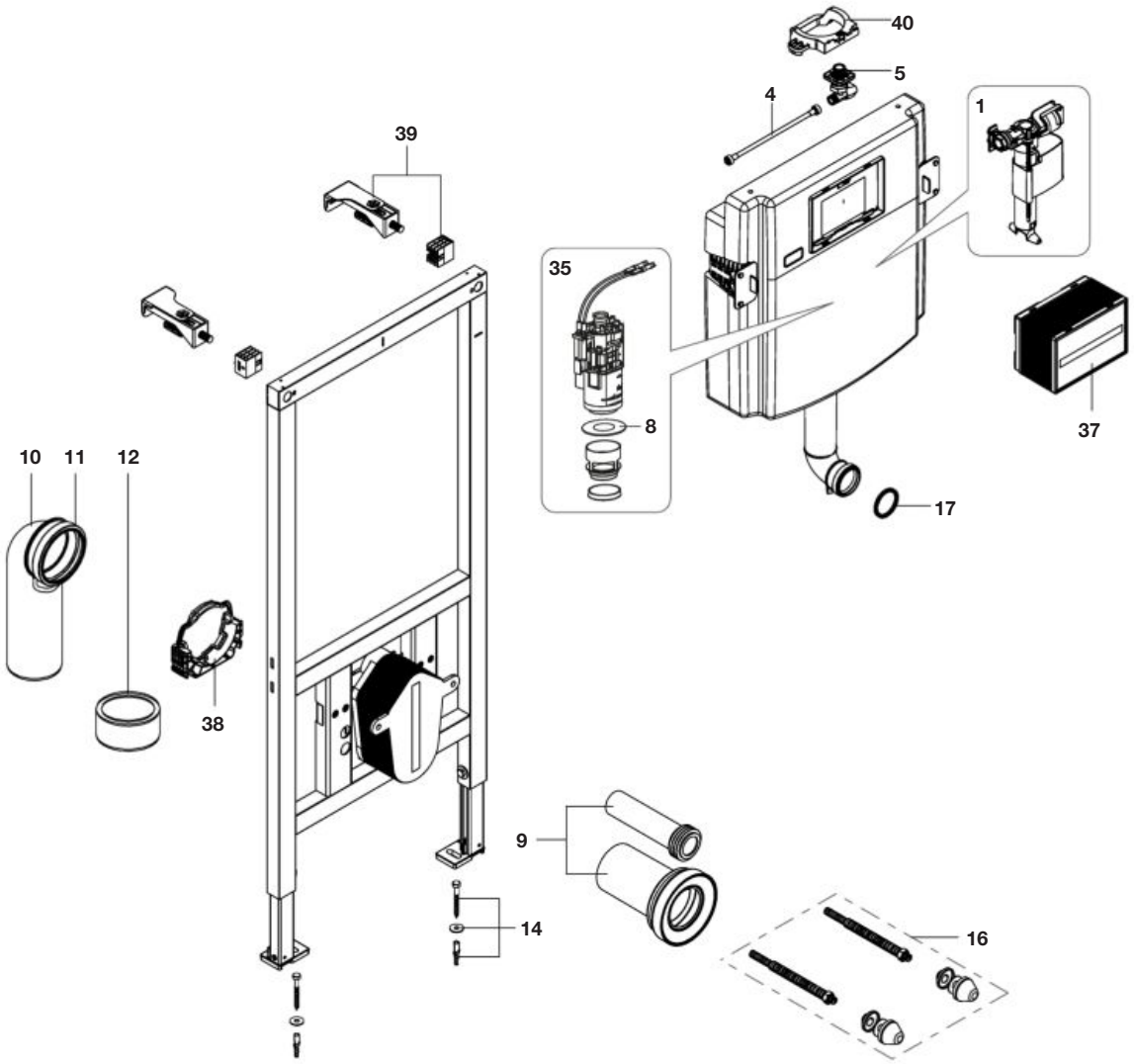

			€
1	**AV0066300R**		28,70
1	**VS25012C000000**	UK	49,80
4	**AV0066400R**		12,90
5	**VS05173C000000**		17,30
8	**AV0066600R**		4,61
9	**AV0012400R**		34,80
10	**VS58904C000000**		11,40
11	**VS04131C000000**		3,26
12	**VS58211C000000**		6,13

			€
14	2 un	**AV0001900R**	11,90
16		**AV0047400R**	10,40
17		**VS02424C000000**	1,44
35		**VS03982C000000**	32,70
37		**VS16030C000000**	12,30
38		**VS05342C000000**	9,08
39	2 un	**VS05420C000001**	-
40		**AV0027600R**	33,50

Sistemas Duplo S /
Duplo S Systems

Basic Tank S

Basic Tank S "LH"	
A8900A22A1	UK

Basic Tank S "L"	
A8900A2200	
A8900A22A0	UK

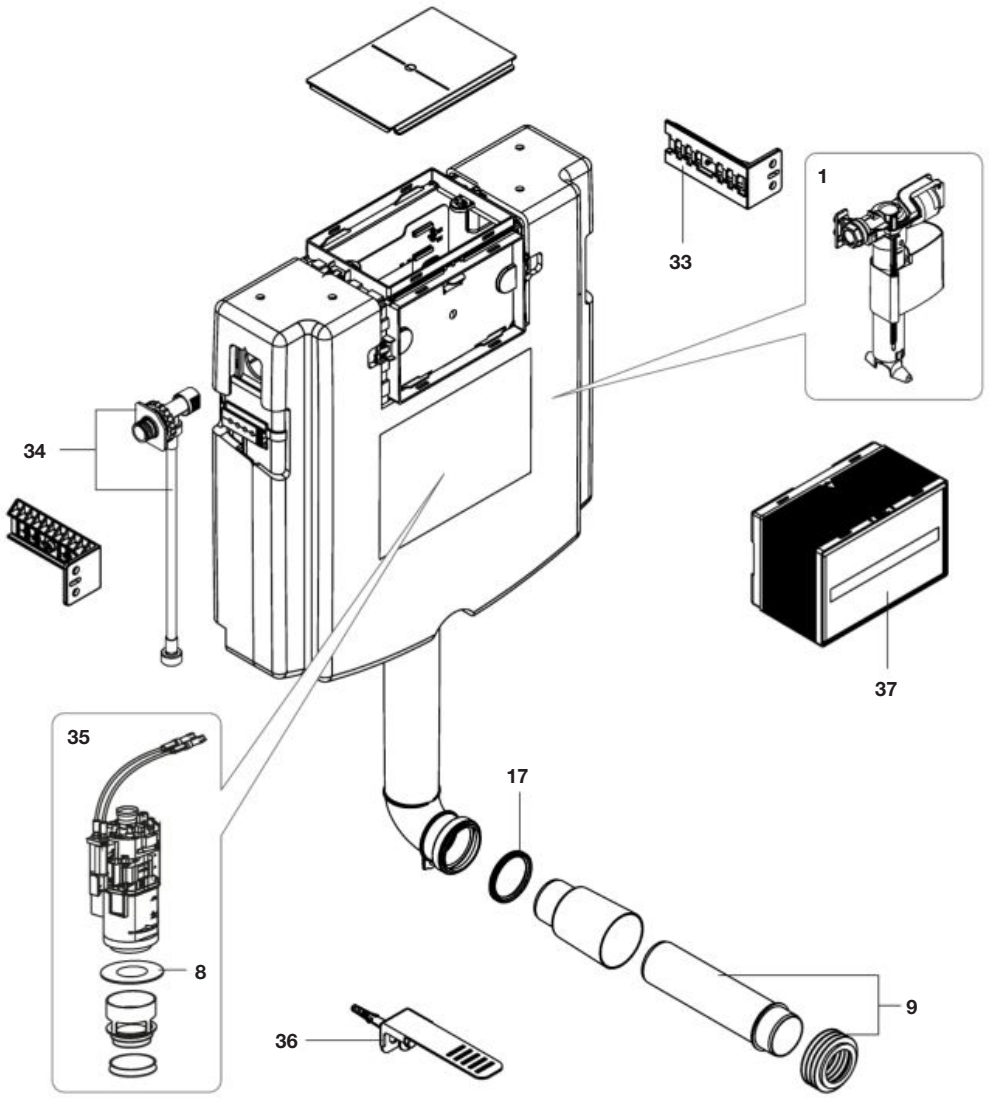

				€
1		**AV0066300R**		28,70
1		**VS25012C000000**	UK	49,80
8		**AV0066600R**		4,61
9		**AV0012400R**		34,80
17		**VS02424C000000**		1,44
33	2 un	**VS05477C000000**		23,60
34		**VS05061C000000**		29,20
35		**VS03982C000000**		32,70
36		**VS04386C000000**	LH	15,90
37		**VS16030C000000**		12,30

Sistemas Duplo S /
Duplo S Systems

Duplo WC S “L”

A8900A2020	
A8900A20A0	UK

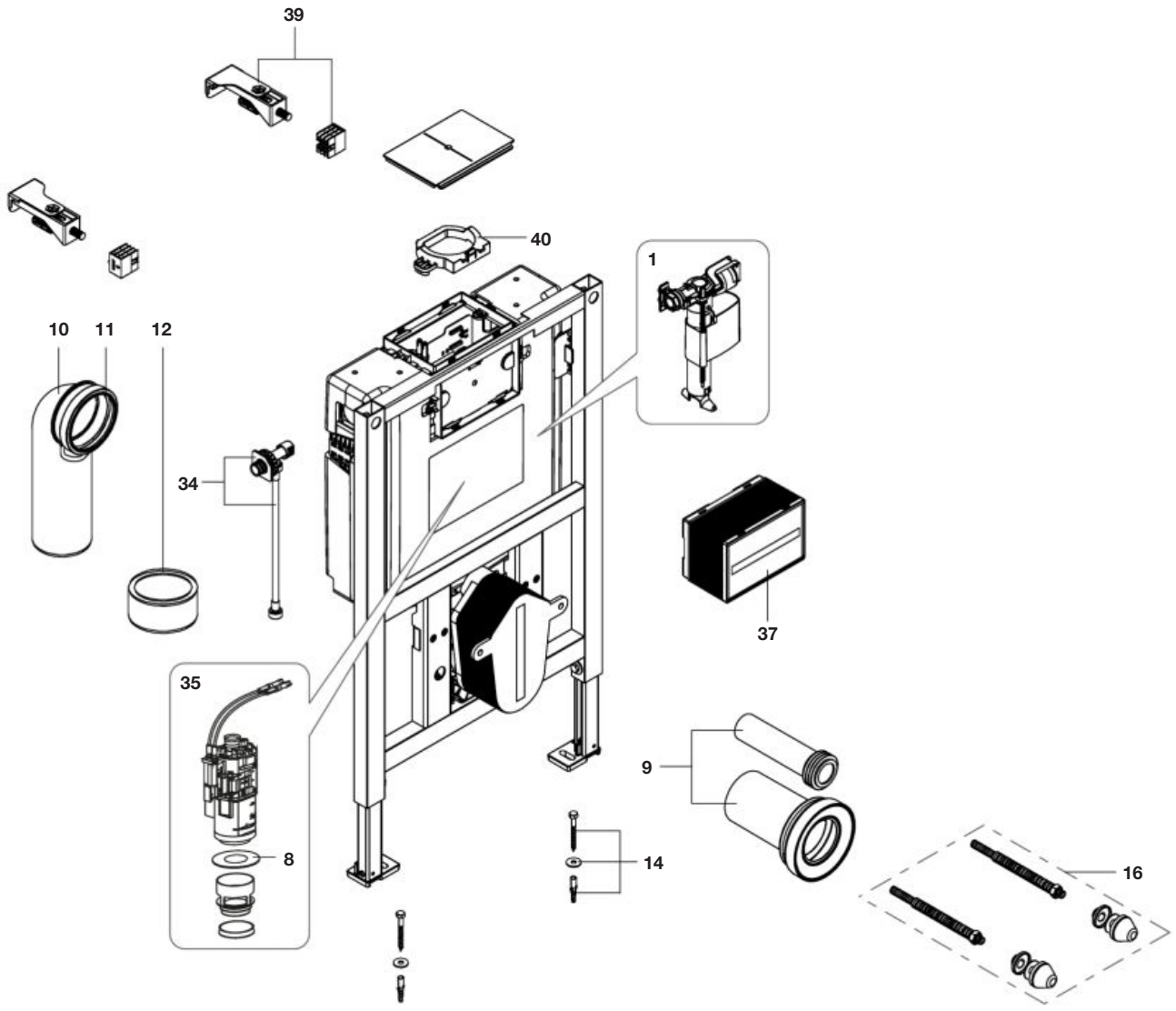

				€
1		**AV0066300R**		28,70
1		**VS25012C000000**	UK	49,80
8		**AV0066600R**		4,61
9		**AV0012400R**		34,80
10		**VS58904C000000**		11,40
11		**VS04131C000000**		3,26
12		**VS58211C000000**		6,13
14	2 un	**AV0001900R**		11,90
16		**AV0047400R**		10,40
35		**VS03982C000000**		32,70
37		**VS16030C000000**		12,30
39	2 un	**VS05420C000001**		-
40		**AV0027600R**		33,50

Sistemas Duplo S /
Duplo S Systems

Duplo S

DUPLO S URINAL + FLUXOR Duplo S Urinal + Flux	
A8900F4200	

DUPLO S URINAL Duplo S Urinal	
A8900F4100	

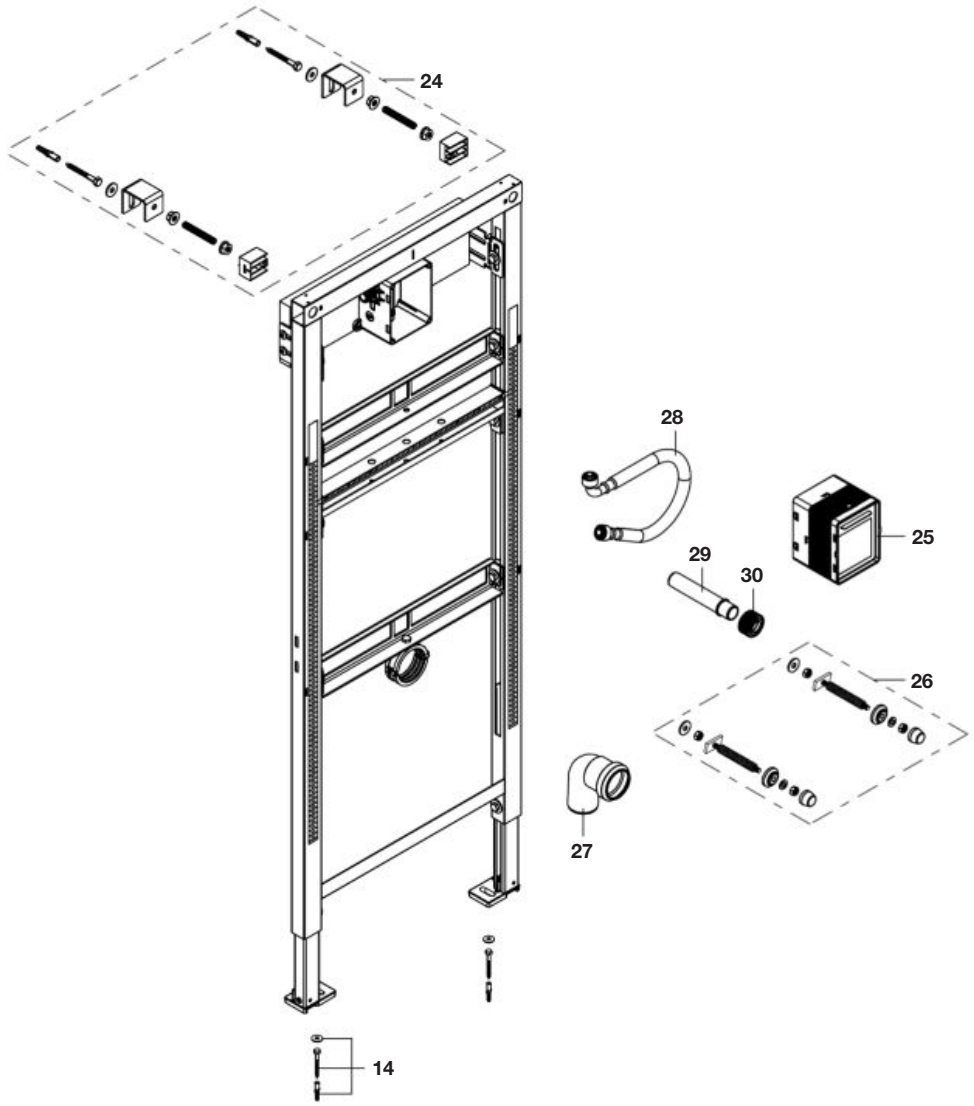

				€
14	2 un	**AV0001900R**		11,90
24		**VS05433C000000**		-
25		**VS05026C000000**	Fluxor	11,20
26		**AV0002500R**		21,30
27		**VS04162C000000**		-
28		**VS05029C000000**		10,20
29		**VS05028C000000**		2,97
30		**VS04247C000000**		3,06

Sistemas Duplo S /
Duplo S Systems

Duplo S Bidé

DUPLO S BIDÉ Duplo S Bidet	
A8900F1200	

DUPLO S BIDÉ 82 Duplo S Bidet 82	
A8900F1201	

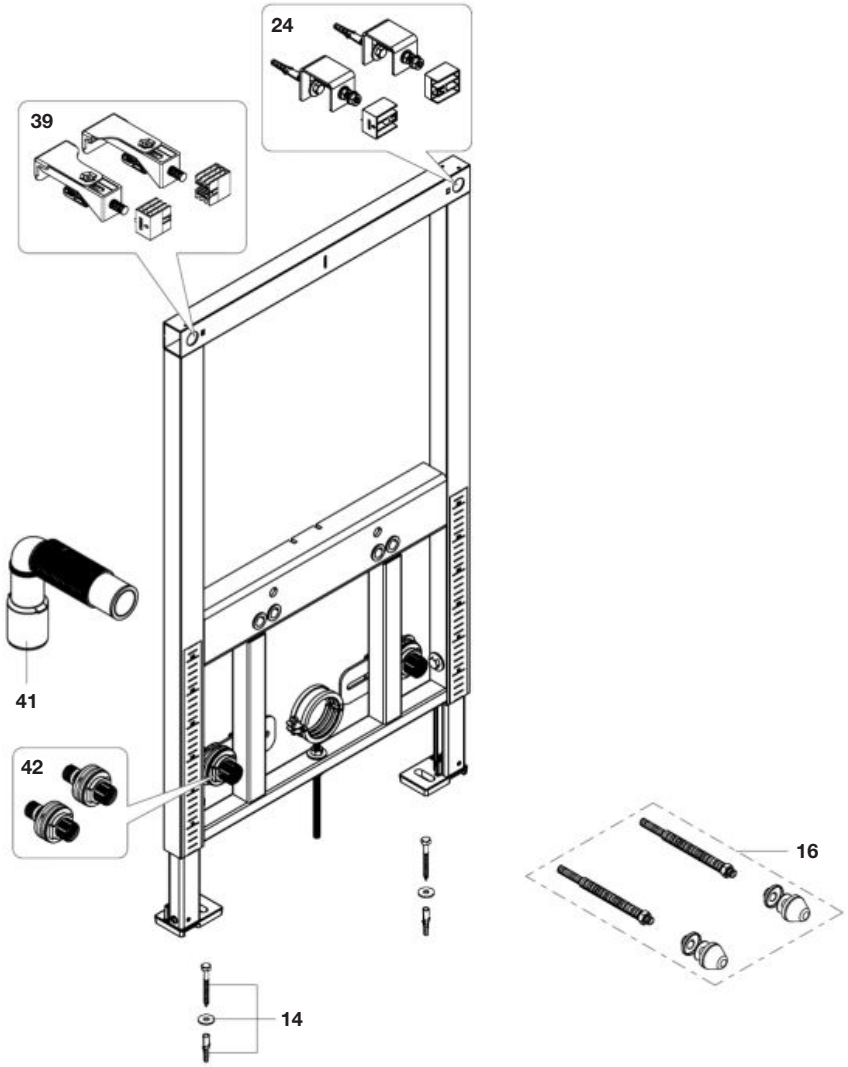

				€
14	2 un	**AV0001900R**		11,90
16		**AV0047400R**		10,40
24		**VS05433C000000**		-
39		**VS05420C000001**	82	-
41		**AV0002600R**		23,30
42		**AV0002100R**		39,50

Sistemas Duplo S /
Duplo S Systems

Duplo S Lavabo / Duplo S Washbasin

A8900F3000

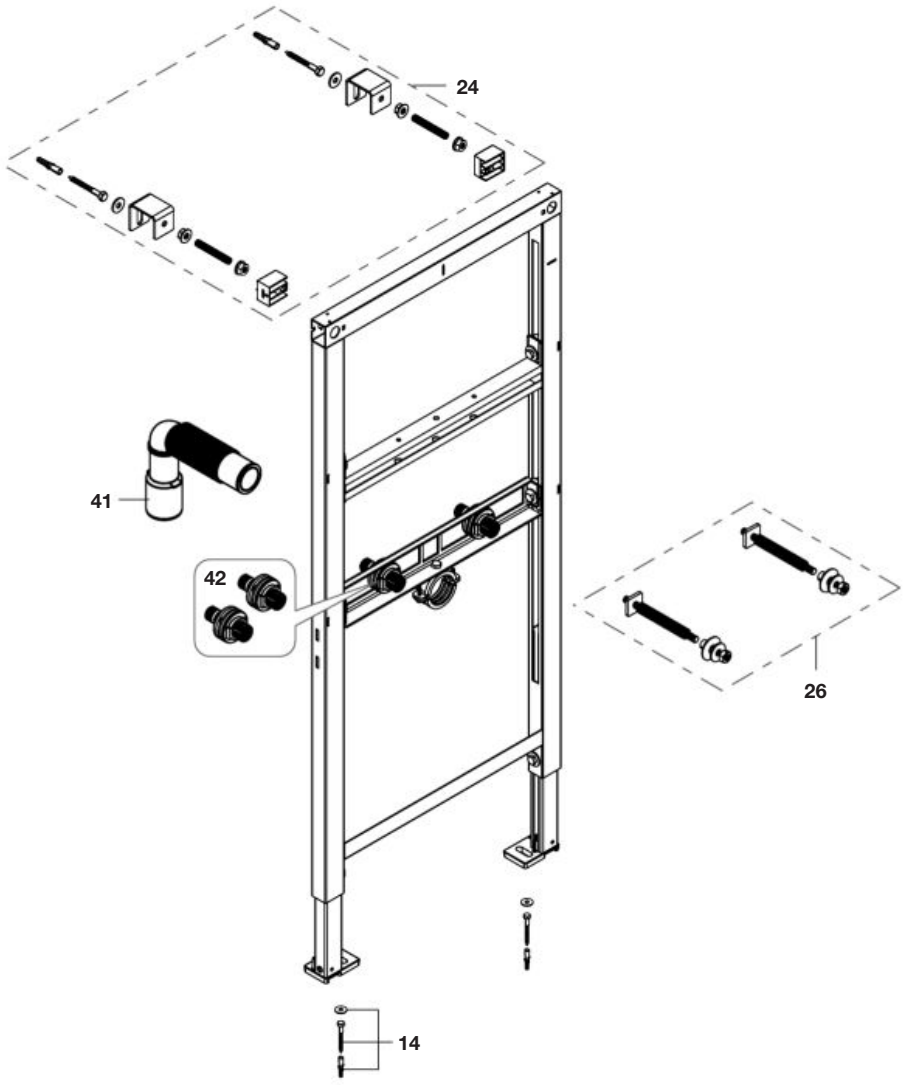

			€
14	2 un	**AV0001900R**	11,90
24		**VS05433C000000**	-
26		**AV0002500R**	21,30
41		**AV0002600R**	23,30
42		**AV0002100R**	39,50

Sistemas Duplo S /
Duplo S Systems

Duplo S Lavabo “HS” / Duplo S Washbasin “HS”

A8900F3001

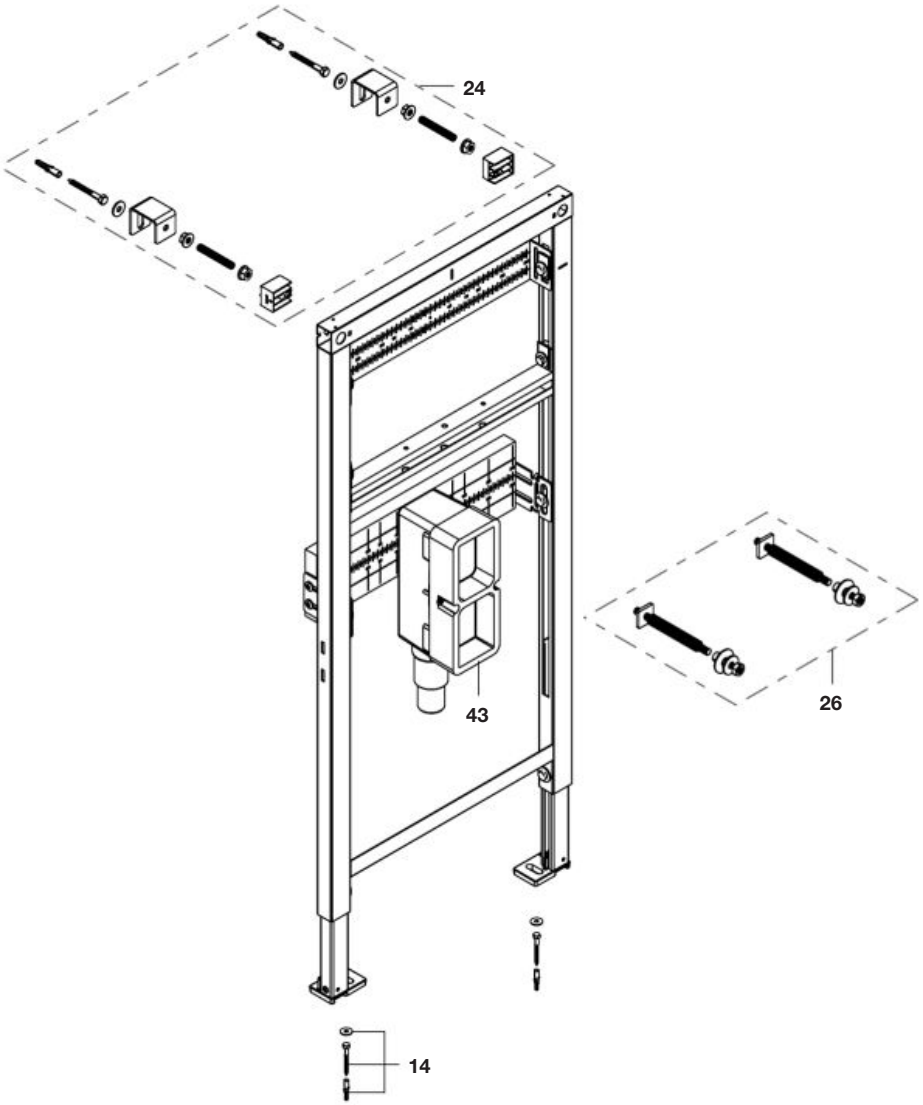

			€
14	2 un	**AV0001900R**	11,90
24		**VS05433C000000**	-
26		**AV0002500R**	21,30
43		**VS31608C000000**	12,80

Placas de accionamiento Duplo S / Plush Plates Duplo S

Placas PS1, PS2, PS5 / Plates PS1, PS2, PS5

PS1 Dual PS1 Dual	**PS2 Dual** PS2 Dual	**Accesorio Placa Enrasada** Flat Accessory PS	**PS5 Dual** PS5 Dual
A8902253..	**A8902243..**	**A8906A0000 PS2**	**A8902223..**

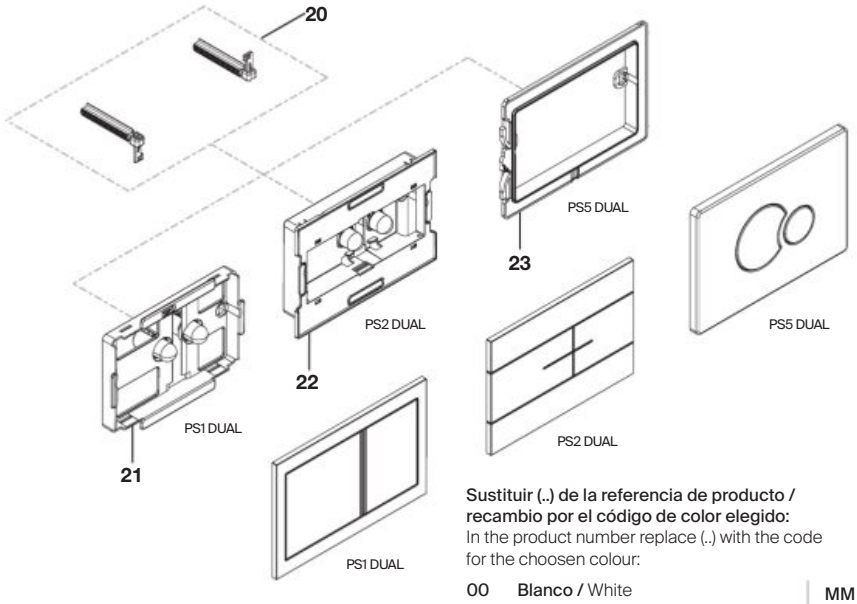

		€
20	**AV0066700R**	3,40
21	**VS04357C000000**	4,38
22	**VS05434C000000**	22,00
23	**VS04360C000000**	13,40

Sustituir (..) de la referencia de producto / recambio por el código de color elegido:
In the product number replace (..) with the code for the choosen colour:

00	**Blanco /** White
01	**Cromado /** Chrome
04	**Acero inox./** Brushed Inox.
06	**Negro mate/** Matt Black
07	**Blanco mate/** Matt White
88	**Cristal negro /** Black Glass
99	**Cristal blanco /** White Glass
AA	**Cristal antracita /** Anthracite Glass
CC	**Hormigón /** Concrete
DD	**Porcelana blanca /** White Ceramic
EE	**Porcelana negra /** Black Ceramic
MM	**Marmol /** Marble
OO	**Roble /** Oak
SS	**Pizarra /** Slate
P0	**Azul nu /** Nu Blue
P1	**Amarillo Nu /** Nu Yellow
P2	**Verde Nu/** Nu Green
CN	**Negro titanio /** Titanium Black
RG	**Oro rosado /** Rose Gold
VA	**Oro cepillado /** Brushed Brass
NM	**Negro titanio cepillado /** Brushed Titanium Black

Placas PS3, PS4, Accesorio Placa Enrasada, Panel Frontal, Pulsadores / Plates PS3, PS4, Flat Accessory PS Frontal panel, Buttons

PS3 Dual PS3 Dual	**Accesorio Placa Enrasada** Flat Accessory PS	**PS4 Single** PS4 Single	**PS4 Dual** PS4 Dual	**Panel frontal** Frontal panel	**Pulsadores** Buttons
A8902233..	**A8906A0000 PS3**	**A8902212..**	**A8902213..**	**A8905233.. PS3**	**A8904233.. PS3**
				A8905213.. PS4	**A8904213.. PS4**

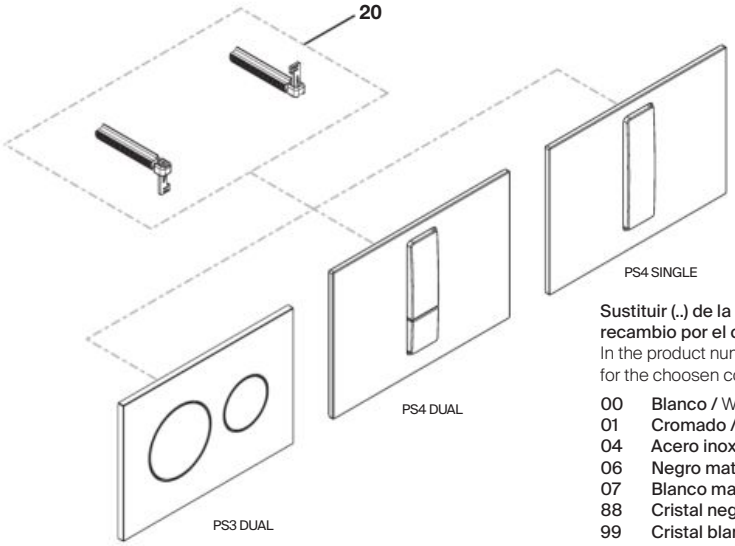

		€
20	**AV0066700R**	3,40

Sustituir (..) de la referencia de producto / recambio por el código de color elegido:
In the product number replace (..) with the code for the choosen colour:

00	**Blanco /** White
01	**Cromado /** Chrome
04	**Acero inox./** Brushed Inox.
06	**Negro mate/** Matt Black
07	**Blanco mate/** Matt White
88	**Cristal negro /** Black Glass
99	**Cristal blanco /** White Glass
AA	**Cristal antracita /** Anthracite Glass
CC	**Hormigón /** Concrete
DD	**Porcelana blanca /** White Ceramic
EE	**Porcelana negra /** Black Ceramic
MM	**Marmol /** Marble
OO	**Roble /** Oak
SS	**Pizarra /** Slate
P0	**Azul nu /** Nu Blue
P1	**Amarillo Nu /** Nu Yellow
P2	**Verde Nu/** Nu Green
CN	**Negro titanio /** Titanium Black
RG	**Oro rosado /** Rose Gold
VA	**Oro cepillado /** Brushed Brass
NM	**Negro titanio cepillado /** Brushed Titanium Black

Sistemas Duplo / Duplo Systems

(Sistemas anteriores a Duplos ONE) / (Previous to Duplo ONE Systems)

Duplo WC

A890090000	Ø 90
A89009000K	Ø 110
A890090020	Ø 90 / Ø 110

Recambios Duplo para productos que utilizan estas placas accionamiento:
Duplo spare parts for finished products that use these plates:

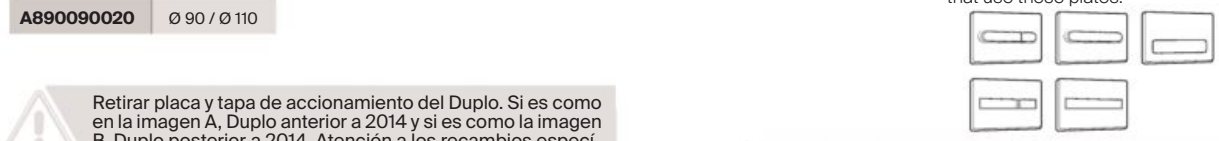

Retirar placa y tapa de accionamiento del Duplo. Si es como en la imagen A, Duplo anterior a 2014 y si es como la imagen B, Duplo posterior a 2014. Atención a los recambios específicos de cada año.
Remove the cover. If it is like image A , it is prior to 2014 and if it is like image B , Duplo is later 2014.
Attention to specific spare parts of each year.

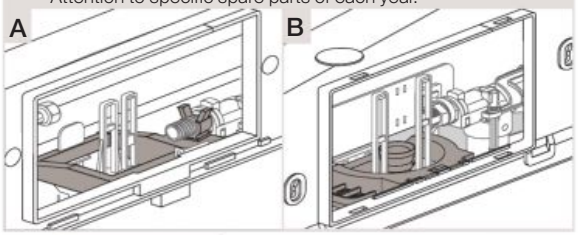

			€
1	**AV0001800R**	A	32,00
	AV0027600R	B	33,50
2	**AV0011800R**		38,70
3	**AV0001900R**		11,90
4	**AV0011900R**	A	55,40
	AV0025700R	B	53,60
5	**AV0001200R**		47,60
6	**AV0001000R**		19,70
7	**AV0025600R**		36,80
8	**AV0014600R**	A	37,50
	AV0040400R	B	55,20
9	**AV0012000R**		26,90
10	**AV0002900R**		24,70

			€
11	**AV0001100R**	Ø90-90	73,20
	AV0004800R	Ø90-110	15,90
12	**AV0027300R**		22,40
13			
13	**AV0001400R**	A	9,15
	AV0027500R	B	10,50
14	**AV0003000R**		26,90
15	**AV0031100R**	A	80,90
	AV0031300R	B	80,90
16	**AV0025900R**		12,50
29	**AV0004900R**		38,00
86*	**AV0022200R**	Ø110	11,70

86* Adaptador de Ø 90 a Ø 110 para Duplo A890090020./ Adaptator from Ø 90 to Ø 110 for Duplo A890090020.

Sistemas Duplo / Duplo Systems

(Sistemas anteriores a Duplos ONE) / (Previous to Duplo ONE Systems)

Basic WC

A890090100	Ø 90
A89009010K	Ø 110
A890090120	Ø 90/ Ø 110

Recambios Duplo para productos que utilizan estas placas accionamiento:
Duplo spare parts for finished products that use these plates:

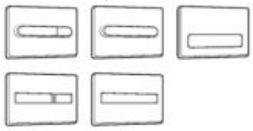

Retirar placa y tapa de accionamiento del Duplo. Si es como en la imagen A, Duplo anterior a 2014 y si es como la imagen B, Duplo posterior a 2014. Atención a los recambios específicos de cada año.
Remove the cover. If it is like image A , it is prior to 2014 and if it is like image B , Duplo is later 2014.
Attention to specific spare parts of each year.

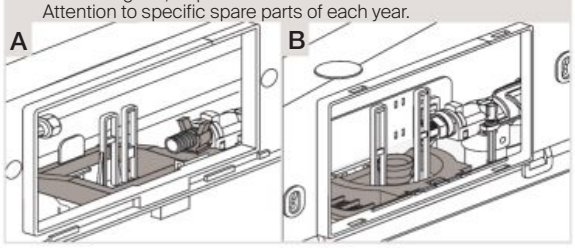

			€
1	**AV0001800R**	A	32,00
	AV0027600R	B	33,50
3	**AV0001900R**		11,90
4	**AV0011900R**	A	55,40
	AV0025700R	B	53,60
5	**AV0001200R**		47,60
6	**AV0001000R**		19,70
7	**AV0025600R**		36,80
8	**AV0014600R**	A	37,50
	AV0040400R	B	55,20
9	**AV0012000R**		26,90
10	**AV0002900R**		24,70

			€
11	**AV0001100R**	Ø90	73,20
	AV0004800R	Ø110	15,90
12 13	**AV0027300R**		22,40
13	**AV0001400R**	A	9,15
	AV0027500R	B	10,50
14	**AV0003000R**		26,90
15	**AV0031100R**	A	80,90
	AV0031300R	B	80,90
16	**AV0025900R**		12,50
86*	**AV0022200R**	Ø110	11,70

86* Adaptador de Ø 90 a Ø 110 para Duplo A890090120./ Adaptator from Ø 90 to Ø 110 for Duplo A890090120.

Sistemas Duplo / Duplo Systems
(Sistemas anteriores a Duplos ONE) / (Previous to Duplo ONE Systems)

Basic Tank

A890090200

Recambios Duplo para productos que utilizan estas placas accionamiento:
Duplo spare parts for finished products that use these plates:

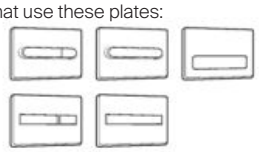

Retirar placa y tapa de accionamiento del Duplo. Si es como en la imagen A, Duplo anterior a 2014 y si es como la imagen B, Duplo posterior a 2014. Atención a los recambios específicos de cada año.
Remove the cover. If it is like image A , it is prior to 2014 and if it is like image B , Duplo is later 2014.
Attention to specific spare parts of each year.

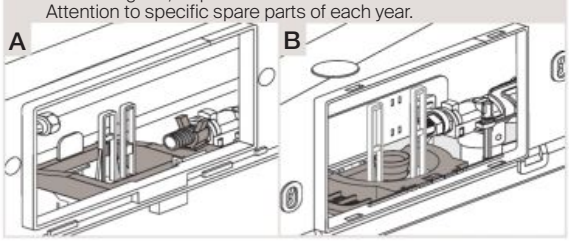

			€
1	**AV0001800R**	A	32,00
	AV0027600R	B	33,50
4	**AV0011900R**	A	55,40
	AV0025700R	B	53,60
5	**AV0001200R**		47,60
7	**AV0025600R**		36,80
8	**AV0014600R**	A	37,50
	AV0040400R	B	55,20
9	**AV0012000R**		26,90

			€
12 13	**AV0027300R**		22,40
13	**AV0001400R**	A	9,15
	AV0027500R	B	10,50
15	**AV0031100R**	A	80,90
	AV0031300R	B	80,90
16	**AV0025900R**		12,50
23	**AV0001600R**	A	36,40
	AV0032000R	B	28,80

Sistemas Duplo / Duplo Systems

(Sistemas anteriores a Duplos ONE) / (Previous to Duplo ONE Systems)

Duplo WC Compact

A890080000	Ø 90
A890080010	Ø 110
A890080020	Ø 90 / Ø 110

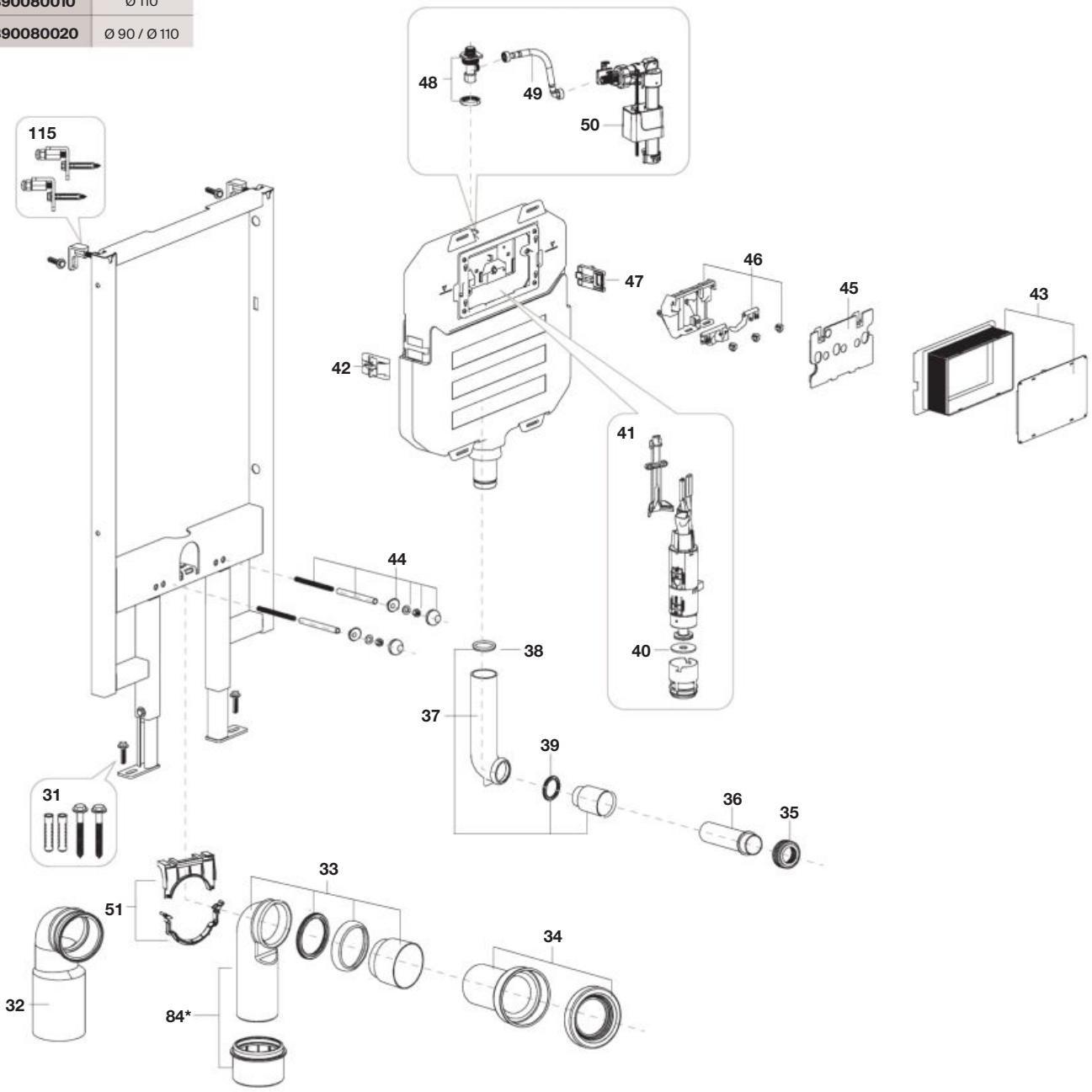

			€
31	**AV0019500R**		7,71
32	**AV0018800R**	Ø110	34,10
33	**AV0018900R**	Ø90	32,30
34			
35	**AV0018600R**		38,30
36			
35	**AV0018700R**		19,60
37	**AV0019000R**		18,80
38	**AV0019100R**		4,45
39	**AV0019200R**		5,64
40	**AV0018100R**		7,07
41	**AV0018000R**		31,70

				€
42		**AV0019400R**		7,71
47				
43		**AV0018400R**		20,80
44	2 un	**AV0018500R**		34,10
45		**AV0018300R**		8,71
46		**AV0018200R**		20,90
48		**AV0017700R**		28,30
49		**AV0017800R**		20,60
50		**AV0017900R**		28,50
51		**AV0019700R**		11,00
84*		**AV0042400R**	Ø90/ Ø110	38,20
115		**AV0069500R**		24,20

84* Codo Ø90 con adaptador de Ø90 a Ø110 para Duplo A890080020. / Elbow Ø90 with adaptator from Ø90 to Ø110 for Duplo A890080020

Sistemas Duplo / Duplo Systems

(Sistemas anteriores a Duplos ONE) / (Previous to Duplo ONE Systems)

Basic WC Compact

A890080100	Ø 90
A890080110	Ø 110
A890080120	Ø 90 / Ø 110

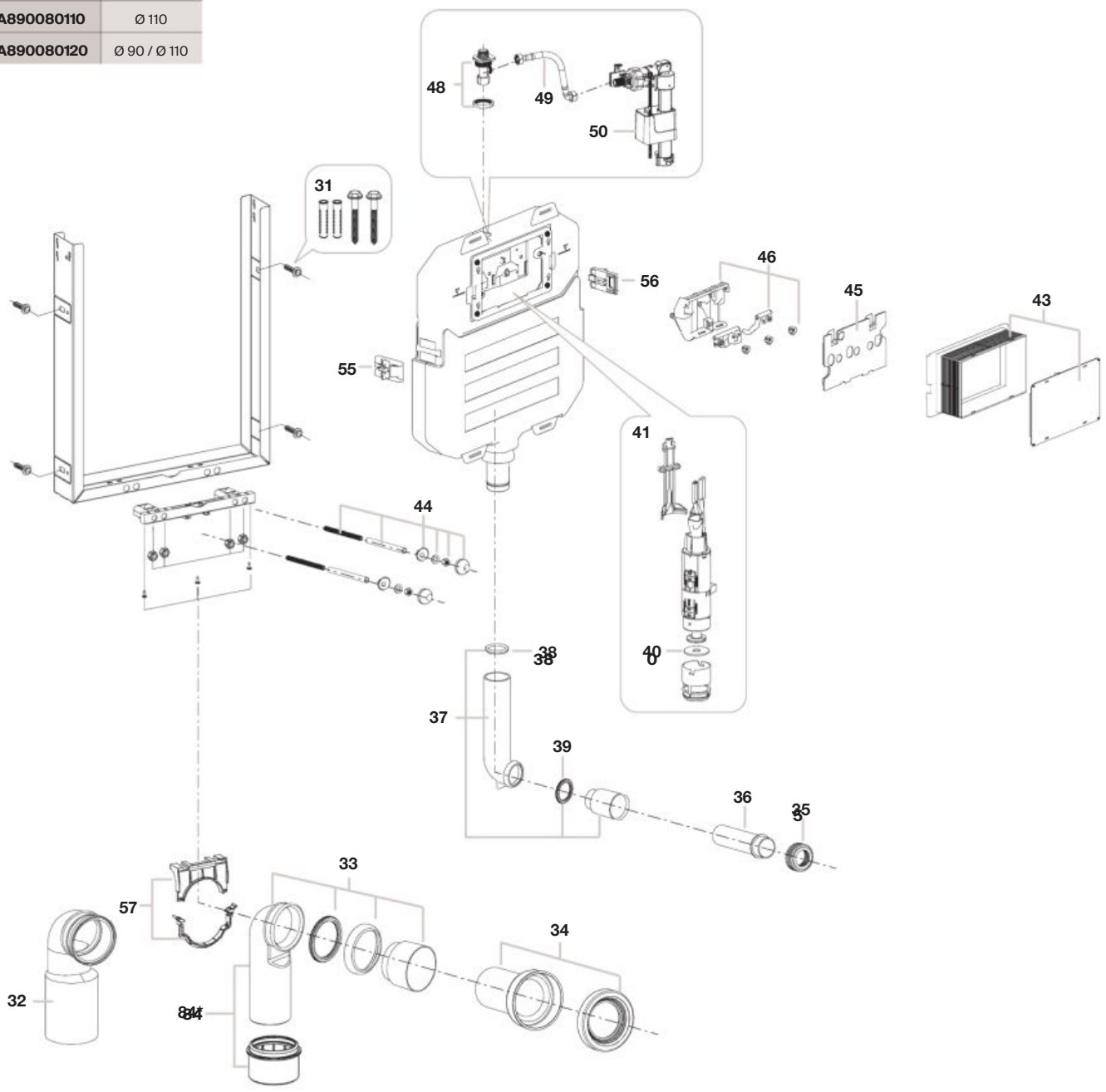

			€
31	**AV0019500R**		7,71
32	**AV0018800R**	Ø110	34,10
33	**AV0018900R**	Ø90	32,30
34			
35	**AV0018600R**		38,30
36			
35	**AV0018700R**		19,60
37	**AV0019000R**		18,80
38	**AV0019100R**		4,45
39	**AV0019200R**		5,64
40	**AV0018100R**		7,07
41	**AV0018000R**		31,70

			€
43	**AV0018400R**		20,80
44	2 un **AV0018500R**		34,10
45	**AV0018300R**		8,71
46	**AV0018200R**		20,90
48	**AV0017700R**		28,30
49	**AV0017800R**		20,60
50	**AV0017900R**		28,50
55	**AV0020100R**		7,71
56			
57	**AV0020000R**		15,50
84*	**AV0042400R**	Ø90/ Ø110	38,20

84* Codo Ø90 con adaptador de Ø90 a Ø110 para Duplo A890080120. / Elbow Ø90 with adaptator from Ø90 to Ø110 for Duplo A890080120

Sistemas Duplo / Duplo Systems
(Sistemas anteriores a Duplos ONE) /
(Previous to Duplo ONE Systems)

Basic Tank Compact

A890080200

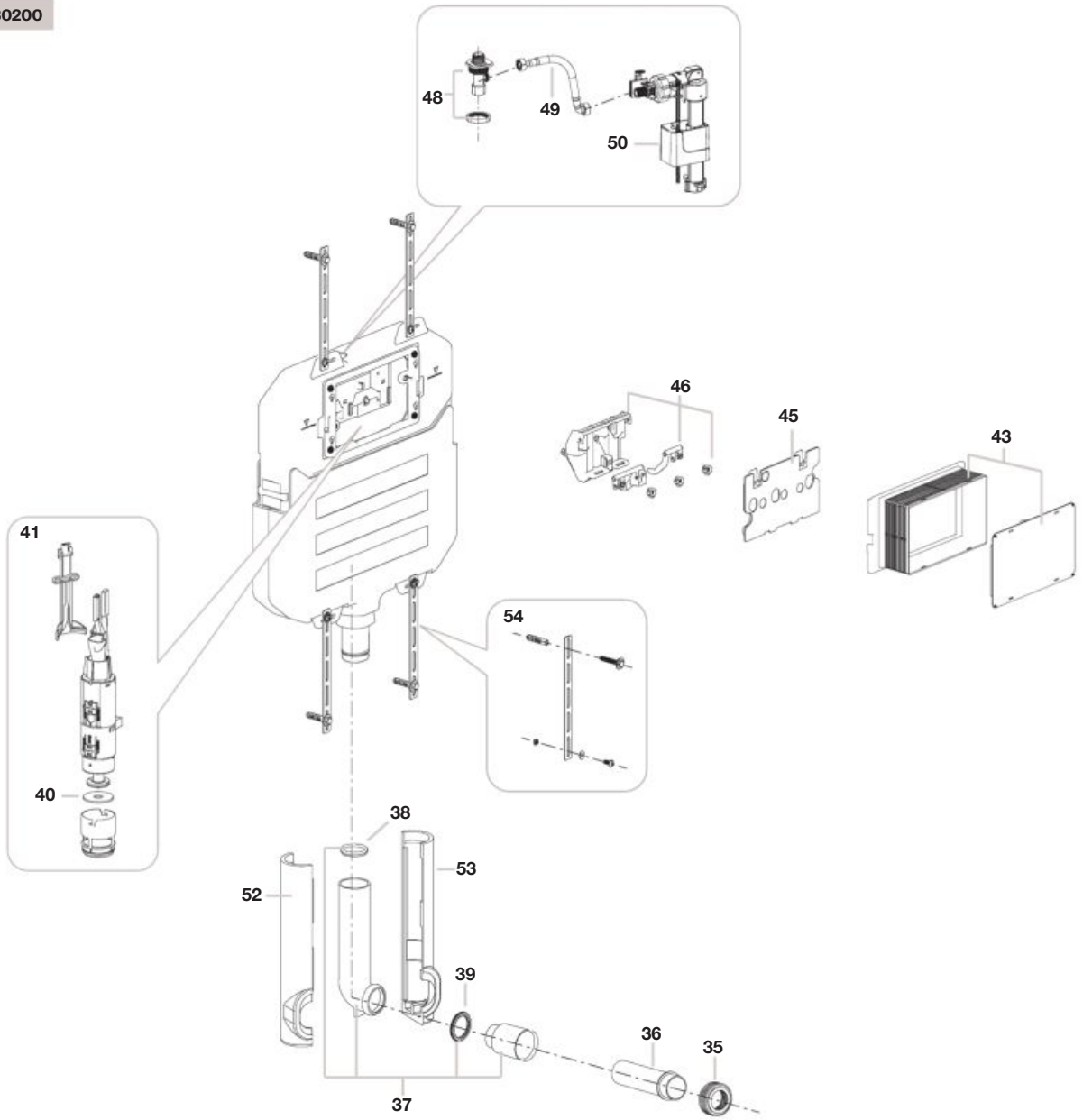

		€
35	**AV0018600R**	38,30
36		
35	**AV0018700R**	19,60
37	**AV0019000R**	18,80
38	**AV0019100R**	4,45
39	**AV0019200R**	5,64

		€
40	**AV0018100R**	7,07
41	**AV0018000R**	31,70
43	**AV0018400R**	20,80
45	**AV0018300R**	8,71
46	**AV0018200R**	20,90
48	**AV0017700R**	28,30

		€
49	**AV0017800R**	20,60
50	**AV0017900R**	28,50
52	**AV0019300R**	19,60
53		
54	**AV0019600R**	11,10

Sistemas Duplo / Duplo Systems
(Sistemas anteriores a Duplos ONE) / (Previous to Duplo ONE Systems)

Duplo WC Smart

A890090800 | Ø 90/ Ø 110

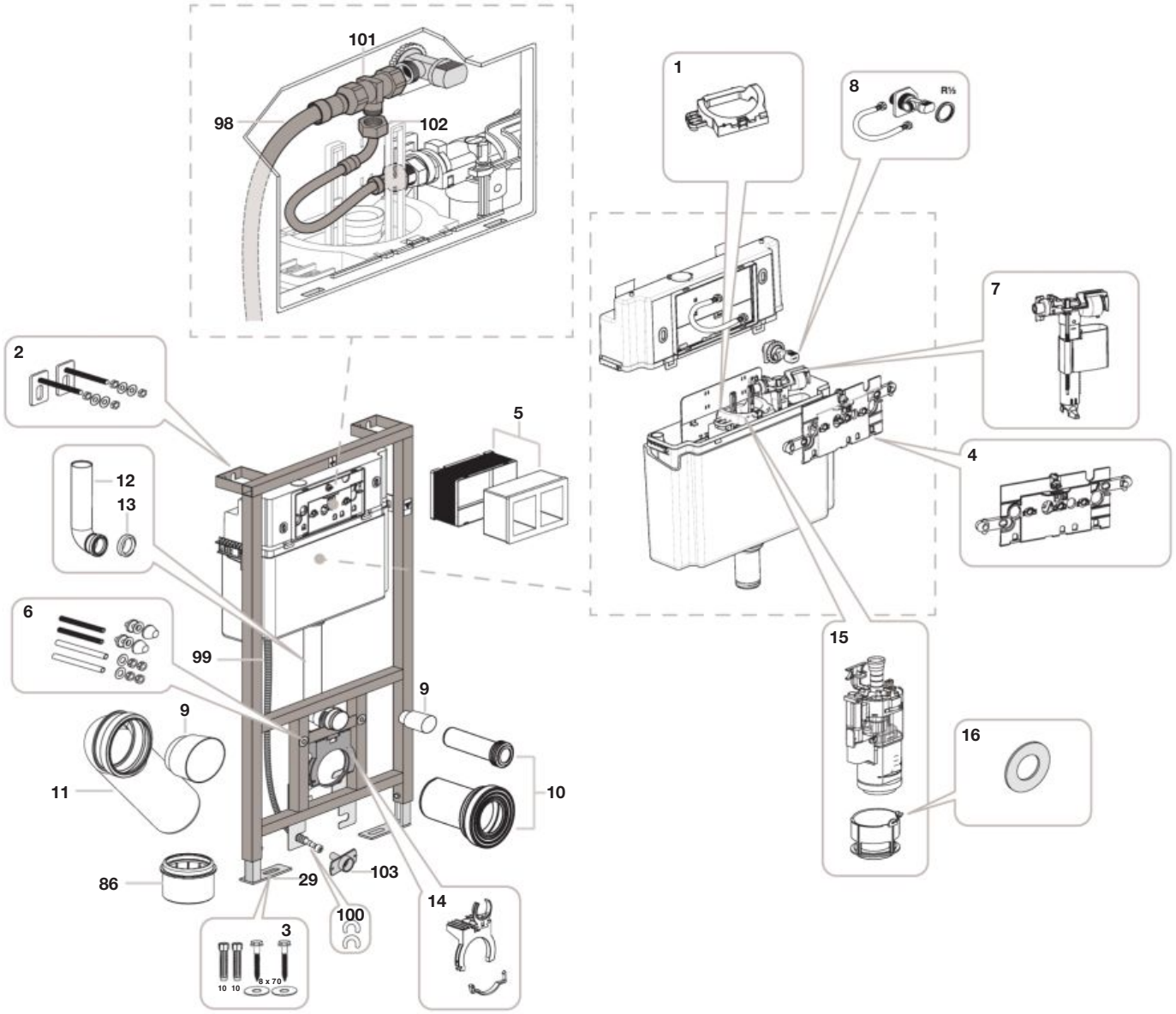

		€
1	**AV0027600R**	33,50
2	**AV0011800R**	38,70
3	**AV0001900R**	11,90
4	**AV0025700R**	53,60
5	**AV0001200R**	47,60
6	**AV0001000R**	19,70
7	**AV0025600R**	36,80
8	**AV0040400R**	55,20
9	**AV0012000R**	26,90

			€
10	**AV0002900R**		24,70
11	**AV0001100R**	Ø90	73,20
12	**AV0027300R**		22,40
13			
13	**AV0027500R**		10,50
14	**AV0003000R**		26,90
15	**AV0031300R**		80,90
16	**AV0025900R**		12,50
29	**AV0004900R**		38,00

			€
86	**AV0022200R**	Ø110	11,70
98	**AV0044500R**		74,40
99			
100			
103			
101	**AV0041800R**		92,10
102			
103	**AV0044600R**		15,30

Sistemas Duplo / Duplo Systems
(Sistemas anteriores a Duplos ONE) /
(Previous to Duplo ONE Systems)

Duplo WC Freestanding

A890090700 | Ø 90 / Ø 110

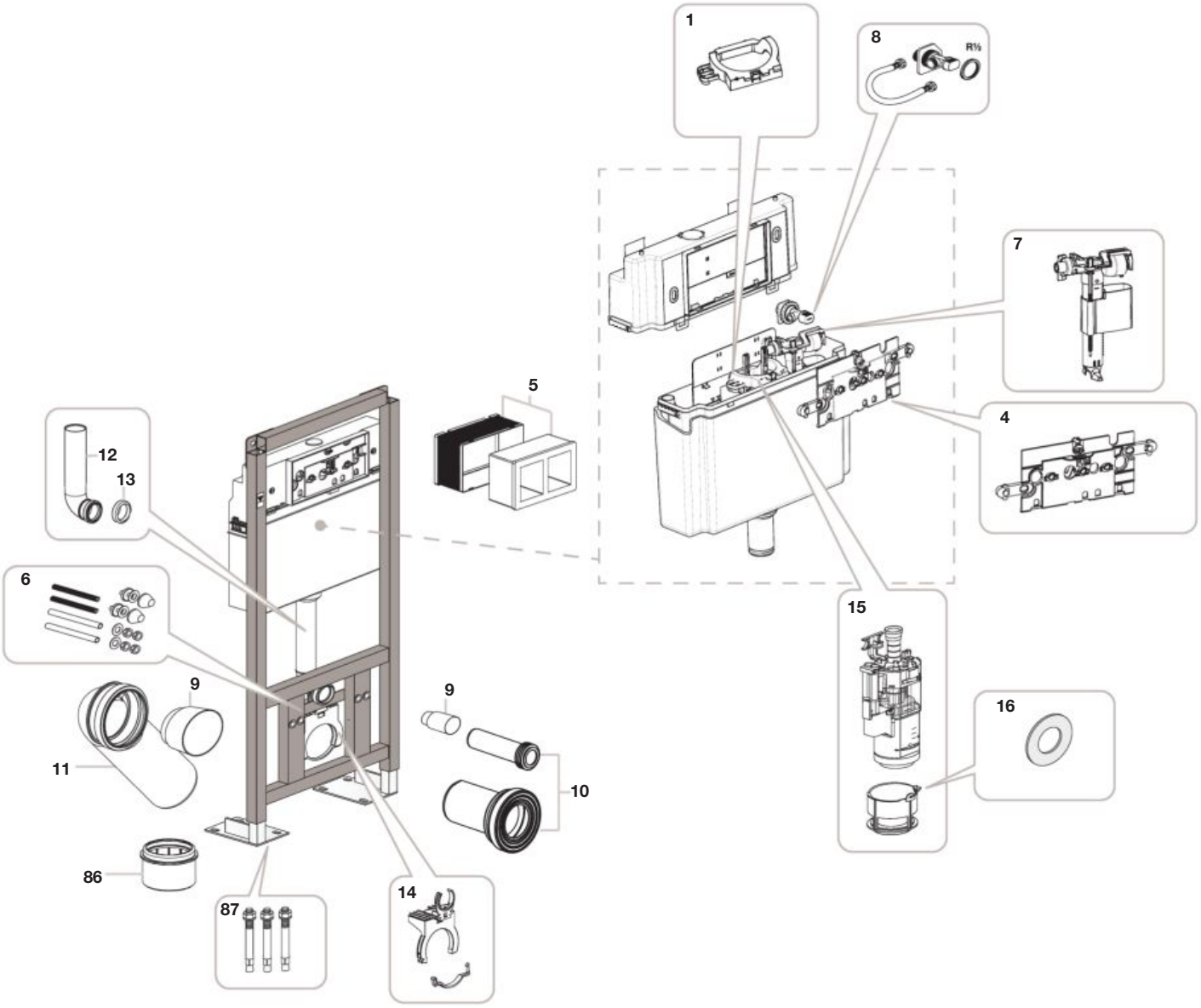

			€
1	**AV0027600R**		33,50
4	**AV0025700R**		53,60
5	**AV0001200R**		47,60
6	**AV0001000R**		19,70
7	**AV0025600R**		36,80
8	**AV0040400R**		55,20
9	**AV0012000R**		26,90
10	**AV0002900R**		24,70
11	**AV0001100R**	Ø 90	73,20

				€
12		**AV0027300R**		22,40
13				
13		**AV0027500R**		10,50
14		**AV0003000R**		26,90
15		**AV0031300R**		80,90
16		**AV0025900R**		12,50
86		**AV0022200R**	Ø110	11,70
87	2 un	**AV0042600R**		6,11

Sistemas Duplo / Duplo Systems
(Sistemas anteriores a Duplos ONE) / (Previous to Duplo ONE Systems)

Duplo WC Fluxor

A890092100	Ø 90/ Ø 110

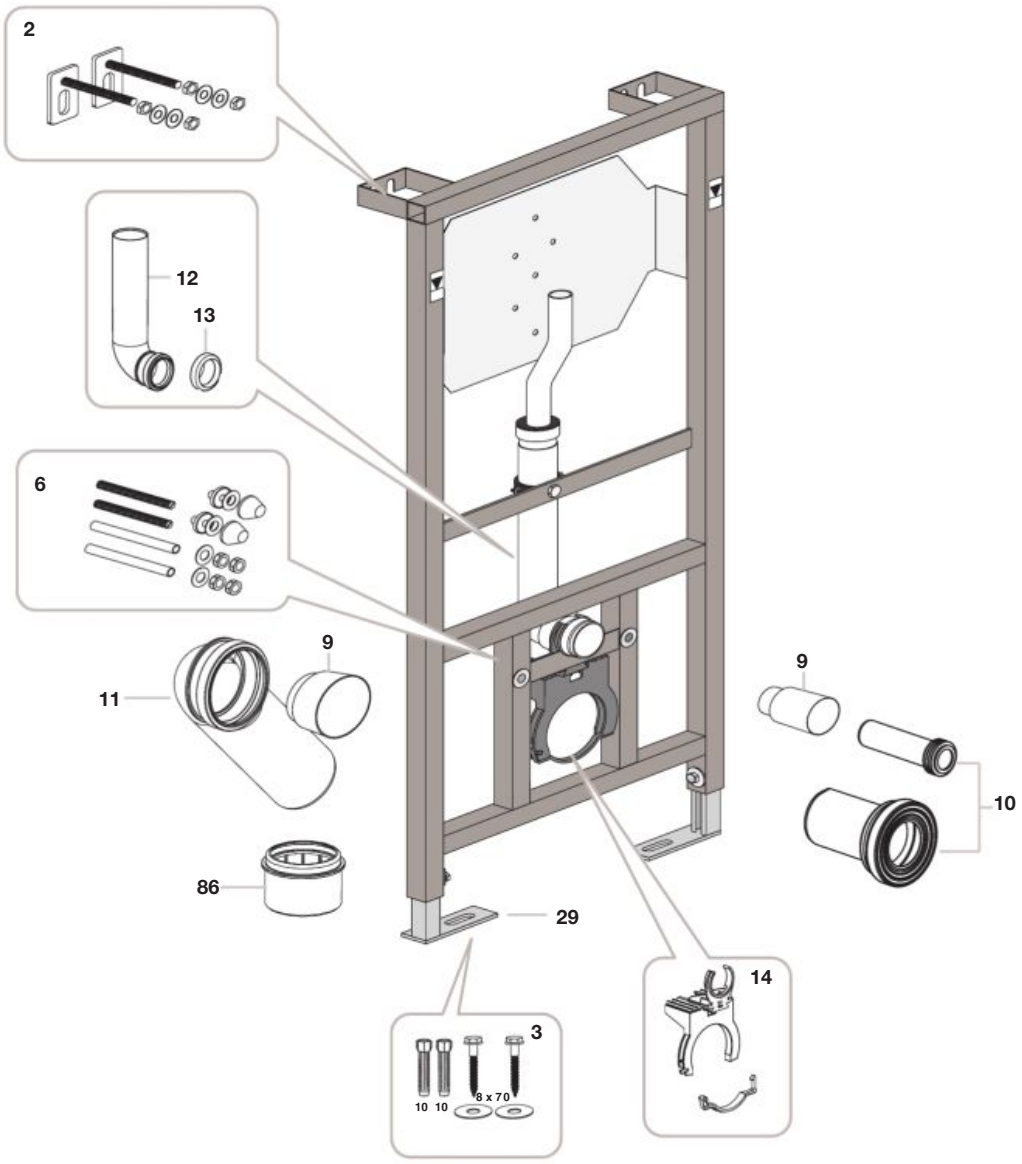

			€
2	**AV0011800R**		38,70
3	**AV0001900R**		11,90
6	**AV0001000R**		19,70
9	**AV0012000R**		26,90
10	**AV0002900R**		24,70
11	**AV0001100R**	Ø 90	73,20

			€
12	**AV0027300R**		22,40
13	**AV0027500R**		10,50
14	**AV0003000R**		26,90
29	**AV0004900R**		38,00
86	**AV0022200R**	Ø110	11,70

Sistemas Duplo / Duplo Systems

(Sistemas anteriores a Duplos ONE) /
(Previous to Duplo ONE Systems)

Duplo WC bajo ventana / Duplo WC underwindow

A890121010 | Ø 90 / Ø 110

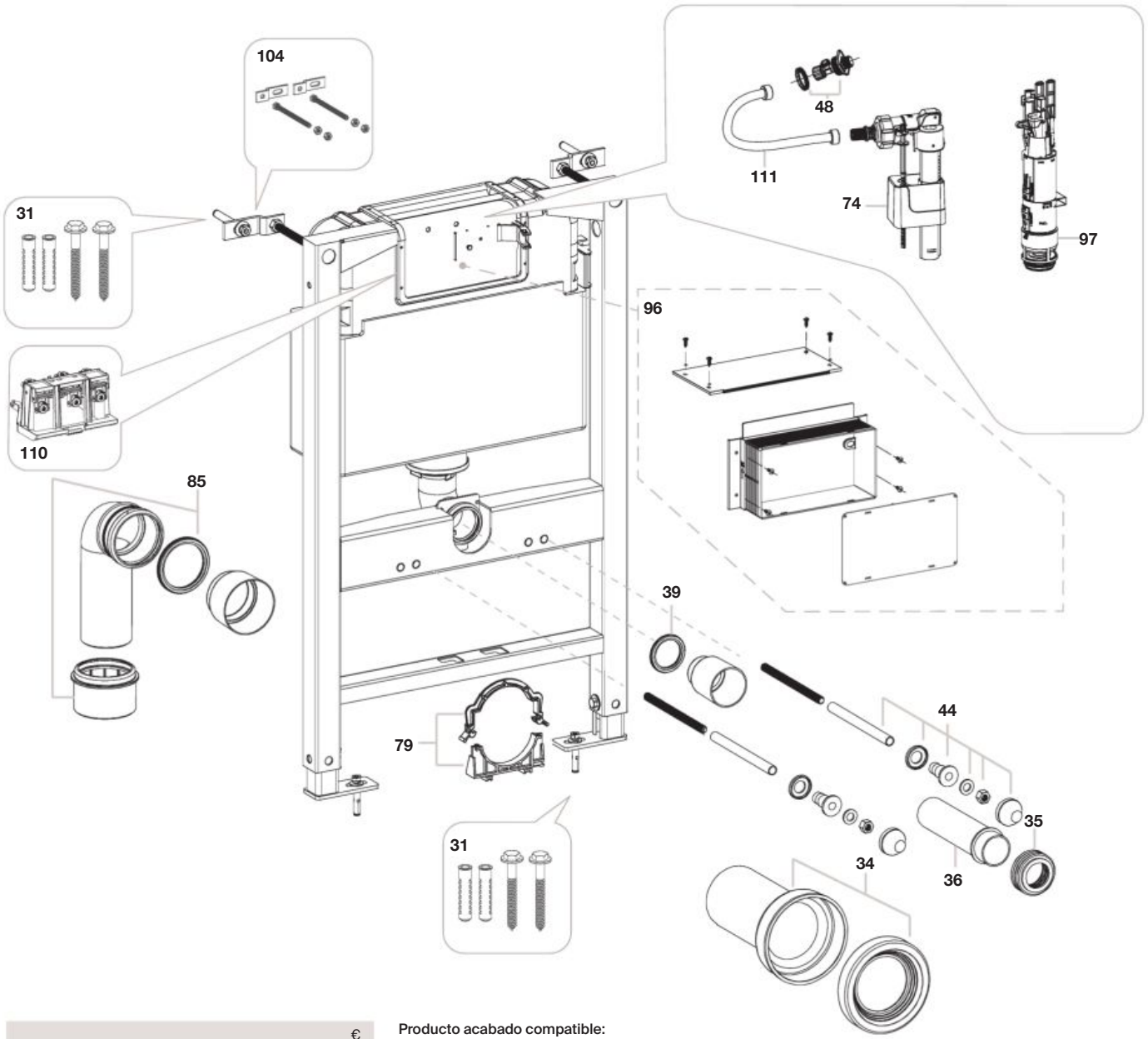

				€
31		**AV0019500R**		7,71
34				
35		**AV0018600R**		38,30
36				
35		**AV0018700R**		19,60
39		**AV0019200R**		5,64
44	2 un	**AV0018500R**		34,10
48		**AV0017700R**		28,30
74		**AV0029400R**		58,80
79		**AV0031700R**		18,50
85		**AV0042500R**	Ø90/Ø110	38,20
96		**AV0043700R**		22,70
104		**AV0042700R**		37,30
110		**AV0045400R**		19,20
111		**AV0050000R**		54,90

Producto acabado compatible:
Compatible finished products:

		€
97	**A890121SA0**	-

Sistemas Duplo / Duplo Systems
(Sistemas anteriores a Duplos ONE) / (Previous to Duplo ONE Systems)

Basic Tank bajo ventana / Basic Tank underwindow

A890121200	L
A890121201	LH

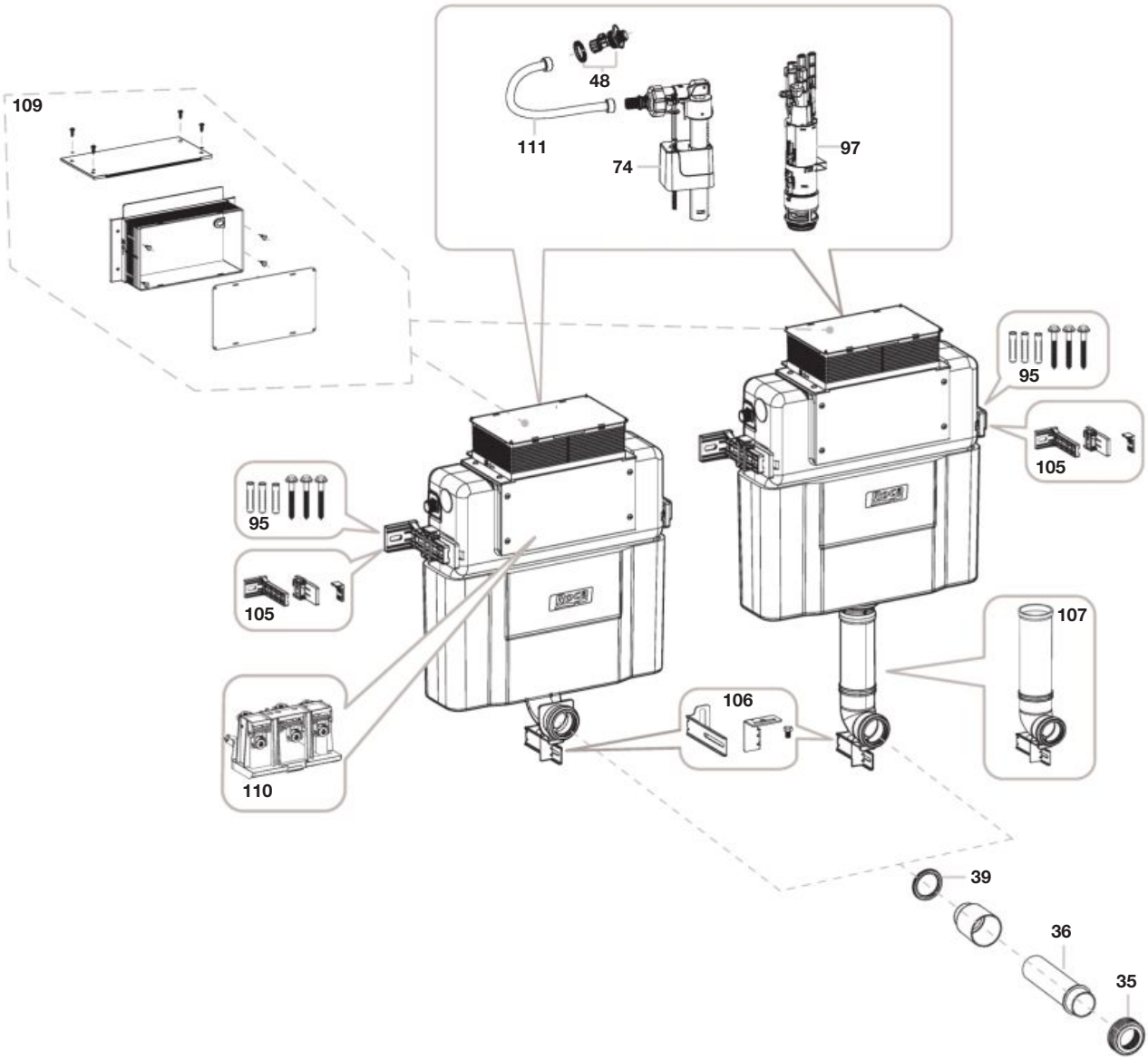

			€
35		**AV0018600R**	38,30
36			
35		**AV0018700R**	19,60
39		**AV0019200R**	5,64
48		**AV0017700R**	28,30
74		**AV0029400R**	58,80
95		**AV0041400R**	24,20
105	2 un		
109		**AV0041300R**	22,70
106		**AV0042800R**	19,60
107		**AV0042900R**	15,60
110		**AV0045400R**	19,20
111		**AV0050000R**	54,90

Producto acabado compatible:
Compatible finished products:

		€
97	**A890121SA0**	-

Sistemas Duplo / Duplo Systems
(Sistemas anteriores a Duplos ONE) /
(Previous to Duplo ONE Systems)

Duplo Urinario Universal / Duplo Urinal Universal

A890094100

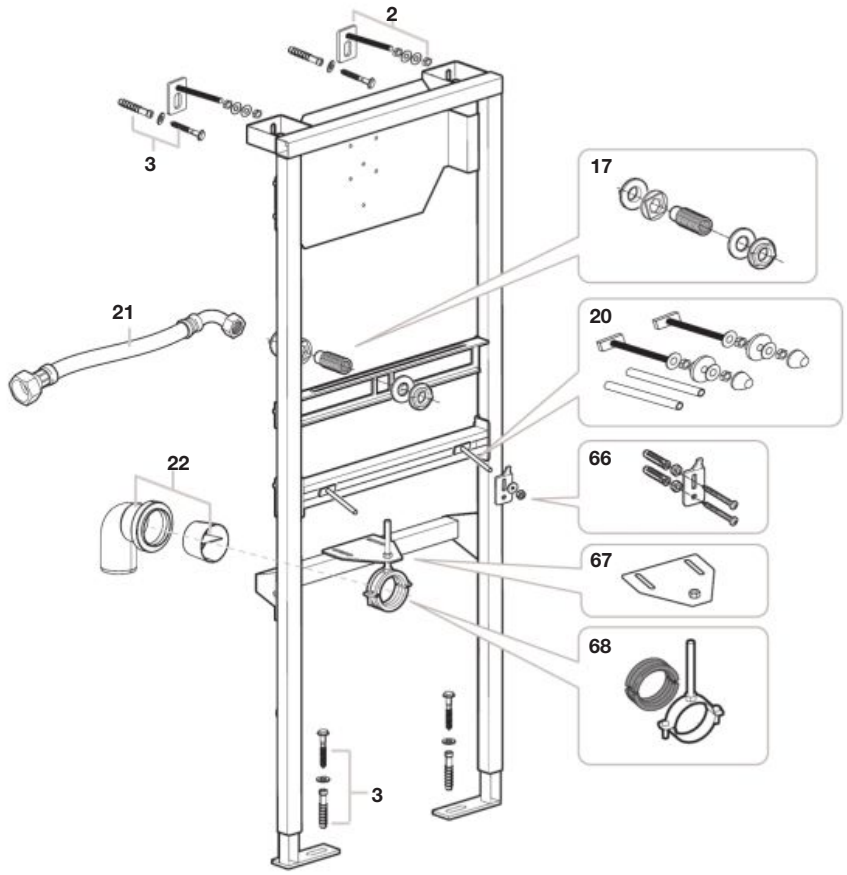

				€
2	2 un	**AV0011800R**		38,70
3	2 un	**AV0001900R**		11,90
17		**AV0002100R**		39,50
20		**AV0002300R**		21,30
21		**AV0002000R**		45,20
22		**AV0002400R**	D50-87°	23,30
66	2 un	**AV0017500R**		3,91
67		**AV0030700R**		31,70
68		**AV0030600R**		14,50

Duplo Urinario 1120 / Duplo Urinal 1120

A890094200

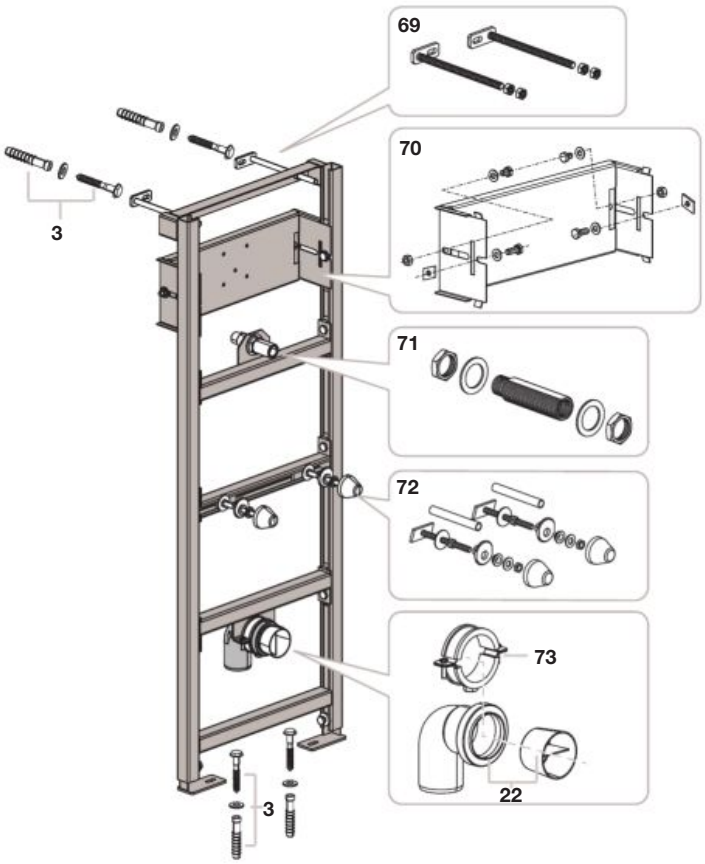

				€
3	2 un	**AV0001900R**		11,90
22		**AV0002400R**	D50-87°	23,30
69		**AV0030100R**		58,00
70		**AV0030200R**		102,00
71		**AV0030300R**		68,60
72		**AV0030400R**		20,80
73		**AV0030500R**		7,92

Sistemas Duplo / Duplo Systems
(Sistemas anteriores a Duplos ONE) / (Previous to Duplo ONE Systems)

Pro UR System

A890094000

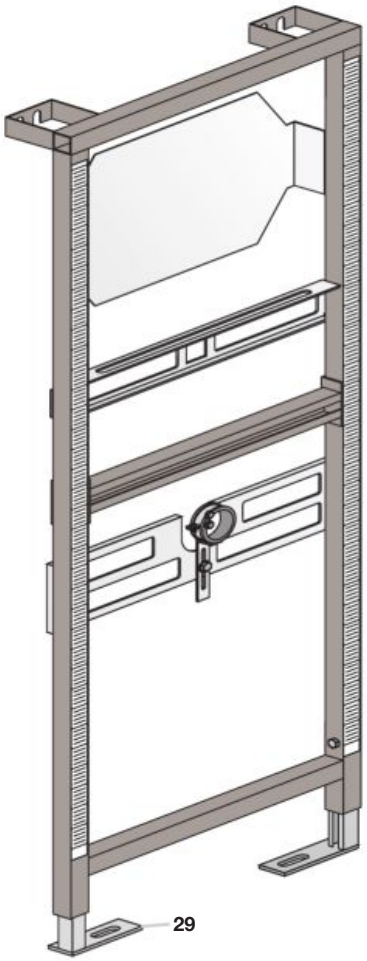

Recambios Duplo para productos que utilizan estas placas accionamiento:
Duplo spare parts for finished products that use theese plates:

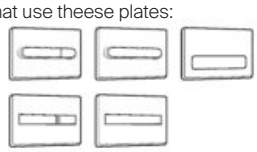

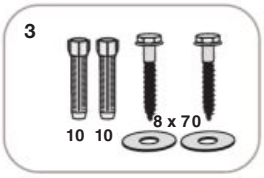

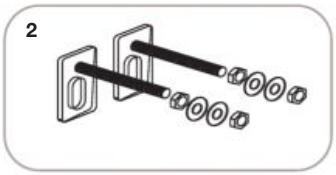

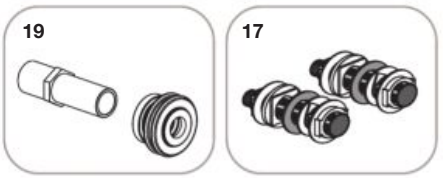

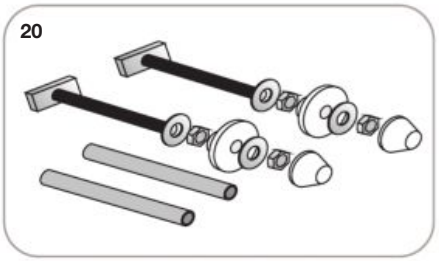

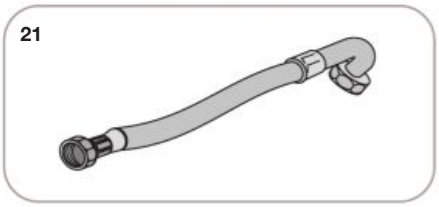

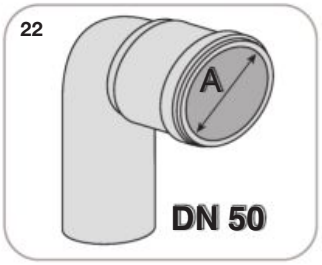

		€
2	**AV0011800R**	38,70
3	**AV0001900R**	11,90
17	**AV0002100R**	39,50
19	**AV0002200R**	36,50

			€
20	**AV0002300R**		21,30
21	**AV0002000R**		45,20
22	**AV0002400R**	A=50	23,30
29	**AV0004900R**		38,00

Sistemas Duplo / Duplo Systems
(Sistemas anteriores a Duplos ONE) /
(Previous to Duplo ONE Systems)

Duplo Lavabo / Duplo Washbasin

A890093000

Recambios Duplo para productos
que utilizan estas placas accionamiento:
Duplo spare parts for finished products
that use theese plates:

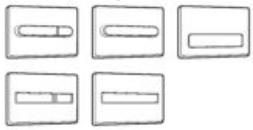

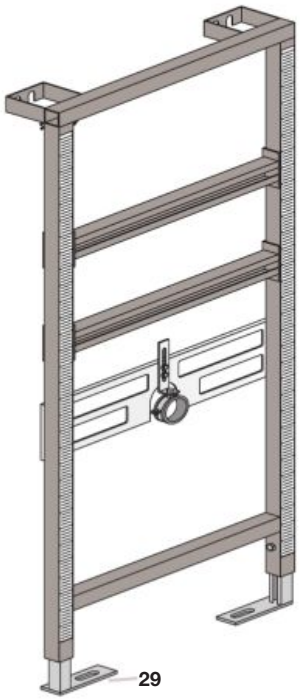

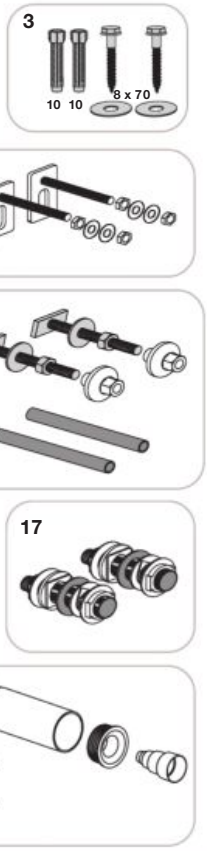

		€
2	**AV0011800R**	38,70
3	**AV0001900R**	11,90
17	**AV0002100R**	39,50
18	**AV0002600R**	23,30
29	**AV0004900R**	38,00
30	**AV0002500R**	21,30

Pro BD System

A890091000

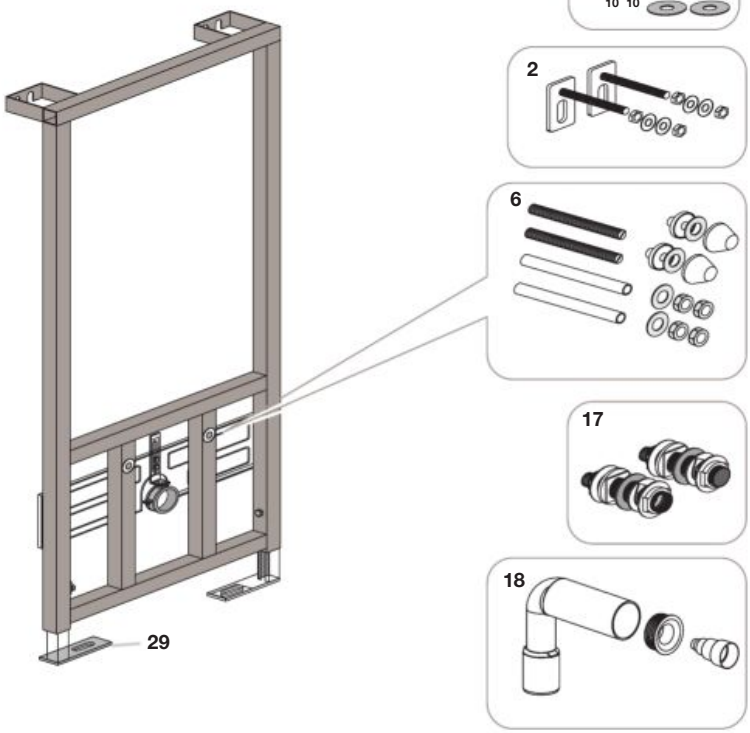

		€
2	**AV0011800R**	38,70
3	**AV0001900R**	11,90
6	**AV0001000R**	19,70
17	**AV0002100R**	39,50
18	**AV0002600R**	23,30
29	**AV0004900R**	38,00

Sistemas Duplo / Duplo Systems
(Sistemas anteriores a Duplos ONE) / (Previous to Duplo ONE Systems)

Duplo Bidé / Duplo bidet

A890091200

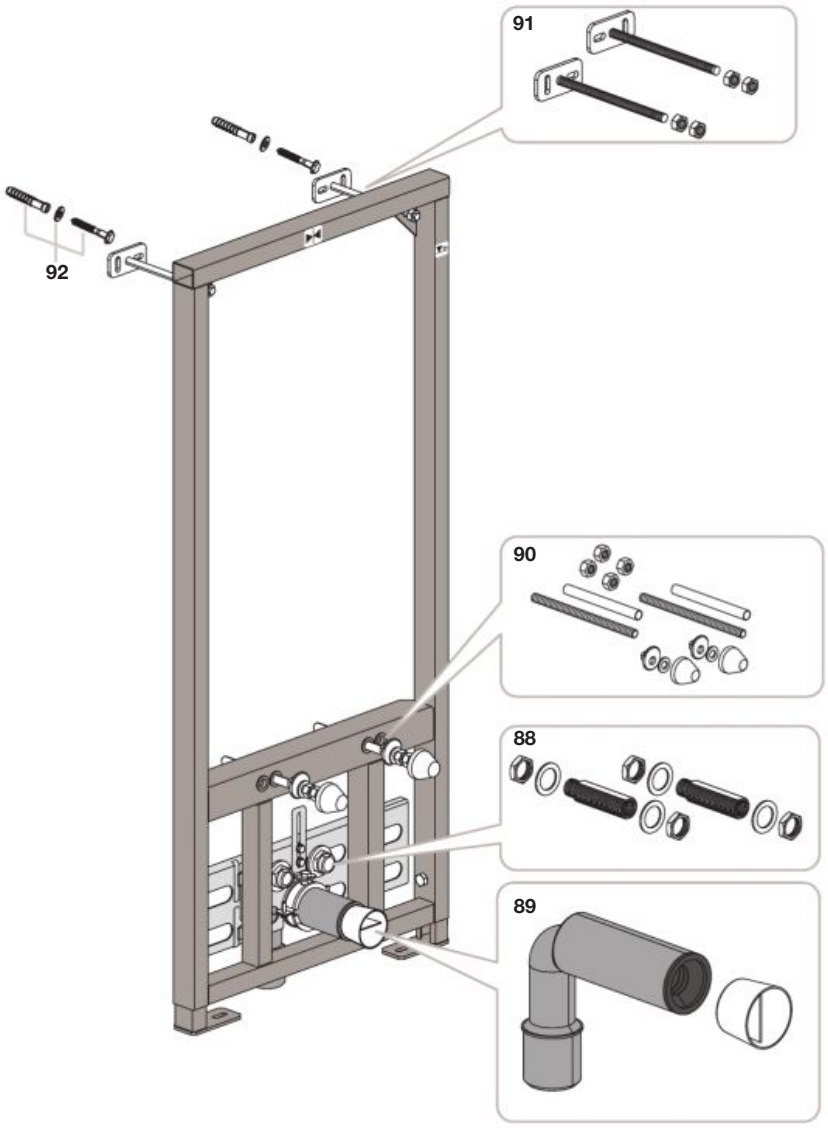

			€
88		**AV0040700R**	45,60
89		**AV0040600R**	34,90
90		**AV0040800R**	44,40
91		**AV0040900R**	68,20
92	2 un	**AV0041000R**	91,80

Sistemas Duplo / Duplo Systems
(Sistemas anteriores a Duplos ONE) /
(Previous to Duplo ONE Systems)

Basic Bidé / Basic bidet

A890091100

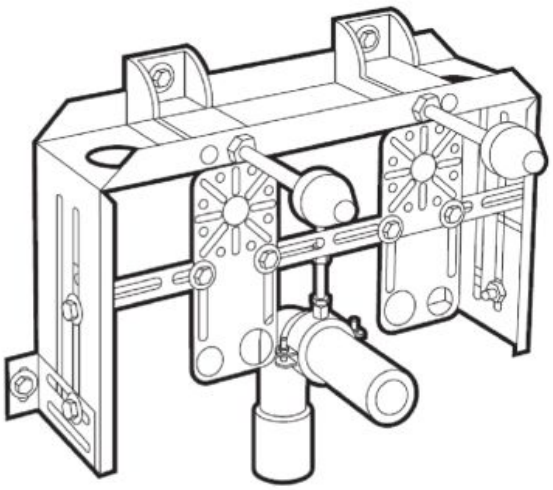

Recambios Duplo para productos
que utilizan estas placas accionamiento:
Duplo spare parts for finished products
that use theese plates:

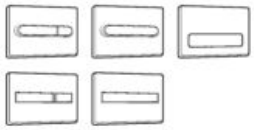

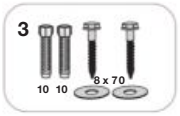

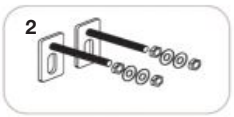



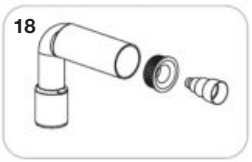

		€
2	**AV0011800R**	38,70
3	**AV0001900R**	11,90
6	**AV0001000R**	19,70
18	**AV0002600R**	23,30

Placas de accionamiento / Plush plates

(Sistemas anteriores a Duplos ONE) / (Previous to Duplo ONE Systems)

Placas de accionamiento mecánico PL1, PL2, PL4 y PL6. / Mechanical plush plates, PL1, PL2, PL4, and PL6.

PL1 Single	PL2 Single	PL4 Dual	PL6 Dual
A890095100	A890096100	A890098001	A890085001
PL1 Dual	**PL2 Dual**	A890098005	A890085005
A890095000	A890096000	A890098002	A890085002
A890095001	A890096001	A890098000	A890085000
A890095002	A890096002		
A890095005	A890096005		

				€
24		AV0000700R		40,50
25	3 un	AV0000900R		20,30
26	2 un			
27	2 un			
25	3 un	AV0026000R	Varillas extra-largas / Extra-large rods	65,80
26	2 un			
27	2 un			
30	2 un			
31	3 un			

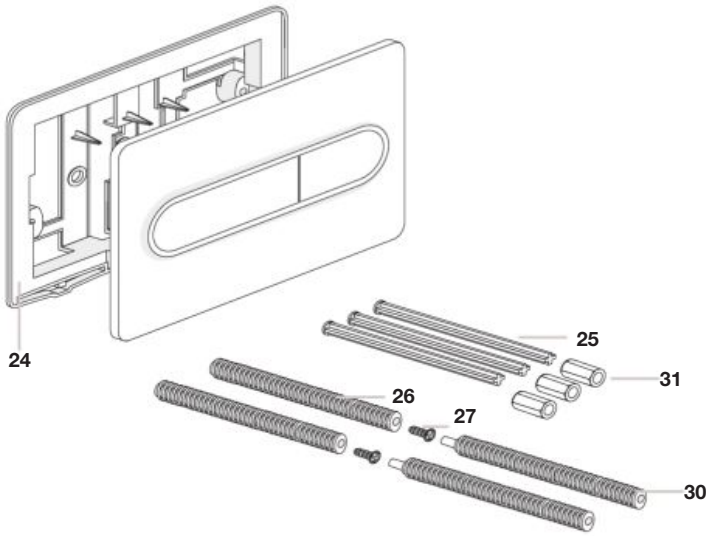

Placas de accionamiento mecánico PL3 y PL5. / Mechanical plush plates PL3 and PL5.

PL3 Single	PL5 Dual
A890097104	A890099001
PL3 Dual	A890099005
A890097004	A890099002
	A890099000

			€
24		AV0000700R	40,50
61	2 un	AV0000800R	55,10
62	2 un		
63	3 un		

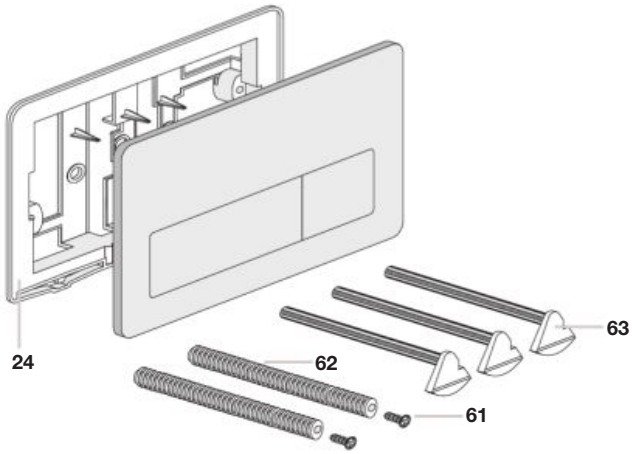

Placas de accionamiento mecánico L1 y L2. / Mechanic plush plates L1 and L2.

L1 Dual	L2 Dual
A890086001	A890087001
A890086002	A890087004
A890086000	

				€
80		AV0027800R	L1	21,70
		AV0029000R	L2	21,70
		AV0030000R	L2 inox	21,70
81	2 un	AV0027700R		26,20
82	2 un			
83	2 un			

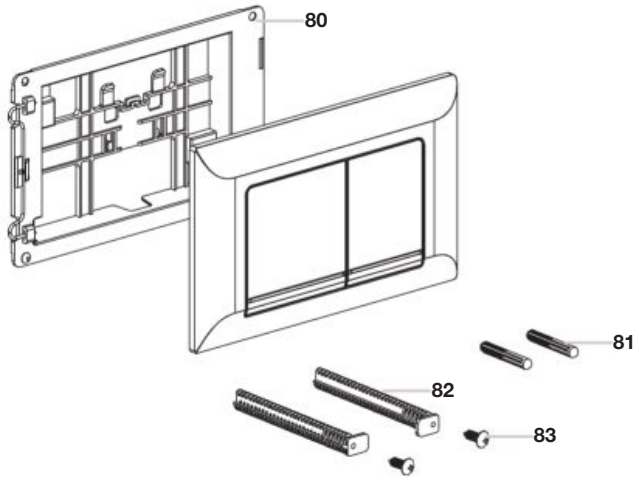

Placas de accionamiento / Plush plates

(Sistemas anteriores a Duplos ONE) /
(Previous to Duplo ONE Systems)

Placas de accionamiento mecánico PL3-E y EP-1. / Mechanical plush plates PL3-E and EP-1.

PL3-E	
A890097200	6/3L
A890097400	6/3, 4.5/3, 4/2 L

EP-1	
A890102008	6/3, 4.5/3, 4/2 L

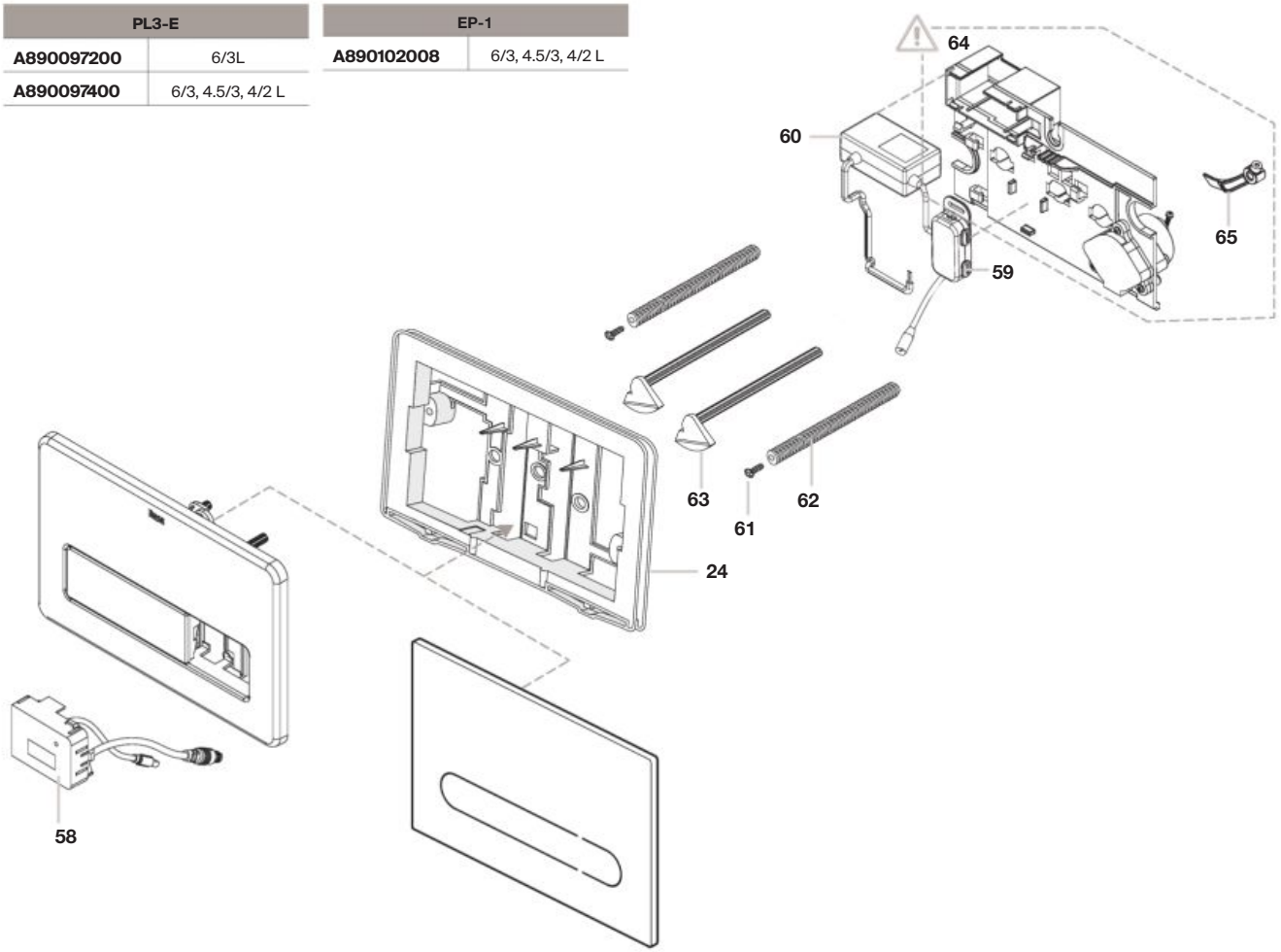

Si su Duplo es como en la imagen A, es anterior a 2014 y si es como la imagen B, es posterior a 2014. Atención a los recambios específicos de cada año. /
If the Duplo is like image A , it is prior to 2014 and if it is like image B , Duplo is later 2014. Attention to specific spare parts of each year.

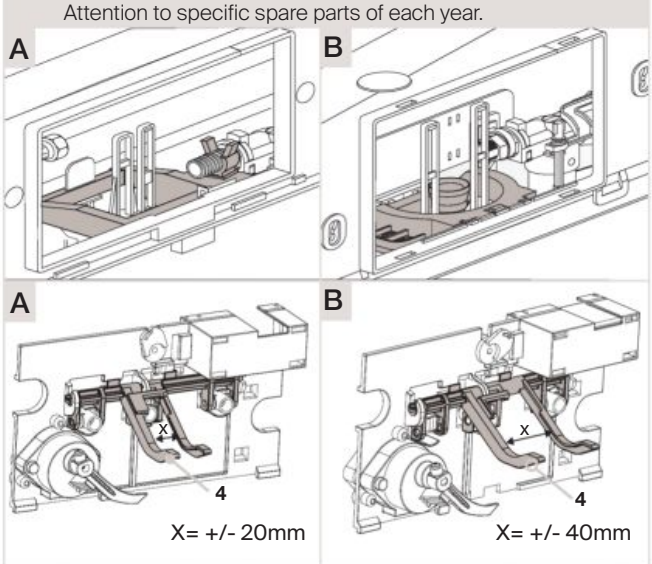

				€
4		**AV0011900R**	A	55,40
		AV0025700R	B	53,60
24		**AV0000700R**		40,50
58		**AV0033500R**	A ó B	215,00
59		**AG0103407R**		10,60
60		**AV0035000R**		91,50
61	2 un			
62	2 un	**AV0000800R**		55,10
63	3 un			
64		**AV0031800R**	A ó B	92,40
65		**AV0021400R**		3,92

Placas de accionamiento / Plush plates
(Sistemas anteriores a Duplos ONE) /
(Previous to Duplo ONE Systems)

Placas accionamiento mecánico PL3-E y EP-1 Compact. / Mechanical plush plates PL3-E and EP-1 Compact.

PL3-E COMPACT	
A890097300	6/3, 4.5/3, 4/2 L

EP-1 COMPACT	
A890103008	6/3, 4.5/3, 4/2 L

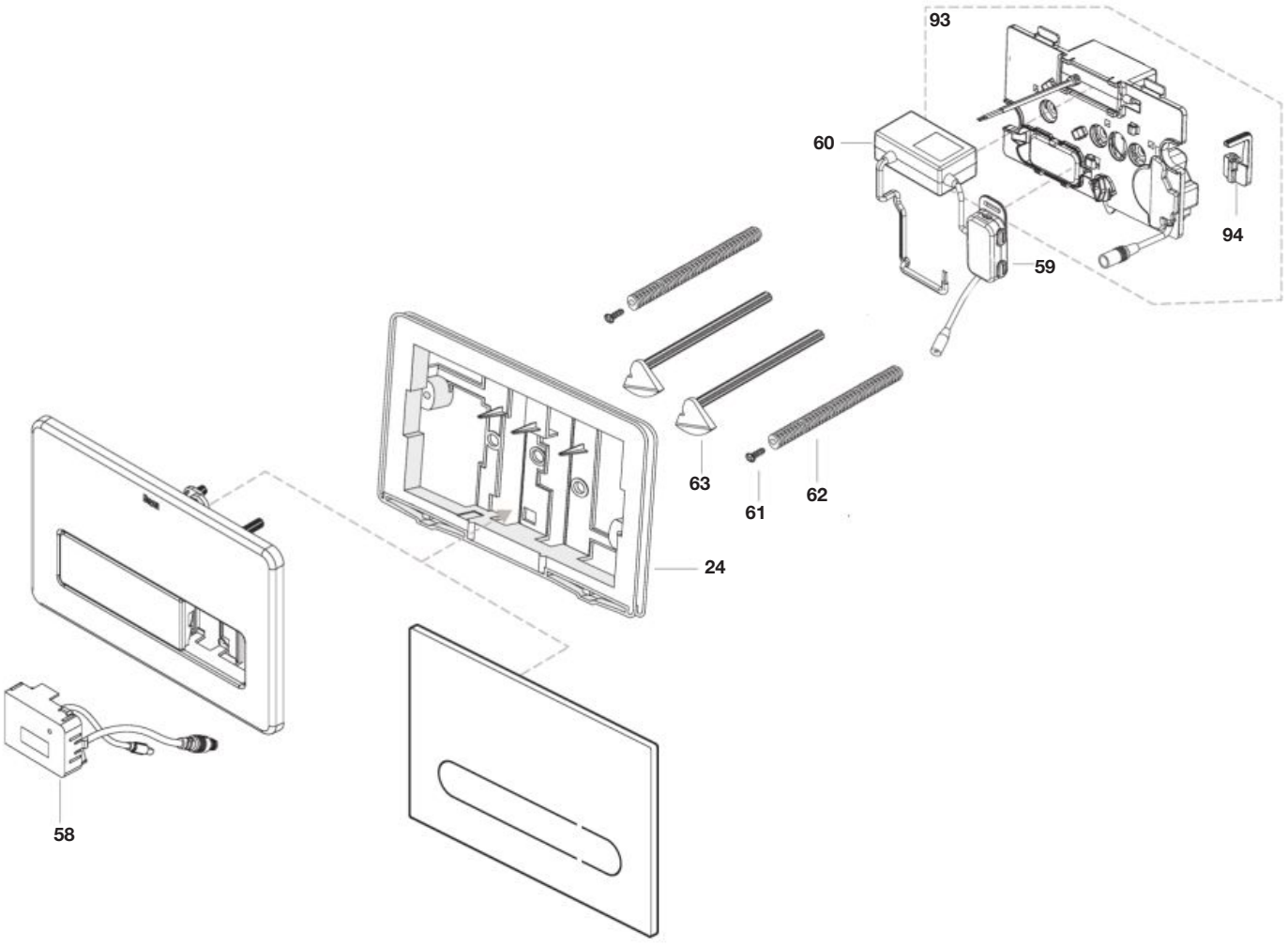

			€
24		**AV0000700R**	40,50
58		**AV0033500R**	215,00
59		**AG0103407R**	10,60
60		**AV0035000R**	91,50
61	2 un		
62	2 un	**AV0000800R**	55,10
63	3 un		
93		**AV0041100R**	104,00
94		**AV0041200R**	4,14

Placas de accionamiento / Plush plates

(Sistemas anteriores a Duplos ONE) /
(Previous to Duplo ONE Systems)

Placas accionamiento mecánico EP-3, PL10-E y PL10-E Pro. / Mechanical plush plates EP-3, Pl10-E and PL10-E Pro.

EP-3	PL10-E Pro
A8901043..	**A890189500**
PL10-E	
A890189510	

Las últimas posiciones de cada código indican el acabado (color):
The lasts positions indicates the finish (colour):

19 Blanco / White
18 Negra / Black
63 Perla / Pearl
64 Onix / Onix
65 Beige / Beige
66 Café / Coffee

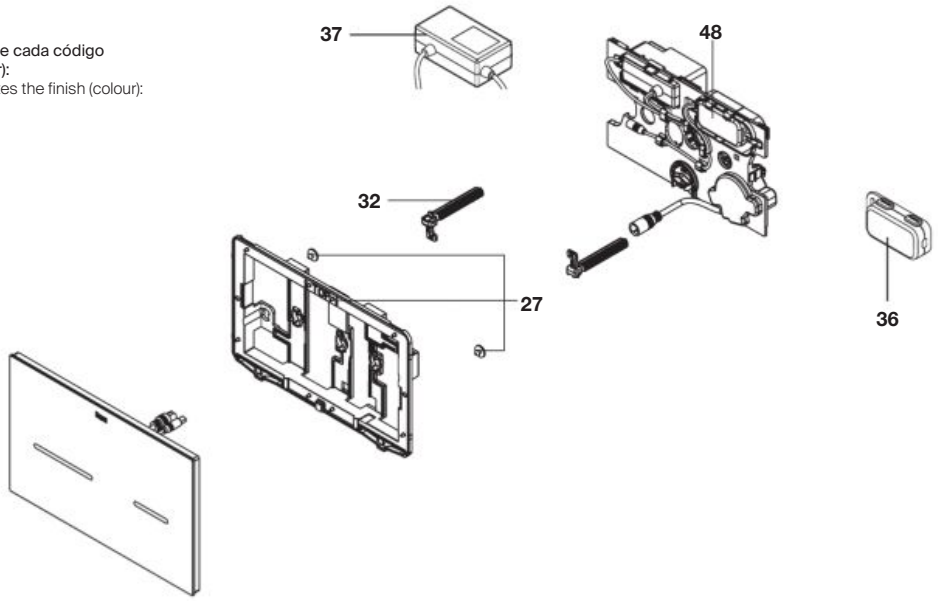

EP-3

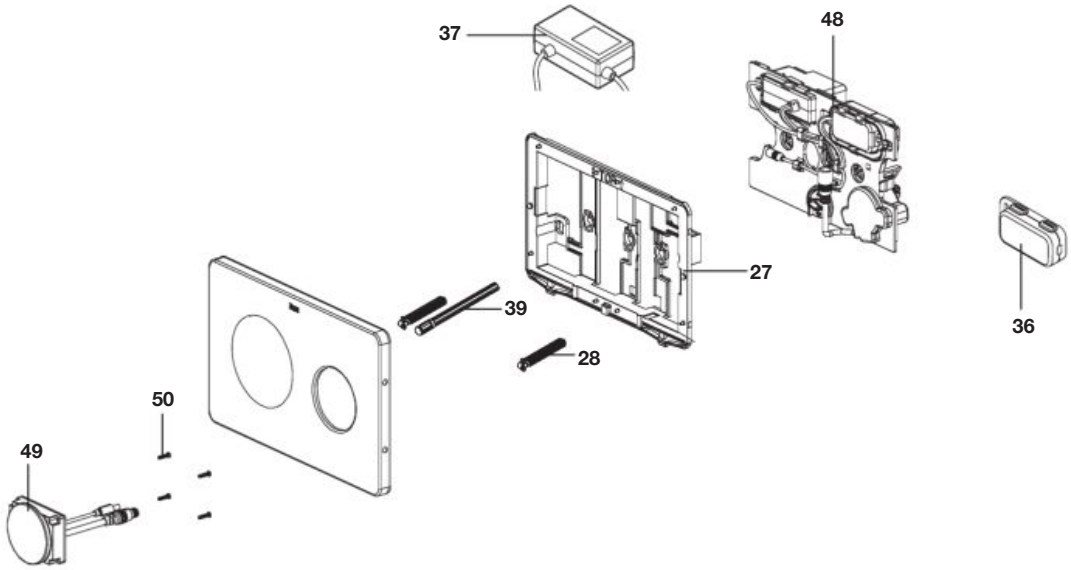

PL10-E Pro
PL10-E

			€
27		**AV0048700R**	5,20
28	2 un	**AV0046700R**	3,62
39	3 un		
32	2 un	**AV0048500R**	3,62
36		**AG0103407R**	10,60
37		**AV0035000R**	91,50
48		**AV0062200R**	122,00
49		**AV0059700R**	150,00
50	4 un		

Placas de accionamiento / Plush plates

Placas Pneumatic One / Placa Pneumatic One

A890166000

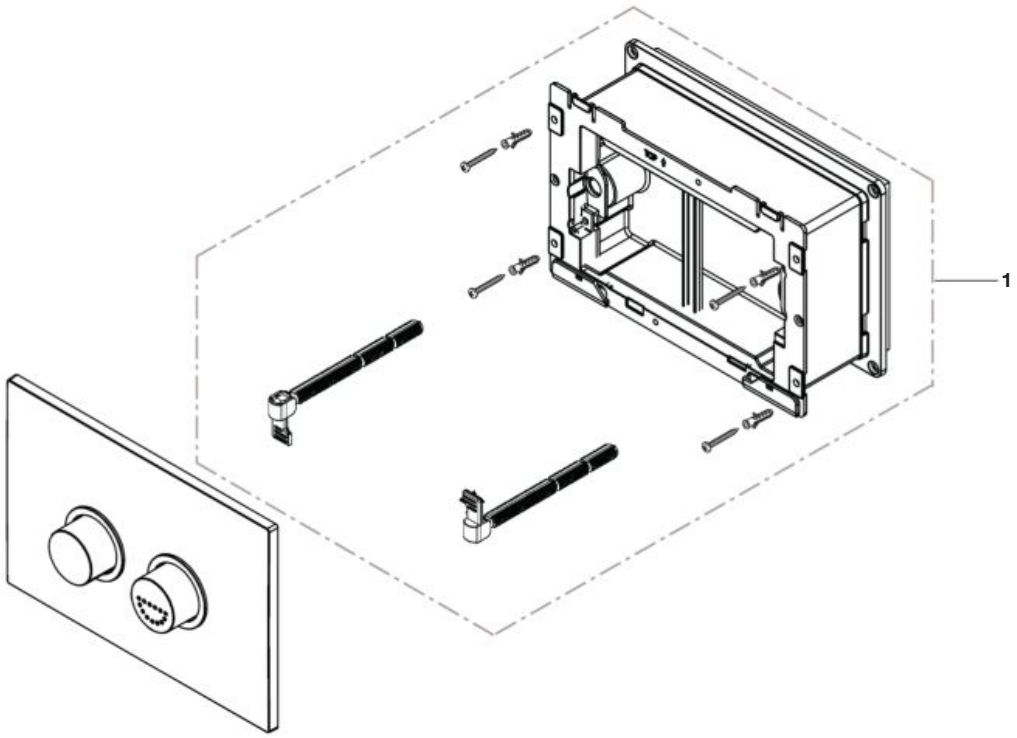

		€
1	**AV0063400R**	9,52

Duplo Retro

Recambios Duplo para productos que utilizan estas placas accionamiento:
Duplo spare parts for finished products that use theese plates:

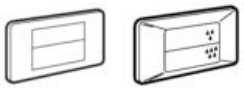

Duplo



		€
A890024000	Guía (necesaria en caso de apoyo a pared) / Guide (necessary for wall leaning)	24,10

Soporte bastidor / Basic frame



		€
A822091001	**Bastidor con juego de fijación y plantilla unión para aparatos suspendidos (taza y bidé)** Frame with fixing kit and joint template for suspended appliances (bowl and bidet)	133,00

Pies auxiliares / Auxiliar stand

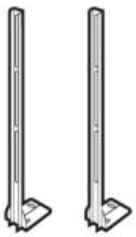

		€
A890005000	Pies para Montage-Set WC y Montage-Set Bidé / Stand for Montage-Set WC and Montage-Set Bidet	49,50

Mecanismos / Mechanisms

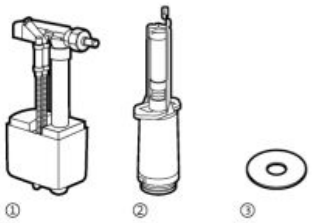

				€
①	**AH0005300R**	Mecanismo de alimentación / Inlet mechanism	**Duplo WC, Montage-Set WC y Tanque empotrable /** Duplo WC, Montage-WC and in-wall Tank Set	52,80
②	**AH0005700R**	Mecanismo de descarga 3/6 litros / 3/6 litres flush mechanism	**Duplo WC, Montage-Set WC y Tanque empotrable /** Duplo WC, Montage-WC and in-wall Tank Set	38,10
②	**A505600207**	Mecanismo de descarga interrumpible /	**Montage-Set WC y Tanque empotrable (modelo antiguo) /** Montage-WC and in-wall Tank (old model)	32,80
③	**AH0016200R**	Junta de cierre mecanismo descarga / Flush mechanism joint	**Duplo WC, Montage-Set WC y Tanque empotrable /** Duplo WC, Montage-WC and in-wall Tank Set	2,16

Duplo Retro

Recambios Duplo Retro para productos que utilizan estas placas accionamiento:
Duplo spare parts for finished products that use theese plates:

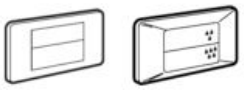

Pernos y varillas / Bolds and rods



			€
AV0021000R	890045...	**Duplo WC, Montage-Set WC y Tanque empotrable 3/6 litros /**Duplo WC, Montage-Set WC and built-in tank 3/6 liters	20,30
A890803000	8900320..	**Duplo WC, Montage-Set WC y Tanque empotrable 3/6 litros /**Duplo WC, Montage-Set WC and built-in tank 3/6 liters Duplo WC, Montage-Set WC and built-in tank 3/6 liters	18,00
A506700114	8900040..	**Montage-Set WC y Tanque empotrable de descarga interrumpible /**Montage-Set WC and Tank recessed discharge interruptible	18,00

	Varillas extralargas	€
A890802000	Duplo WC, Montage-Set WC y tanque empotrable / Duplo WC, Montage-Set WC and built-in tank	30,90

Manguito, tubo con enchufe y embellecedores / Sleeve, tube with plug and trim



		€
AV0012400R	**Para Duplo WC y Montage-Set WC /** For Duplo WC and Montage-Set WC	34,80

Duplo WC, Montage-Set WC y Tanque empotrable / Duplo WC, Montage-Set WC and wall-mounted tank

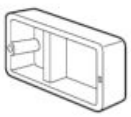

		€
A890807000	**Caja Porex de protección y encaje de plástico /** Porex box for protection and plastic fitting	10,90

Tubo flexible / Flexible tube



		€
A890811000	**Con llave de paso /** With stopcock	14,30

Tubo y juntas / Tube and joints



					€
①	**A890810000**	Tubo descarga **con junta /**Discharge tube with seal	300	Tanque empotrable / Built-in tank	14,70
	A890810100		200	**Duplo, Montage-Set y Tanque empotrable /** Duplo, Montage- Set and built-in tank	14,70
②	**A503358407**	Junta tubo descarga **45 ø /**Discharge tube gasket 45ø			5,39

Puente y balancín / Bridge and lift



			€
①	**A890808000**	**Puente y balancín accionamiento 3/6L /** Bridge and rocker arm drive 3/6L	12,70
②	**AH0005400R**	**Para Duplo WC, Montage-Set WC y Tanque emp. /** For Duplo WC, Montage-Set WC and build-in Tank	66,10

Juego de fijación / Fixation set

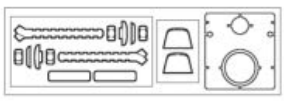

		€
A890033001	**Soporte bastidor para aparatos suspendidos /** Rack support for suspended devices	36,70

Alojamiento pernos roscados / Threaded rods housing



		€
A890813000	**Izquierdo + derecho /** left + right	11,10

Duplo Retro

Recambios Duplo Retro para productos que utilizan estas placas accionamiento:
Duplo spare parts for finished products that use theese plates:

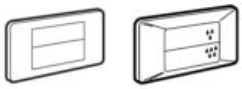

Racords

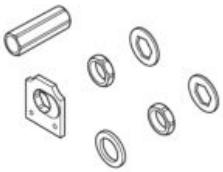

		€
A890815000	Conexiones ajustables a Duplo Bidé / Adjustable connections for Duplo Bidet	50,10

Duplo Bidé y Lavabo / Duplo bidet and washbasin

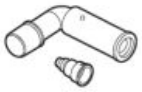

		€
A890814000	Codo de evacuación / Evacuation elbow	33,10

Para Duplo y Montage- Set WC/Bidé / For Duplo and montage-Set WC/Bidet



		€
A890806000	Varillas fijación	8,99

Para Duplo y Montage- Set WC / For Duplo and montage-Set WC



		€
AV0013000R	Codo de evacuación 90x100 / Evacuation elbow 90x100	32,30
A890819000	Codo de evacuación 90x90 / Evacuation elbow 90x90	57,20

Placas de accionamiento / Plush plates

		€
AH0015800R*	Placa accionamiento 3/6L mate 340 x 180 / 3/6L matt 340x180 plush plate	68,80
AH0007300R*	Placa accionamiento 3/6L blanca 340 x 180 / 3/6L white 340x180 plush plate	37,30
A890812000	Tapa plast tanque duplo wc / Duplo wc tank case	13,30

* Placas compatibles para modelos antiguos de 360 x 195 / Com+

Fijaciones directas a pared de taza y bidé suspendidas / Wall-hung WC and bidet fixations

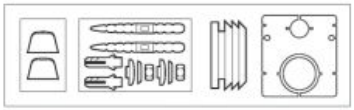

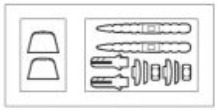

		€
AV0013600R	Juego de fijación, plantilla y enchufe unión para taza / Set fixation, template and bowl connection	14,40
AV0013500R	Juego de fijación y plantilla para bidé / Set fixation and template for bidet	14,40
A890805300	Cto fij/mont bide duplo / Fixation/assembly bidet duplo	12,40

Sólo paredes de grosor mínimo 150, si no se emplea soporte

Placas de accionamiento / Plush plates

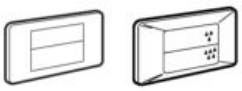

		€
A890045000	Placa accionamiento 3/6L 320 x 170 Blanca / Push plate 3/6L 320 x 170 White	-
A890045001	Placa accionamiento 3/6L 320 x 170 Cromada / Push plate 3/6L 320 x 170 Chrome	-

Compatibilidad recambios con otras series / Spare parts compatibility with other series

		Athena	Cassandra	Icaria	Mitos	Atis	Eos	Teras	Nora	Legacy	In-Wash Aloe	Heracles
AH0001800R	Pulsador corto D2-D4 / Short push button D2-D4	•	•	•	•	•	•	•	•			
AV0007900R	Codo de evacuación vertical distancia a pared a 210 mm / G evacuation u-bend S/Dual 210 mm		•	•			•	•				•
AV0007400R	Fijación taza-tanque / Fixation bowl-cistern				•				•			
AH0001700R	Conjunto pulsador largo varilla roscable para doble descarga D2D / Dual long push button D2D									•	•	•
AV0007700R	Tubo de conexión con longitud ajustable / G U-Bend S/ Dual excent. 60		•	•			•	•		•	•	
AV0007200R	Fijación taza-suelo / Floor fixing CP Vertical				•			•	•			
AH0007100R	Junta cierre D1D y D2D doble pulsador / Flush Diaphragm Washer D1D-D2D		•	•	•	•	•	•	•	•		•
AV0009400R	Juego de fijación a suelo 45 mm para inodoro tanque alto / Bowl Fixing IN	•				•				•		•

Notas / Notes



Precios de venta al público sugeridos. Enero 2026

Roca Sanitario, S.A.U.
Avda. Diagonal 513,
08029 Barcelona, España
roca.es

Línea de atención al cliente
Servicio Técnico
+34 933 661 266